1718 Ex I/O and 1719 Ex I/O modules

Reduce installation, maintenance and inspection costs in hazardous areas with EtherNet/IP distributed I/O

Zin May Thant, Product Marketing Manager, Rockwell Automation
Horst Galm, Product Portfolio Manager, Pepperl+Fuchs

Content

1 Installations in Hazardous Areas

This white paper is addressed to decision makers and professionals responsible for automation systems in hazardous areas. The document describes how using 1718 Ex I/O and 1719 Ex I/O modules can reduce installation, maintenance and inspection costs.

Since a good understanding of explosion protection principles is required, we recommend reviewing the first chapter, which provides an introduction into the physical fundamentals of explosion protection.

1.1 Physical Fundamentals of Explosion Protection

From a chemical point of view, oxidation, combustion and explosion are all exothermic reactions with different reaction speeds. For such reactions to take place it is essential that the following three components be present simultaneously in suitable proportions:

- Fuel: flammable vapors, liquids or gases, or combustible dusts or fibers
- Oxidizer: generally air or oxygen
- Ignition energy: electrical or thermal

These three components are identified in the ignition triangle:

All protection methods used today are based on eliminating one or more of the triangle components to reduce the risk of explosion to an acceptable level. In a properly designed safety system, it is generally acceptable that two or more independent faults must occur, each one of low probability, before a potential explosion can occur.

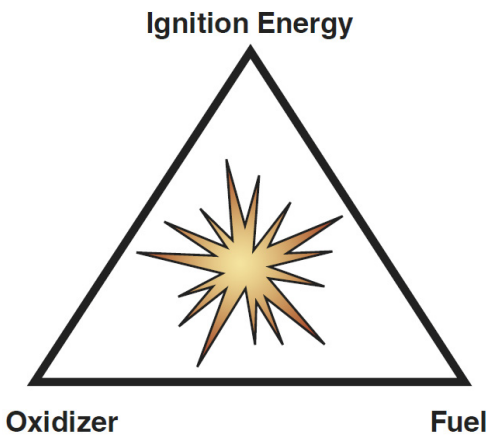

Figure 1: The ignition triangle

Hazardous areas are most frequently found in places where there is a possibility of an emission of flammable gas or dust. An explosive atmosphere can occur in normal operation, if there is a fault, or due to wear and tear of seals or other components. Many areas are designated as hazardous due to the presence of flammable gas. However, the hazard associated with flammable dust is equally significant, since dispersed dust can also lead to explosions.

1.2 Different Categorization Models

We can differentiate between the North American system and the IEC (International Electrotechnical Commission).

1.2.1 Division Model – North American System

Hazardous areas are categorized into three classes depending on the type of flammable material present. The probability of occurrence of these materials determines the further classification into divisions.

	Class I (Gases and vapors)	**Class II (Flammable dust or powder)**	**Class III (Flammable fibers or suspended particles)**
	Locations containing flammable gases, flammable liquid-produced vapors, or combustible liquid produced vapors	Locations containing combustible dusts	Locations containing fibers and flyings
Division 1	Areas ***containing*** dangerous concentrations of flammable ***gases***, ***vapors*** or ***mist*** continuously or occasionally under normal operating conditions	Areas ***containing*** dangerous concentrations of flammable ***dusts*** continuously or occasionally under normal operating conditions	Areas ***containing*** dangerous concentrations of flammable ***fibers*** or ***suspended particles*** continuously or occasionally under normal operating conditions
Division 2	Areas probably ***not containing*** dangerous concentrations of flammable ***gases***, ***vapors*** or ***mist*** under normal operating conditions	Areas probably ***not containing*** dangerous concentrations of flammable ***dusts*** under normal operating conditions	Areas probably ***not containin***g dangerous concentrations of flammable ***fibers*** or ***suspended particles*** under normal operating conditions

1.2.2 Three Zones Model – The European Zone Method

Hazardous areas are classified into zones based on an assessment of the frequency of the occurrence and duration of an explosive gas or dust atmosphere, as follows.

	Gas	**Dust**
Zone 0/20	Zone 0 is an area in which an explosive air/gas mixture is ***continuously present*** or present for long periods.	Zone 20 is an area in which a combustible dust cloud is part of the air ***permanently***, ***over long periods*** of time or frequently.
Zone 1/21	Zone 1 is an area in which an explosive air/gas mixture is likely ***to occur in normal operation***.	Zone 21 is an area in which a combustible dust cloud in the air is likely ***to occur in normal operation***.
Zone 2/22	Zone 2 is an area in which an explosive air/gas mixture is ***unlikely to occur***; but, if it does, only for short periods of time.	Zone 22 is an area in which a combustible dust cloud in the air is ***unlikely to occur*** in normal operation.

1.3 Ignition Protection Methods

When electrical equipment is installed in areas where explosive concentrations and quantities of flammable gases, vapors or dusts can be present in the atmosphere, protective measures are applied to reduce the likelihood of an explosion due to ignition by arcs, sparks or hot surfaces, produced either in normal operation or under specified fault conditions (IEC 60079-14).

To reduce the risk of explosion, elimination of one or more of the ignition triangle components is necessary (Section 1.1). The three basic methods of ignition protection are prevention, segregation and explosion containment:

- **Primary: Prevention of explosive atmosphere**

  AA method that attempts to physically avoid any explosive atmosphere form, such as venting, substitution of flammable substances or extraction.

- **Secondary: Prevention of effective ignition sources**

  A method that separates a potential ignition source from the explosive atmosphere and therefore avoids ignition. This can be done by:

  - Limiting the energy of a potential ignition source, both electrical and thermal, to safe levels under both normal operation and fault conditions. Intrinsic safety is the most representative technique of this method.
  - Separating or isolating electrical parts or hot surfaces from the explosive mixture. This method includes various techniques, such as purge/pressurization, encapsulation, and so on.
  - Confining a potential explosion and avoiding the propagation of it to the surrounding atmosphere. Flameproof and explosion proof enclosures are based on this method.

- **Tertiary: Constructionary explosion protection where the effects of an explosion are controlled**

  Examples include flame arresters, bursting discs, quick-acting shut-off valves, or even explosion suppression systems.

1.4 Types of Protection

Increased Safety "Ex e"

This protection method is based on the segregation concept.

Measures must be applied to the electrical apparatus to reduce, with an elevated safety coefficient, the possibility of excessive temperature or arc or spark generation inside and outside the apparatus during normal operation.

Under normal operation, an increased degree of safety is achieved with design parameters such as: increased air and creepage distances, degrees of protection to be observed, tensile strength of terminal connections and cable glands, minimum cross sections, mechanical strengths, and isolation properties of the winding wire.

Ignition protection type	Abbreviation	Region	Used in
Increased safety	AEx e Ex e Ex e	USA Canada IEC	Class I, Zone 1 Class I, Zone 1 Zone 1

Non-sparking Ex ec (former Ex nA)

The operation is based on the assumption that, under normal conditions, the equipment is not producing any arcs or sparks.

This means that there is no source of ignition due to hot surfaces and sparks that are electrically or mechanically generated.

Ignition protection type	Abbreviation	Region	Used in
Non-sparking	AEx ec (former AEx nA)	USA	Class I, Zone 2
	Ex nA	Canada	Class I, Zone 2
	Ex ec (former Ex nA)	IEC	Zone 2
	NI*	USA	Class I, Div. 2
	NI*	Canada	Class I, Div. 2
*NI means non-incendive			

Intrinsic Safety "Ex i"

Intrinsic safety is based on the principle of preventing an effective ignition source. The electrical energy is limited to a level that cannot ignite a gas from the gas group within the installation location. The intrinsic safety of an electrical circuit is achieved by limiting current, voltage, power, and temperature. Therefore, intrinsic safety is limited to circuits that have relatively low levels of power. In normal operation and in the event of a fault, no sparks or thermal effects can occur that could lead to the ignition of a potentially explosive atmosphere. Intrinsically safe circuits can therefore be connected and disconnected by experts during maintenance (hot plugging), as they are guaranteed[1] to be safe in the event of a short circuit or disconnection. Intrinsic safety is an ignition protection class that allows connectors to be opened and intrinsically safe apparatus to be removed and replaced by an equivalent device in a hazardous area.

[1] *Dependent on user application of product installation instructions.*

Ignition protection type	Abbreviation	Region	Used in
Intrinsically safe	IS	USA	Class I, Div. 1
	IS	Canada	Class I, Div. 1
	AEx ia	USA	Class I, Zone 0
	AEx ib	USA	Class I, Zone 1
	Ex ia	Canada	Class I, Zone 0
	Ex ib	Canada	Class I, Zone 1
	Ex ia	IEC	Zone 0
	Ex i	IEC	Zone 1

The advantage of intrinsic safety is that live maintenance without a hot work permit is allowed, but the limited power sometimes limits the cable length due to energy storing components.

With 1719 Ex I/O modules, the intrinsically safe circuits that limit the energy are built into the modules, separating the incoming signals from the hazardous area. Therefore, signals, power, and so on, transmitted into a hazardous area do not necessarily have to be intrinsically safe.

2 Intrinsically Safe Distributed I/O

2.1 1719 Ex I/O Modules

2.1.1 Product Description

1719 Ex I/O modules are signal conditioning devices with integrated Intrinsic Safety (I.S.) barriers to interface signals from field devices in the hazardous area (Class I, Div. 1 or Zone 1/0) with controllers or process control systems in the safe area. The 1719 Ex I/O modules can be mounted in the safe area or in a Zone 2/Class I, Div. 2 area.

The field signals from a hazardous area are conditioned and transferred to the 1719 Ex I/O EtherNet/IP™ adapter, 1719-AENTR, via the backplane.

The slots for the I/O modules on the backplane have equal status, meaning different I/O modules can be mixed and matched on the backplane.

The 1719 Ex I/O EtherNet/IP adapter collects all conditioned signals from the I/O modules and provides them to a controller via EtherNet/IP.

Power supply modules provide power to the I/O modules and the adapter on a backplane. The slots for the adapter are mechanically coded on the backplane and marked accordingly.

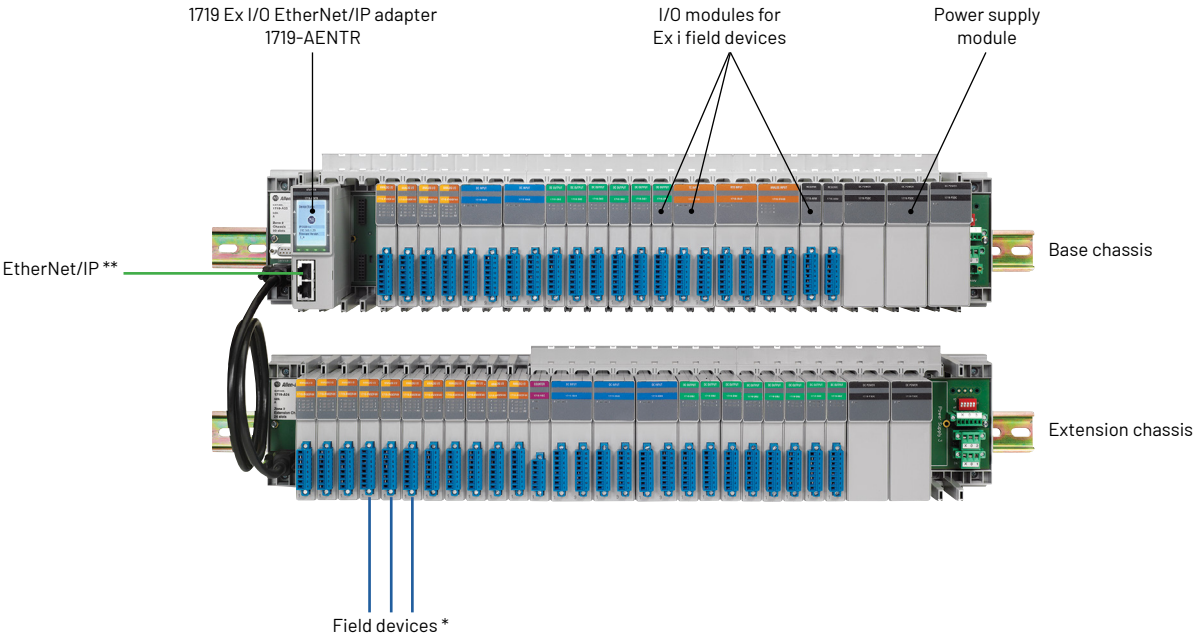

Figure 2: 1719 Ex I/O modules overview

** Intrinsically safe cable limits are calculated in accordance with IEC 60079-14 (worldwide), NFPA70 (National Electrical Code (NEC) for US) and CSA C22.1 (Canadian Electrical Code (CEC) for Canada). Maximum length of cable to be connected to the barrier is the length specified by the barrier manufacturer or calculated from the following formulas:*
Length (ft) = Ca / 60 pF and Length (ft) = La / 0.2 µH
Ca and La are the capacitance and the inductance parameters, respectively, specified by the barrier manufacturer. The specified maximum length is the lesser of the two calculated values.

*** The maximum cable length for EtherNet/IP is 100 m.*

2.1.2 Zone 2/Class I, Div. 2 Mounting and Zone 22/Class II, Div. 2 Mounting

1719 Ex I/O modules are suitable for Zone 2/Class I, Div. 2 gas hazardous area mounting and carry a Zone 2/Class I, Div. 2 approval. For dust hazardous area mounting, Zone 22/Class II, Div. 2, special cabinet specifications must be met. The enclosure must be protected against falling dirt, circulating dust and windblown dust. This enclosure type is tested and certified for this in accordance with UL50E Type 3, 3S, 3X, 4, or 4X.

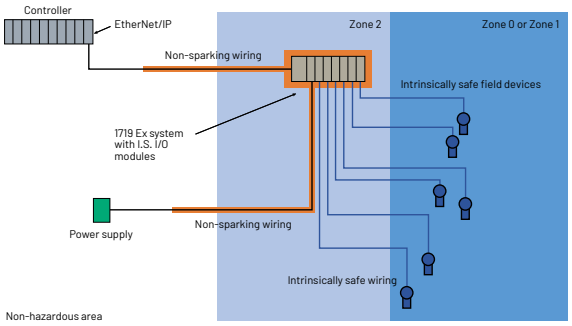

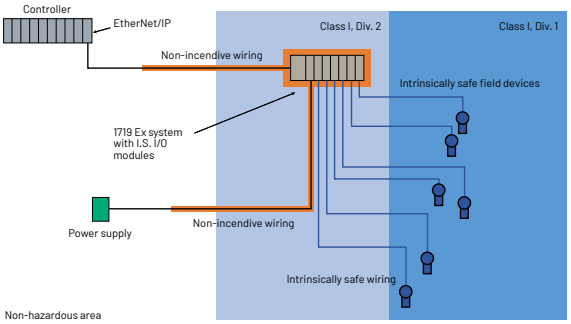

Zone 2

Non-IS cable or 24V power supply cable is passed through the hazardous area.

- Cable for intrinsically safe circuits must be protected in accordance with IEC 60079-14 against mechanical damaging, chemical influences, corrosion, effects of heat, and UV radiation.
- The cables for Ethernet and power supply are designed non-sparking (IEC 60079-15). RJ45 connectors fulfill Zone 2 mounting requirements because they do not disconnect without manual intervention. That is, they are latched. Therefore, the Ethernet network and power supply are not intrinsically safe, and hot-swap or connecting/disconnecting in hazardous areas under voltage is not allowed. Hot work permit is required for maintenance on non-intrinsically safe circuits such as the Ethernet and power supply cables.
- The cable for intrinsically safe circuits must be installed separately from non-intrinsically safe circuits and clearly marked, for example, in light blue color. In case non-armored cables are used, they must mount in an appropriate cable channel or cable tray.
- Responsibility for safe installation technology is given to the owner of the plant. National laws and customer-specific installation requirements should be considered.
- When performing maintenance, it is important to make sure that no ignitable mixture is present in the area. For example, a gas sniffer can be used to ensure that the area is non-hazardous at the time of maintenance.
- 1719 Ex I/O module connectors must fulfill the installation requirements. Typically, Ex ec and Ex nA increased safety are appropriate for Zone 2/ Class I, Div. 2.

Class I, Div. 2

National Electrical Code (NEC) (ANSI/NFPA 70) Section 504 addresses intrinsically safe systems. The relevant subsections and their corresponding installation guidelines are as follows:

- NEC 504-30 -> Spacing of conductors
- NEC 504-50 -> Grounding
- NEC 504-60 -> Bonding
- NEC 504-70 -> Sealing
- NEC 504-80 -> Identification
- The RJ45 connectors on the EtherNet/IP adapter fulfill Class I, Div. 2 mounting requirements because they do not disconnect without manual intervention. That is, they are latched.
- Ethernet network and power supply, and corresponding cables, are not intrinsically safe. Therefore, hot-swap or connecting/disconnecting in hazardous areas under voltage is not allowed.

The enclosure should only be opened for installation and maintenance purposes.

- Connection or disconnection of energized non-intrinsically safe circuits is only permitted in the absence of a hazardous area.
- When connected to the power supply, non-intrinsically safe connections must not be connected or disconnected unless a hot work permit is on record for the installation.
- Intrinsically safe current circuits can be connected or disconnected at any time.

2.2 1718 Ex I/O Modules

2.2.1 Product Description

1718 Ex I/O modules are signal conditioning devices with integrated Intrinsic Safety (I.S.) barriers to interface signals from field devices in the hazardous area (Zone 1/0) with controllers or process control systems in the safe area. The 1718 Ex I/O modules can be mounted in a Zone 1 area.

The field signals from a hazardous area are conditioned and transferred to the 1718 Ex I/O EtherNet/IP adapter, 1718-AENTR, via the backplane.

The slots for the I/O modules on the backplane have equal status, meaning different I/O modules can be mixed and matched on the backplane.

The 1718 Ex I/O EtherNet/IP adapter collects all conditioned signals from the I/O modules and provides them to a controller via EtherNet/IP.

Power supply modules provide power to the I/O modules and the adapter on a backplane. The slots for the adapter are mechanically coded on the backplane and marked accordingly.

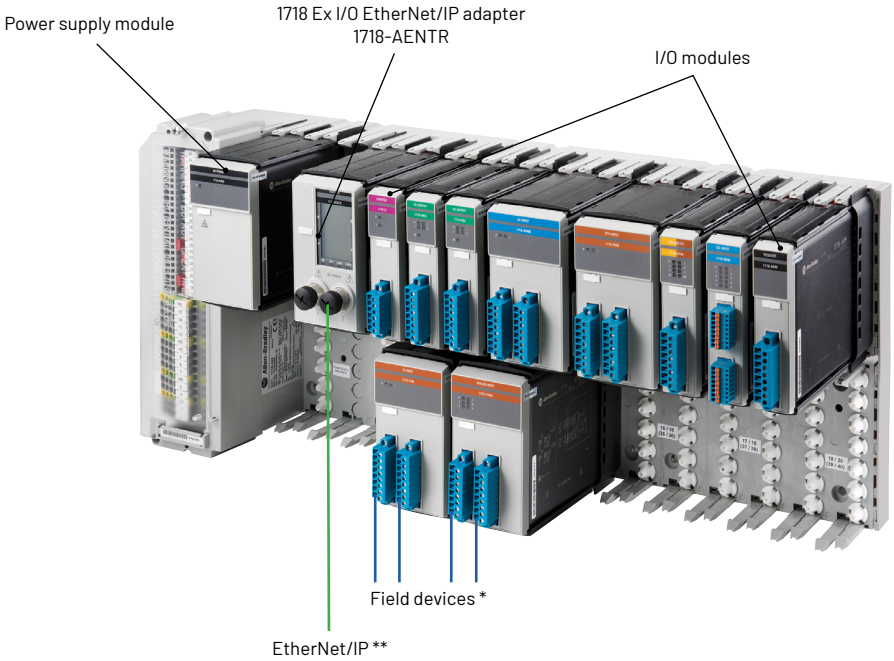

Figure 3: 1718 Ex I/O modules overview

** Intrinsically safe cable limits are calculated in accordance with IEC 60079-14 (worldwide), NFPA70 (National Electrical Code (NEC) for US) and CSA C22.1 (Canadian Electrical Code (CEC) for Canada). Maximum length of cable to be connected to the barrier is the length specified by the barrier manufacturer or calculated from the following formulas:*
Length (ft) = Ca / 60 pF and Length (ft) = La / 0.2 µH
Ca and La are the capacitance and the inductance parameters, respectively, specified by the barrier manufacturer. The specified maximum length is the lesser of the two calculated values.

*** The maximum cable length for EtherNet/IP is 100 m.*

2.2.2 Zone 1 Mounting and Zone 21 Mounting

1718 Ex I/O modules are suitable for Zone 1 gas hazardous area mounting and carry a Zone 1 approval. The 1718 Ex I/O system can be mounted in a Zone 1 environment when mounted in Zone 1 certified enclosures.

For dust hazardous area mounting (Zone 21), an enclosure with a minimum IP degree of IP54 (non-conducting dust) or IP65 (conducting dust) protection approved for Zone 21 as per EN 60529 must be used to house 1718 Ex I/O modules. The enclosure must be certified together with the chassis, adapter, power supplies, and accessories. Pepperl+Fuchs, our PartnerNetwork™ Technology partner, offers six enclosures suitable for mounting the 1718 Ex I/O system in a Zone 1 gas hazardous and Zone 21 dust hazardous area.

For more information about these specific enclosures, reference 1718 Ex I/O PartnerNetwork Enclosure Solutions from Pepperl+Fuchs.

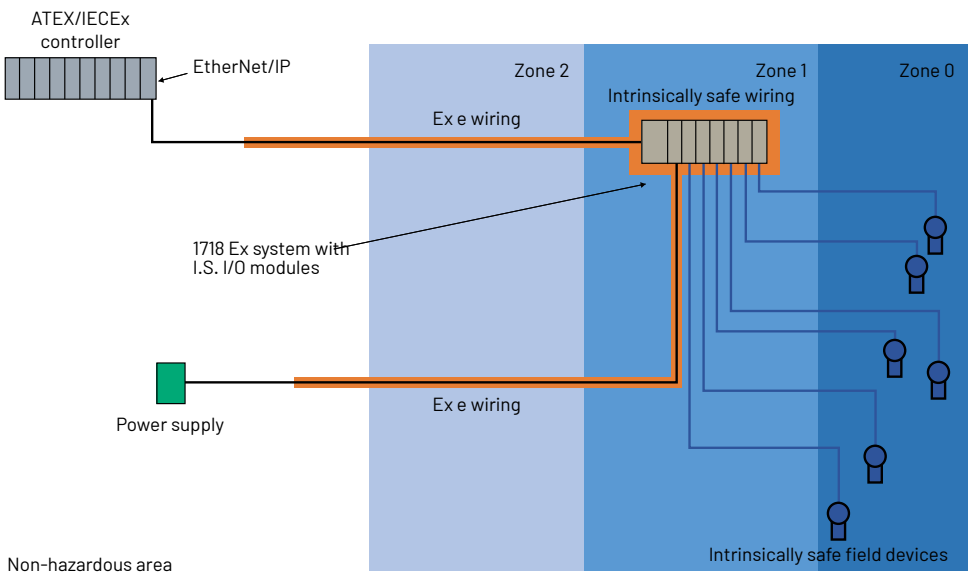

Zone 1

- Cable for intrinsically safe circuits must be protected in accordance with IEC 60079-14 against mechanical damaging, chemical influences, corrosion, effects of heat, and UV radiation.
- Hot work permit is required for maintenance on non-intrinsically safe circuits such as the Ethernet and power supply cables.
- The cable for intrinsically safe circuits must be installed separately from non-intrinsically safe circuits and clearly marked, for example, in light blue color.
- The I/O modules can be connected and disconnected under voltage during operation of the system (hot swappable operation). The I/O module signal connections also can be disconnected and connected. But, not for the EtherNet/IP adapter because the bus connection is Ex e, not Ex i.
- The power connections of the power supply units also must not be plugged and unplugged, since they are also Ex e, Ex i.
- Responsibility for safe installation technology is given to the owner of the plant. National laws and customer-specific requirements should be considered.
- When performing maintenance on the bus or power supply, it is important to make sure that no ignitable mixture is present in the area. For example, a gas sniffer can be used to ensure that the area is non-hazardous at the time of maintenance.

For installations in gas or dust areas, the devices must be installed in an additional IP54 enclosure.

2.3 Wiring

2.3.1 Protected Wiring

IEC 60079-14 allows:

- Thermoplastic sheathed cables
- Thermosetting sheathed cables
- Elastomeric sheathed cables
- Mineral insulated metal sheathed cables (armored cables)

Outside the enclosure, IEC 60079-14 applies also for lamps, Ex d field devices, motors, and frequency converters.

Cables are resistant to flame propagation. In addition, the surface temperature of the cable does not exceed that of the temperature class of the installation. Wiring must be protected from damage including mechanical, vibration, environmental factors, and ambient temperatures.

NFPA 70 / NEC Section 501

The National Electrical Code (NEC) and the Canadian Electrical Code (CEC) define hazardous areas as the following: An area where a potential hazard such as a fire, an explosion, and so on, can exist under normal or abnormal conditions because of the presence of flammable gases or vapors, combustible dusts, or ignitable fibers or flyings.

Article 501 of the NEC provides the requirements for Class I hazardous locations. The locations are segmented into divisions based on the concentrations of gas present and the expected frequency of having this hazardous area. If gas is normally present in ignitable concentrations, this is classified as a Class I, Division 1 location. If gas is only present under abnormal or fault conditions, this is classified as a Class I, Division 2 area. The Class I, Division 2 area has less stringent wiring requirements due to the lack of a hazardous atmosphere presence under normal conditions.

In Class I, Division 2 locations, the following wiring methods are permitted:

1. All wiring methods permitted in 501.10(A): Wiring for Class I Division 1.
2. Enclosed, gasketed busways and enclosed, gasketed wireways.
3. Type PLTC and Type PLTC-ER cable in accordance with Article 725 provisions, including installation in cable tray systems. The cable must be ended with listed fittings.

4. Type ITC and Type ITC-ER cable as permitted in Section 727.4 and ended with listed fittings.

    a. Type ITC cable can be used in some of the following industrial applications where the installation and maintenance are only performed by qualified persons. Under these conditions, the ITC cable is permitted for use in cable trays and raceways in hazardous locations as allowed per the applicable NEC section, and enclosed in a smooth metallic sheath, continuous corrugated metallic sheath, or interlocking tape armor applied over the nonmetallic sheath. The cable must be supported and secured at intervals not exceeding 1.8 m (6 ft).

    b. Cable, without a metallic sheath or armor, which complies with the crush and impact requirements of Type MC cable and is identified for such use with the marking ITC-ER is permitted to be installed exposed. The cable is continuously supported and protected against physical damage using mechanical protection such as dedicated struts, angles, or channels. The cable is secured at intervals not exceeding 1.8 m (6 ft).

5. Type MC, MV, TC, or TC-ER cable, including installation in cable tray systems. The cable must be ended with listed fittings.

6. In industrial establishments with restricted public access, where the conditions of maintenance and supervision ensure that only qualified individuals take care of the installation, and where metallic conduit does not provide sufficient corrosion resistance, listed reinforced thermosetting resin conduit (RTRC), factory elbows, and associated fittings, all marked with the suffix -XW, and Schedule 80 PVC conduit, factory elbows, and associated fittings shall be permitted.

    Where seals are required for boundary conditions as defined in 501.15(A)(4), the Division 1 wiring method extends into the Division 2 area to the seal, which is on the Division 2 side of the Division 1–Division 2 boundary.

7. Optical fiber cable types are permitted to be installed in cable trays or any other raceway in accordance with 501.10(B). Optical fiber cables are sealed in accordance with 501.15.

2.3.2 Frequently Asked Questions

Do the 1719 Ex I/O module connectors meet the Zone 2/Class I, Div. 2 mounting requirement?

Yes, RJ45 connectors fulfill Zone 2/Class I, Div. 2 mounting requirements because they do not disconnect without manual intervention (latched).

Do the 1718 Ex I/O module connectors meet the Zone 1 mounting requirement?

Yes, the M12 connectors fulfill Zone 1 mounting requirements because they do not disconnect without manual intervention (latched).

How are cable length limits determined?

Protected wiring does not have any cable length limits. Since the protected cable is considered to contain the energy, no length-dependent capacity or inductivity must be considered to limit any energies. This is applicable for both 1719 Ex I/O and 1718 Ex I/O.

What are the implications for wiring distance (especially >100 m) for 1719 Ex I/O modules?

Ethernet communication does not allow for cable length greater than 100 m due to IEEE802.3 restrictions. However, suitable Ethernet switches with the appropriate approvals for Zone 2/Class I, Div. 2 mounting can be used to extend the Ethernet cable length beyond 100 m. See Section 2.5.1 for more information.

What are the implications for wiring distance (especially >100 m) for 1718 Ex I/O modules?

Ethernet communication does not allow for cable length greater than 100 m due to IEEE802.3 restrictions.

2.4 Overview of Possible Sheath Materials

Examples of thermoplastic materials		Examples of thermosetting materials	Examples of elastomeric materials
Acrylonitrile butadiene styrene (ABS)	Polycyclohexylene dimethylene terephthalate (PCT)	Natural rubber	Rubber
Acrylic	Polycarbonate (PC)	Bakelite - a phenol formaldehyde resin (used in electrical insulators and plastic wear)	Buna rubber
Celluloid	Polyketone (PK)		Silicone RTV
Cellulose acetate	Polyester		Viton
Ethylene vinyl alcohol (EI VAL)	Polyethylene/ PolythenelPolyethene	Urea-formaldehyde foam (used in plywood, particleboard and medium-density fiberboard)	Neoprene
Fluoroplastics (PTFEs, including FEP, PFA, CTFE, ECTFE, ETFE)	Polyetheretherketone (PEEK)		Santoprene
Ionomers	Polyetherimide (PEI)	Polyester resin (used in glass-reinforced plastics)/ fiberglass (GRP)	Fluorosilicone rubber
Liquid crystal polymer (LCP)	Polyethersulfone (PES) - see Polysulfone		EPDM rubber
Polyacetal (POM or Acetal)	Polyethylenechlorinates (PEC)	Epoxy resin (used as an adhesive and in fiber-reinforced plastics such as glass-reinforced plastic and graphite-reinforced plastic)	Polyurethane rubber (PUR)
Polyacrylates (Acrylic)	Polyimide (PI)		Nitrile rubber
Polyacrylonitrile (PAN or Acrylonitrile)	Polymethylpentene (PMP)		Resilin
Polyamide (PA or Nylon)	Polyphenylene oxide (PPO)	Melamine (used on worktop surfaces)	
Polyamide-imide (PAI)	Polyphenylene sulfide (PPS)		
Polyaryletherketone (PAEK or Ketone)	Polyphthalamide (PPA)		
Polybutadiene (PBD)	Polypropylene (PP)		
Polybutylene (PB)	Polystyrene (PS)		
Polybutylene teraphthalate (PBT)	Polysulfone (PSU)		
Polyethylene terephthalate (PET)	Polyvinyl chloride (PVC)		

2.5 Ethernet Installation in Hazardous Areas

2.5.1 Running EtherNet/IP™ Longer Than 100 m with 1719 Ex I/O Modules

Ethernet communication does not allow for a copper cable length greater than 100 m due to IEEE802.3 restrictions. However, suitable Ethernet switches with the appropriate approvals for Zone 2/Class I, Div. 2 mounting can be used to extend the Ethernet cable length beyond 100 m. Our recommended solution for applications that require an Ethernet cable length greater than 100 m is to use an Allen-Bradley® Stratix® EtherNet/IP tap (ETAP), 1783-ETAP2F. This ETAP has 1 copper port and 2 fiber ports. As a result, the ETAP allows 1719 Ex I/O modules to be used with a fiber cable, which can be run longer than 100 m, and supports Device Level Ring (DLR) topology. Furthermore, the Stratix 1783-ETAP2F is rated for Zone 2/Class I, Div. 2 mounting and as such can be placed in the cabinet with 1719 Ex I/O modules.

For additional information on the Stratix EtherNet/IP tap, 1783-ETAP2F, reference Stratix Ethernet Device Specifications Technical Data.

2.5.2 Intrinsically Safe Ethernet

Because 1719 Ex I/O modules contain an intrinsically safe isolation, the EtherNet/IP signal being connected to the 1719 Ex I/O chassis does not necessarily have to be intrinsically safe. In most circumstances, non-intrinsically safe Ethernet cabling can be used. There are specific cases when intrinsically safe Ethernet is preferred or required:

1. The customer specifies or prefers to use intrinsically safe Ethernet.
2. The installation requires the Ethernet cable to cross a Zone 1/Class I, Div. 1 area.
3. The application requires live maintenance on the Ethernet cable without gas clearance.

Typically, maintenance staff will sniff an area to make sure it is safe before they start working in it. To "sniff an area" means to use a gas detector to confirm that there is no ignitable mixture present at the time maintenance staff is working in the area. Intrinsically safe Ethernet provides an added layer of protection for personnel and equipment in hazardous areas. However, this additional protection is with added cost. Note, it is optional to use intrinsically safe Ethernet with 1719 Ex I/O modules but, in most circumstances, it is not required.

.

2.5.2.1 Ethernet Isolator for I.S. Ethernet Transmission

An Ethernet isolator is an intrinsically safe Ethernet solution that is well suited for applications where frequent disconnection of the Ethernet cable in a hazardous area is required, such as:

- mobile machinery and equipment in harsh environments
- assemblies that are often removed, replaced or reworked
- applications in which cable breakage is a risk

The intrinsically safe energy limitation eliminates any need for protected installation.

Intrinsically safe Ethernet can be connected and disconnected during normal plant operation without requiring a hot work permit.

The galvanic isolation eliminates the need for equipotential bonding between the safe area and the hazardous area.

Technology partner Pepperl+Fuchs offers an Ethernet isolator that can be installed within the safe area and the Zone 2 hazardous area, with no Div. 2 approval. As an associated apparatus, it is certified to lead intrinsically safe instrumentation into Zone 0 and Zone 1 hazardous areas. It is a one-to-one data connector with automatic speed detection. Data is passed through without buffering.

2.5.2.2 Typical Application with an Ethernet Isolator

Figure 4 shows the typical usage of Ethernet isolators within an Ethernet network. Using standard Ethernet cable and hardware, an intrinsically safe connection, up to 100 m length can be established to connect the hazardous area and the network in the safe area. It is also a fast and easy way to bridge the Ethernet network through a Zone 0 or Zone 1 hazardous area. One Ethernet isolator is required at each end of the intrinsically safe cable. The Ethernet isolator requires a 24V DC power supply.

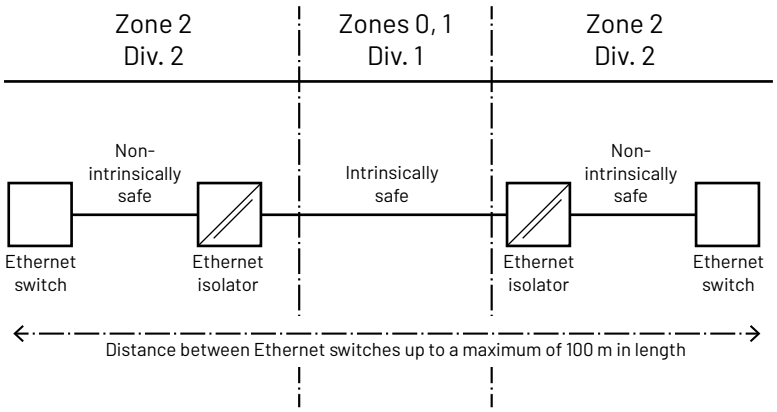

Figure 4: Typical usage of Ethernet isolators

2.5.3 Frequently Asked Questions

If I.S. EtherNet/IP is preferred, does this have any impact to the system or Device Level Ring (DLR)?

No, this does not have any impact to the system or topology.

If I.S. EtherNet/IP is required or preferred, what are the additional considerations regarding wiring costs and additional isolator hardware?

The wiring costs with or without I.S EtherNet/IP are similar. The additional hardware required is two Ethernet isolators per connection. Additionally, the isolators require 24V DC power.

What is the maximum cable length possible with Ethernet?

Ethernet communication does not allow for cable lengths greater than 100 m due to IEEE802.3 restrictions. However, the suitable Ethernet switches with the appropriate certifications can be used to extend the Ethernet cable length beyond 100 m. See Section 2.5.1

Is the 100 m limitation consistent for non-I.S. EtherNet/IP and I.S. EtherNet/IP?

The length restrictions per IEEE802.3 are the same for non-I.S. and I.S. EtherNet/IP.

Are there any differences if the repeater or switch is mounted in the enclosure versus outside the enclosure?

Third-party Ethernet switches exist, and it is recommended that the user follows the installation instructions for the selected product. It is recommended to mount the switch in the 1719 Ex I/O enclosure to avoid the need for an additional cabinet. This installation method helps to ensure that the hazardous area rating of the selected switch corresponds to the application requirement. For a list of switches available from Rockwell Automation visit:
https://www.rockwellautomation.com/en-us/products/hardware/allen-bradley/network-security-and-infrastructure/ethernet-networks.html

Learn more about 1719 Ex I/O modules

Learn more about 1718 Ex I/O modules

Connect with us.

rockwellautomation.com — expanding **human possibility**®

AMERICAS: Rockwell Automation, 1201 South Second Street, Milwaukee, WI 53204-2496 USA, Tel: (1) 414.382.2000, Fax: (1) 414.382.4444
EUROPE/MIDDLE EAST/AFRICA: Rockwell Automation NV, Pegasus Park, De Kleetlaan 12a, 1831 Diegem, Belgium, Tel: (32) 2 663 0600, Fax: (32) 2 663 0640
ASIA PACIFIC: Rockwell Automation, Level 14, Core F, Cyberport 3, 100 Cyberport Road, Hong Kong, Tel: (852) 2887 4788, Fax: (852) 2508 1846

Publication 1719-WP001B-EN-P - March 2022 | Supersedes Publication 1719-WP001A-EN-P – June 2017