1442 Eddy Current Probe System

Allen-Bradley
by ROCKWELL AUTOMATION

User Manual

Original Instructions

Important User Information

Read this document and the documents listed in the additional resources section about installation, configuration, and operation of this equipment before you install, configure, operate, or maintain this product. Users are required to familiarize themselves with installation and wiring instructions in addition to requirements of all applicable codes, laws, and standards.

Activities including installation, adjustments, putting into service, use, assembly, disassembly, and maintenance are required to be carried out by suitably trained personnel in accordance with applicable code of practice.

If this equipment is used in a manner not specified by the manufacturer, the protection provided by the equipment may be impaired.

In no event will Rockwell Automation, Inc. be responsible or liable for indirect or consequential damages resulting from the use or application of this equipment.

The examples and diagrams in this manual are included solely for illustrative purposes. Because of the many variables and requirements associated with any particular installation, Rockwell Automation, Inc. cannot assume responsibility or liability for actual use based on the examples and diagrams.

No patent liability is assumed by Rockwell Automation, Inc. with respect to use of information, circuits, equipment, or software described in this manual.

Reproduction of the contents of this manual, in whole or in part, without written permission of Rockwell Automation, Inc., is prohibited.

Throughout this manual, when necessary, we use notes to make you aware of safety considerations.

WARNING: Identifies information about practices or circumstances that can cause an explosion in a hazardous environment, which may lead to personal injury or death, property damage, or economic loss.

ATTENTION: Identifies information about practices or circumstances that can lead to personal injury or death, property damage, or economic loss. Attentions help you identify a hazard, avoid a hazard, and recognize the consequence.

IMPORTANT Identifies information that is critical for successful application and understanding of the product.

These labels may also be on or inside the equipment to provide specific precautions.

SHOCK HAZARD: Labels may be on or inside the equipment, for example, a drive or motor, to alert people that dangerous voltage may be present.

BURN HAZARD: Labels may be on or inside the equipment, for example, a drive or motor, to alert people that surfaces may reach dangerous temperatures.

ARC FLASH HAZARD: Labels may be on or inside the equipment, for example, a motor control center, to alert people to potential Arc Flash. Arc Flash will cause severe injury or death. Wear proper Personal Protective Equipment (PPE). Follow ALL Regulatory requirements for safe work practices and for Personal Protective Equipment (PPE).

The following icon may appear in the text of this document.

Identifies information that is useful and can help to make a process easier to do or easier to understand.

About This Publication

This manual describes how to use the 1442 Series Eddy Current Probe System.

The 1442 Eddy Current Probe System performs non-contact measurement of the distance between the probe and the measured object (target), and outputs a proportional voltage signal. The static component of the measurement is the "gap," the absolute (DC) distance from the target surface to the probe tip. The dynamic component of the measurement is the "vibration," the cyclical (AC) movement of the target towards and away from the probe.

By combining this system with an Allen-Bradley® 1440 or 1444 Series measurement module, you can measure the vibration of a rotating shaft, its eccentricity, thrust position, and rotating speed. The system is used for continuous measurement or monitoring of shafts rotating at high speeds, such as turbines, generators, and compressors.

Download Firmware, AOP, EDS, and Other Files

Download firmware, associated files (such as AOP, EDS, and DTM), and access product release notes from the Product Compatibility and Download Center at rok.auto/pcdc.

Summary of Changes

This publication contains the following new or updated information. This list includes substantive updates only and is not intended to reflect all changes.

Topic	Page
Migrated installation content to 1442 Eddy Current Probe Systems Installation Instructions, publication 1442-IN001	Throughout
Updated Static Characteristic Effect by Target Material to include additional standards	25

Measurement Principles

The gap between the probe and the target is found according to the following principles:

- When an approximately 1 MHz high frequency current is supplied from the oscillator to the probe, a high frequency magnetic field is created at the probe tip.
- The inter-linkage of the high frequency magnetic flux on the target induces an eddy current that flows on the target surface.
- When the eddy current flows on the target surface, a magnetic field is created at the target side, and the probe impedance changes.
- When this change in output of the oscillator is detected, the distance versus output voltage is made linear by a linearizer circuit, and the result is output.

You can find the gap between the probe and the target by measuring the probe impedance if the following relationships are identified:

- Relationship between the probe and the target gap.
- Relationship of the probe impedance.

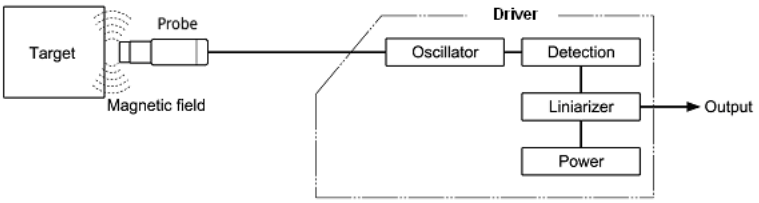

System Configuration Example

This system is designed to fulfill the specifications when used under the following configuration.

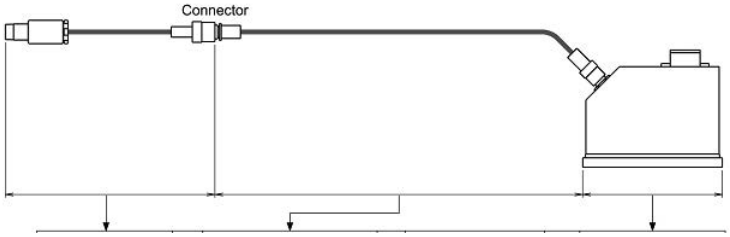

Probe		Extension Cable		System Cable		Driver[1]
0.5 m (1.64 ft)	+	4.5 m (14.76 ft)	=	5.0 m (16.40 ft)	→	1442-DR-*xx*50
1.0 m (3.28 ft)	+	4.0 m (13.12 ft)	=	5.0 m (16.40 ft)	→	1442-DR-*xx*50
0.5 m (1.64 ft)	+	8.5 m (27.89 ft)	=	9.0 m (29.53 ft)	→	1442-DR-*xx*90
1.0 m (3.28 ft)	+	8.0 m (26.25 ft)	=	9.0 m (29.53 ft)	→	1442-DR-*xx*90

(1) Where *xx* = appropriate code for probe size.

IMPORTANT Combine the components of the system (probe, extension cable, and driver) as shown in this example. If the system is not configured as shown, or if the 1442 extension cable is not used to combine the 1442 probe and driver, the output characteristics differ significantly.

Additional Resources

These documents contain additional information concerning related products from Rockwell Automation. You can view or download publications at rok.auto/literature.

Resource	Description
1442 Eddy Probe Systems Installation Instructions, publication 1442-IN001	Provides information about how to install the components in a 1442 Eddy probe system.
1442 Eddy Current Probe Systems Specifications Technical Data, publication 1442-TD001	Provides specifications for the 1442 Eddy Current Probe System.
Industrial Components Preventive Maintenance, Enclosures, and Contact Ratings Specifications, publication IC-TD002	Provides a quick reference tool for Allen-Bradley industrial automation controls and assemblies.
Industrial Automation Wiring and Grounding Guidelines, publication 1770-4.1	Provides general guidelines for installing a Rockwell Automation industrial system.
Product Certifications website, rok.auto/certifications.	Provides declarations of conformity, certificates, and other certification details.

Notes:

System Overview

This chapter describes the individual components of the 1442 Eddy Current Probe System.

System Components

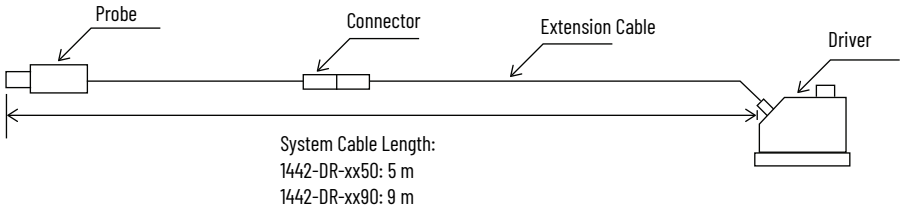

1442 Probe Outer Dimensions and Part Nomenclature

5 mm Probes

5 mm Probe - Not Armored

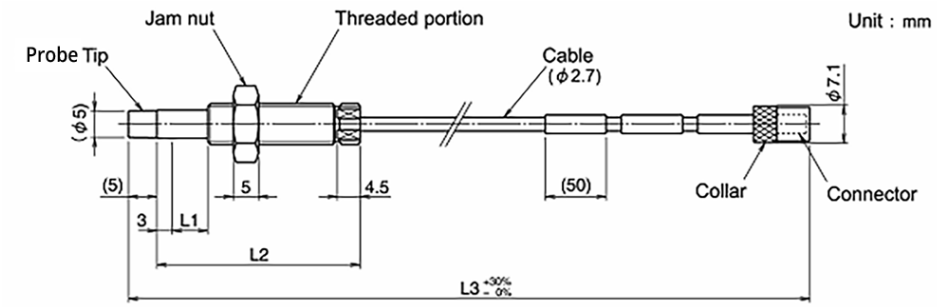

5 mm Probe - Armored

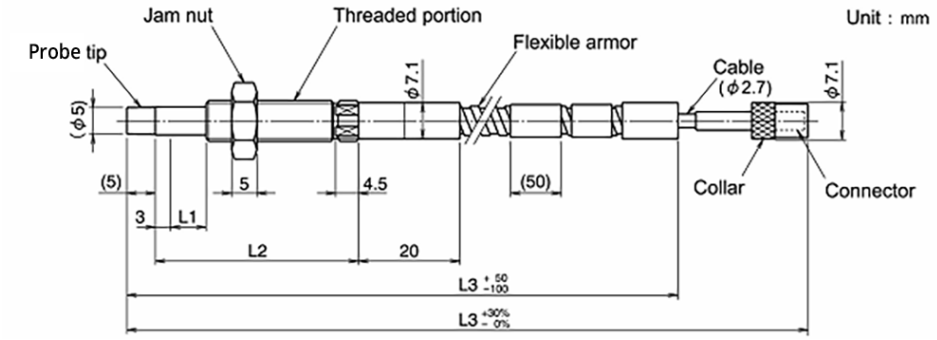

L1	Unthreaded length
L2	Case length
L3	Cable length

8 mm Probes

8 mm Probe - Not Armored

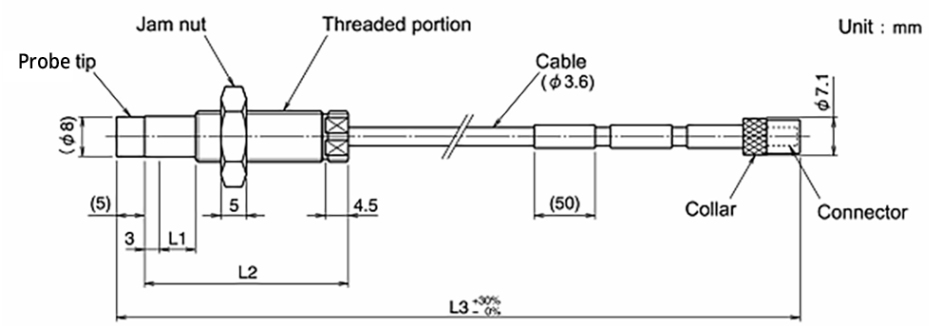

8 mm Probe - Armored

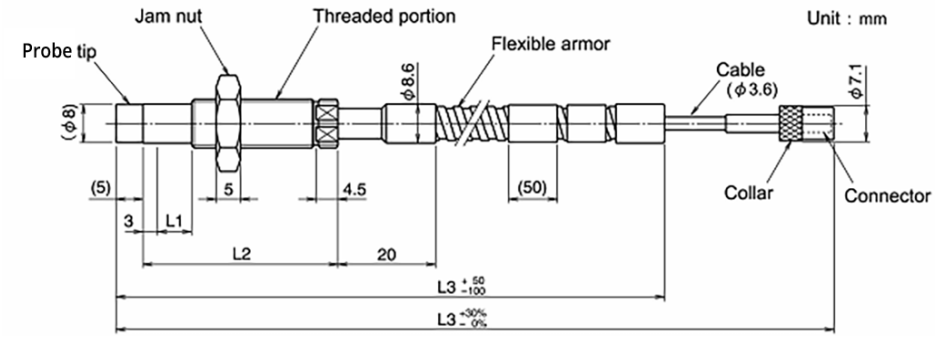

L1	Unthreaded length
L2	Case length
L3	Cable length

Reverse 8 mm Probe - Not Armored

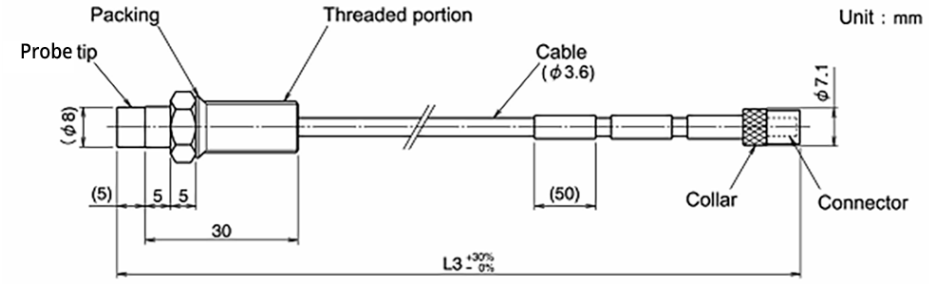

L3	Cable length

11 mm Probes

11 mm Probe - Not Armored

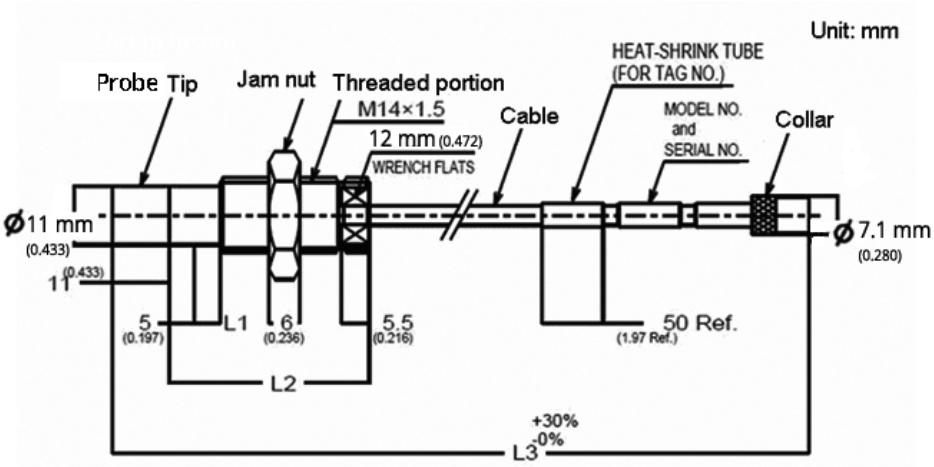

L1	Unthreaded length
L2	Body length
L3	Cable length

11 mm Probe - Not Armored

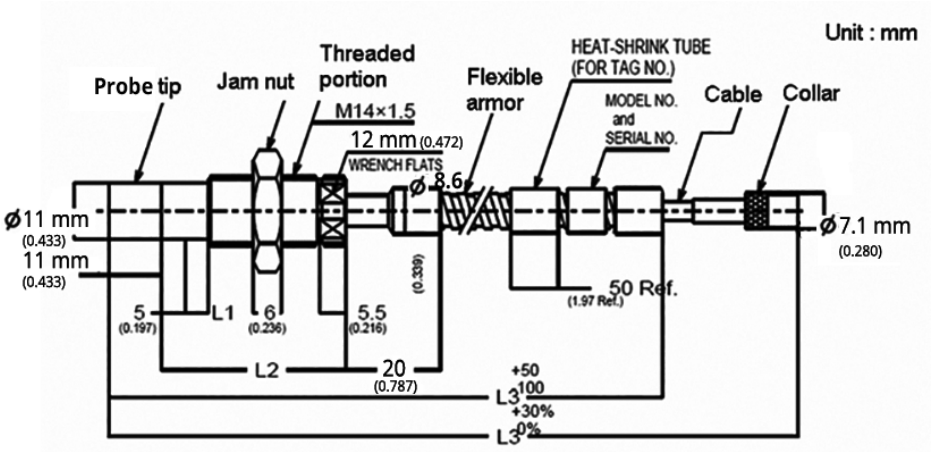

L1	Unthreaded length
L2	Body length
L3	Cable length

18 mm Probe

18 mm Probe - Armored

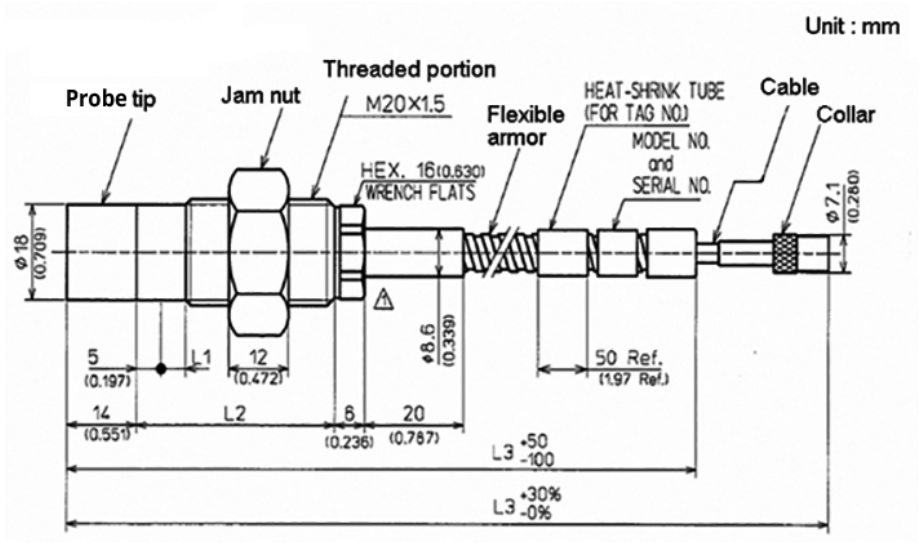

L1	Unthreaded length
L2	Body length
L3	Cable length

25 mm Probes

25 mm Probe - Armored

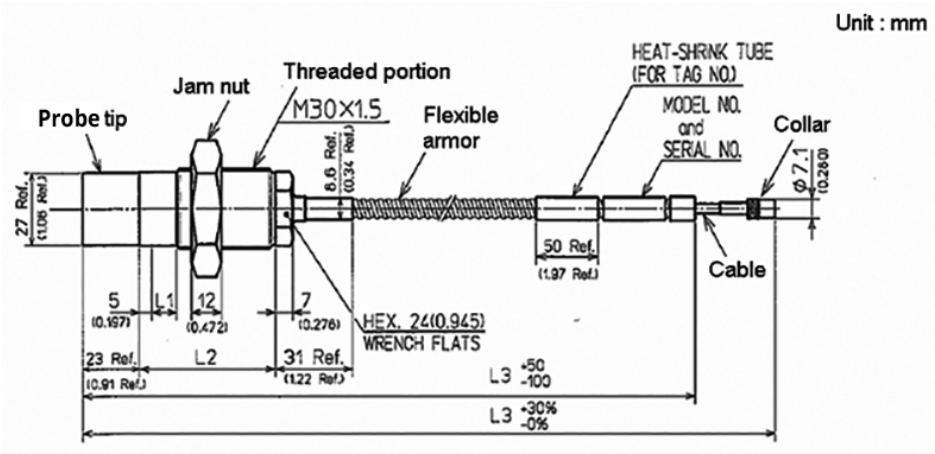

L1	Unthreaded length
L2	Body length
L3	Cable length

25 mm Probe - Flange Mount, Armored

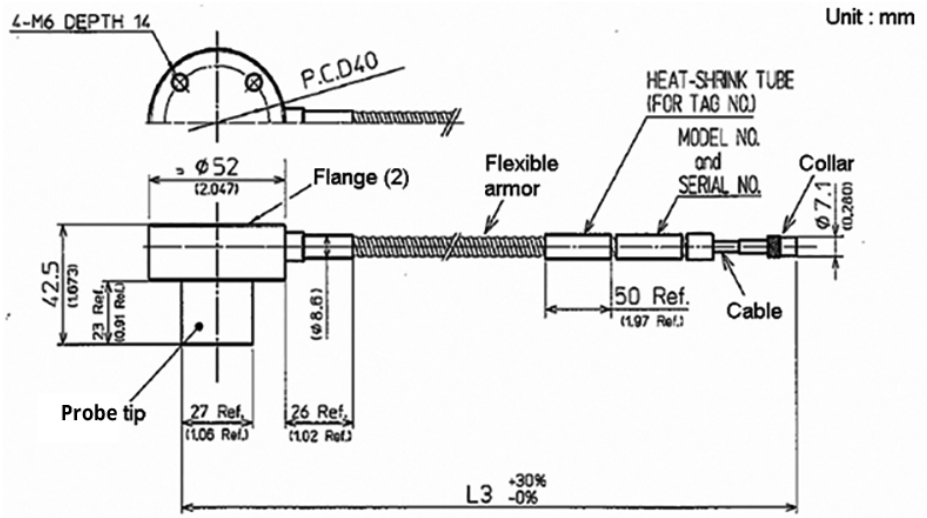

#2	Unthreaded length
L3	Cable length (+30% -0%)

50 mm Probe

50 mm Probe - Armored

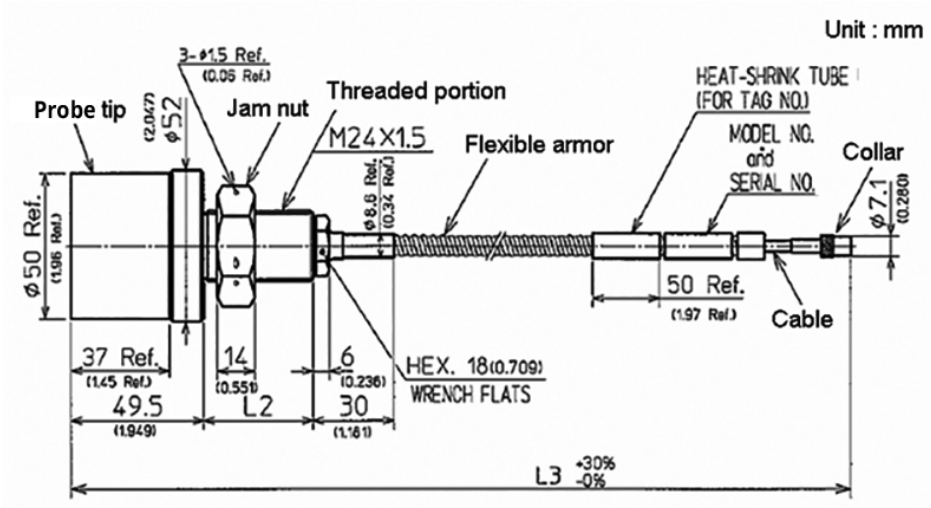

L2	Body length
L3	Cable length

Extension Cable Outer Dimensions and Part Nomenclature

5...11 mm Probe Extension Cables

5 mm, 8 mm, and 11 mm Probe Extension Cables - Non-Armored

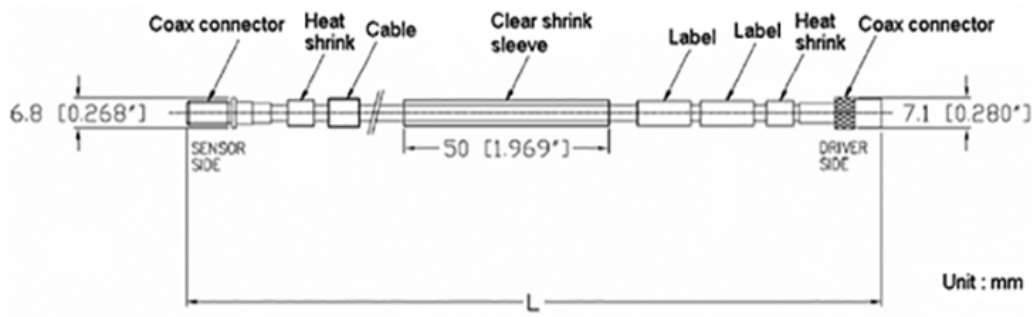

Catalog Number	Length L, +20% -0%
1442-EC-5840N	4.0 m (13 ft)
1442-EC-5845N	4.5 m (14.76 ft)
1442-EC-5880N	8.0 m (26 ft)
1442-EC-5885N	8.5 m (26.89 ft)
1442-EC-1140N	4.0 m (13 ft)
1442-EC-1180N	8.0 m (26 ft)

5 mm and 8 mm Probe Extension Cables - Armored

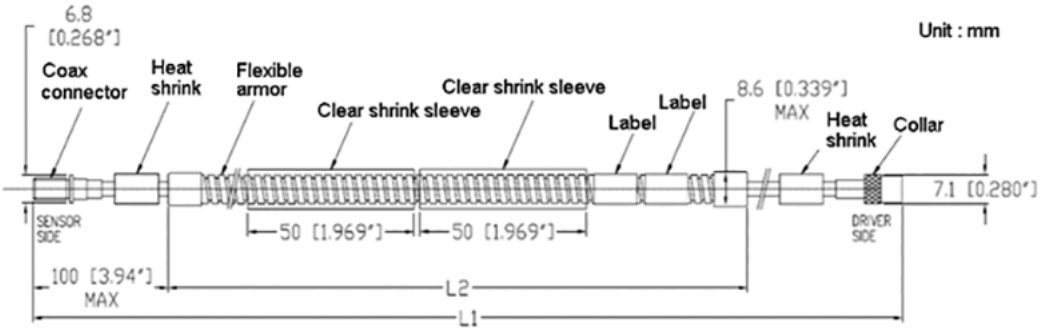

Catalog Number	Length L1, +20% -0%	Length L2, Min
1442-EC-5840A	4.0 m (13 ft)	3.8 m (12.47 ft)
1442-EC-5845A	4.5 m (14.76 ft)	4.3 m (14.11 ft)
1442-EC-5880A	8.0 m (26 ft)	7.8 m (25.59 ft)
1442-EC-5885A	8.5 m (26.89 ft)	8.3 m (27.23 ft)

11...50 mm Probe Extension Cables

11...50 mm Probe Extension Cables - Non-Armored

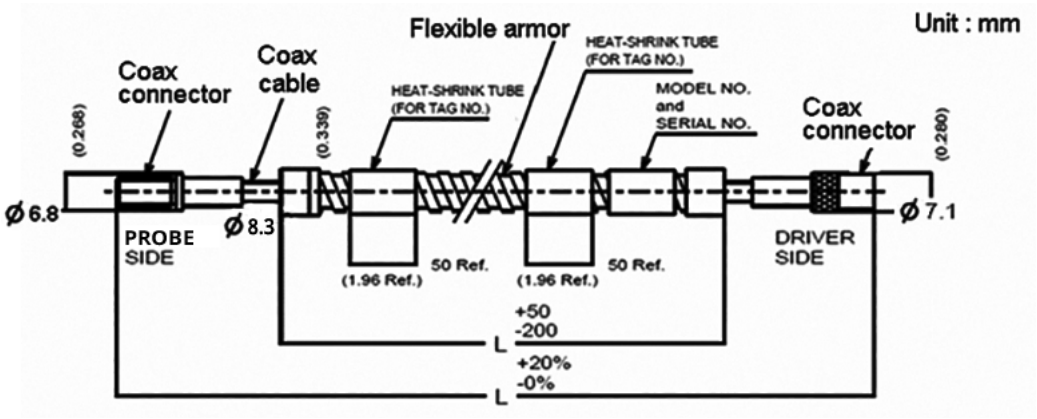

Catalog Number	Length L
1442-EC-1140A	4.0 m (13 ft)
1442-EC-1180A	8.0 m (26 ft)
1442-EC-1840A	4.0 m (13 ft)
1442-EC-1880A	8.0 m (26 ft)
1442-EC-2540A	4.0 m (13 ft)
1442-EC-2580A	8.0 m (26 ft)
1442-EC-5040A	4.0 m (13 ft)
1442-EC-5080A	8.0 m (26 ft)

Driver Outer Dimensions and Part Nomenclature

Driver With DIN Rail Mount

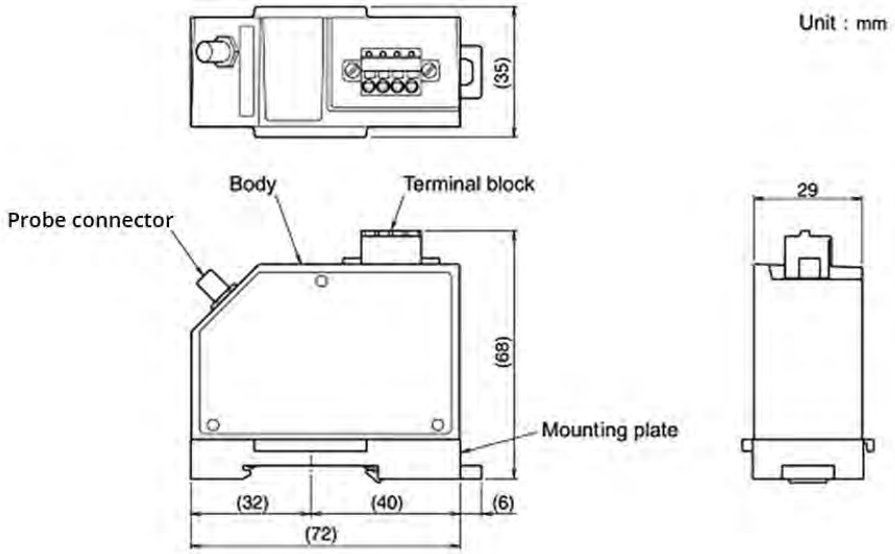

Driver With Screw Mount

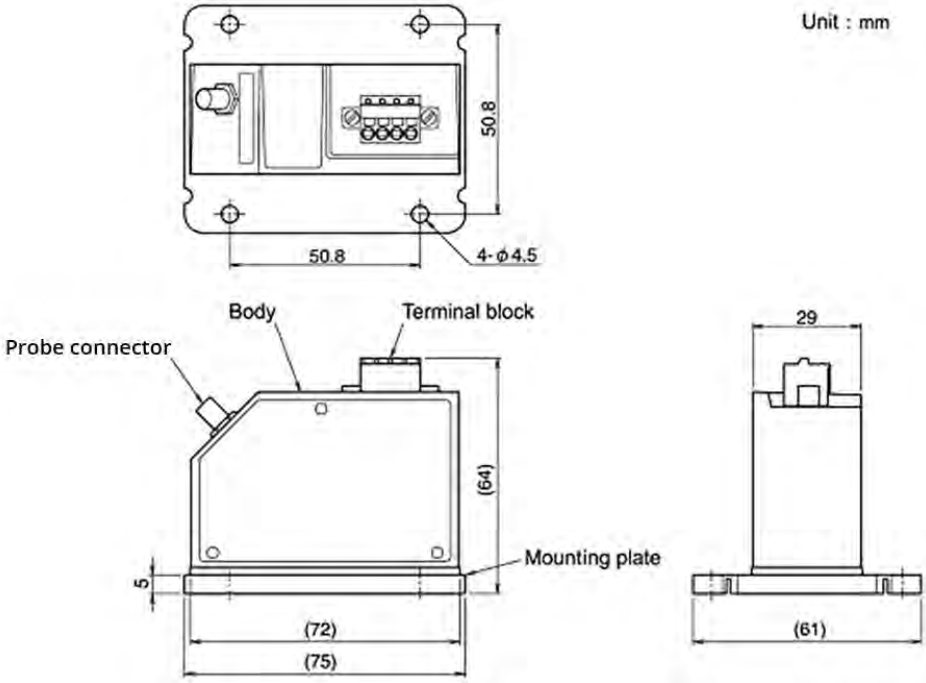

Maintenance and Inspection

This chapter describes the maintenance and inspection procedures for the 1442 Eddy Current Probe System. To maintain performance, inspect the system and its mounts for corrosion, properly tightened or torqued fittings and connections, and component conditions annually.

Check Set Gap Voltage

Check the set gap voltage to maintain the unit when multiple years have passed since it was last adjusted or there is an issue with unit performance.

Follow these steps to check the set gap voltage.

1. Supply power to the unit.
2. Allow the unit to warm up for 5 minutes to stabilize the output.

   Warm-up is necessary to collect accurate data.
3. Connect the tester (voltmeter) across the Input Signal and Input Common terminals on the measurement module base and read the voltage.

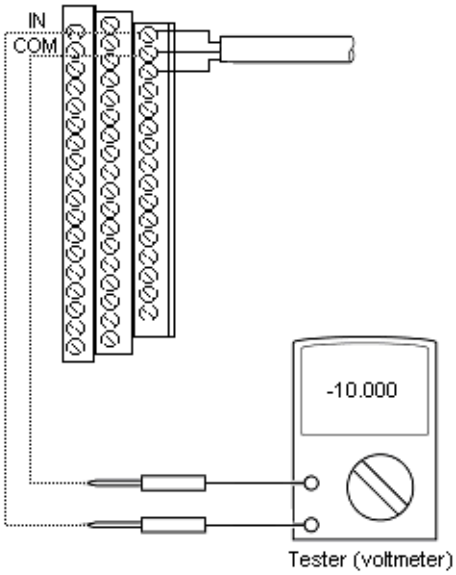

4. To make sure that the desired set gap voltage is indicated, see the Standard Static Characteristics that are found on page 21.

IMPORTANT	The data that is indicated in the Standard Static Characteristics is measured for an SCM440 flat target (diameter more than 33 mm). When the target material or shapes differ, the output characteristics (gain) differ, and it is necessary to compensate with later equipment.

Adjust the Gap

If the desired set gap voltage is not attained, readjust the probe position using this procedure.

1. Loosen the probe jam nut.
2. Use the Standard Static Characteristics that are found on page 21 to prepare a gap gage that matches the gap.
3. Take care not to scratch the probe top and target surface, and insert the gap gage between the probe top and target.

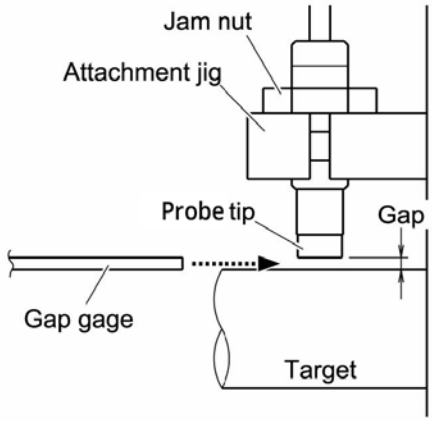

4. Set the gap so that:
   - even when the target is at the nearest point to the probe, the target does not come into direct contact with the probe
   - it does not go beyond the linear range of the connection monitor
5. Adjust the probe to a position where the gap gage just moves freely.
6. Tighten the jam nut, using these torque requirements as a reference.

Torque Requirements

Probe	Example	Tightening Torque		
		N•m	kgf•cm	lb•in
1442-PS-05xxM (5 mm metric)	1442-PS-0503M0010N	4	41	35.4
1442-PS-05xxE (5 mm English)	1442-PS-0512E0010N	1.4	15	12.4
1442-PS-08xxM (8 mm metric)	1442-PS-0803M0010N	8.5	87	75.2
1442-PS-08xxE (8 mm English)	1442-PS-0812E0010N	6.8	69	60.2
1442-PS-11xxM (11 mm metric)	1442-PS-1104M0510N	26.1	266	231
1442-PS-11xxE (11 mm English)	1442-PS-1116E0510N	18.6	190	164
1442-PS-18xxM (18 mm metric)	1442-PS-1805M0510A	58.8	600	520
1442-PS-18xxE (18 mm English)	1442-PS-1820E0510A	88.2	900	780
1442-PS-25xxM (25 mm metric)	1442-PS-2505M0510A	176	1800	1557
1442-PS-25xxE (25 mm English)	1442-PS-2520E0510A	196	2000	1734
1442-PS-50xxM (50 mm metric)	1442-PS-5005M0010A	176	1800	1557
1442-PS-50xxE (50 mm English)	1442-PS-5020E0010A	196	2000	1734
1442-PR-08xxM (8 mm reverse mount metric)	1442-PR-0803M0505N	8.5	87	75.2
1442-PR-08xxE (8 mm reverse mount English)	1442-PR-0812E0205N	6.8	69	60.2

ATTENTION: Make sure to tighten the jam nut at the specified torque. If tightened with excessive torque, the probe can be damaged. If the tightening torque is too small, it can come loose.

The measurement precision that is described in the specifications will be satisfied approximately 5 minutes after turning on the power.

Unit Life

Plan to replace a 1442 Eddy Current Probe System approximately every 10 years.

IMPORTANT Ten years is a general guideline for replacement. If otherwise undisturbed, eddy current probe systems deteriorate over time due to temperature and erosion. The deterioration rate for probes, extension cables, and drivers depends on the specific environmental conditions to which each component is subjected.

The following is a flowchart for determining when a replacement is required.

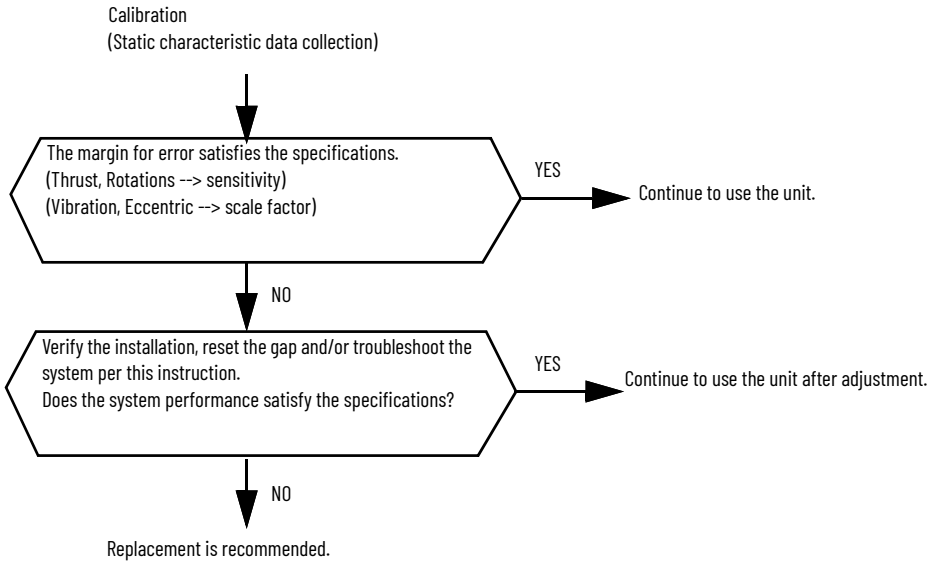

Troubleshoot the Unit

Use this table to troubleshoot problems with the unit.

Symptom	Possible Cause	Recommended Action
Output is 0V DC and does not change.	Power is not on.	Turn on the power.
	Unit is not connected properly.	See the Connect the Wiring procedure in the 1442 Eddy Current Probe Systems Installation Instructions, publication 1442-IN001, to make sure that the unit is wired correctly.
	The driver is faulty.	Replace the driver.
Output is approximately -0.7 V DC and does not change.	The target is beyond the measurement range.	See the Adjust the Gap procedure on to page 18 and adjust the gap.
	The probe failed or the probe cable is shorted or disconnected.	Measure the resistance between the probe connector, and if not normal, replace the probe. Normal value: Probe coil resistance: Approx. 5.5 Ω Probe cable resistance: Approx. 0.25 Ω/m
	The extension cable is shorted or disconnected.	Measure the resistance of the extension cable, and if it is not normal, replace the extension cable. Normal value: Center conductor resistance: Approx. 0.25 Ω/m Outer conductor resistance: 0 Ω Center pin to outer conductor resistance: ∞Ω
	There is a foreign object in the connector.	Disconnect the connector, and remove the foreign object in the connector.
	The driver is faulty.	Replace the driver.
Output is approximately -22V DC and does not change.	The target is outside the possible measurement range.	See the Adjust the Gap procedure on to page 18 and adjust the gap.
	The driver is faulty.	Replace the driver.
The physical gap does not align with the output voltage, resulting in output values that are too high or erroneous.	The target dimension spacing is not correct.	See the Probe Spacing and Target Dimensions section of the 1442 Eddy Current Probe Systems Installation Instructions, publication 1442-IN001, and make sure that the unit is installed correctly.

Individual Characteristic Data

This chapter describes static characteristics, temperature characteristics, and other characteristic data. Use this data to determine the gap.

Standard Static Characteristics

Target material is SCM440[a] flat face (diameter 15 mm or more).

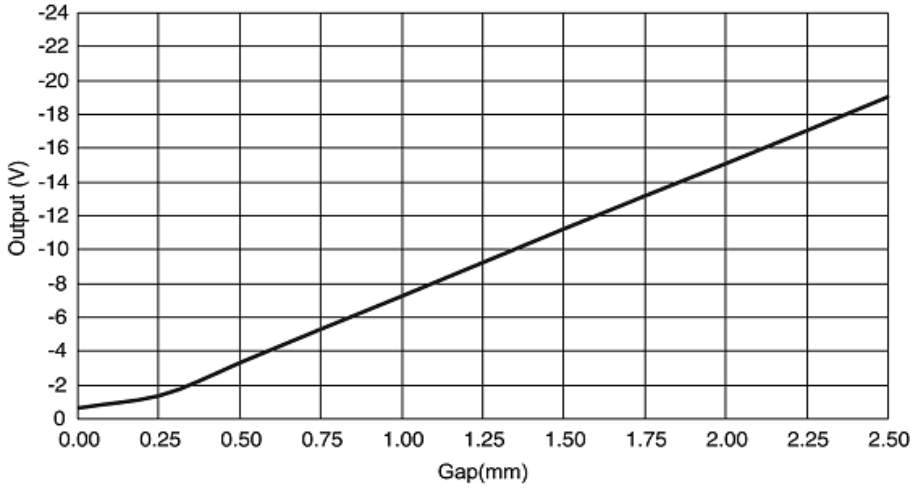

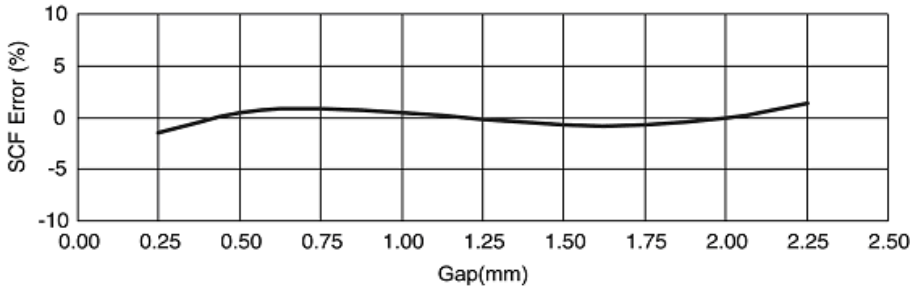

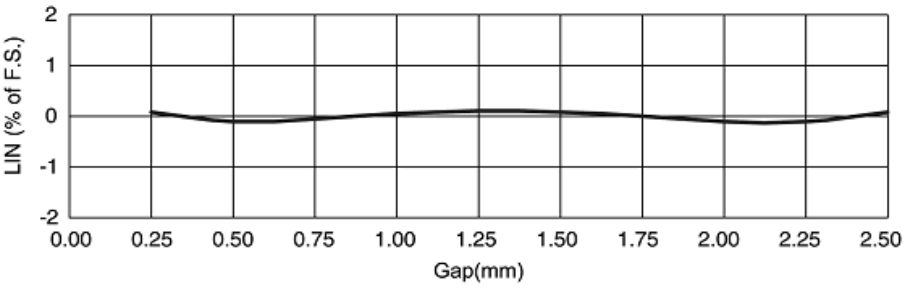

(a) JIS material designation standard. See the Description of Symbols table for equivalent standards in other countries.

Probe Temperature Characteristics

System cable length is 5 m.

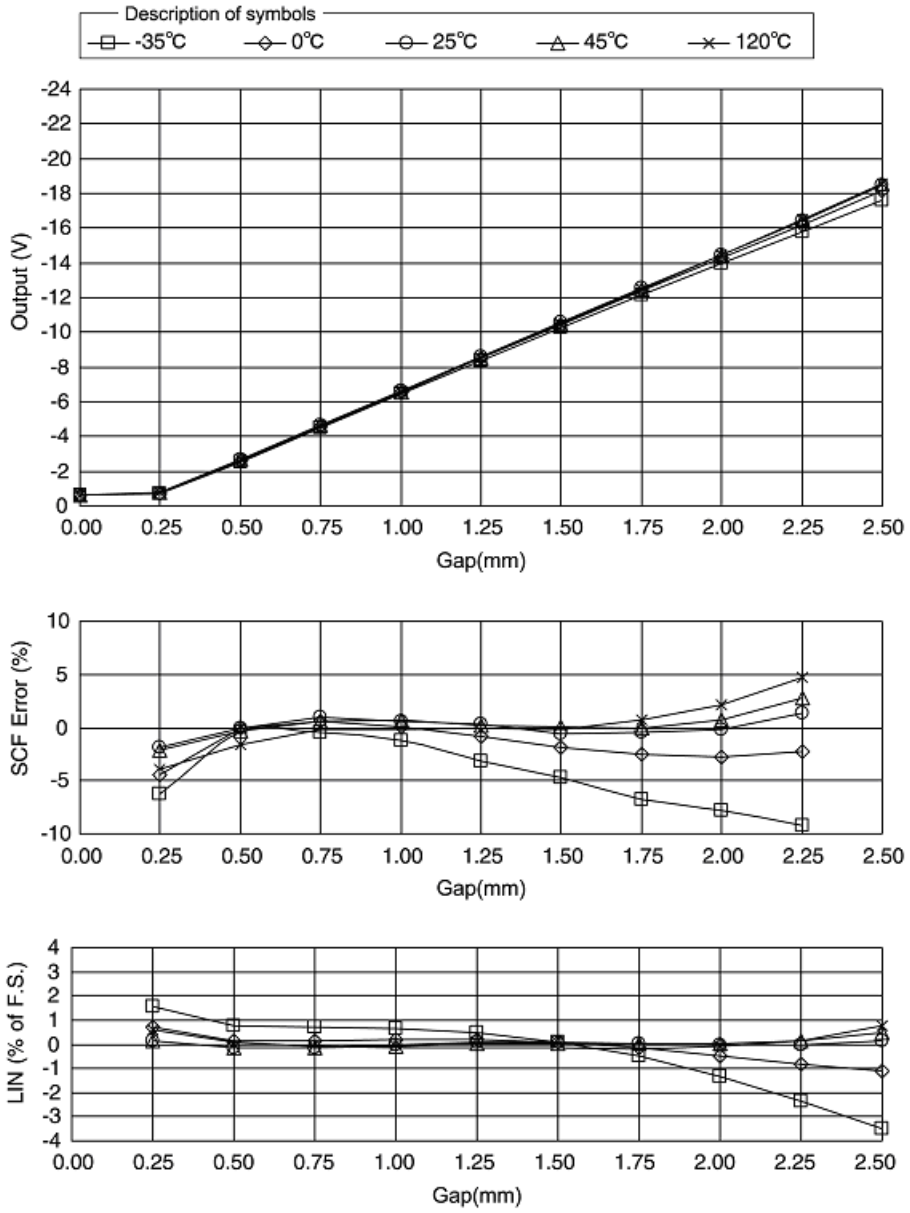

Driver Temperature Characteristics

System cable length is 5 m.

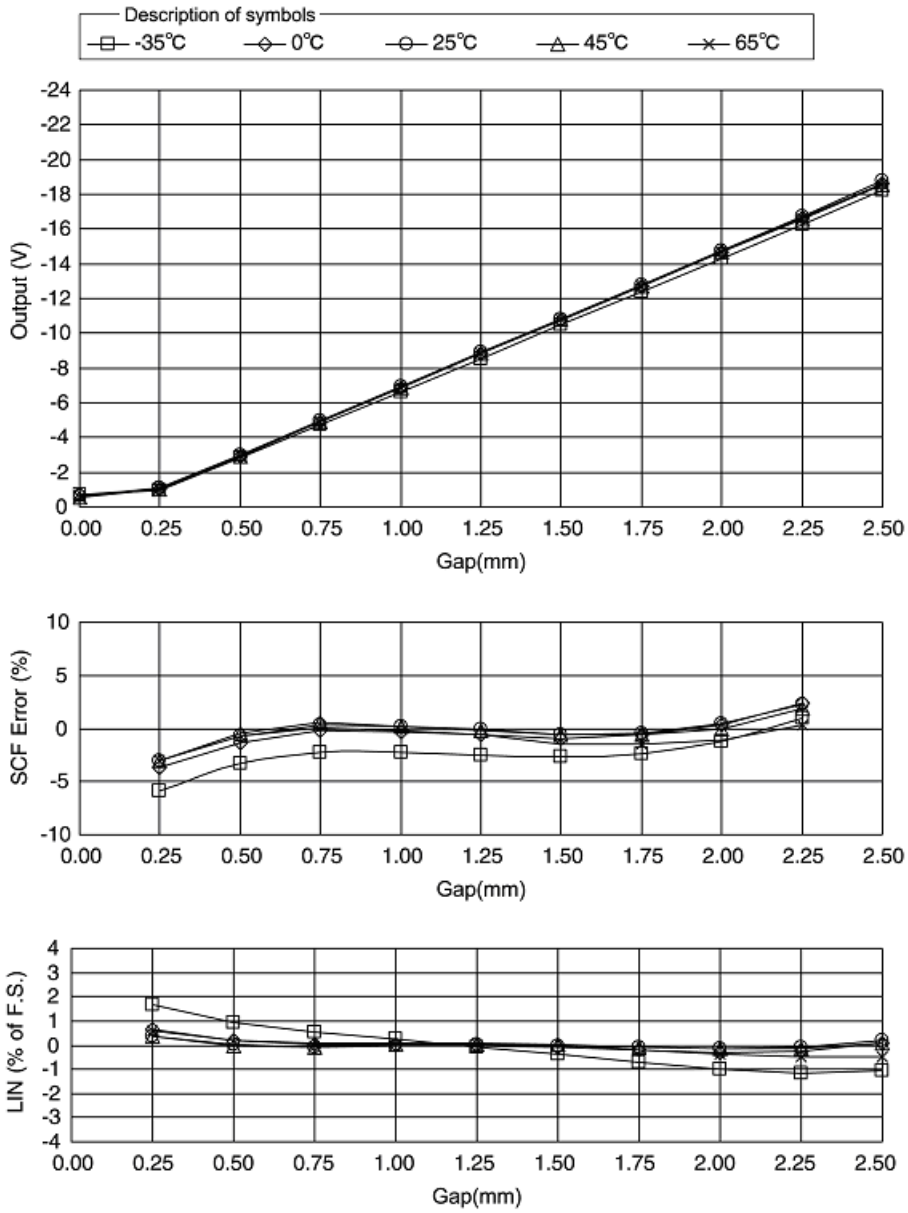

Static Characteristic Effect Due to Power Voltage Variation

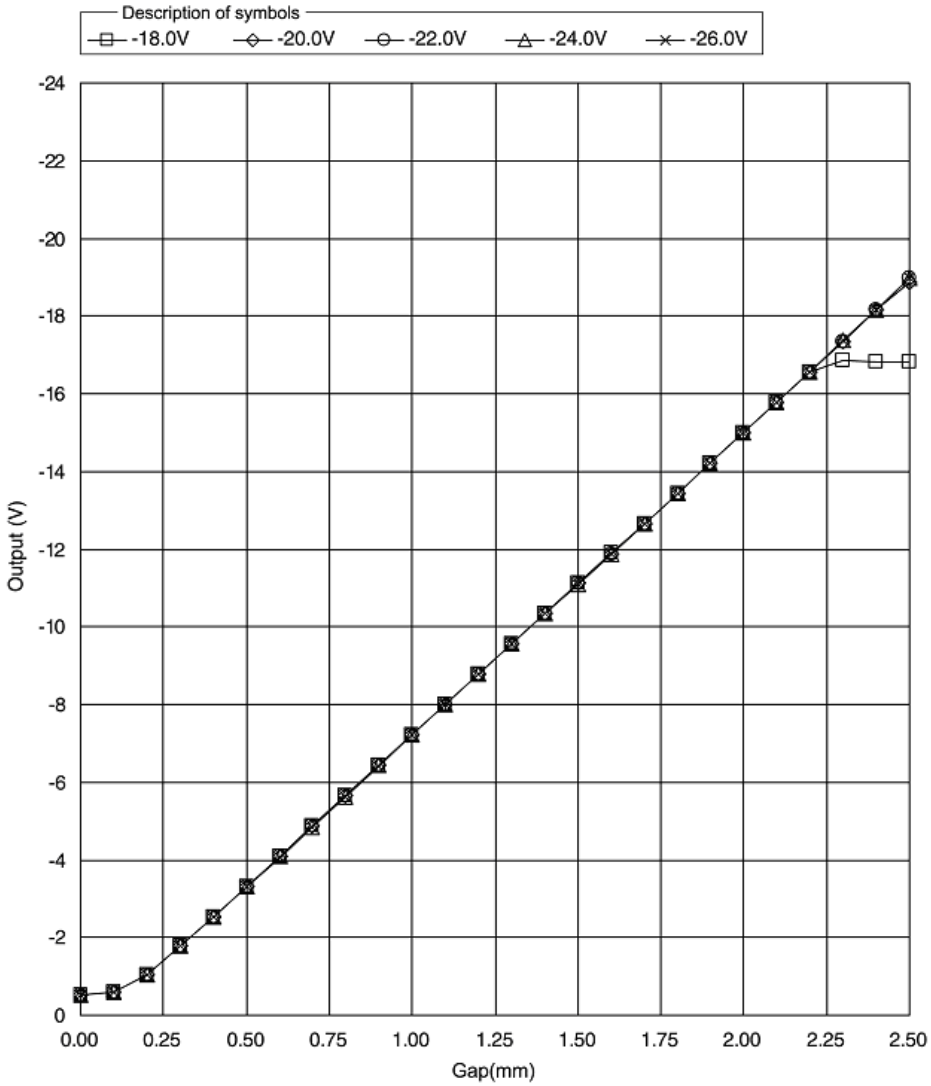

Static Characteristic Effect by Target Material

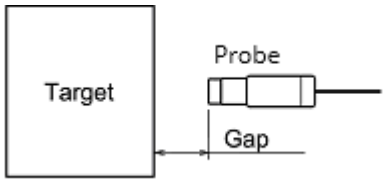

Description of Symbols

Standard	Target Material Grade			
	□	◇	○	△
JIS (Japan)	SCM440	SNCM439	S45C	SUS304
EN (Europe)	1.7225	1.6511	1.1191	1.4301
AISI/SAE (USA)	4140	4340	1045	304
GB (China)	42CrMo	40CrNiMoA	45	0Cr18Ni9
BS (UK)	708A42	817M40	080M46	304S15

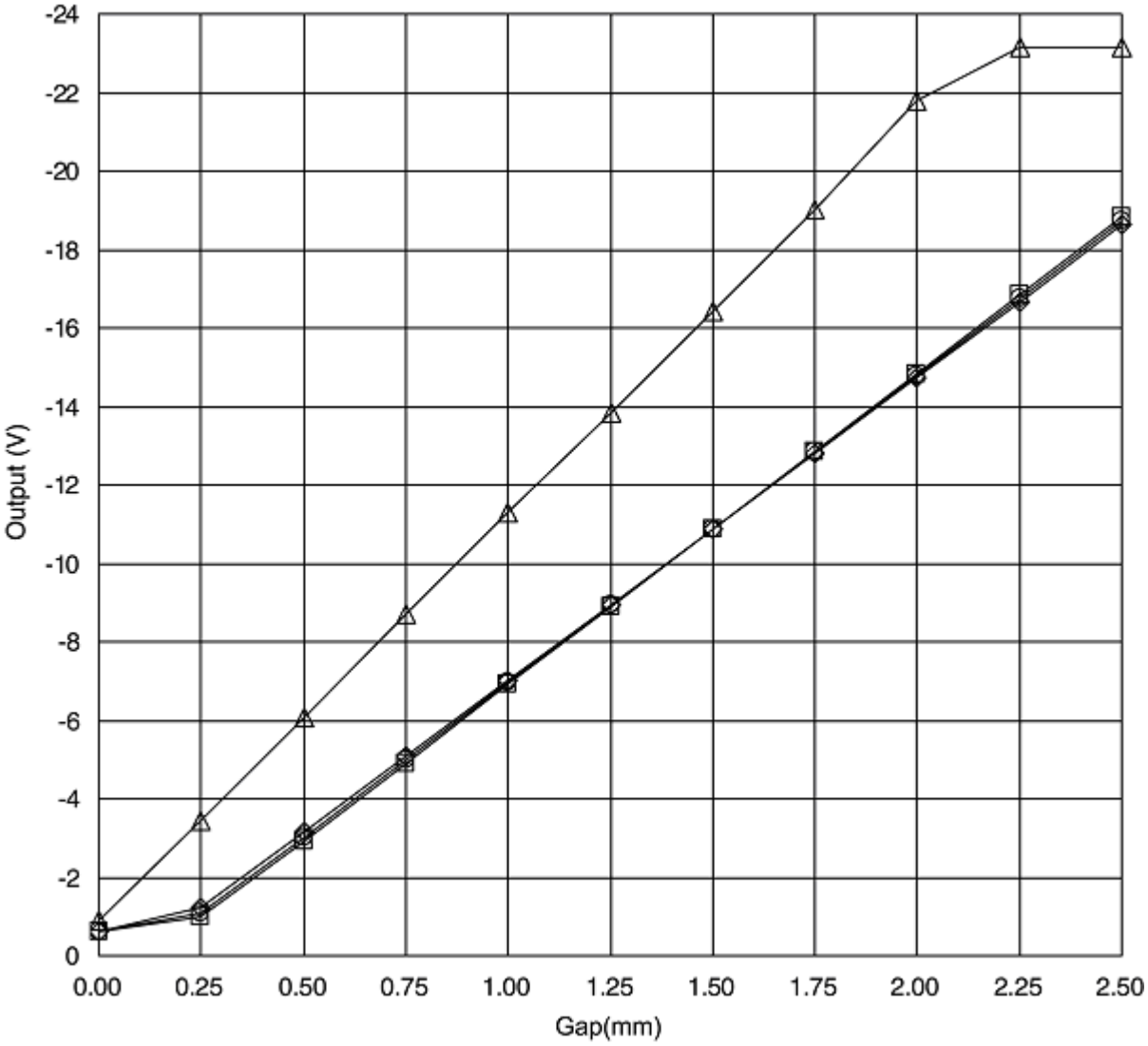

Static Characteristic Effect Due to Target Diameter

Target material is SCM440[(a)].

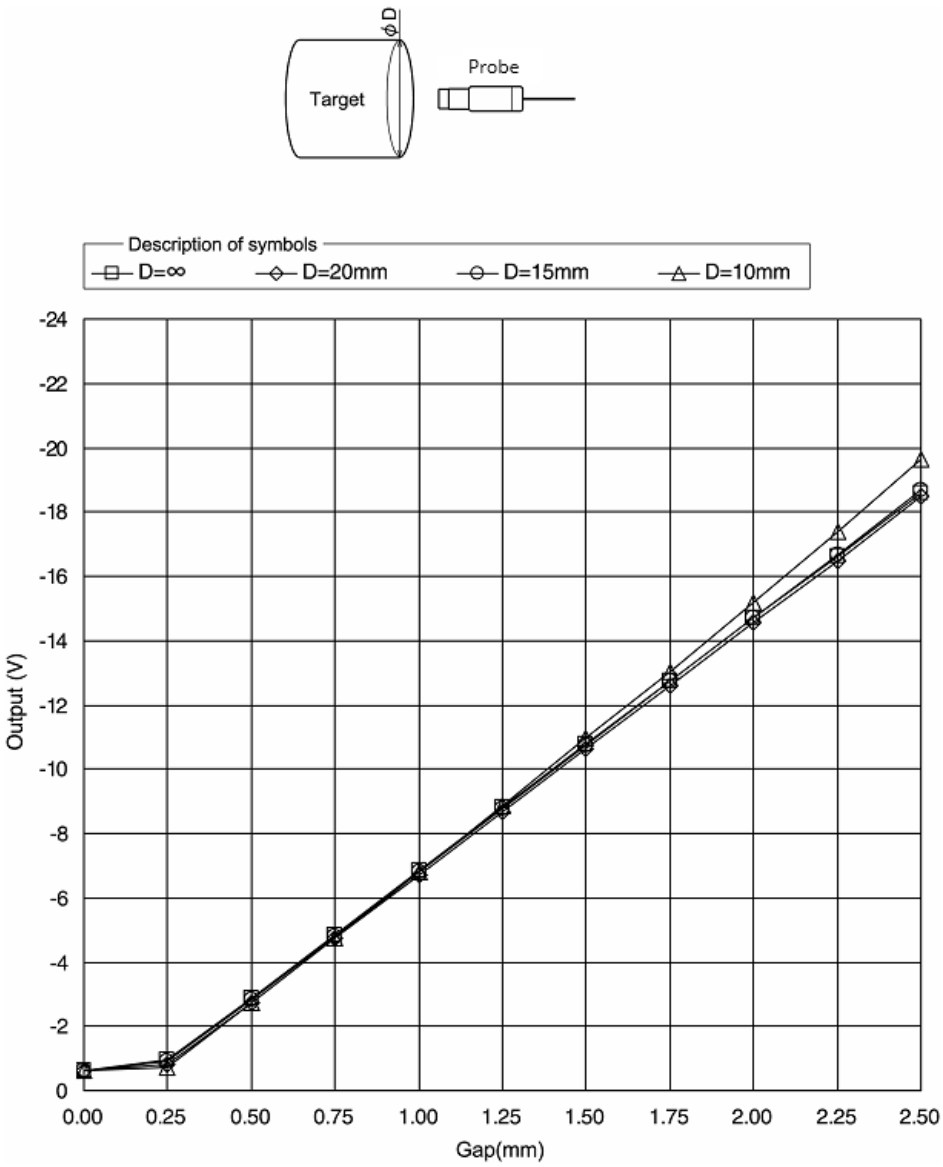

(a) JIS material designation standard. See the Description of Symbols table for equivalent standards in other countries.

Static Effect by Target Curved Surface

Target material is SCM440[(a)].

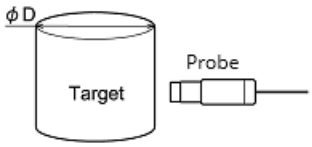

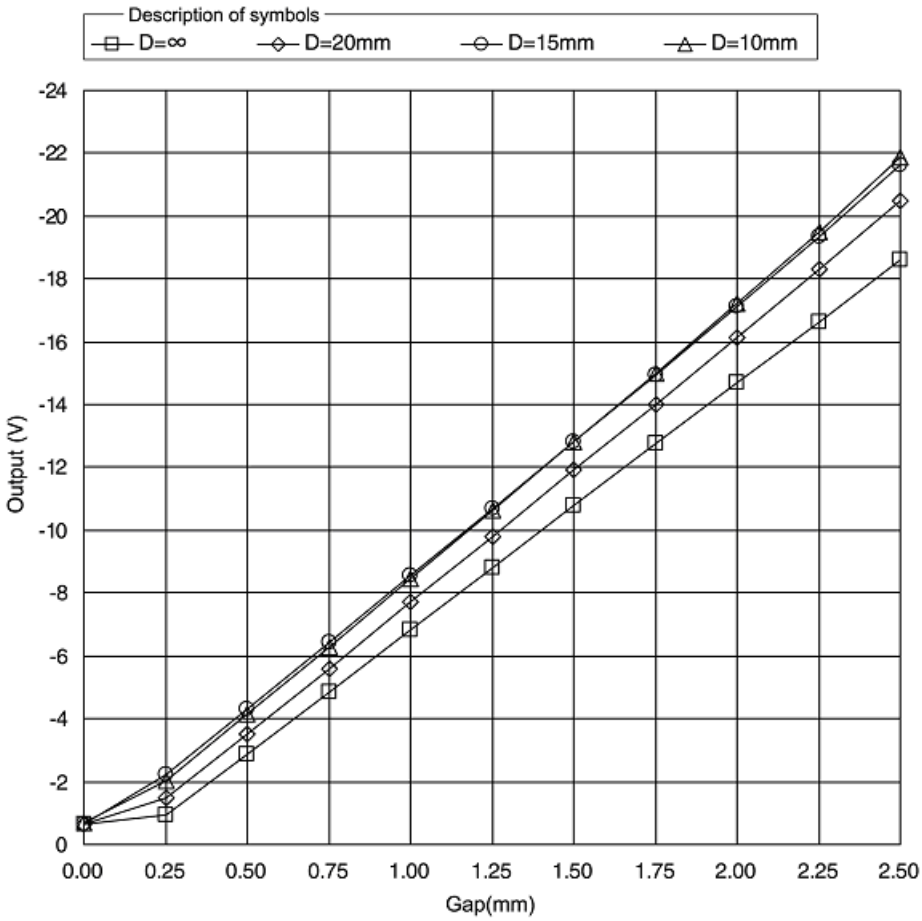

(a) JIS material designation standard. See the Description of Symbols table for equivalent standards in other countries.

Static Characteristic Effect Due to Target End Face

Target material is SCM440[(a)].

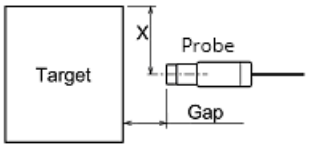

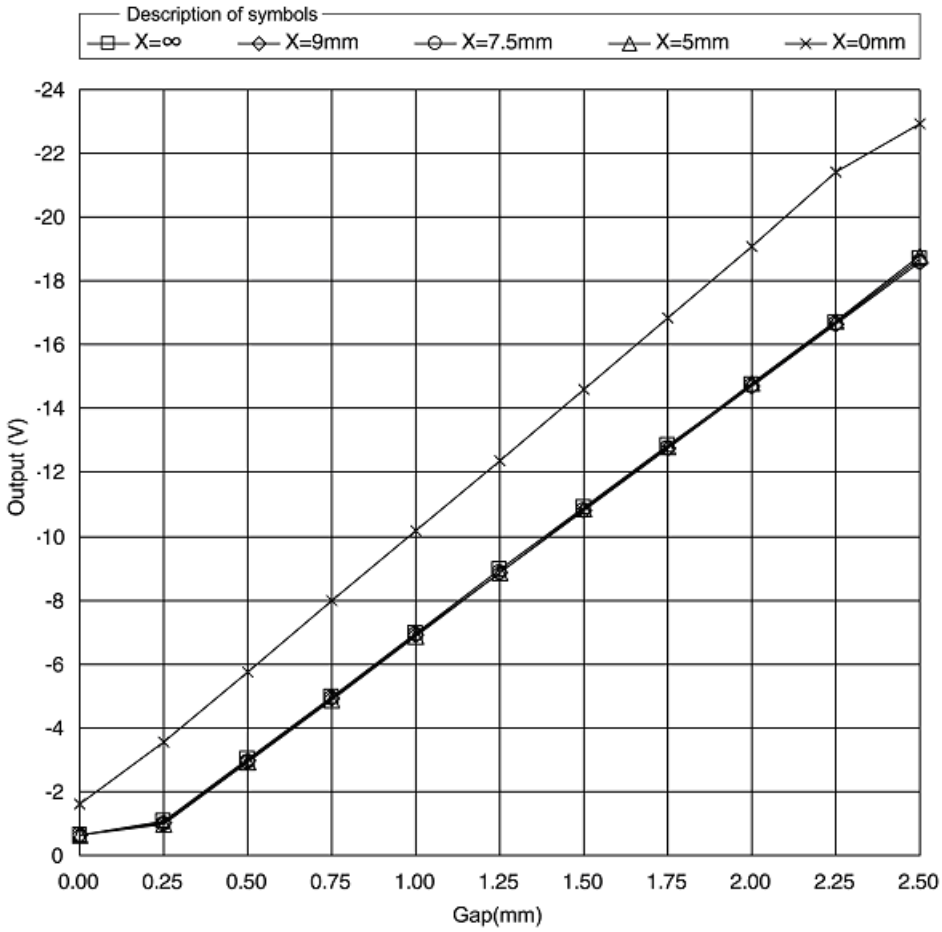

(a) JIS material designation standard. See the Description of Symbols table for equivalent standards in other countries.

Static Characteristic Effect Due to Side Wall

Target and side wall material is SCM440[a].

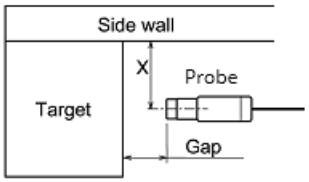

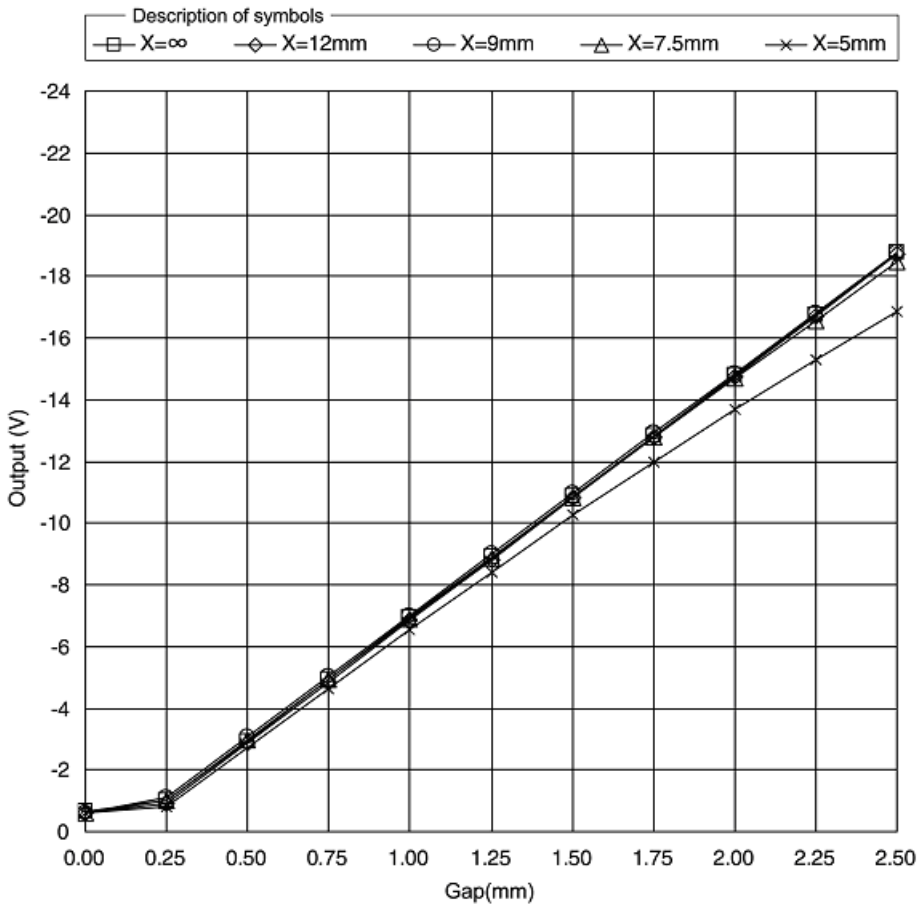

(a) JIS material designation standard. See the Description of Symbols table for equivalent standards in other countries.

Frequency Characteristics

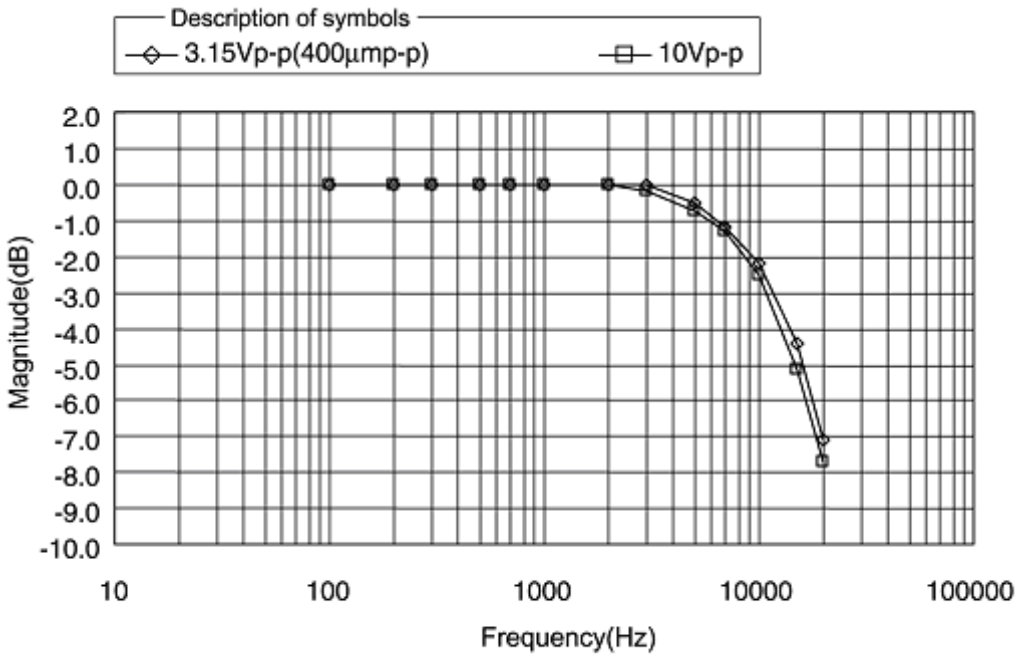

Numerics

G

M

S

T

Rockwell Automation Support

Use these resources to access support information.

Technical Support Center	Find help with how-to videos, FAQs, chat, user forums, Knowledgebase, and product notification updates.	rok.auto/support
Local Technical Support Phone Numbers	Locate the telephone number for your country.	rok.auto/phonesupport
Technical Documentation Center	Quickly access and download technical specifications, installation instructions, and user manuals.	rok.auto/techdocs
Literature Library	Find installation instructions, manuals, brochures, and technical data publications.	rok.auto/literature
Product Compatibility and Download Center (PCDC)	Download firmware, associated files (such as AOP, EDS, and DTM), and access product release notes.	rok.auto/pcdc

Documentation Feedback

Your comments help us serve your documentation needs better. If you have any suggestions on how to improve our content, complete the form at rok.auto/docfeedback.

Waste Electrical and Electronic Equipment (WEEE)

At the end of life, this equipment should be collected separately from any unsorted municipal waste.

Rockwell Automation maintains current product environmental compliance information on its website at rok.auto/pec.

Allen-Bradley, expanding human possibility, and Rockwell Automation are trademarks of Rockwell Automation, Inc.

Trademarks not belonging to Rockwell Automation are property of their respective companies.

Rockwell Otomasyon Ticaret A.Ş. Kar Plaza İş Merkezi E Blok Kat:6 34752, İçerenköy, İstanbul, Tel: +90 (216) 5698400 EEE Yönetmeliğine Uygundur

Connect with us.

rockwellautomation.com — expanding **human possibility**®

AMERICAS: Rockwell Automation, 1201 South Second Street, Milwaukee, WI 53204-2496 USA, Tel: (1) 414.382.2000, Fax: (1) 414.382.4444
EUROPE/MIDDLE EAST/AFRICA: Rockwell Automation NV, Pegasus Park, De Kleetlaan 12a, 1831 Diegem, Belgium, Tel: (32) 2 663 0600, Fax: (32) 2 663 0640
ASIA PACIFIC: Rockwell Automation, Level 14, Core F, Cyberport 3, 100 Cyberport Road, Hong Kong, Tel: (852) 2887 4788, Fax: (852) 2508 1846
UNITED KINGDOM: Rockwell Automation Ltd. Pitfield, Kiln Farm Milton Keynes, MK11 3DR, United Kingdom, Tel: (44)(1908) 838-800, Fax: (44)(1908) 261-917

Publication ICM-UM004E-EN-E - August 2023
Supersedes Publication ICM-UM004D-EN-E - September 2022

Copyright © 2023 Rockwell Automation, Inc. All rights reserved. Printed in the U.S.A.