RELIANCE ELECTRIC

FlexPak 3000 Digital DC Drive Hardware Reference, Installation and Troubleshooting Version 4.3

Instruction Manual D2-3404-2

Rockwell Automation

The information in this manual is subject to change without notice.

Throughout this manual, the following notes are used to alert you to safety considerations:

ATTENTION: Identifies information about practices or circumstances that can lead to personal injury or death, property damage, or economic loss.

Important: Identifies information that is critical for successful application and understanding of the product.

The thick black bar shown on the outside margin of this page will be used throughout this instruction manual to signify new or revised text or figures.

ATTENTION: Only qualified electrical personnel familiar with the construction and operation of this equipment and the hazards involved should install, operate, or service this equipment. Read and understand this manual in its entirety before proceeding. Failure to observe this precaution could result in severe bodily injury or loss of life.

ATTENTION: 380/415 VAC-rated FlexPak drives can be configured for either 380 VAC or 415 VAC input power. Before input power is applied to the drive, verify that the control transformer taps are set to match the input power. Follow the instructions provided in chapter 3 of this manual to set the control transformer taps. Failure to observe this precaution could result in damage to, or destruction of, the equipment

CONTENTS

List of Figures

List of Tables

CHAPTER 1

Introduction to the FlexPak 3000 Drive

The products described in this instruction manual are manufactured by Reliance Electric Industrial Company.

1.1 Store the Drive

After receipt inspection, repack the drive in its original shipping container until ready for installation. To ensure satisfactory operation at startup and to maintain warranty coverage, store the drive as follows:

- In its original shipping container in a clean, dry, safe place.
- In an ambient temperature that does not exceed 65°C (149°F) or go below -30°C (-22°F).
- Within a relative humidity range of 5 to 95% without condensation.
- Away from a corrosive atmosphere. In harsh environments, cover the shipping/ storage container.
- At an altitude of less than 3,000 meters (10,000 ft.) above sea level.

1.2 Drive Identification Nameplate

The FlexPak 3000 drive has a nameplate on the left side of the chassis that identifies the specific model number design, applicable AC input power and DC output power data. Refer to the sample nameplate in figure 1.1. All communication concerning this product should refer to the appropriate model number information.

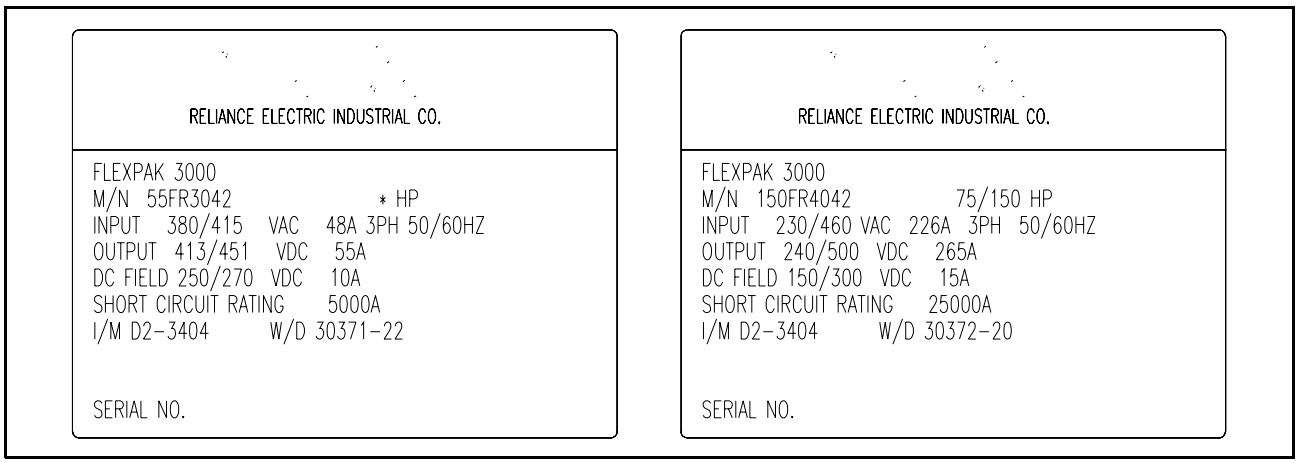

Figure 1.1 – Sample FlexPak 3000 Nameplates

1.3 Model Numbers

Drive specific data, such as horsepower (or output current), regenerative or non-regenerative type, line voltage, chassis or enclosure type, software version and UL certification, can be determined by the drive model number. The model number structure is shown in figure 1.2.

Up to 300 HP, drives configured for 460 VAC input can be converted to 230 VAC input at one half the 460 VAC horsepower rating by installing a 460 to 230 Volt Conversion Kit (M/N 916FK0100, 1-60 HP, or M/N 916FK0200, 75-150 HP). Instruction manual D2-3329, which is supplied with the kit, provides installation instructions. For drives above 300 HP, contact your local Reliance Electric sales office for assistance.

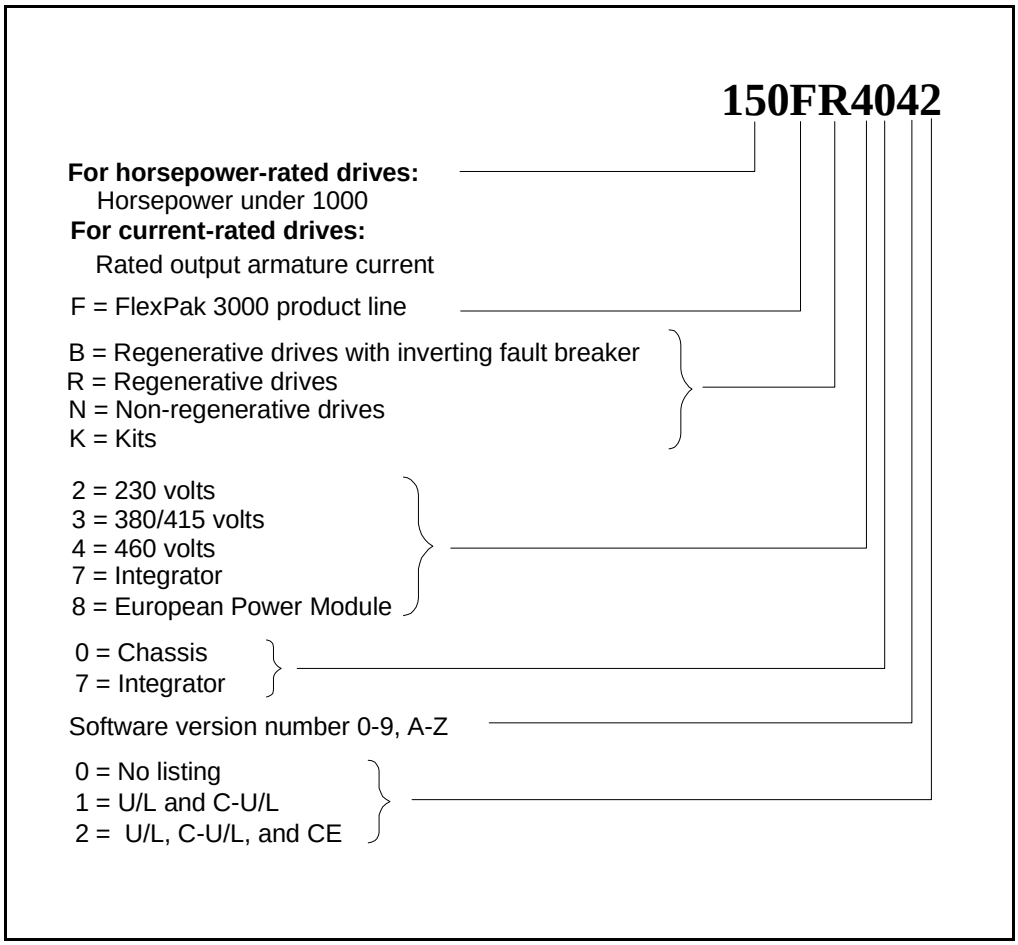

Figure 1.2 – Model Number Structure

1.4 Drive Description

The drive is a full-wave power converter without back rectifier, complete with a digital current minor loop and a digital major loop for armature voltage or speed regulation by tachometer feedback. Figure 1.3 shows a block diagram of the drive.

The drive employs a wireless construction and uses a keypad for drive setup, including parameter adjustments and unit selection, monitoring, and diagnostics. Multiple language capability in English, French, German, Spanish, Italian and ‘Numeric Code' is available. Reference, feedback, and metering signals can be interfaced to the drive. The drive can be controlled locally by the Operator Interface Module (OIM) keypad or remotely by using the terminals at the regulator board terminal strip. You can select one of the following active control sources using the CONTROL SOURCE SELECT key:

- KEYPAD
- TERMBLK (regulator board terminal strip)
- NETWORK (if an optional network communication board is installed)
- SERIAL (CS3000).

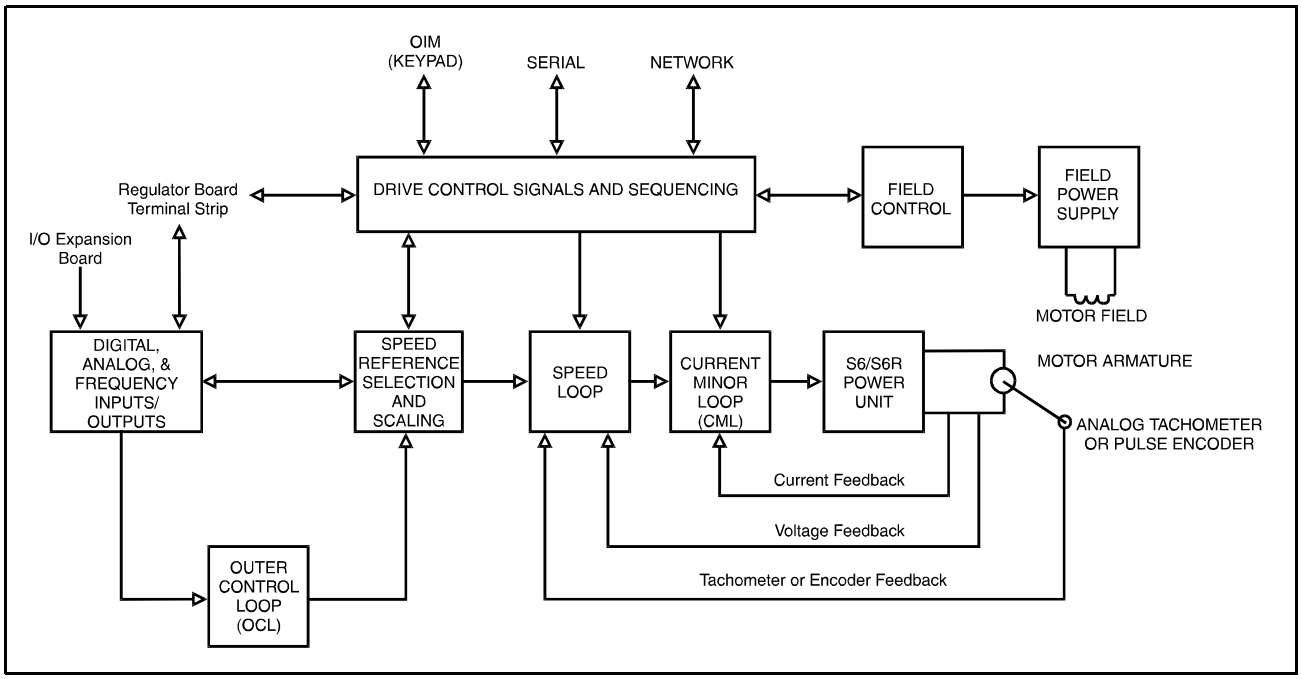

Figure 1.3 – FlexPak 3000 Functional Block Diagram

1.5 Additional Information

Refer to the following publications as necessary for more information.

- D2-3405 FlexPak 3000 DC Drives Software Start-up and Reference Manual
- D2-3344 FlexPak 3000 Operator Interface Module (OIM) User Guide
- D2-3348 Control and Configuration Software (CS3000)
- D2-3412 DC Contactor Use with Integrator Drives

1.6 Optional Kits

Reliance offers modification kits that broaden the application range of the drive. A summary of these kits is presented in table 1.1. Not all kits can be used with all drive model numbers. Refer to the Standard Drives and Control Products catalog (D-406) for more information.

Table 1.1 – Drive Modification Kits

Name	Description	Model Number	I/M Number
115 VAC Control Interface	Converts customer-supplied 115 VAC signals to 24 VDC for operating a FlexPak 3000. Mounts separately on the panel or can be mounted in the bottom of a NEMA 1 enclosed drive.	917FK0101	D2-3338
460 VAC to 230 VAC Conversion Kit	Allows conversion of the 460 VAC FlexPak 3000 to a 230 VAC FlexPak 3000 at one-half the 460 VAC horsepower rating.	916FK series	D2-3329
AC Line Disconnect Kit	Allows the three-phase line to be disconnected at the drive. Molded case switch that mounts on the chassis of the drive or NEMA 1 enclosure.	901FK series	D2-3292, D2-3365 or D2-3395
AC Tachometer Feedback Kit	Allows the FlexPak 3000 to accept feedback signals from AC tachometers to a maximum voltage of 275 VAC RMS.	907FK0301	D2-3297
AutoMax Network Communication Board	Allows the FlexPak 3000 to communicate on the Reliance AutoMax Distributed Control System (DCS).	915FK0101	D2-3318
Blower Motor Starter Kit	Provides a fused AC starter with adjustable overload and interlocking for control of the three-phase blower motor used to cool the DC motor.	902FK series	D2-3295
DeviceNet Communication Board	Allows a FlexPak 3000 to communicate over the open protocol DeviceNet network. Mounts inside the FlexPak 3000 and includes terminals for network connections. You cannot use the AutoMax Network Communication board when using the DeviceNet board.	915FK1100	n/a
Drive Control Configuration Software for FlexPak 3000	Windows-based software that allows the user to connect any personal computer running Microsoft Windows version 3.1 or later to a FlexPak 3000 drive. Allows you to create, store, upload, and download drive configurations. You can also start and stop the drive, monitor and change parameters through the PC, and read and reset the drive's fault log.	2CS3000	D2-3348
ControlNet Network Communication Board	Allows a FlexPak 3000 to communicate over the ControlNet network.	915FK2101	D2-3425

Table 1.1 – Drive Modification Kits

Name	Description	Model Number	I/M Number
Dynamic Braking Kit	Provides the hardware, including braking grids, needed to provide dynamic braking on stop.	908FK, 909FK, 912FK, and 913FK series	D2-3313 or D2-3374
Enhanced Field Supply Kit	Provides electronic field trim, field economy, and the ability to supply 240V field voltage and other special voltages. This kit replaces the standard field supply.	923FK series	D2-3413
Field Current Regulator Kit	Provides field economy, as well as pre-weakening of the field using a fixed reference or field weakening for above base speed operation. Tachometer feedback is required with this kit. This kit replaces the standard field supply.	911FK series	D2-3336
I/O Expansion Board	Mounts on the FlexPak 3000 chassis and gives the FlexPak 3000 additional analog, frequency, and digital I/O capability.	914FK0101	D2-3301
Inverting Fault Circuit Breaker Kit	This kit is an alternative to drives supplied with inverting fault fuses.	906FK series	D2-3300 or D2-3330
NEMA 1 Conversion Kit	Converts the standard chassis to a NEMA 1 enclosure.	904FK series	D2-3299 or D2-3331
Operator Interface Module (OIM) Remote Mounting Kit	Allows mounting of the OIM up to five meters from the drive.	905FK0101	D2-3294
Pulse Encoder Feedback Kit	Allows for digital pulse encoder speed feedback.	907FK0101	D2-3302

1.7 Getting Assistance from Reliance Electric

If you have any questions or problems with the products described in this instruction manual, contact your local Reliance Electric sales office. For technical assistance, call 864-284-5444.

CHAPTER 2

Install and Wire the Drive

2.1 Install the Drive - Panel Layout

Minimum clearances must be maintained when the drive is mounted within a cabinet as shown in figure 2.1. This allows adequate ventilation for the drive.

Regardless of these placement guidelines, the user is responsible for ensuring that the drive's ambient temperature specification. See appendix A for more information.

Install the drive(s) in the cabinet. Refer to figures 2.2 through 2.7 for mounting dimensions.

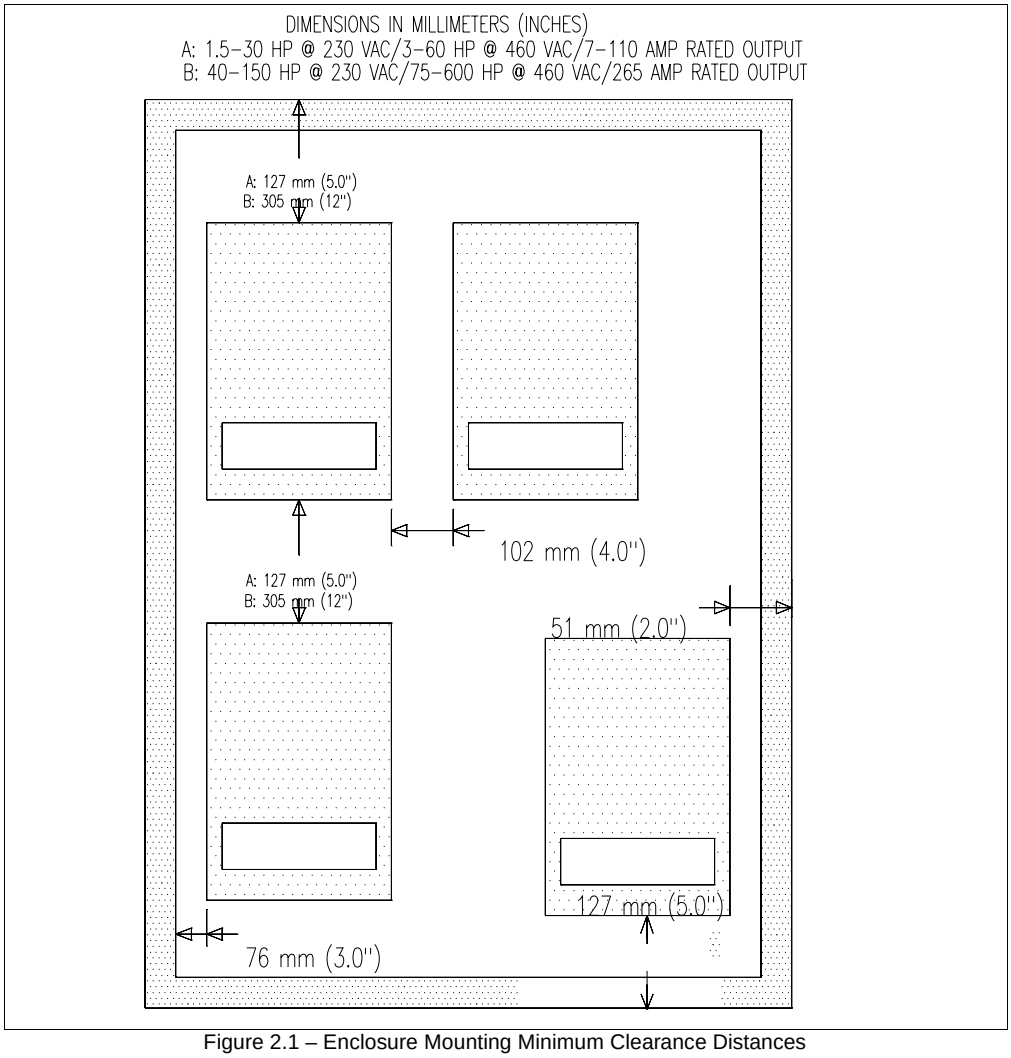

Figure 2.1 – Enclosure Mounting Minimum Clearance Distances

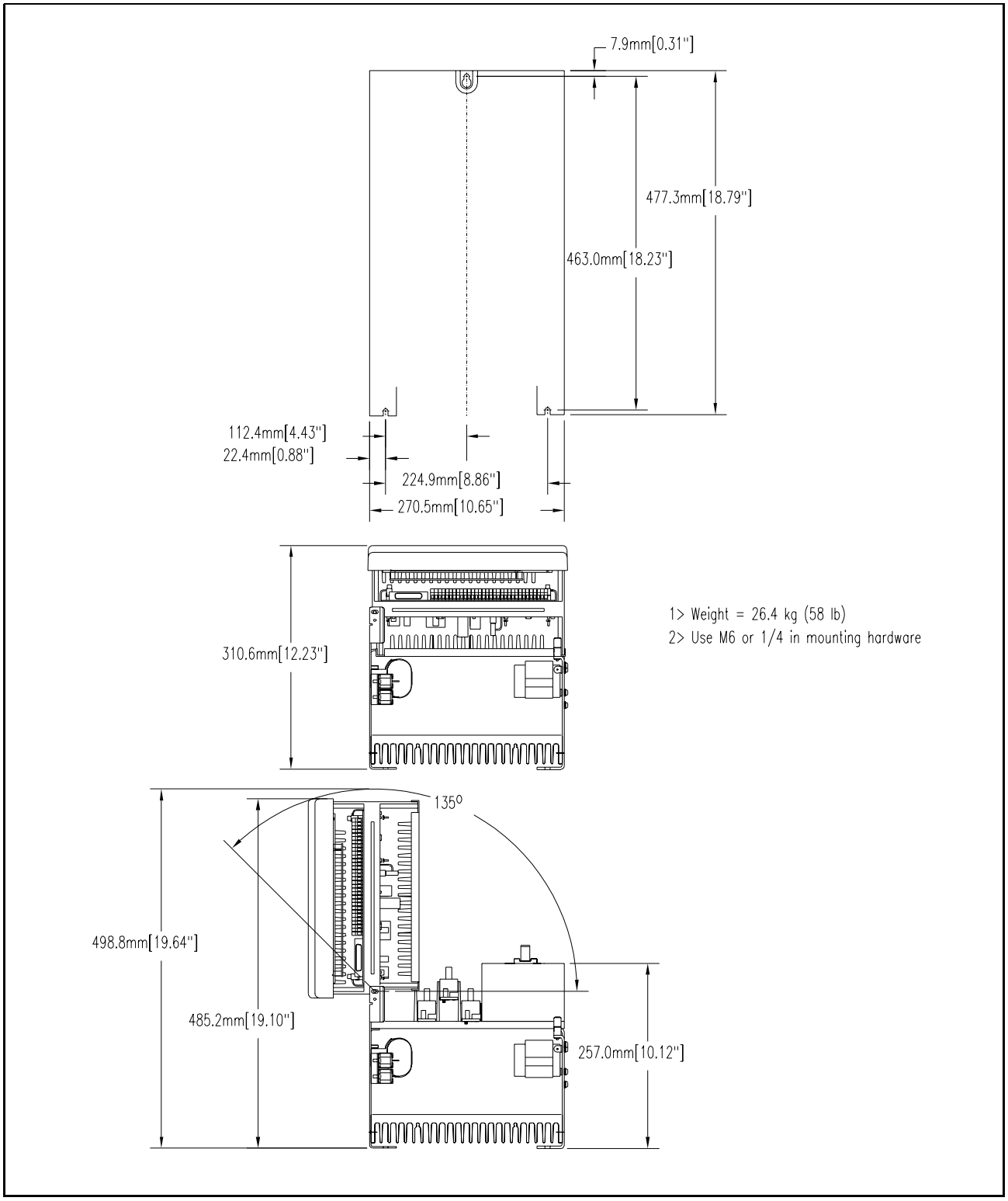

Figure 2.2 – Drive Mounting Dimensions (1.5 to 30 HP @ 230 VAC / 3 to 60 HP @ 460 VAC / 7 to 110 Amp Rated Output)

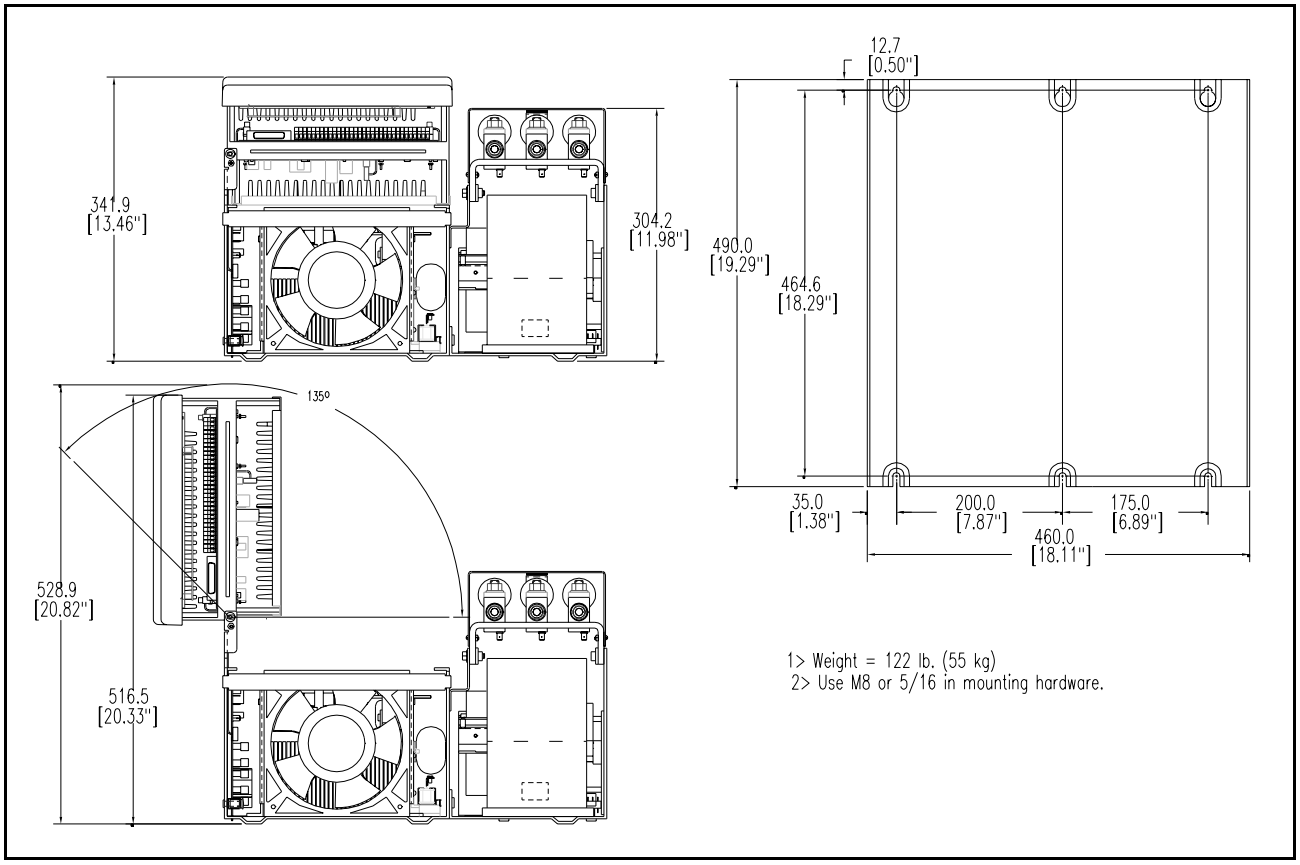

Figure 2.3 – Drive Mounting Dimensions (40 to 75 HP @ 230 VAC / 75 to 150 HP @ 460 VAC / 265 Amp Rated Output)

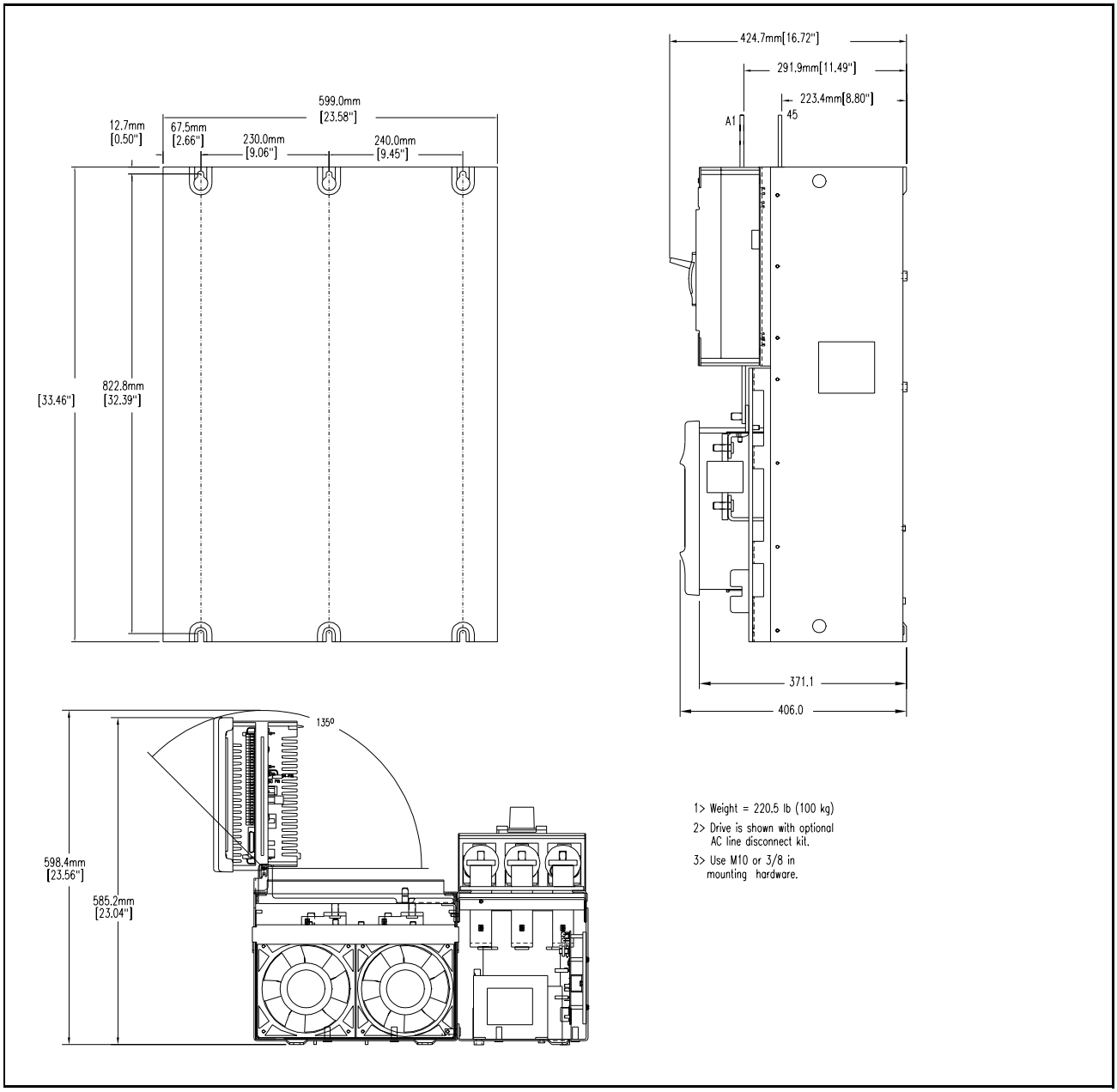

Figure 2.4 – Drive Mounting Dimensions (100 to 150 HP @ 230 VAC / 200 to 300 HP @ 460 VAC)

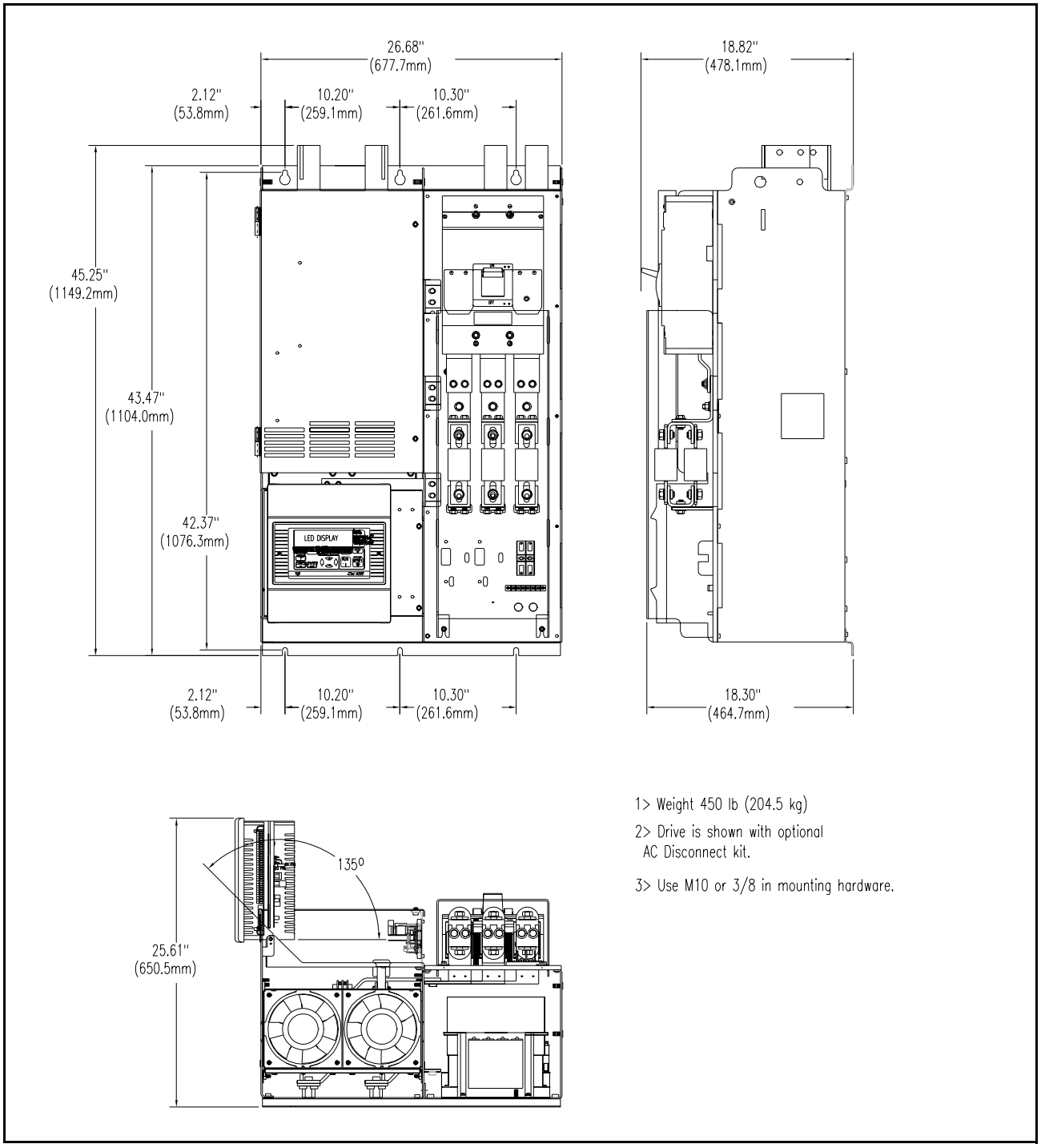

Figure 2.5 – Drive Mounting Dimensions (400 to 600 HP @ 460 VAC)

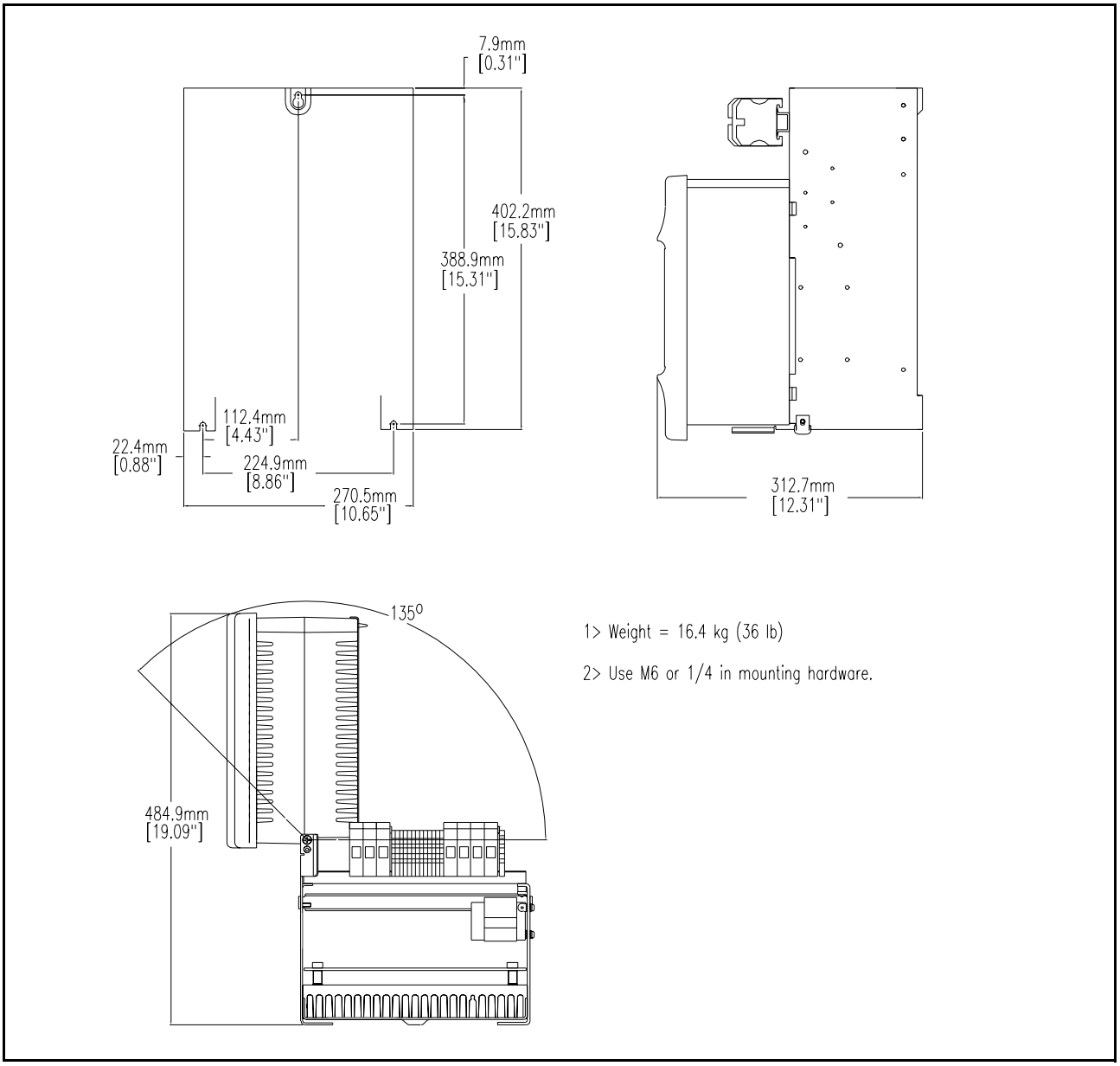

Figure 2.6 – Integrator Drive Mounting Dimensions (1.5 to 30 HP @ 230 VAC / 3 to 60 HP @ 460 VAC

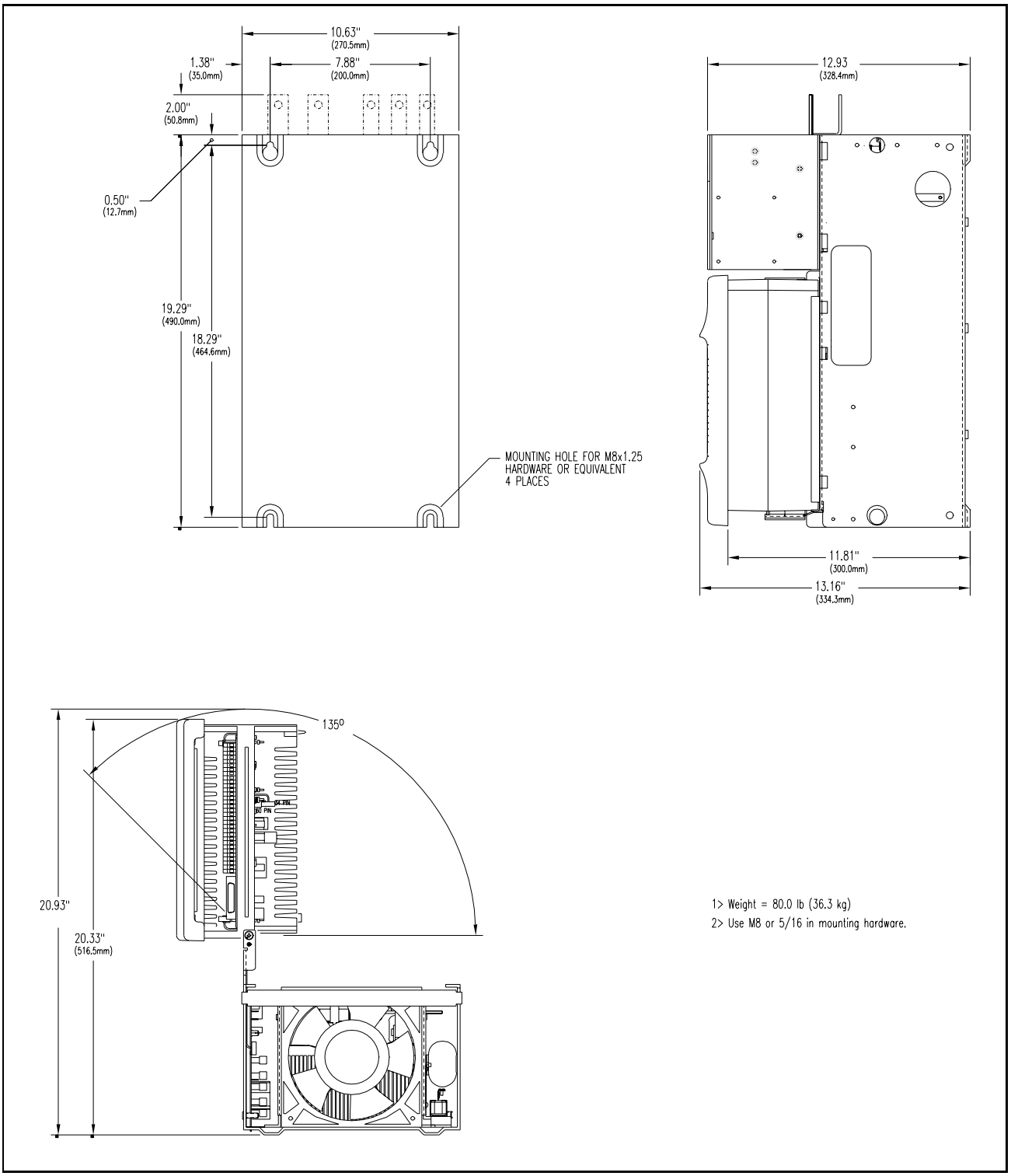

Figure 2.7 – Integrator Drive Mounting Dimensions (40 to 75 HP @ 230 VAC / 75 to 150 HP @ 460 VAC)

2.2 Install a Transformer

ATTENTION: If an input transformer is installed ahead of the drive, a power disconnecting device must be installed between the power line and the primary of the transformer. If this power disconnecting device is a circuit breaker, the circuit breaker trip rating must be coordinated with the inrush current (10 to 12 times full-load current) of the input transformer. Distribution system capacity above the maximum recommended system KVA requires using an isolation transformer, a line reactor, or other means of adding similar impedance. Failure to observe this precaution could result in damage to, or destruction of, the equipment

ATTENTION: Connection of a drive to a transformer with a primary rating of 2300 VAC or more may require additional input line conditioning. Contact your local Reliance Electric sales/service office for assistance when this is required. Failure to observe this precaution could result in damage to, or destruction of, the equipment.

Input transformers step up or step down input voltage and can be either auto or isolation transformer types. Users should consider using an isolation transformer instead of an auto transformer for the following advantages:

- AC power line disturbances and transients are minimized by an isolation transformer, thus reducing or eliminating possible damage to solid state components.
- An isolation transformer provides electrical isolation for the drive from plant power system grounds. Damaging currents may be avoided in instances where the DC output is accidentally grounded or where the DC motor circuits are grounded.

Refer to tables A.1 and A.6 for more information. Reliance offers a series of isolation transformers suitable for use with the drive. Call you local Reliance Electric sales office for assistance.

2.3 Install an Input Disconnect

ATTENTION: The NEC/CEC requires that an input disconnect be provided in the incoming power line and either be located within sight of the drive or have provisions for a padlock. Install an input disconnect in the incoming power line that is located within sight of the drive or that has provisions for a padlock. Failure to observe this precaution could result in severe bodily injury or loss of life.

Any fused disconnect or circuit breaker in the incoming AC line must accommodate a maximum symmetrical AC fault current as indicated in Appendix A of this instruction manual. Size the disconnect to handle the transformer primary current as well as any additional loads the disconnect may supply.

Step 1. Install an input disconnect in the incoming power line according to the NEC/CEC if not provided with the drive. The disconnect switch should be within clear view of machine operator and maintenance personnel for easy access and safety. An open-type switch with provisions for a padlock is recommended.

Step 2. Wire this disconnect in the primary circuit of the drive isolation transformer (if used).

2.4 Install the Motor

Step 1. Verify that the motor is the appropriate rating to use with the drive.

Step 2. Install the DC motor in accordance with its installation instructions.

Step 3. Make sure that coupled applications have proper shaft alignment with the driven machine or that belted applications have proper sheave/belt alignment to minimize unnecessary motor loading.

Step 4. If the motor is accessible while it is running, install a protective guard around all exposed rotating parts.

Step 5. Wire the motor to the drive. Refer to section 2.6.4, “Wire the DC Motor to the Drive.”

2.5 General Wiring Practices

ATTENTION: The user is responsible for conforming to the National Electric Code (NEC/CEC) and all other applicable local codes. Wiring practices, grounding, disconnects, and overcurrent protection are of particular importance. Size and install all wiring in conformance with the NEC/CEC and all other applicable codes. Failure to observe this precaution could result in severe bodily injury or loss of life.

The drive is designed for AC power entry and DC power exiting at the top and control and signal wiring entering from the bottom.

Reference signal wiring should be run in a separate conduit isolated from all AC and DC power and control. Signal wires should not be run in parallel with high voltage or electrically noisy conductors. Always cross such conductors at 90°. All reference signals should be wired with either twisted double or twisted triple conductor wire, 2 twists per inch, stranded copper, AWG No. 16, 600 VAC rated, poly-vinyl chloride insulation, with a temperature range of 40°C to 105°C (104°F to 221°F).

Tachometer feedback and other signal wiring should be run in a separate conduit isolated from all AC and DC power and logic control. Wiring should be the same as for the reference signals. For mounting with external contacts and solenoids, coils should be suppressed to reduce noise.

Important: The maximum recommended wire length from the drive to the motor is 1000 feet.

2.5.1 Ground the Drive and Enclosure, the Motor and the Operator's Control Station

You must ground both the control and power wiring.

Step 1. Locate the drive ground points as shown in figures 2.8 through 2.13.

Step 2. Run a suitable equipment grounding conductor unbroken from any drive ground point (see step 1) to the plant ground (grounding electrode). A ring lug is recommended at the ground point.

Step 3. Connect a suitable grounding conductor from each conduit to this drive ground point.

Step 4. Connect a suitable equipment grounding conductor to the motor frame, the transformer enclosure if used, and the drive enclosure. Run this conductor unbroken to the grounding electrode.

Step 5. Connect the GND (green/ground) wire brought in with the incoming AC power line to the drive ground point.

Step 6. Tighten chassis ground connections per table 2.1.

Table 2.1 – Chassis Ground Torgue Requirements

Hardware Size	Tightening Torque
M5	18 lb/in (2 Nm)
M6	33 lb/in (3.7 Nm)
M8	100 lb/in (11.3 Nm)
M10	200 lb/in (23 Nm)
Lug with 14-10 AWG	35 lb/in (4 Nm)
Lug with 8 AWG	40 lb/in (4.5 Nm)
Lug with 6-4 AWG	45 lb/in (5.1 Nm)

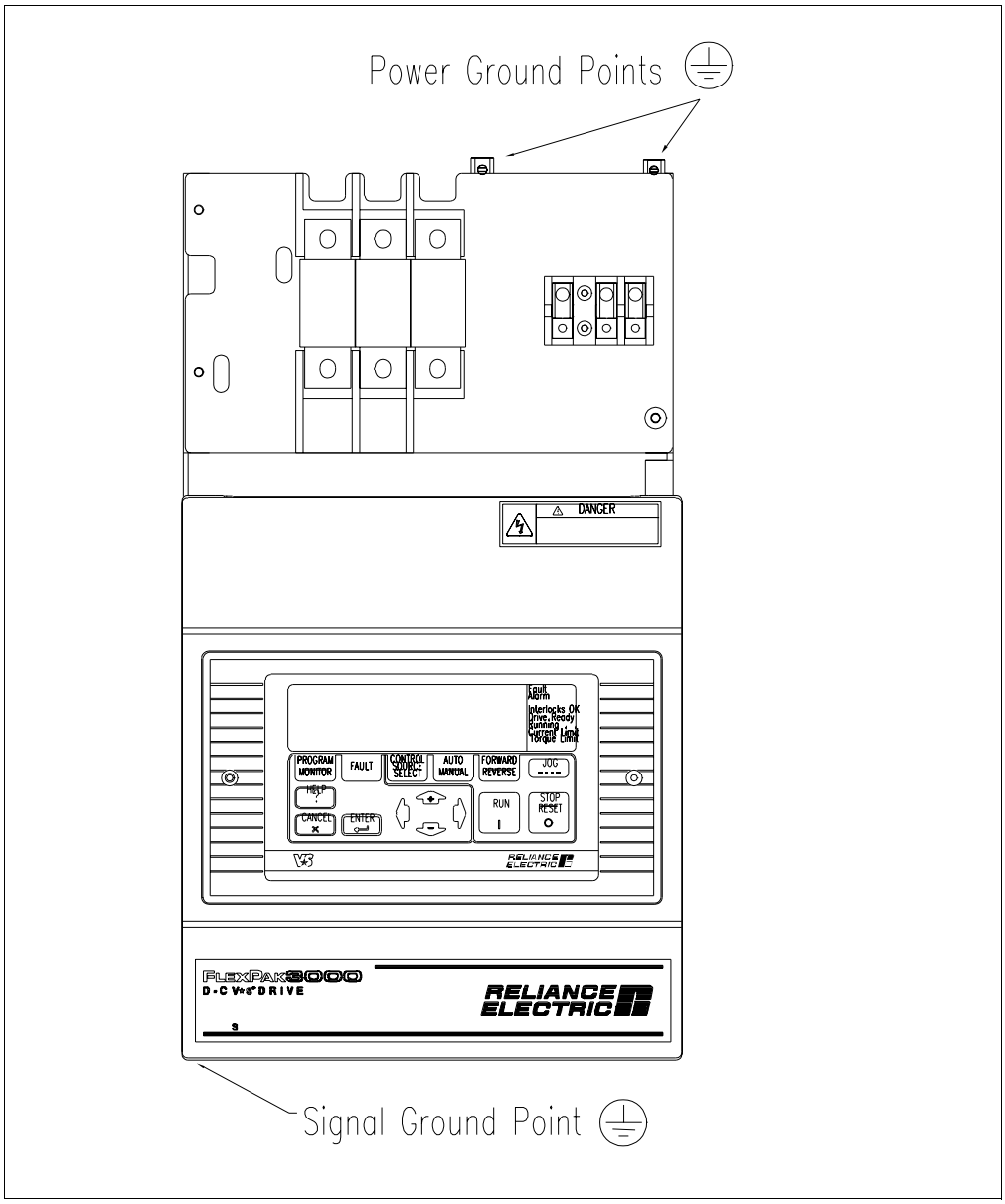

Figure 2.8 – Drive Control and Power Ground Point Locations (1.5 to 30 HP @ 230 VAC / 3 to 60 HP @ 460 VAC / 7-110 Amp Rated Output)

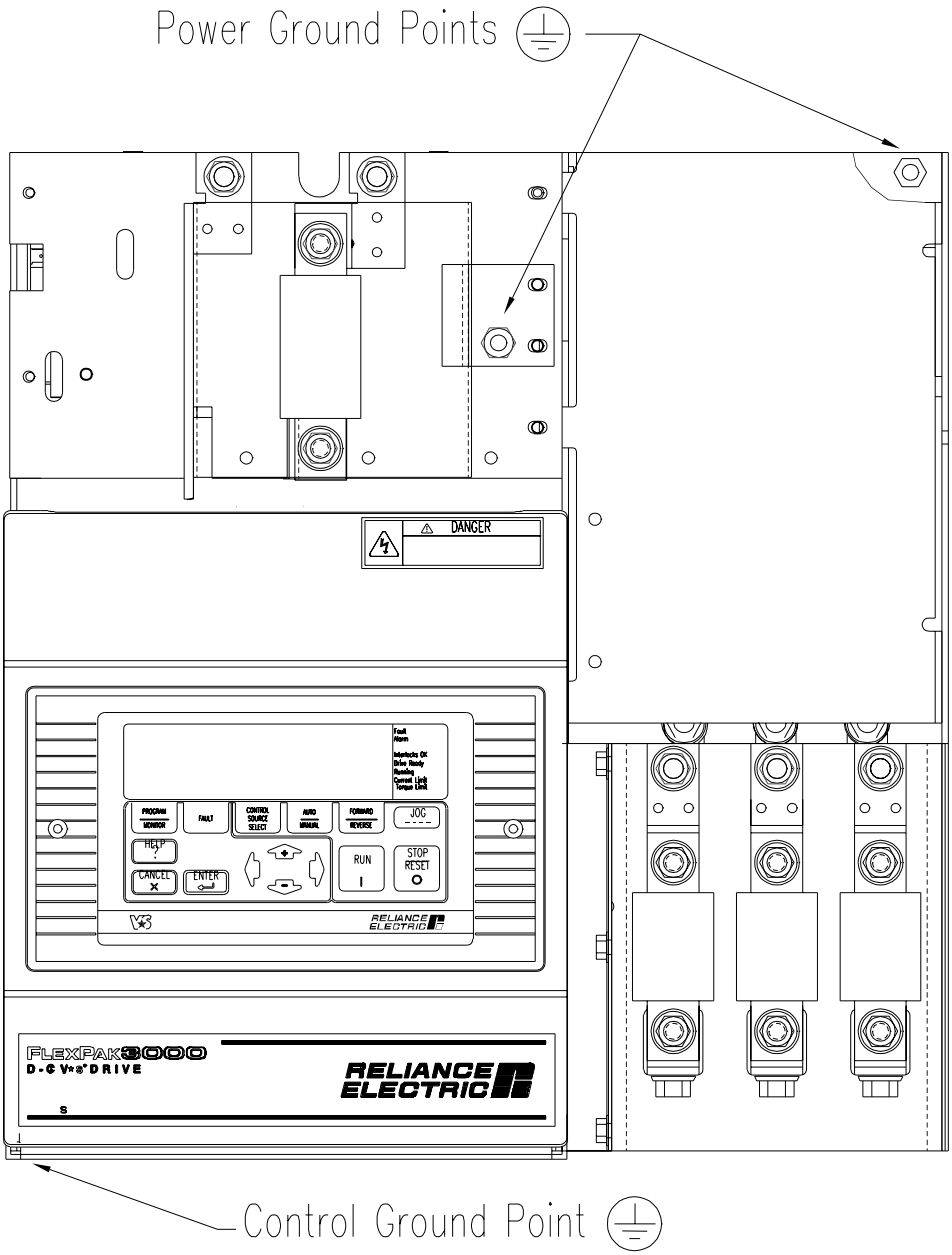

Figure 2.9 – Drive Control and Power Ground Point Locations (40 to 75 HP @ 230 VAC / 75 to 150 HP @ 460 VAC / 265 Amp Rated Output)

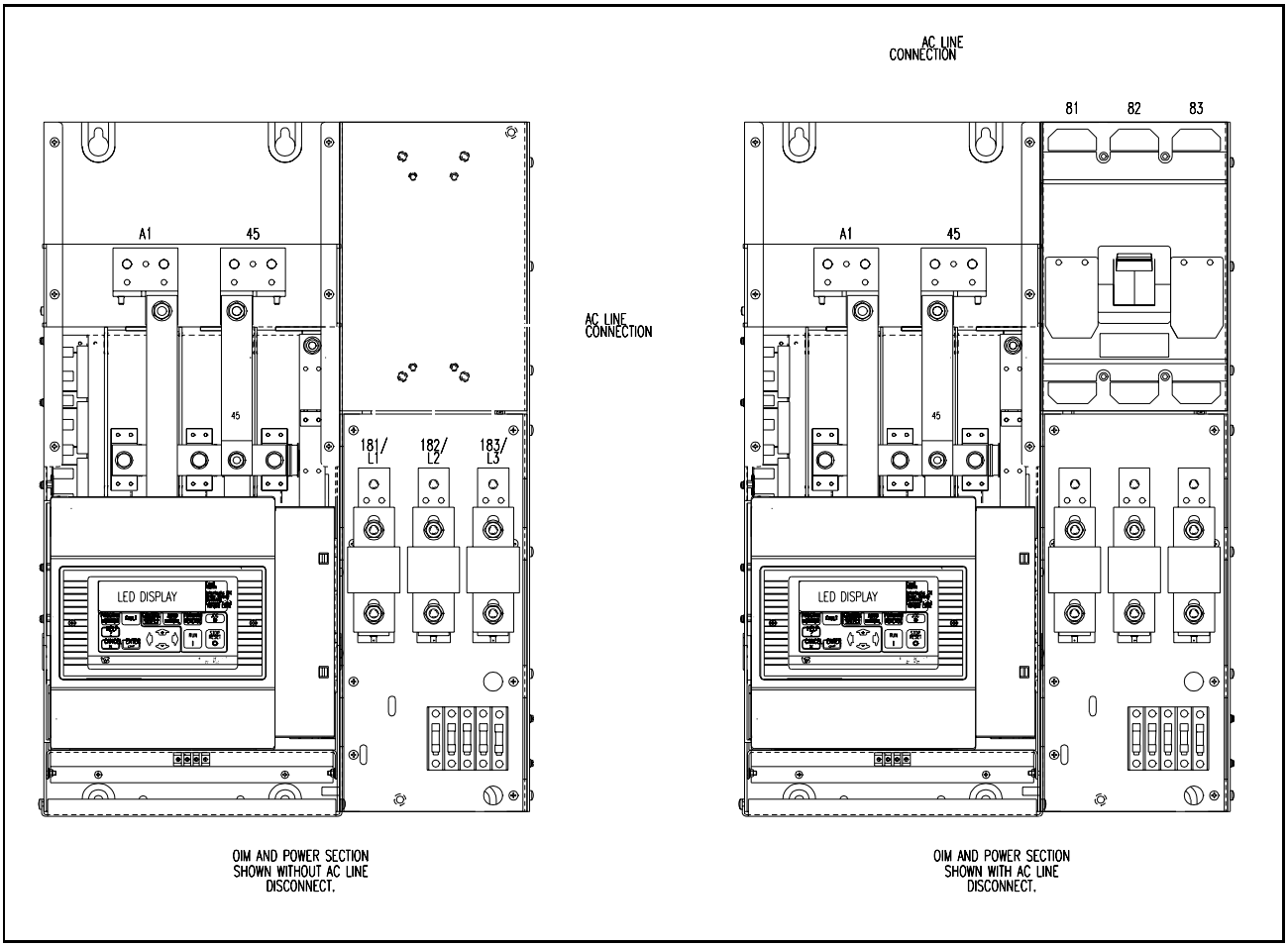

Figure 2.10 – Drive Control and Power Ground Point Locations
(100 to 150 HP @ 230 VAC / 200 to 300 HP @ 460 VAC)

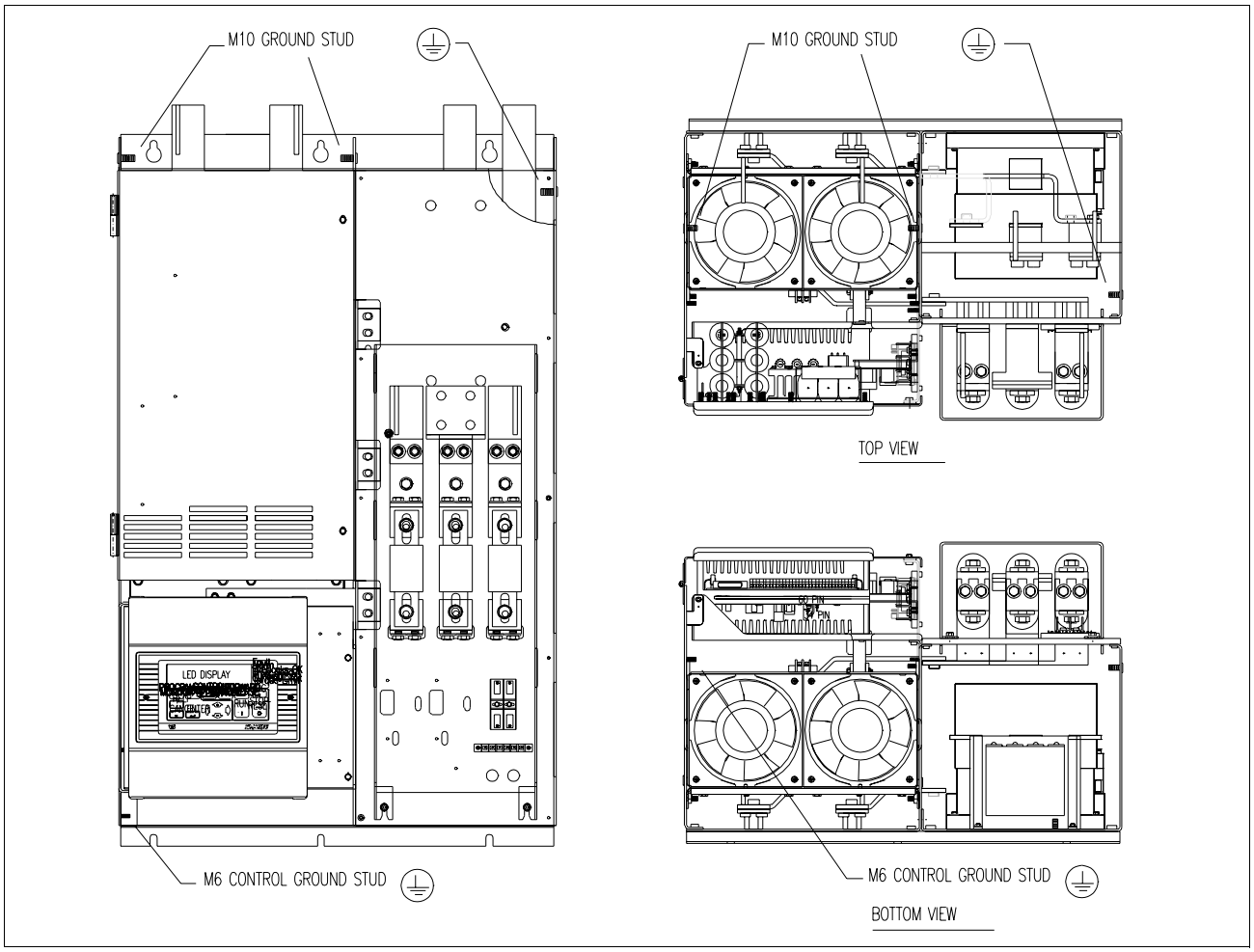

Figure 2.11 – Drive Control and Power Ground Point Locations (400 to 600 HP @ 460 VAC)

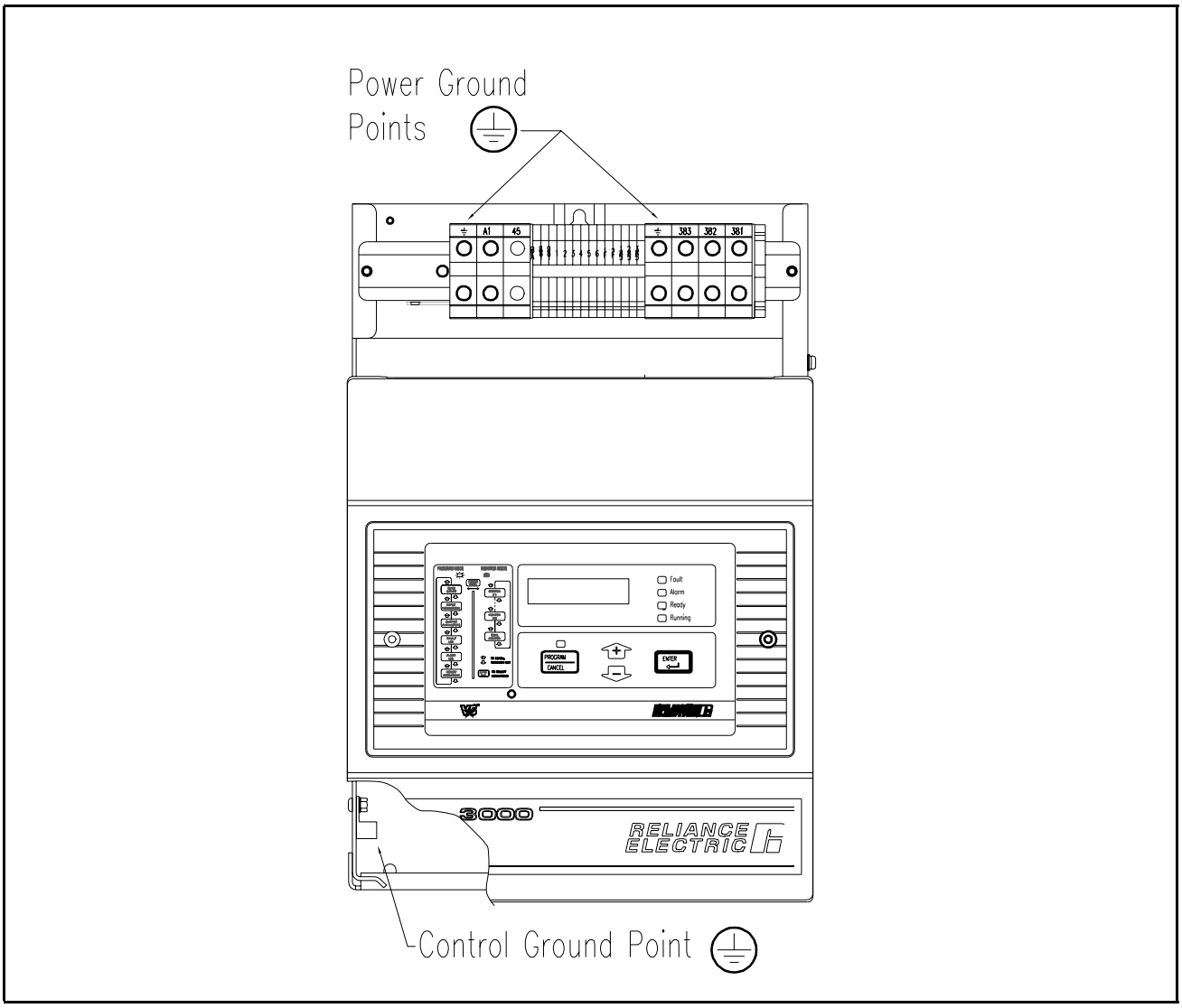

Figure 2.12 – Integrator Drive Control and Power Ground Point Locations (1.5 to 30 HP @ 230 VAC / 3 to 60 HP @ 460 VAC)

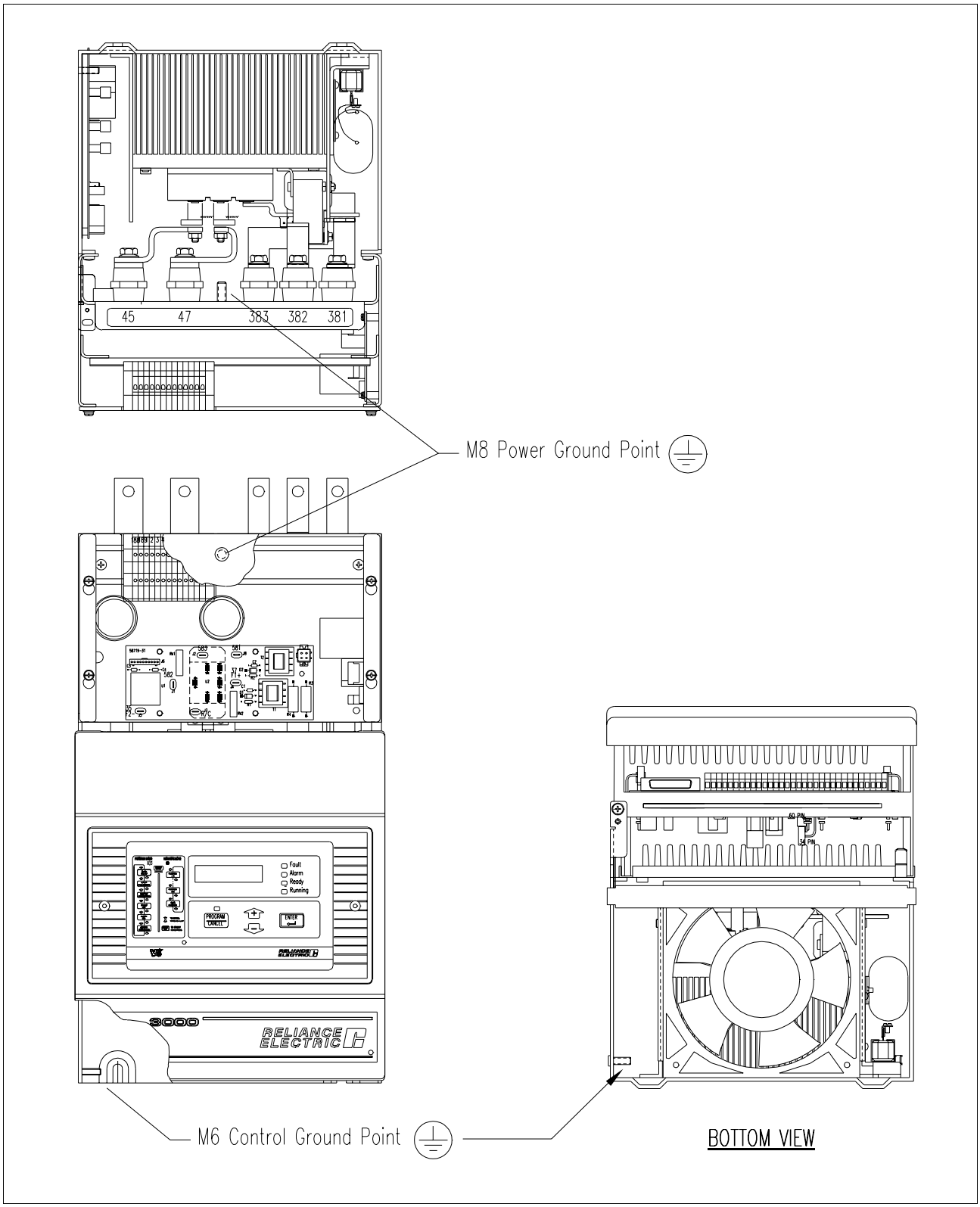

Figure 2.13 – Integrator Drive Control and Power Ground Point Locations (40 to 75 HP @ 230 VAC / 75 to 150 HP @ 460 VAC)

2.5.2 Recommended Lugs

The following describes how to interpret lug model numbers used in grounding the drive. Refer to table 2.2 for a list of recommended lug model and part numbers.

1LG 1 2 03

Basic Catalog Number

Number of Conductors
- 1 = One conductor
- 2 = Two conductors
- 3 = Three conductors

Mounting Hole and Lug Material
- 1 = One mounting hole, copper
- 2 = One mounting hole, aluminum
- 3 = Two mounting holes, copper
- 4 = Two mounting holes, aluminum
- 5 = Four mopunting holes, copper
- 6 = four mounting holes. aluminum

Lug Version Number
- 01 through 99

Table 2.2 – Recommended Lug Model and Part Numbers[1]

Model Number	Reliance Part Number	Wire Size	Mounting Hole	Material
1LG1101	68321-38AA	14 - 8 AWG	M5	Copper
1LG1102	68321-38AB	14 - 8 AWG	M6	Copper
1LG1103	68321-38AC	4 - 1/0 AWG	M10	Copper
1LG1104	68321-38AD	1/0 - 4/0 AWG	M12	Copper
1LG1105	68321-38AE	4/0 - 500 MCM	M10	Copper
1LG1201	68321-38BA	14 - 1/0 AWG	M6	Aluminum
1LG1202	68321-38BB	14 - 2/0 AWG	M6	Aluminum
1LG1203	68321-38BC	6 - 250 MCM	M8	Aluminum
1LG1204	68321-38BD	6 - 300 MCM	M6	Aluminum
1LG1205	68321-38BE	6 - 350 MCM	M10	Aluminum
1LG1206	68321-38BF	4 - 500 MCM	M10	Aluminum
1LG1207	68321-38BG	300 - 800 MCM	M12	Aluminum
1LG1208	68321-38BH	500 - 1000 MCM	M12	Aluminum
1LG2401	68321-39BA	2 - 600 MCM	M10	Aluminum
1LG2402	68321-39BB	350 - 800 MCM	M10	Aluminum
1LG2403	68321-39BC	500 - 1000 MCM	M12	Aluminum
1LG3601	68321-40BA	2 - 600 MCM	M12	Aluminum

1. Lugs are non-insulated screw type (solderless) for use with solid and stranded wire.

2.5.3 Wire AC Power to the Drive

ATTENTION: The user is responsible for conforming to the National Electric Code (NEC/CEC) and all other applicable local codes. Wiring practices, grounding, disconnects, and overcurrent protection are of particular importance. Size and install wiring in conformance with the NEC/CEC and all other applicable codes. Failure to observe this precaution could result in severe bodily injury or loss of life.

ATTENTION: The drive requires a three-phase power source of either 230, 380, 415, or 460 VAC, 50 or 60 Hz. If the correct voltage is not available, a transformer must be installed between the power source and the drive. Do not connect the drive to a power source with available symmetrical short circuit capacity in excess of the power source capacity listed in Appendix A, tables A.6 and A.7. Failure to observe these precautions could result in bodily injury or equipment damage.

Step 1. Size the AC line supply conductors for the specific drive rating and according to all applicable codes.

Step 2. Connect the AC line supply to the termination points located at the right top of the drive or to the disconnect. See figures 2.14 through 2.17.

Step 3. **(Integrator drives only)** Connect the line fuses (1FU, 2FU, 3FU), field fuses (6FU, 7FU, 8FU), and the FN contactor to the drive as shown in figure 2.18. Note that the line and field fuses must be wired as shown in figure 2.18 to ensure proper phase relationships.

Step 4. **(Integrator drives only)** Connect the AC line supply to the line fuses (1FU, 2FU, 3FU).

Step 5. Tighten incoming AC line connections per table 2.3.

Table 2.3 – AC Line Torque Recommendations

Horsepower	AC Input	
	230 VAC	460 VAC
1.5	55 lb-in (6.2 Nm)	----------
2	55 lb-in (6.2 Nm)	----------
3	55 lb-in (6.2 Nm)	55 lb-in (6.2 Nm)
5	55 lb-in (6.2 Nm)	55 lb-in (6.2 Nm)
7.5	55 lb-in (6.2 Nm)	55 lb-in (6.2 Nm)
10	55 lb-in (6.2 Nm)	55 lb-in (6.2 Nm)
15	120 lb-in (13.6 Nm)	55 lb-in (6.2 Nm)
20	120 lb-in (13.6 Nm)	55 lb-in (6.2 Nm)
25	120 lb-in (13.6 Nm)	55 lb-in (6.2 Nm)
30	120 lb-in (13.6 Nm)	120 lb-in (13.6 Nm)
40	200 lb-in (22 Nm)	120 lb-in (13.6 Nm)
50	200 lb-in (22 Nm)	120 lb-in (13.6 Nm)
60	200 lb-in (22 Nm)	120 lb-in (13.6 Nm)
75	200 lb-in (22 Nm)	200 lb-in (22 Nm)
100	200 lb-in (22 Nm)	200 lb-in (22 Nm)
125	350 lb-in (40 Nm)	200 lb-in (22 Nm)
150	350 lb-in (40 Nm)	200 lb-in (22 Nm)
200	----------	200 lb-in (22 Nm)
250	----------	350 lb-in (40 Nm)
300	----------	350 lb-in (40 Nm)
400	----------	350 lb-in (40 Nm)
500	----------	350 lb-in (40 Nm)
600	----------	350 lb-in (40 Nm)
Rated Output Amps	**AC Input**	
7A	55 lb-in (6.2 Nm)	
29A	55 lb-in (6.2 Nm)	
55A	120 lb-in (13.6 Nm)	
110A	120 lb-in (13.6 Nm)	
265A	200 lb-in (22 Nm)	

Important: The tightening torque in the table applies to the wiring device (stud or terminal board) provided. When an input or an output device (breaker or lug kit) is added, refer to the kit instructions for tightening specifications.

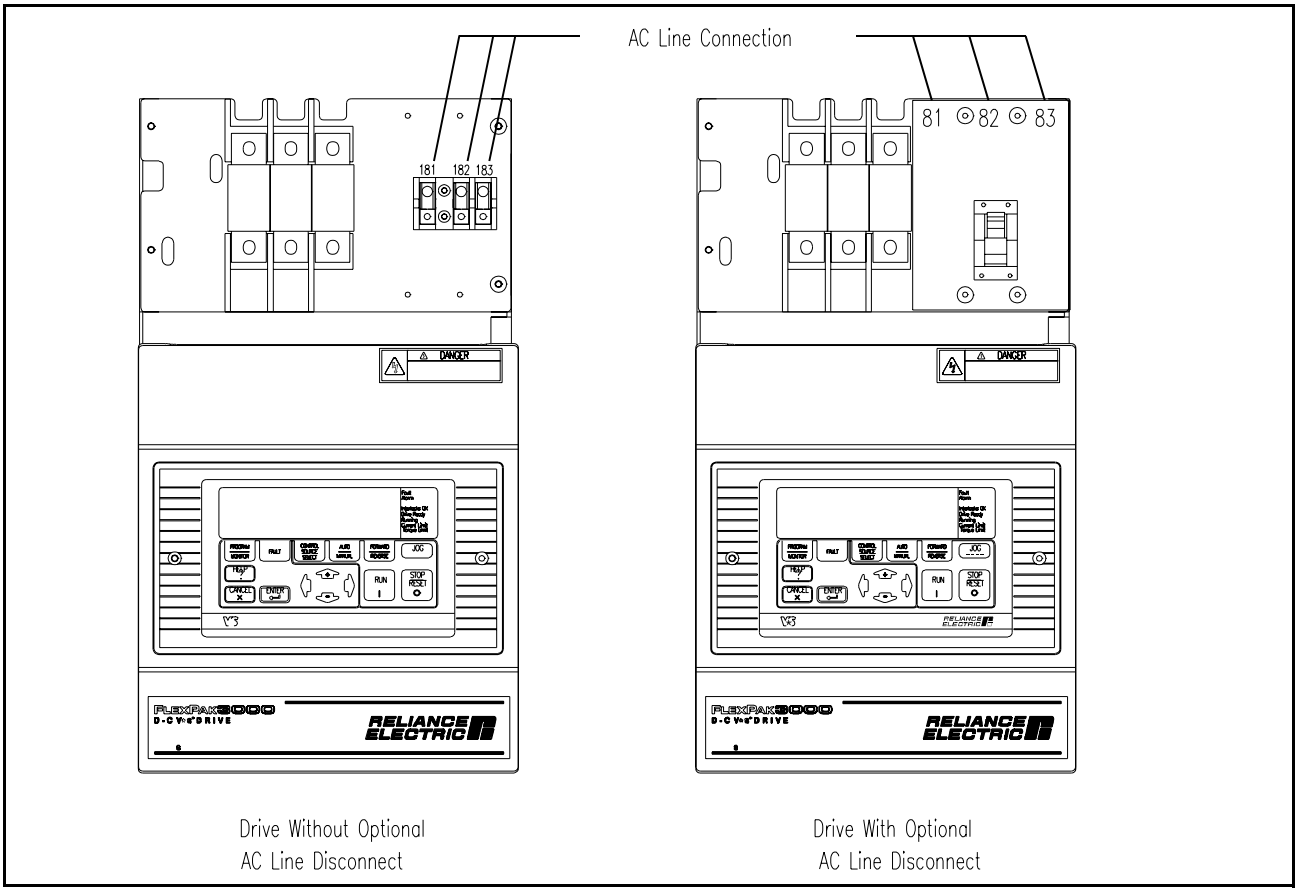

Figure 2.14 – AC Line Connection Location (1.5 to 30 HP @ 230 VAC 3 to 60 HP @ 460 VAC / 7-110 Amp Rated Output)

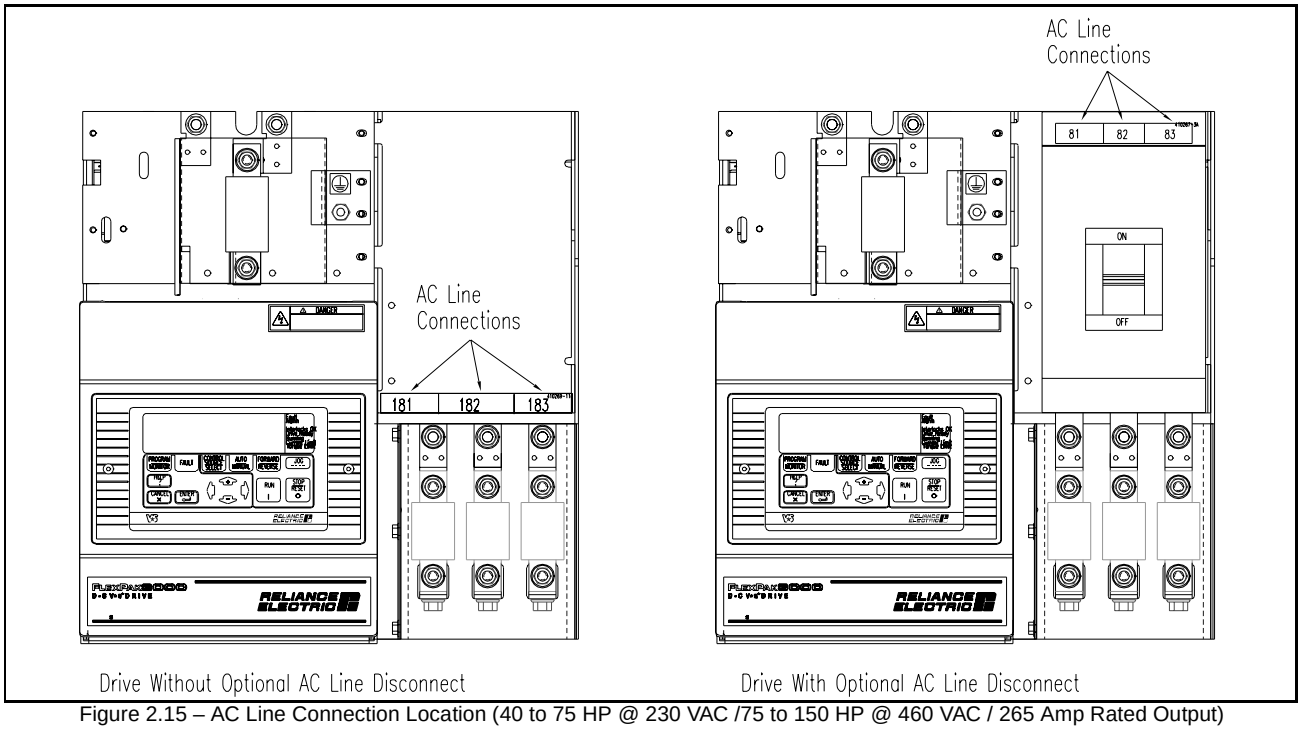

Figure 2.15 – AC Line Connection Location (40 to 75 HP @ 230 VAC /75 to 150 HP @ 460 VAC / 265 Amp Rated Output)

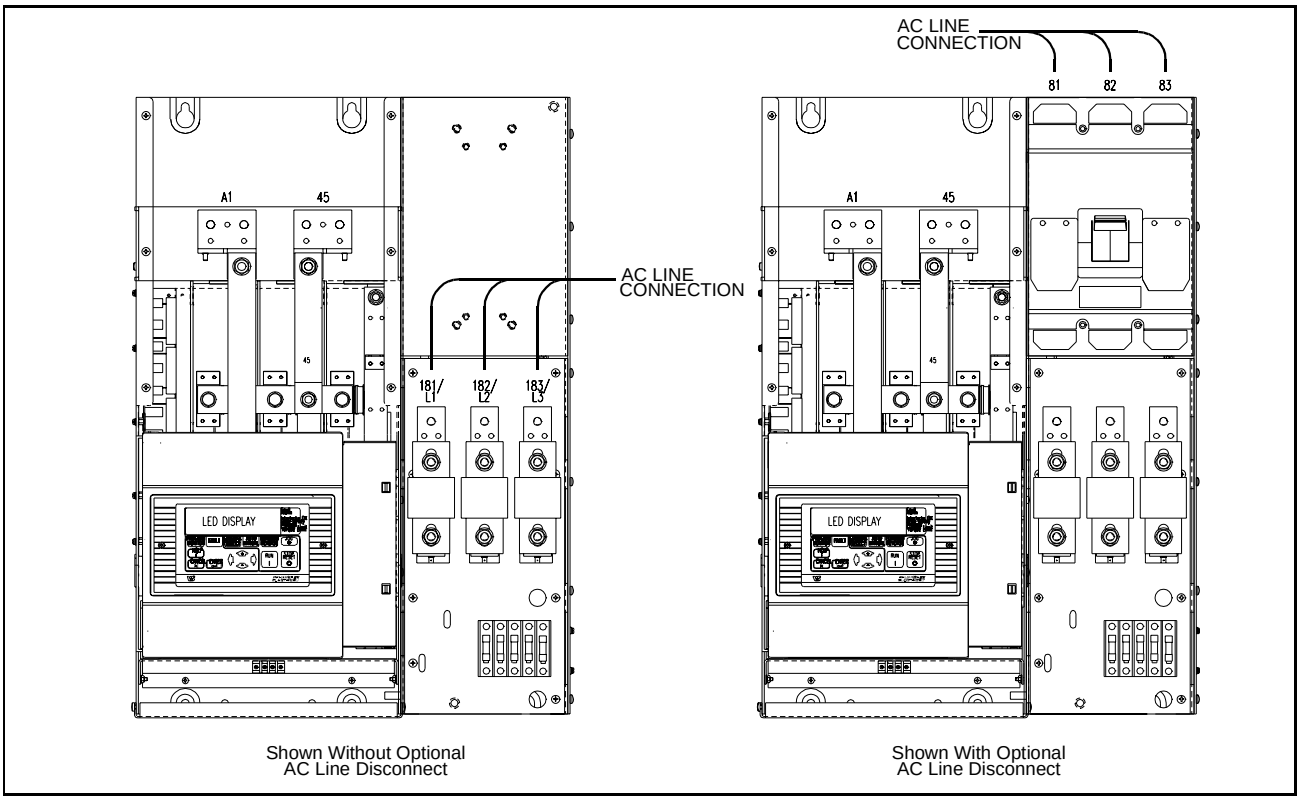

Figure 2.16 – AC Line Connection Locations (100 to 150 HP @ 230 VAC / 200 to 300 HP @ 460 VAC)

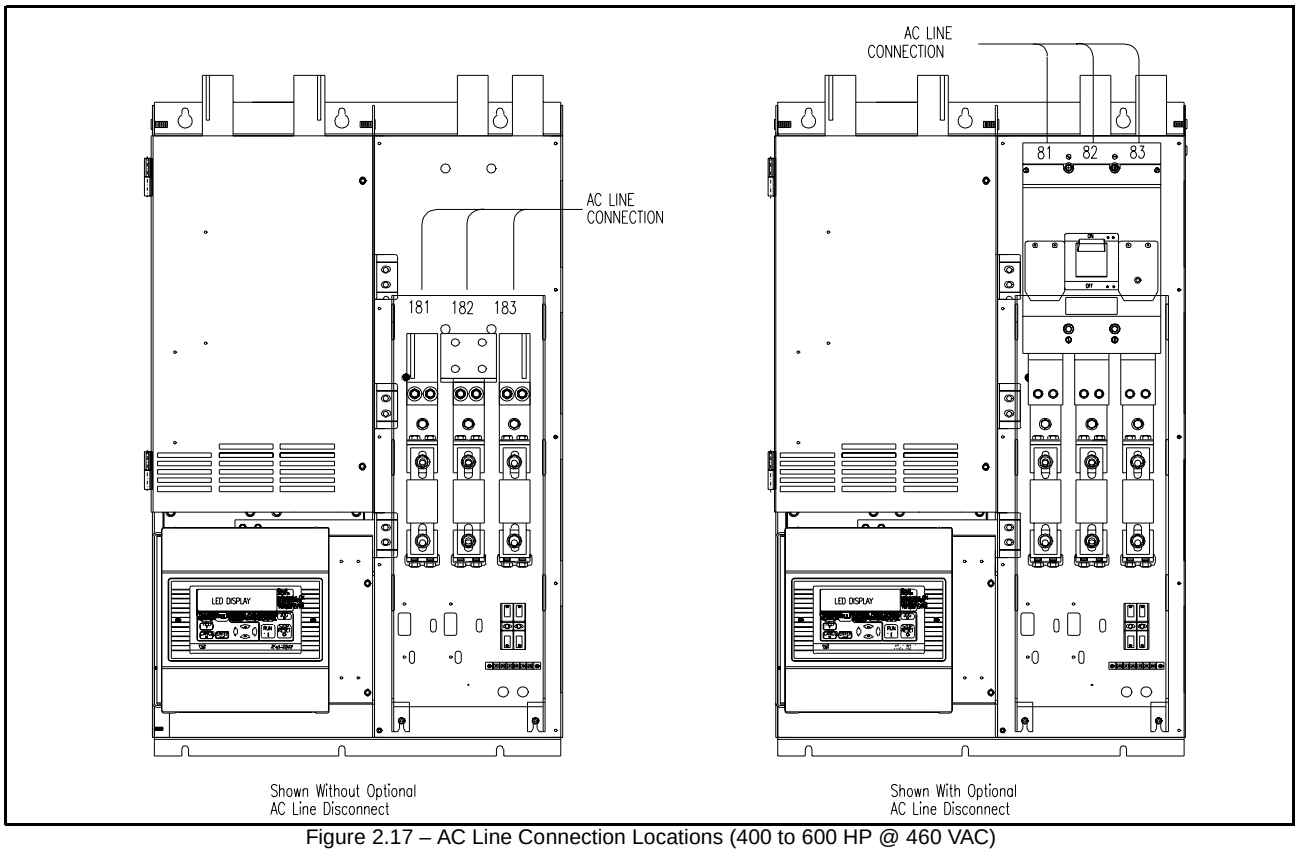

Figure 2.17 – AC Line Connection Locations (400 to 600 HP @ 460 VAC)

2.5.4 Wire the DC Motor to the Drive

Step 1. Size the motor armature circuit conductors for the specific drive rating (see Appendix A) and according to applicable codes. Use only copper wire rated 60/70°C or higher.

Step 2. Locate the DC motor armature and field supply leads on the drive. Refer to figure 2.18 to 2.21.

Step 3. Connect the DC motor armature leads and the shunt field supply leads to the drive. See figure 2.22.

Step 4. Tighten armature connections per table 2.4. Field connections should be tightened to 9 lb-in (1.0 Nm). The tightening torque applies to the wiring device (stud or terminal board) provided. When an input or output device (breaker or lug kit) is added, refer to the kit instructions for tightening specifications.

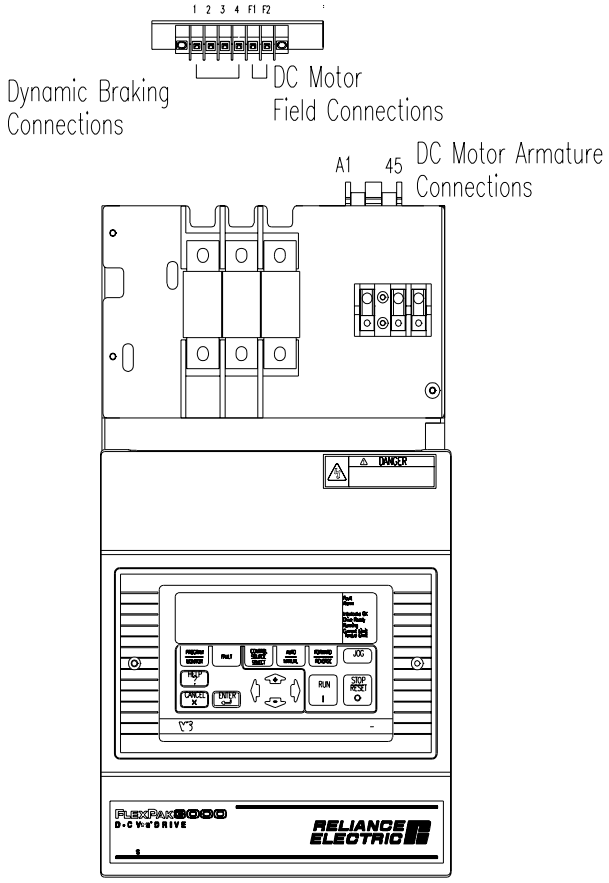

Figure 2.18 – DC Drive Motor Field and Armature Connection Locations
(1.5 to 30 HP @ 230 VAC /3 to 60 HP @ 460 VAC / 7-110 Amp Rated Output)

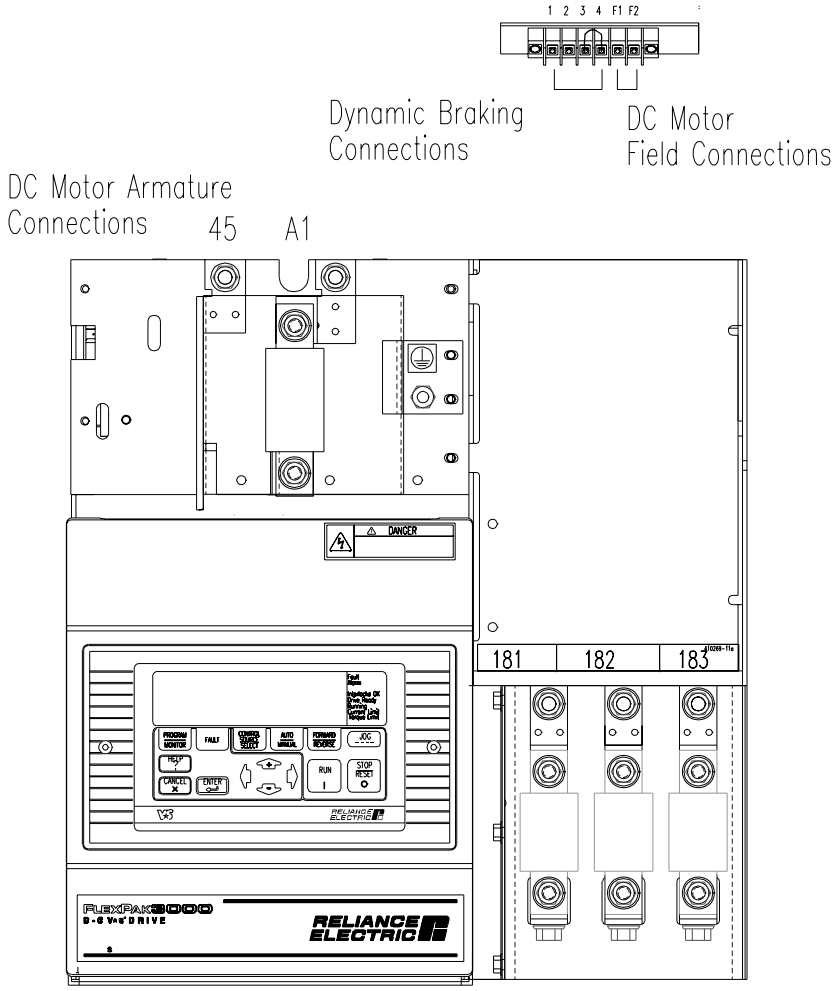

Figure 2.19 – DC Motor Field and Armature Connection Locations
(40 to 75 HP @ 230 VAC /75 to 150 HP @ 460 VAC / 265 Amp Rated Output)

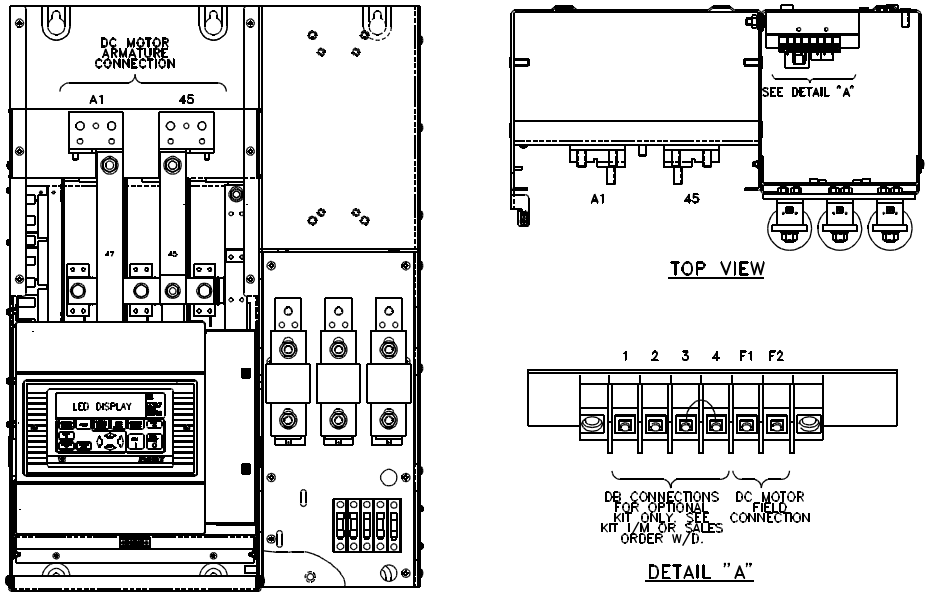

S6

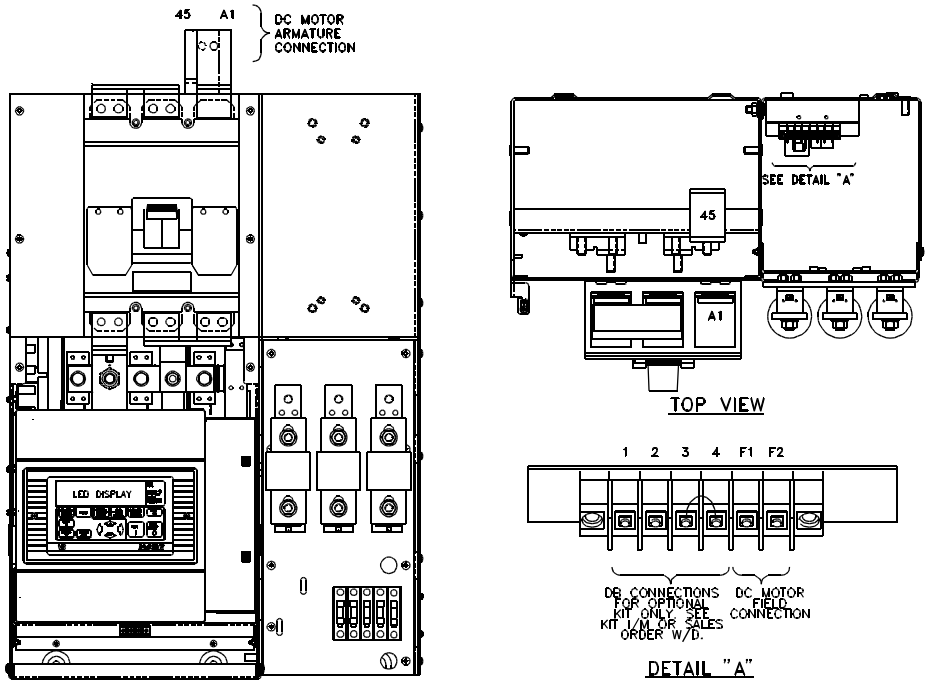

S6R

Figure 2.20 – DC Motor Field and Armature Connection Locations
(100 to 150 HP @ 230 VAC / 200 to 300 HP @ 460 VAC)

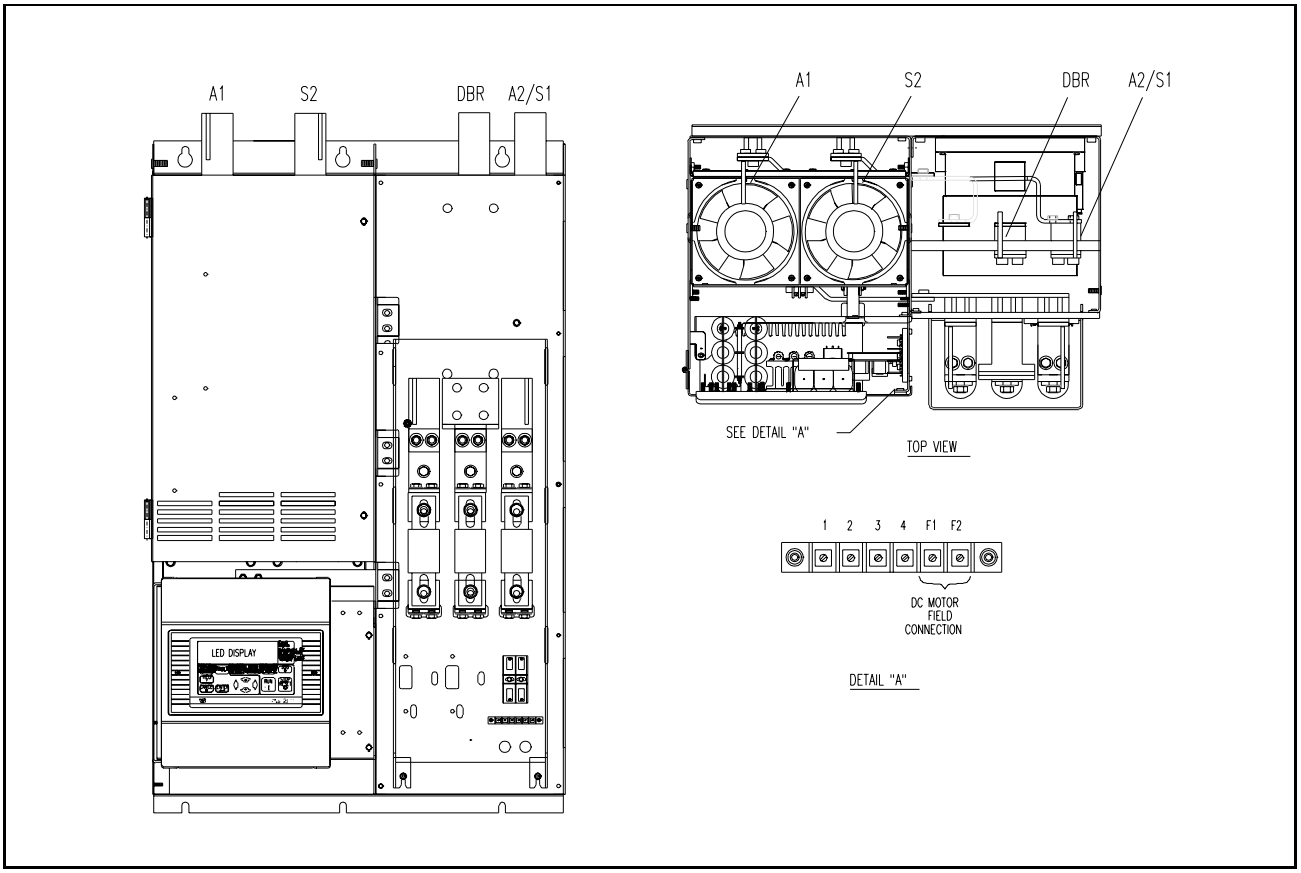

Figure 2.21 – DC Motor Field and Armature Connection Locations (400 to 600 HP @ 460 VAC)

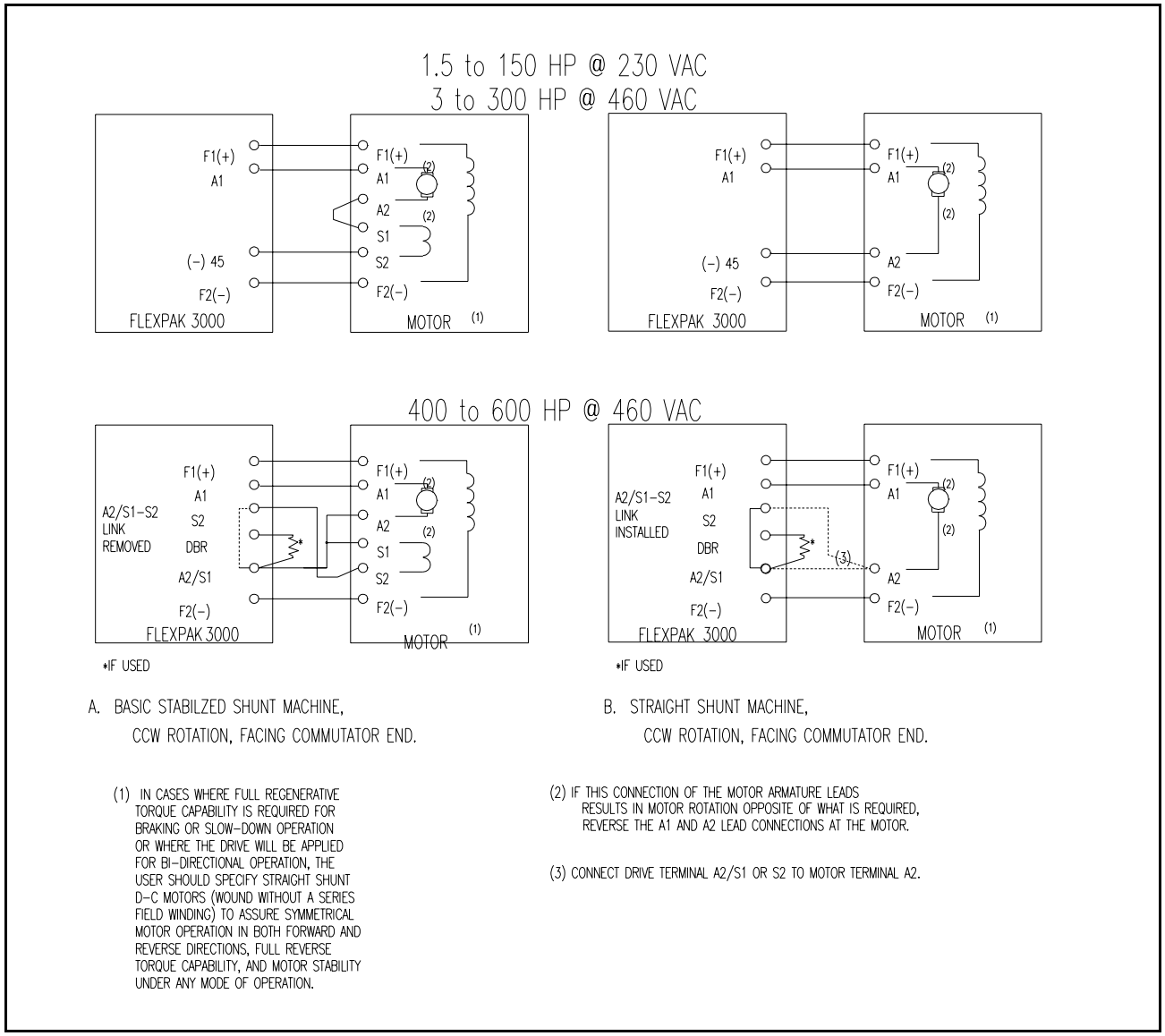

Figure 2.22 – DC Motor Connections (CCW Rotation Facing Commutator End Shown)

Table 2.4 – Armature Terminal Torqure Recommendations

Horsepower Rated Drives	Armature Terminal Torque	
	230 VAC Input	460 VAC Input
1.5	8-9 lb-in (.9-1.0 Nm)	----------
2	8-9 lb-in (.9-1.0 Nm)	----------
3	8-9 lb-in (.9-1.0 Nm)	8-9 lb-in (.9-1.0 Nm)
5	8-9 lb-in (.9-1.0 Nm)	8-9 lb-in (.9-1.0 Nm)
7.5	55 lb-in (6.2 Nm)	8-9 lb-in (.9-1.0 Nm)
10	55 lb-in (6.2 Nm)	8-9 lb-in (.9-1.0 Nm)
15	55 lb-in (6.2 Nm)	55 lb-in (6.2 Nm)
20	150 lb-in (16.9 Nm)	55 lb-in (6.2 Nm)
25	150 lb-in (16.9 Nm)	55 lb-in (6.2 Nm)
30	150 lb-in (16.9 Nm)	55 lb-in (6.2 Nm)
40	200 lb-in (22 Nm)	150 lb-in (16.9 Nm)
50	200 lb-in (22 Nm)	150 lb-in (16.9 Nm)
60	200 lb-in (22 Nm)	150 lb-in (16.9 Nm)
75	200 lb-in (22 Nm)	200 lb-in (22 Nm)
100	350 lb-in (40 Nm)	200 lb-in (22 Nm)
125	350 lb-in (40 Nm)	200 lb-in (22 Nm)
150	350 lb-in (40 Nm)	200 lb-in (22 Nm)
200	----------	350 lb-in (40 Nm)
250	----------	350 lb-in (40 Nm)
300	----------	350 lb-in (40 Nm)
400	----------	350 lb-in (40 Nm)
500	----------	350 lb-in (40 Nm)
600	----------	350 lb-in (40 Nm)
Current Rated Drives	**Armature Terminal Torque**	
7A	8-9 lb-in (.9-1.0 Nm)	
29A	55 lb-in (6.2 Nm)	
55A	55 lb-in (6.2 Nm)	
110A	150 lb-in (16.9 Nm)	
265A	200 lb-in (22 Nm)	

2.5.4.1 Wire Motor Overload Protection

A software (internal) overload is provided that meets NEC/CEC and UL/C-UL requirements. In addition to the software (internal) overload function, a DC motor thermostat can be used for motor thermal overload protection. The thermostat leads are brought out through the motor terminal box as leads P1 and P2. These two leads must be wired to the regulator board terminal strip terminals 13 and 14.

ATTENTION: The thermostat leads to regulator board terminal strip pins 13 and 14 should be routed through a separate conduit away from motor armature, field and blower motor power wiring.Failure to observe this precaution could result in regulator board damage due to improper wiring practices.

NOTE: The drive will not start if the circuit between terminals 13 and 14 is not made. See figure 2.24.

2.5.5 Wire the Stop Input

ATTENTION: The user must provide an external, hardwired emergency stop circuit outside of the drive circuitry. This circuit must disable the system in case of improper operation. Uncontrolled machine operation may result if this procedure is not followed. Failure to observe this precaution could result in bodily injury.

The FlexPak 3000 drive can be stopped by the assertion of a stop input (which can be configured as a ramp stop, a current limit stop, or a coast/DB stop), opening a permissive input (coast/DB interlock or customer interlock), deassertion of the JOG input, or in the event of a fault. Depending on the type of stop, one of two different stop sequences are executed to provide an orderly method of deactivating the armature. Previous to software version 4.0, once a stop sequence began, it ran to completion, ignoring any RUN or JOG requests received during the stop sequence.

To the sequencing algorithm, the drive is always in one of three states: armature not active (main contactor open), in run mode, or in jog mode. The drive is considered to be in “run mode” if it was started by the RUN input. The drive will remain in run mode until the completion of a stop sequence. Note that the drive can also enter the run mode from the jog mode if the RUN input is asserted while in jog mode. The drive is considered to be in “jog mode” if it was started via the JOG input. The drive will remain in jog mode until the completion of a stop sequence or the RUN input is asserted causing the drive to switch from jog mode to run mode. Note that the OIM “RUNNING” status indicates that the armature is active, either in run mode or jog mode.

Important: Only drives using software version 4.0 (and later) have the ability to terminate a ramp/current limit stop sequence. Drives using earlier versions of the software do not have this feature, and will ramp to stop before a RUN or jog request will be executed. Refer to “Stop Sequencing” in chapter 3 of the FlexPak 3000 Software reference manual for more information.

The FlexPak 3000 drive can be configured to provide a coast-to-rest operational stop without physical separation of the power source from the motor. A coast-to-rest stop turns off the thyristor power device drivers.

In addition to the operational stop, the user must provide an external, hardwired emergency stop external to the drive. The emergency stop circuit must contain only hardwired electromechanical components. Operation of the emergency stop must not depend on electronic logic (hardware or software) or on the communication of commands over an electronic network or link.

2.5.5.1 Wire the COAST/STOP Digital Input

The user must provide an external operator-accessible coast/stop pushbutton at terminals 7 and 8 on the Regulator board to disable the machine in case of improper operation. Uncontrolled machine operation might result if this is not done.

The customer interlock is a software-based stop function unless wired in series with the coast/stop input. Any safety-related stops must be wired through the coast/stop input. Use the following procedure to wire the coast/stop input.

Step 1. Remove the two screws from the drive cover. See figure 2.23.

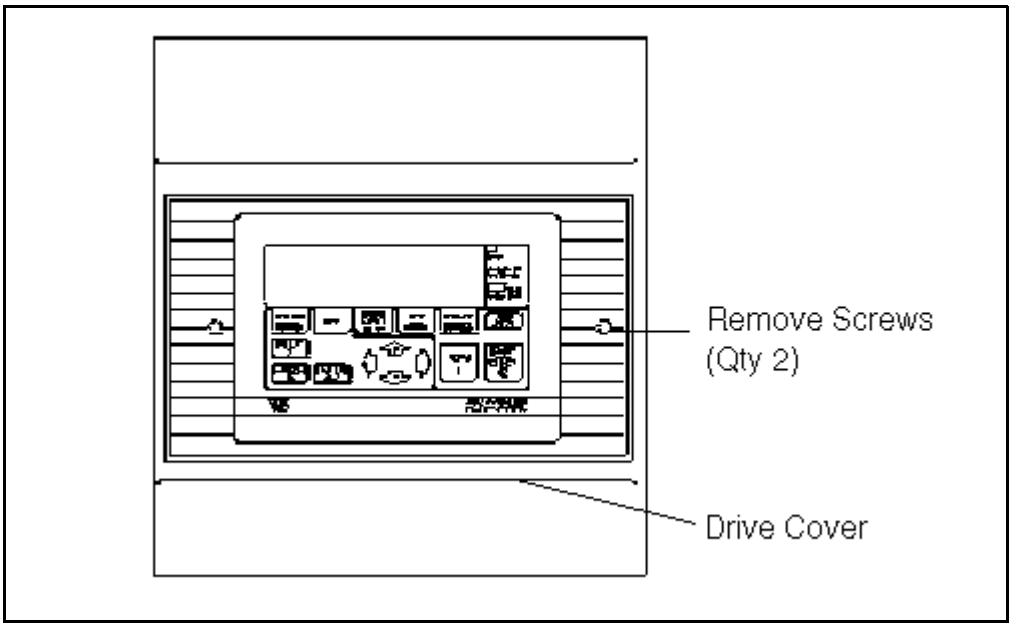

Figure 2.23 – Drive Cover Removal

Step 2. Locate the terminal strip (1 to 32) at the bottom of the regulator board. See figure 2.25.

Step 3. Connect a normally closed Coast/Stop pushbutton to terminals 7 (+24V) and 8. See figure 2.24.

Step 4. Tighten these terminal connections to a torque not to exceed 7 lb-in (0.8 Nm).

2.5.5.2 Compliance with EN 60204-1: 1992

This section applies to users who must comply with EN 60204-1: 1992, part 9.2.5.4, Emergency Stop.

In order to fully comply with EN60204-1: 1992, part 9.2.5.4, at least one of the stop methods must be a category 0 stop. See section 2.6.5 for more information.

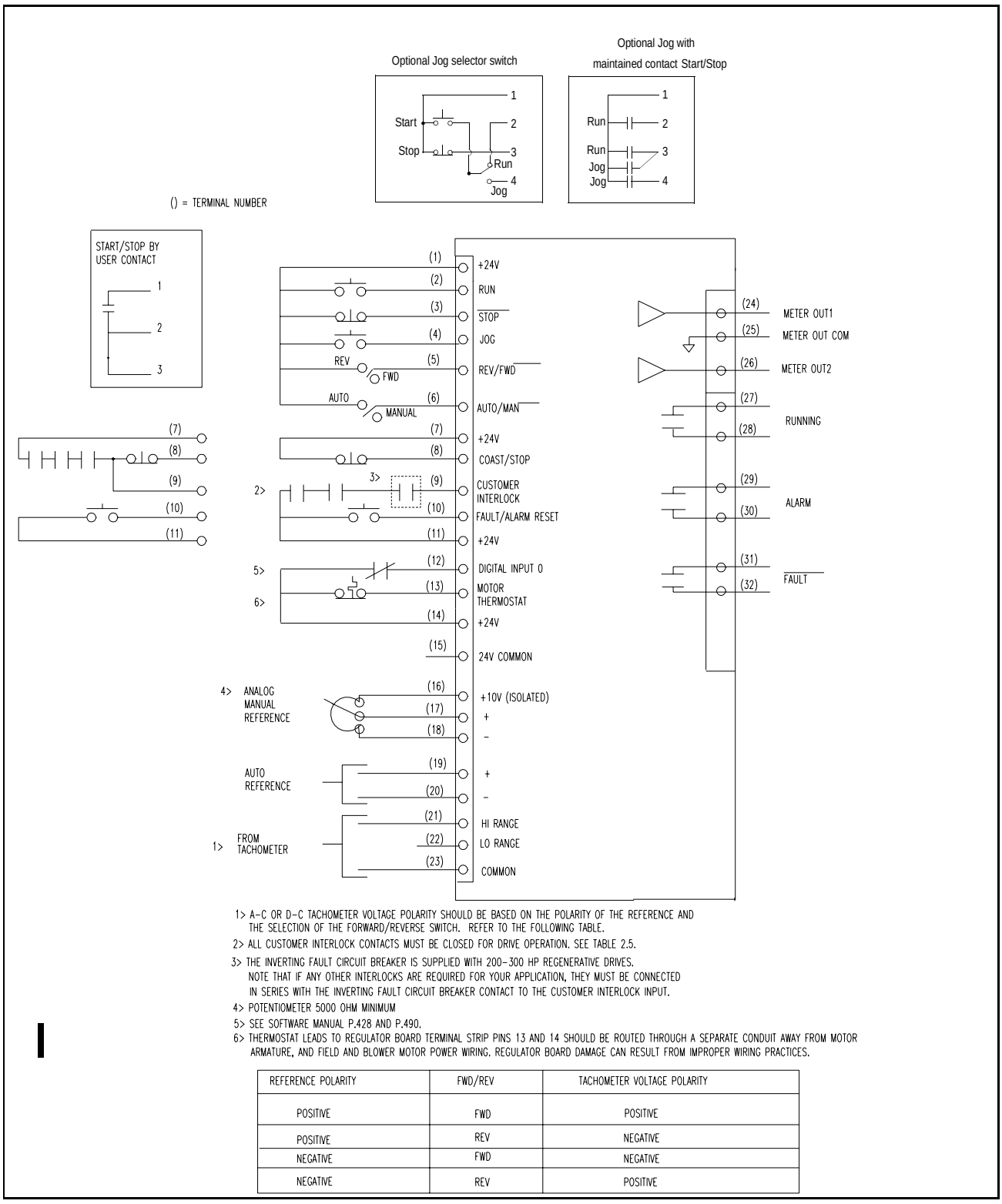

1> A-C OR D-C TACHOMETER VOLTAGE POLARITY SHOULD BE BASED ON THE POLARITY OF THE REFERENCE AND THE SELECTION OF THE FORWARD/REVERSE SWITCH. REFER TO THE FOLLOWING TABLE.

2> ALL CUSTOMER INTERLOCK CONTACTS MUST BE CLOSED FOR DRIVE OPERATION. SEE TABLE 2.5.

3> THE INVERTING FAULT CIRCUIT BREAKER IS SUPPLIED WITH 200-300 HP REGENERATIVE DRIVES. NOTE THAT IF ANY OTHER INTERLOCKS ARE REQUIRED FOR YOUR APPLICATION, THEY MUST BE CONNECTED IN SERIES WITH THE INVERTING FAULT CIRCUIT BREAKER CONTACT TO THE CUSTOMER INTERLOCK INPUT.

4> POTENTIOMETER 5000 OHM MINIMUM

5> SEE SOFTWARE MANUAL P.428 AND P.490.

6> THERMOSTAT LEADS TO REGULATOR BOARD TERMINAL STRIP PINS 13 AND 14 SHOULD BE ROUTED THROUGH A SEPARATE CONDUIT AWAY FROM MOTOR ARMATURE, AND FIELD AND BLOWER MOTOR POWER WIRING. REGULATOR BOARD DAMAGE CAN RESULT FROM IMPROPER WIRING PRACTICES.

REFERENCE POLARITY	FWD/REV	TACHOMETER VOLTAGE POLARITY
POSITIVE	FWD	POSITIVE
POSITIVE	REV	NEGATIVE
NEGATIVE	FWD	NEGATIVE
NEGATIVE	REV	POSITIVE

Figure 2.24 – Sample Regulator Board Terminal Strip Connection Diagram

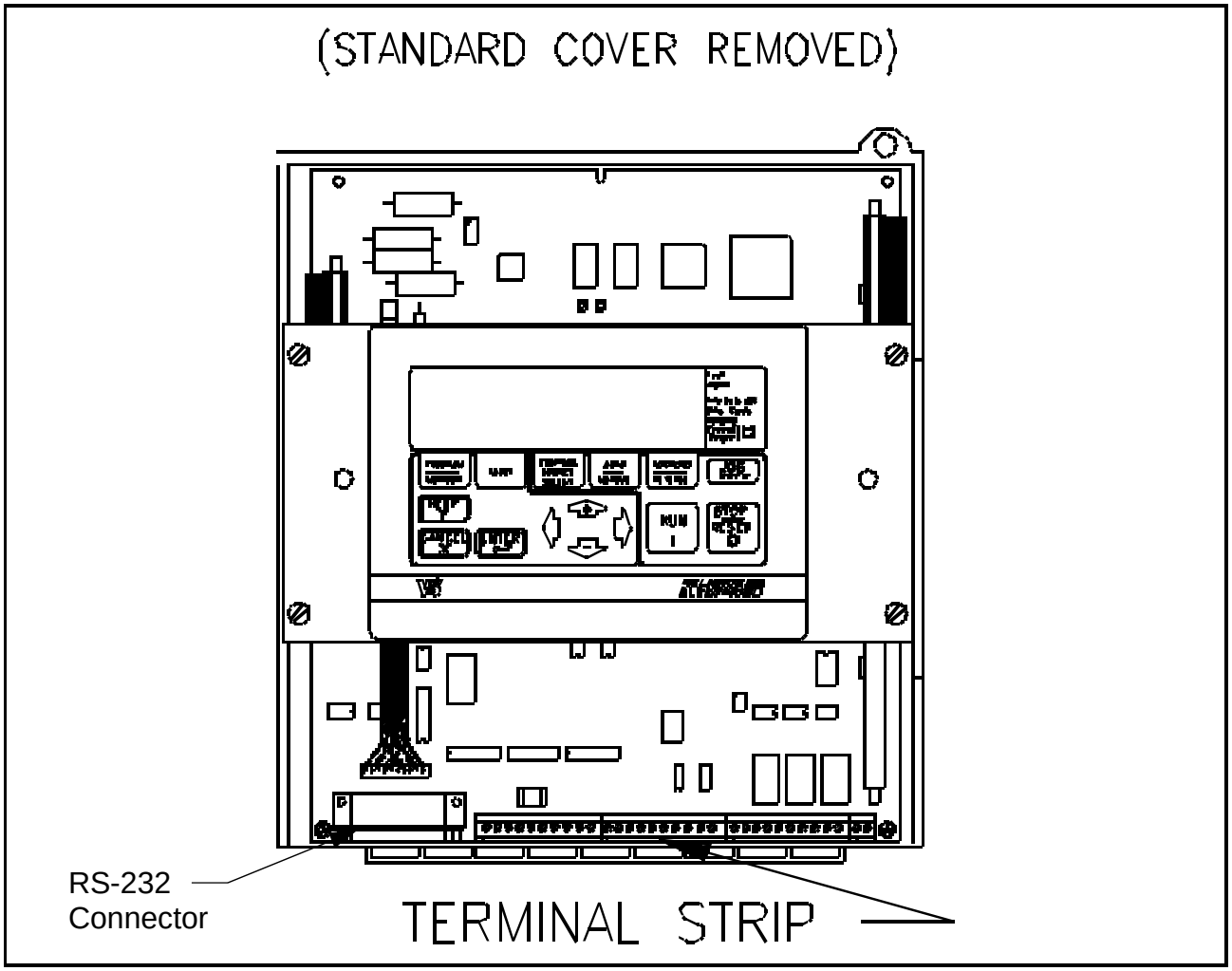

Figure 2.25 – Location of Regulator Board Terminal Strip

2.5.6 Wire Optional Devices to the Drive

ATTENTION: Do not route signal wiring with power wiring in the same conduit. This might cause interference with drive operation. Route signal wiring and power wiring in separate conduits. Failure to observe this precaution could result in damage to, or destruction of, the equipment.

Refer to figures 2.24 and 2.25 and table 2.5 when wiring optional devices to the drive. Size and install all wiring in accordance with the NEC and all other applicable local codes.

Table 2.5 – User Device Connections to the Regulator Board Terminal Strip

User Device	Regulator Board Terminal Strip Numbers
RUN	1 (+24V) and 2
STOP	1 (+24V) and 3
JOG	1 (+24V) and 4
REV/FWD	1 (+24V) and 5
AUTO/MAN	1 (+24V) and 6
INTERLOCK	9 and 11 (+24V)
FAULT/ALARM RESET	10 and 11 (+24V)
DIGITAL INPUT 0	12 and 14 (+24V)
MOTOR THERMOSTAT	13 and 14 (+24V)
SPEED REFERENCE POTENTIOMETER: • High Side (+10 ISOL) • Wiper (+ MAN REF) • Low Side (-MAN REF)	 16 17 18
AUTO REFERENCE: (+) (-)	 19 20
TACHOMETER (Analog):[1] High Range[2] Low Range[2] Common[2]	 21 22 23
METER OUTPUT 1	24 and 25 (common)
METER OUTPUT 2	25 (common) and 26
RUNNING (Indicator)	27 and 28
ALARM (Indicator)	29 and 30
NO FAULT (Indicator)	31 and 32

1. Analog tachometer must be rated between 18 and 200 Volts/1000 RPM. The output voltage must not exceed 250 V for a DC tachometer or 275 RMS for AC tachometers when the motor is rotating at the value set for the TOP SPEED parameter. To calculate the output voltage at top speed:
Tachometer Voltage at TOP SPEED = $\frac{\text{TOP SPEED}}{1000} \times \frac{\text{ANALOG TACH VOLTS}}{1000}$
See section 3.4.7 for information on jumpers J14 and J11.

2. When the maximum tach voltage at top speed is 62 VDC, use terminals 22 and 23 to connect the analog tachometer. When the maximum tach voltage at top speed is 250 VDC, use terminals 21 and 23 to connect the analog tachometer.

2.5.6.1 Logic Inputs

> **ATTENTION:** Connecting an external power source to any of the +24 volt connections (terminals 1, 7, 11, and 14) on the Regulator board terminal strip will damage the drive. DO NOT connect the external power source on the +24 volt connections on the Regulator board terminal strip. Failure to observe this precaution could result in damage to, or destruction of, the equipment.

The logic input circuits can be powered either from the internal +24 volt DC power supply or from an external +24 volt DC power source. The internal +24 volt DC power supply is available at the Regulator board terminal strip (see figure 2.16). **If an external power source is used, only the common must be connected to 24 V COM on the Regulator board (terminal 15).**

2.5.6.2 Logic Outputs

The logic output circuits are normally-open (when de-energized) relay contacts. When energized (contacts closed) the three circuits indicate the following drive conditions. Terminals are on the Regulator board terminal strip.

- Running Terminals 27 and 28
- Alarm Terminals 29 and 30
- No Fault Terminals 31 and 32

2.5.6.3 Analog Inputs

The three customer analog inputs are Manual Mode Reference, Automatic Mode Reference, and Analog Tachometer Feedback. At their full range, these inputs are converted at 12 bits plus sign.

2.5.6.4 Analog Outputs

The two metering analog outputs are available at Regulator board terminals 24, 25, and 26. Terminal 25 is the common connection for both output signals. The selected signals for both meter outputs are averaged (filtered) over 100 msec to reduce meter fluctuations.

Parameter METER OUT 1 SELECT corresponds to terminals 24 and 25. Parameter METER OUT 2 SELECT corresponds to terminals 25 and 26. Refer to these parameters in Appendix B for additional drive test points that ban be configured to source Meter Outputs 1 and 2.

CHAPTER 3

Drive Setup and Adjustment

ATTENTION: Only qualified electrical personnel familiar with the construction of this equipment and the hazards involved should install, adjust, operate, and/or service this equipment. Read and understand this section in its entirety before proceeding. Failure to observe this precaution could result in severe bodily injury or loss of life.

3.1 Perform a Power Off Inspection

Inspect the drive and modification kits for possible physical damage or improper connections.

Verify that the wiring of the operator's station and the wiring to the drive is made with sufficient bare wire to make a good electrical connection. The removal of an excessive length of insulation may needlessly expose conductors, resulting in the possibility of shorts or safety hazards.

3.2 Verify Control Transformer Tap Settings

Before input power is applied to the drive, verify that the control transformer taps are set to match the input power. Note that most FlexPak 3000 drives ship from the factory configured for 460 VAC input power (or 415 VAC for current-rated drives). These factory settings can be changed to configure the drive for 230 VAC or 380 VAC input power. The conversion procedures are described in sections 3.2.1 and 3.2.2.

3.2.1 Converting a Drive for 380 VAC Input Power

ATTENTION: 380/415 VAC-rated FlexPak 3000 drives can be configured for either 380 VAC or 415 VAC input power. Before input power is applied to the drive, verify that the control transformer taps are set to match the input power. Failure to observe this precaution could result in damage to, or destruction of, the equipment.

380/415 VAC-rated drives are shipped from the factory configured for 415 VAC line input. Wire 782 is connected to terminal H1 and wire 783 is connected to terminal H3. To configure the drive for 380 VAC operation, perform the following steps:

Step 1. Disconnect and lock out all incoming power to the drive.

Step 2. Move wire 783 to terminal H2. See figures 3.1 and 3.2 for terminal locations.

Step 3. Through the OIM, perform the Nominal AC Line Volts Adjust procedure as described in section 3.9.

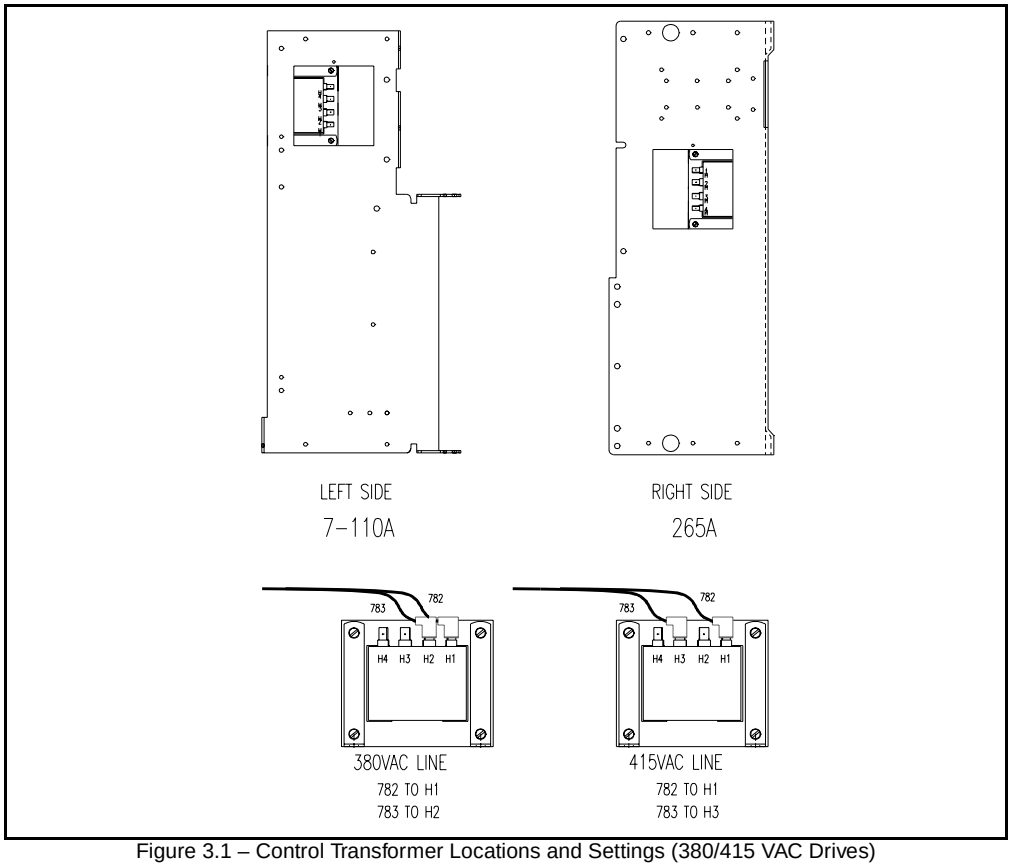

Figure 3.1 – Control Transformer Locations and Settings (380/415 VAC Drives)

3.2.2 Converting a Drive for 230 VAC Input Power

ATTENTION: 230/460 VAC-rated FlexPak 3000 drives can be configured for either 230 VAC or 460 VAC input power. Before input power is applied to the drive, verify that the control transformer taps are set to match the input power. Failure to observe this precaution could result in damage to, or destruction of, the equipment.

Most 230/460 VAC-rated drives are shipped from the factory configured for 460 VAC line input. For drives rated at less than 200 HP, a conversion kit (M/N 916FK0100 or 916FK0200) is required to convert FlexPak 3000 drives for 230 VAC line input. Drives rated at 200 HP to 300 HP can be converted to 230 VAC input power by performing the following steps. After conversion, the drive will operate at one-half the rated horsepower (200 HP @ 460 VAC will convert to 100 HP @ 230 VAC).

Important: The following procedure applies only to drives rated at 200 HP to 300 HP. Higher horsepower drives cannot be converted for 230 VAC input power.

Step 1. Disconnect and lock out all incoming power to the drive.

Step 2. Disconnect the jumpers between H2 and H3 on the control transformer. See figure 3.2 for the location of the control transformer and the terminal positions.

Step 3. Use the jumpers that were removed to connect H1 to H3 and H4 to H2, as shown in figure 3.2.

Step 4. Re-connect power to the drive.

Step 5. Through the OIM, access the NOMINAL AC LINE VOLTS parameter (P.037). Set the value to 230.

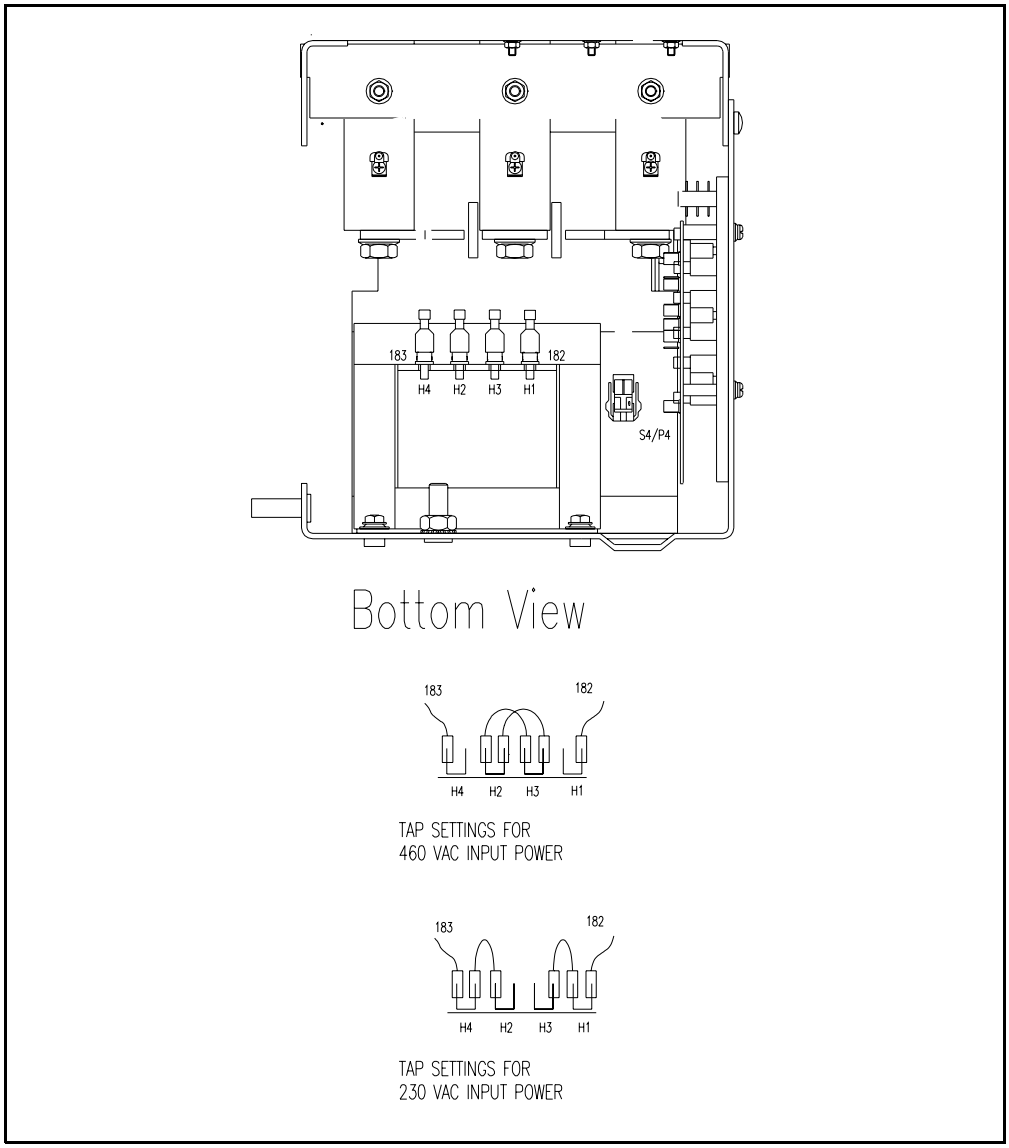

Figure 3.2 – Control Transformer Settings (230/460 VAC)

3.3 Perform a Motor Ground Check

ATTENTION: A megohmmeter can be used for this motor ground check, but all conductors between the motor and the drive must be disconnected. The megohmmeter's high voltage can damage the drive's electronic circuits. Disconnect all conductors between the motor and the drive before using a megohmmeter for this motor ground check. Failure to observe this precaution could result in damage to, or destruction of, the equipment.

The DC motor frame and conduit box should be connected to a good earth ground per the motor instruction manual.

Verify that there is no path to ground in either the DC motor armature circuit, the shunt field circuit or the thermostat circuit. Connect one lead of an ohmmeter to the motor frame and the other lead to the two armature leads, then to the two field leads and to the two thermostat leads. If a reading of less than 100,000 ohms is observed, a ground condition exists and MUST be corrected before power is applied.

3.4 Set Jumpers

ATTENTION: This equipment is at line voltage when AC power is connected to the drive. Disconnect and lock out incoming power to the drive before proceeding. After power is removed, verify with a voltmeter at power terminals 181, 182, and 183 that no voltage exists before touching any internal parts of the drive. Failure to observe this precaution could result in severe bodily injury or loss of life.

ATTENTION: Unless explicitly stated otherwise, power must be removed before changing any jumper connection. Failure to observe this precaution could result in damage to, or destruction of, the equipment.

The jumper settings for the FlexPak 3000 drive determine the regulator type, program protection, field settings, references for automatic and manual modes, tachometer voltage range, and armature feedback scaling.

There are a few guidelines for setting jumpers:

- Through the OIM, check the current jumper settings for J11, J14, and J18 in the Correct Scaling Jumper Positions menu under Drive Information. Write down these settings as displayed and make sure the actual settings match.
- Through the OIM, check the current settings for J15, J20, and J21 in the Drive Information menu. If these settings are correct for your system, you do not need to change them.

Jumpers are read only on power-up, so power must be cycled for a change to a jumper setting to be recognized by the drive.

To set the jumpers:

Step 1. Remove power from the drive.

Step 2. Remove the cover. Refer to figure 2.15 for cover removal. You do not need to remove the keypad.

Step 3. The jumpers are located on the Regulator board. See figure 3.3 for jumper locations.

Step 4. Set the jumpers as described in sections 3.4.1 through 3.4.13. Record the settings in table 3.1.

Table 3.1 – Jumper Settings

JUMPER	DEFAULT SETTING	FINAL SETTING
J15 (REGULATOR TYPE)	SPEED	
J16 (OIM PROGRAM)	ENABLE	
J20 (FIELD LOSS DETECT)	ENABLE	
J21 (FIELD SUPPLY JUMPER)	B-C	
J19 (MANUAL REF)	POT	
J14 (TACH V RANGE)	62	
J11 (TACH V SCALE)	16	
J10 (AUTO REF)	VOLTS	
J12 (AUTO REF)	VOLTS	
J18 (ARM I FB RB)	Position 4	
J26	(not used)	Jxx is not used. Do not install a shorting bar across pins of this jumper.
J27 (SPARE 1)	(not used)	
J28 (FILTER SELECT)	(not used)	
J29 (SPARE 2)	(not used)	
J30 (POWER UNIT)	LOW	

3.4.1 Set the Regulator Type (Jumper J15)

J15 determines whether the drive uses speed/voltage or torque/current regulation.

When CURRENT is selected, only the terminal strip, the DeviceNet Communication Board, or the AutoMax Network Communication Board can be used as a control source. When J15 is set to CURRENT, the drive is fixed in auto mode and cannot be changed.

Also note that speed/voltage parameters must be set to provide overspeed protection for the drive.

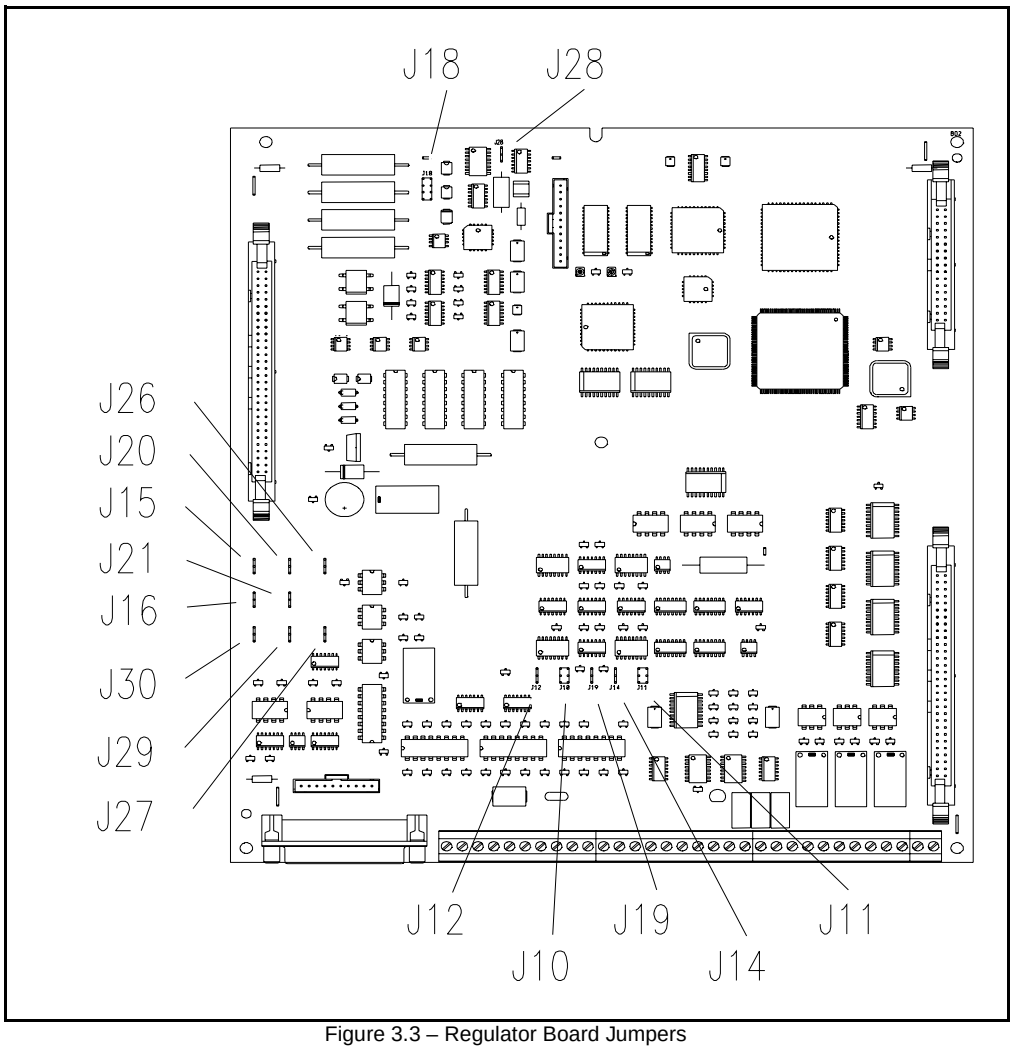

Figure 3.3 – Regulator Board Jumpers

3.4.2 Setting Program Protection (Jumper J16)

The OIM program jumper (J16) determines whether or not parameter changes can be made through the keypad (OIM). Only programming options are affected by the setting of this jumper. The OIM drive control keys (such as RUN and JOG) and the manual speed reference are not affected.

To allow keypad parameter changes, place the jumper on pins 1 and 2 (ENABLE).

To prevent parameter changes through the keypad, place the jumper on pins 2 and 3 (DISABLE). Parameters cannot be modified through the keypad. If an attempt to modify a parameter is made, the message “Hardware Password Protection is Enabled” is displayed on the keypad display.

3.4.3 Set Field Loss Detection (Jumper J20)

The FIELD LOSS DETECT jumper (J20) determines whether or not a fault is generated when a field loss occurs.

Important: Jumper J20 is ignored if the Field Current Regulator kit is installed. Therefore, placing J20 in the DISABLE position will not disable field loss detection. See I/M D2-3336 for more information on the Field Current Regulator.

ATTENTION: The user must provide external field current loss detection and inhibit drive operation via one of the drive interlocks when this jumper is positioned to DISABLE. Misapplication of this jumper can cause the motor to run at dangerously high speeds. Provide external field current loss detection and inhibit drive operation using one of the drive interlocks if this jumper is positioned to disable. Failure to observe this precaution could result in bodily injury

To detect complete loss of field current, place the jumper on pins 1 and 2 (ENABLE). When a complete loss is sensed, a fault is generated and the drive is stopped.

To ignore field loss, place the jumper on pins 2 and 3 (DISABLE). Any loss of field current is ignored. Use the DISABLE option only when no field exists, such as with a permanent magnet motor or when a separate field supply is used.

3.4.4 Set the Drive for the Enhanced Field Supply (Jumper J21)

Note that this jumper has no effect on the standard field supply or the optional Field Current Regulator kit.

The FIELD SUPPLY JUMPER (J21) determines the voltage range that the drive expects to see from the optional Enhanced Field Supply kit. Refer to I/M D2-3298 or D2-3413 for more information on the Enhanced Field Supply.

The DC voltage range can be either from 45% to 90% or from 90% to 112.5% of AC RMS line voltage.

To set the drive for a voltage range of 45% to 90%, place the jumper on pins 1and 2 (B-C).

To set the drive for a voltage range of 90% to 112.5%, place the jumper on pins 2 and 3 (A-C).

3.4.5 Set the Source for the Manual Mode Reference (Jumper J19)

ATTENTION: The drive will not operate at the correct speed if this jumper is not set to the correct position. Failure to observe this precaution could result in damage to, or destruction of, the equipment.

The MANUAL REF jumper (J19) determines whether the internal +10 V isolated power supply or an external +10 V source is used for the manual mode reference.

To use the +10V power supply for the manual reference potentiometer, place the jumper on pins 2 and 3 (POT). The supply at terminal 16 of the regulator board terminal strip is used.

To use an external +10 V source, place the jumper on pins 1 and 2 (EXT). The external reference is connected at terminals 17 and 18 of the regulator board terminal strip.

Note that this input can be used as a trim on the auto mode speed reference by setting the jumper on pins 1 and 2 (EXT).

3.4.6 Set the Voltage Range and Scale of an Analog Tachometer (Jumpers J14 and J11)

The TACH V RANGE (J14) and TACH V SCALE (J11) jumpers set the voltage range and scale of the analog tachometer.

Note: This jumper is ignored if an analog tachometer is not used and if FEEDBACK SELECT is not set to DC TACH or AC TACH.

ATTENTION: The drive will not operate at the correct speed if these jumpers are not set to the correct positions. Failure to observe this precaution could result in damage to, or destruction of, the equipment.

During the quick start procedure, the drive calculates the value of the tachometer voltage range based on the values of TOP SPEED and ANLG TACH VOLTS/1000 and the setting of FEEDBACK SELECT. The correct values are displayed on the Correct Scaling Jumper Positions screen. Verify these jumper settings before performing the self-tuning procedure.

The expected analog tachometer voltage range can be set to a maximum of 250 VDC or 62 VDC. J11 selects the hardware circuitry to maximize the resolution over the entire speed range.

Voltage	Jumpers	
	J14	J11
Top Speed Tach Volts < 16 volts[1]	LOW	16
Top Speed Tach Volts < 31 volts	LOW	31/125
Top Speed Tach Volts < 62 volts	LOW	62/250
Top Speed Tach Volts < 125 volts	HI	31/125
Top Speed Tach Volts < 250 volts	HI	62/250

1. For proper operation, minimum tach voltage must be at least 18V/1000.

Note that the output voltage of the tachometer must not exceed 250 V for DC tachometers or 275 RMS for AC tachometers when the motor is rotating at TOP SPEED. To calculate the output voltage at top speed, multiply the two parameter values:

$$\text{Tachometer Voltage at TOP SPEED} = \frac{\text{TOP SPEED}}{1000} \times \frac{\text{ANALOG TACH VOLTS}}{1000}$$

See table 2.7 for tachometer connections to the Regulator board terminal strip.

3.4.7 Set the Analog Auto Mode Reference (Jumpers J12 and J10)

The AUTOREF jumpers (J12 and J10) select the type of analog auto reference to be used when the AUTO mode is selected. J12 selects the type of signal (voltage or milliamps). J10 selects the range. See figure 3.4 for the jumper settings.

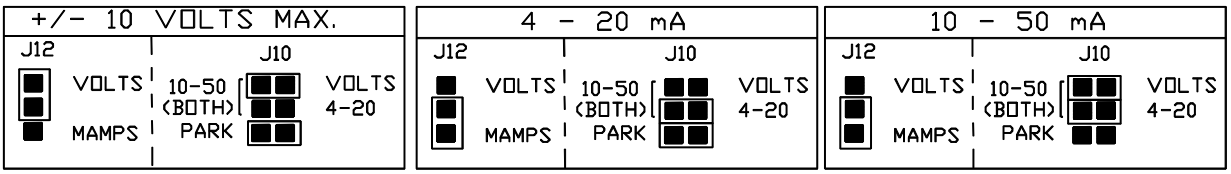

Figure 3.4 – AUTO REF Jumpers (J12 and J10)

3.4.8 Scale the Armature Current Feedback (Jumper 18)

ATTENTION: The drive will not operate at the correct speed if this jumper is not set to the correct position. Failure to observe this precaution could result in damage to, or destruction of, the equipment.

The ARM I FB RB jumper (J18) scales the armature current feedback signal. The drive calculates the value of the burden resistor needed to scale the armature current feedback signal. The calculations are based on the values of MOTOR RATED ARM AMPS, MAXIMUM CURRENT and CT Turns Ratio.

The OIM displays the correct position of the jumper during the quick start procedure. Verify this jumper setting before performing the self-tuning procedure.

3.4.9 Inspect Jumper J26

ATTENTION: Jumper J26 is for Reliance use only. The user must not change the status of this jumper. Misapplication of this jumper can cause the motor to run at dangerously high speeds. Failure to observe this precaution could result in severe bodily injury or loss of life.

J26 is intended for use by Reliance factory personnel only. Verify that it is set as listed in table 3.1.

3.4.10 Inspect the Spare 1 Jumper (J27)

J27 is not used. The position of this jumper has no effect on the drive. Verify that it is set as listed in table 3.1.

3.4.11 Inspect the Filter Select Jumper (J28)

J28 is not used. Do not install a jumper block on this jumper.

3.4.12 Inspect the Spare 2 Jumper (J29)

J29 is not used. The position of this jumper has no effect on the drive. Verify that it is set as listed in table 3.1.

3.4.13 Inspect the Power Unit Jumper (J30)

ATTENTION: The drive can operate at excessive armature voltage and speed if J30 is improperly set to the LOW position when it should be set to HI.

Important: An optional Power Interface module, for drives which are powered from a 690 Vrms AC line, is available only on drives manufactured by Reliance Electric Dierikon, Switzerland. In order to operate properly with this new power I/F module, a hardware jumper (J30) was added to the regulator board. This jumper must be set according to the type of power interface module installed in the drive. Jumper positions are labeled “LOW” and “HI”.

Jumper J30 must be set to “HI” if the drive nameplate indicates that the AC line input voltage is 690 Vrms. Otherwise, J30 must be set to “LOW”.

Improper setting of jumper J30 can cause the drive to operate at the wrong speed if configured as a voltage regulator, nuisance AC line voltage high/low alarms and incorrect armature and AC line voltage displays. J30 is not supplied with U.S. Drives.

3.5 Power Up the Drive

Apply AC power to the drive after you complete the power off inspection, motor ground check, and drive setup procedures.

See the OIM instruction manual for the displays during power-up.

3.6 Verify the Correct Direction of Motor Rotation

ATTENTION: The user must provide an external operator-accessible coast/stop pushbutton at terminals 7 and 8 on the Regulator board to disable the machine in case of improper operation. Uncontrolled machine operation might result if this is not done. Failure to observe this precaution could result in severe bodily injury or loss of life.

ATTENTION: If tachometer rotation is incorrect, sudden and rapid acceleration may result, which can cause overspeed of the drive. Failure to observe this precaution could result in bodily injury.

Step 1. Disconnect and lock out all incoming power to the drive.

Step 2. Verify the operation of the Coast/Stop pushbutton using an ohmmeter. When the pushbutton is pressed, the ohmmeter should read infinite ohms (open); when released, it should read 0 (short).

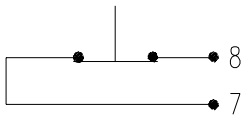

coast/stop PB closed
(released)

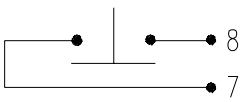

coast/stop PB open
(pressed)

Step 3. Turn power to the drive ON.

Step 4. After power-up, select ARMATURE VOLT for FEEDBACK SELECT by taking the following path from the main menu to access this parameter:

Speed/Voltage Loop (SPD)
└ Speed/Voltage Loop (SPD) Feedback

Refer to the FlexPak 3000 Software Reference manual for more information on changing parameter values.

Step 5. Initiate a JOG command to verify that the motor is rotating in the desired direction for the Forward command.

Step 6. If the direction of rotation is incorrect, stop the drive and then disconnect and lockout or tag power to the drive.

Step 7. To change the direction of motor rotation, reverse the connection of the motor armature leads A1 and A2.

Important: Wrong rotation direction can be caused by incorrect wiring of the field (F1 and F2).

3.7 Determine the DC Tachometer Lead Polarity

Step 1. Turn power to the drive ON.

Step 2. After power-up, select ARMATURE VOLT for FEEDBACK SELECT by using the following an OIM path from the main menu to access this parameter:

Speed/Voltage Loop (SPD)
└ Speed/Voltage Loop (SPD) Feedback

Refer to the FlexPak 3000 Software Reference manual for more information on changing parameter values.

Step 3. Select the forward direction (as indicated above the Forward/Reverse key on the OIM).

Step 4. Initiate a JOG command.

Step 5. Use a voltmeter on the tachometer leads to determine the lead polarity for the forward direction of rotation. Label the tachometer leads accordingly (+ and -).

Step 6. Verify that the (+) tachometer lead is connected to terminal 21 or 22, and that the (-) tachometer lead is connected to terminal 23. If the (+) tachometer lead is not connected to terminal 21 or 22, stop the drive. Disconnect and lockout or tag power to the drive. Reverse the connection of the tachometer leads.

3.8 Make Tachometer and Armature Feedback Zero Adjustments

This section describes zero adjustments that compensate for signal drift when tachometer or armature feedback is used. See the OIM instruction manual for instructions on changing these parameter values.

ATTENTION: The incorrect setting of the parameters described below can cause an overspeed condition. These parameters must be set by a qualified person who understands the significance of setting them accurately. Verify that the value of these parameters is accurate for your application. Failure to observe this precaution could result in bodily injury.

Step 1. Stop the drive.

Step 2. Check the value of the output parameter ARMATURE VOLTAGE (P.289).
If the value is 0: Go to step 5.
If the value is not zero: Go to step 3.

Step 3. Adjust ARM VOLTAGE ZERO (P.205). If ARMATURE VOLTAGE was more than 0 (positive), adjust ARM VOLTAGE ZERO to a negative value. If it was less than 0 (negative), adjust ARM VOLTAGE ZERO to a positive value.

Step 4. Repeat steps 2 and 3 until ARMATURE VOLTAGE is zero.

Step 5. Record the final value of ARM VOLTAGE ZERO in table 3.1.

Step 6. Check the value of output parameter ANALOG TACH FEEDBACK (P.291).
If the value is 0: Go to step 9.
If the value is not zero: Go to step 7

Step 7. Adjust ANALOG TACH ZERO (P.202). If ANALOG TACH FEEDBACK was more than 0 (positive), adjust ANALOG TACH ZERO to a negative value. If it was less than 0 (negative), adjust ANALOG TACH ZERO to a positive value.

Step 8. Repeat steps 2 and 3 until ANALOG TACH FEEDBACK is zero.

Step 9. Record the final value of ANALOG TACH ZERO in table 3.1.

3.9 Make Final Adjustments

Set the quick start parameters and perform drive self-tuning, as described in the OIM instruction manual.

When Quick Start and self-tuning are complete, adjust the nominal AC line frequency and volts as follows. See the OIM instruction manual for information on setting parameters.

Step 1. The default value of parameter NOMINAL AC LINE FREQ ((P.306) is 60 Hz. Adjust the frequency to the nominal value of the line frequency for your application.

Step 2. The default value of parameter NOMINAL AC LINE VOLT (P.307) is 230 VAC. Adjust the voltage to the nominal value of the line RMS voltage for your application.

CHAPTER 4

Troubleshooting/Diagnostics

ATTENTION: Only qualified electrical personnel familiar with the construction of this equipment and the hazards involved should install, adjust, operate, and/or service this equipment. Read and understand this section in its entirety before proceeding. Failure to observe this precaution could result in severe bodily injury or loss of life.

ATTENTION: This equipment is at line voltage when AC power is connected. Disconnect and lock out all ungrounded conductors of the AC power line before checking wiring. Failure to observe this precaution could result in severe bodily injury or loss of life.

This chapter details troubleshooting and diagnostics information fro the FlexPak 3000 drive.

The OIM also provides fault and alarm detection. See the OIM instruction manual (D2-3344) for information on the faults and alarms and possible corrective actions.

4.1 Check for Wiring Errors

Wiring errors and loose or grounded wiring are common problems that can inhibit operation of a drive. Verify that the wiring has been correctly installed and that the drive is free of loose terminations and grounded conductors.

4.2 Verify AC Line and Power Input

Verify that the applied AC power is correct for the specific drive. If an isolation transformer has been installed on the incoming AC power lines, verify its output voltage and that it has been properly connected. Verify that the AC line fuses have been correctly sized. The AC and DC power conductors should have been sized per the National Electric Code (NEC) or Canadian Electric Code (CEC).

4.3 Verify DC Motor Connections

ATTENTION: A megohmmeter can be used for this motor ground check, but all conductors between the motor and the drive must be disconnected. The megohmmeter's high voltage can damage the drive's electronic circuits. Disconnect all conductors between the motor and the drive before using a megohmmeter for this motor ground check. Failure to observe this precaution could result in damage to, or destruction of, the equipment.

Verify that all DC motor connections are correct.

- Recheck all motor connections for tightness and correct identification.
- Verify that there is no path to ground in either the DC motor armature circuit, the shunt field circuit or the thermostat circuit. Connect one lead of a standard ohm meter to the motor frame and the other lead to the two armature leads; then connect to the two thermostat leads, and then to the two field leads. If a reading of less than 100,000 ohms is observed, a ground condition exists and MUST be corrected before power is applied. Check that the field winding is not open or shorted.
- Verify the continuity of the motor thermostat and its proper connection to Regulator board terminals 13 and 14. If a motor thermostat has been installed, verify that its circuit maintains continuity in the terminal 13 and 14 circuit.

4.4 Verify Optional Kits

Verify that each optional kit has been installed correctly according the appropriate instructions. Refer to the appropriate instruction manuals.

4.5 Check the Regulator LED Status

Two LEDs on the Regulator board indicate the operating status of the Regulator board. The cover on the OIM must be removed to observe these LEDs. Check these LEDs when the OIM is not communicating with the regulator. Typically, there will be no fault indication on the display when the OIM is not communicating with the Regulator board. If a fault can be displayed, the fault would be OIM COMMUNICATIONS TIMEOUT (F00011).

The two LEDS are labeled CPU OK and OIM COMM OK. CPU OK will be on whenever the inputs and outputs are being scanned (I/O is not scanned during power-up diagnostics and following certain faults). OIM COMM OK will be on whenever the Regulator board and the OIM are communicating properly. The following table summarizes the possible states of the two LED indicators.

CPU OK LED	OIM COMM OK LED	Indication(s) and Action(s)
Off	Off	• No power - verify that the drive power is on; check voltages at the Regulator board. • LED failure - cycle power and verify that both LEDs illuminate briefly (lamp test). • Power-up diagnostics failed - replace the Regulator board.
	On	• Combination not used.
	Blink	• Combination not used.
On	Off	• I/O is being scanned; the regulator is not communicating with the OIM - check OIM cable; check voltages at the OIM.
	On	• I/O is being scanned; the regulator is communicating with the OIM; no faults - this is the normal condition, no action is required. • I/O is being scanned; the regulator is communicating with the OIM; diagnose/correct the fault condition and reset the fault from the selected control source fault reset. • Power-up diagnostics in progress (lamp test).
	Blink	• Combination not used.
Blink	Off	• I/O is not being scanned; the Regulator board is not communicating with the OIM; check the OIM cable or cycle power.
	On	• I/O is not being scanned; the Regulator board is communicating with the OIM; record information on the fault, press the OIM fault reset key.
	Blink	• I/O is not being scanned, the Regulator board is not communicating with the OIM; record any information about the fault and cycle power.

CHAPTER 5

Replacement Parts

ATTENTION: Only qualified electrical personnel familiar with the construction of this equipment and the hazards involved should install, adjust, operate, and/or service this equipment. Read and understand this section in its entirety before proceeding. Failure to observe this precaution could result in severe bodily injury or loss of life

ATTENTION: .This equipment is at line voltage when AC power is connected. Disconnect and lock out all ungrounded conductors of the AC power line before checking wiring. Failure to observe this precaution could result in severe bodily injury or loss of life.

ATTENTION: Replacing fuses with different ratings other than the ratings supplied with the original equipment can cause damage to the equipment. Replace fuses only with the same current, voltage, and class rating as supplied with the original equipment. Failure to observe this precaution could result in damage to, or destruction of, the equipment.

The spare or replacement parts for drives described in this manual are also listed in Replacement Parts manual D2-3438, available on www.reliance.com at http://www.reliance.com/prodserv/standriv/dc/flexpak/manuals.htm.

Replacement parts are available from your local Reliance Electric Distributor or direct from Reliance Electric Company:

Order Entry Phone: 1-864-284-5202

APPENDIX A

Technical Specifications

Table A.1 – Voltage and Current Ratings

Input Voltage and Frequency Ratings	
Nominal Voltage	230 VAC ± 10% or 460 VAC ± 10% (horsepower-rated drives) 385 VAC ± 10% or 415 VAC ± 10% (current-rated drives)
Nominal Line Frequency	50 Hz or 60 Hz
Frequency Variation	2 cycles of nominal
AC Line Fault Capacity	
Maximum Symmetrical Fault Current	See table A.6
AC Line KVA	
AC Line Distribution Capacity	Maximum of 3 drives per transformer
Minimum Source KVA	See table A.6
DC Voltage Ratings	
230 VAC Line: Armature Voltage Field Voltage[1]	 240 VDC 150 VDC
460 VAC Line: Armature Voltage Field Voltage[1]	 500 VDC 300 VDC
380 VAC Line: Armature Voltage Field Voltage[1]	 413 VDC 250 VDC
415 VAC Line: Armature Voltage Field Voltage[1]	 451 VDC 270 VDC

[1]Field voltages shown are nominal values. DC field voltages up to 1.125 times AC line voltage are available with the optional enhanced field supply, M/N series 923FKxxxx.

Table A.2 – Service Conditions

Service Factor	1.0 continuous
Overload Capacity	150% of full load for 1 minute
Motor Overload Function	Drive uses an internal inverse time thermal overload based on motor amp measurement and full load motor rated amps parameter entry.
Minimum Load	5% of rated load
Ambient Temperature: Chassis (inside cabinet) Cabinet (external)	 0° to 55°C (32° to 131°F) maximum 0° to 40°C (32° to 104°F) maximum
Altitude: Chassis and Cabinet	3300 feet above sea level (Derate 3% for every 1000 ft above 3300 ft up to 10,000 ft)

Table A.3 – Drive Regulation

Regulation Arrangement	**Speed Change with 95% Load Change**	**Speed Change from All Other Variables**	**Kit Model Number**
Armature Voltage w/ IR Compensation	2-3%	15%	Not applicable
Closed Loop w/ RE-045 tach[1] w/ 5PY tach[2] w/ RD-120-1 tach[3] w/ RD-120-2 tach[3] w/ RD-62 tach[3]	 1% 1% 0.01% 0.01% 0.01%	 2% 2% 0.01% 0.01% 0.01%	 907FK0301 907FK011 907FK011 907FK011

[1] Optional AC Tachometer Feedback kit required (see instruction manual D2-3297)
[2] Standard DC Tachometer (see section 2.8.6 if used)
[3] Optional Pulse Encoder Feedback kit required (see instruction manual D2-3302)

Table A.4 – Speed Range

Operator's Speed Adjustment	0 to rated speed
Specification Speed Range	100:1 based on top speed and tachometer

Table A.5 – Drive Efficiency

Drive Only	98.6% (rated load and speed)
Drive and Motor	85% typical (depends on motor operating speed and frame size)

Table A.6 – Power Ratings[1] (230/460 VAC)

HP	Full Load Rated RMS AC Line Current (Amperes)		Full Load Rated DC Armature Current (Amperes)		Rated Field Current (Amperes)		Maximum Symmetrical AC Fault Current (Amperes)		Min. Source KVA
	230 VAC	460 VAC	240 VDC	500 VDC	150 VDC	300 VDC	230 VAC	460 VAC	
1.5	10	—	7	—	10	—	5000	—	4
2	11	—	9	—	10	—	5000	—	5
3	13	10	12	6	10	10	5000	5000	6
5	19	12	20	10	10	10	5000	5000	7.5
7.5	26	15	29	14	10	10	5000	5000	11
10	33	18	38	19	10	10	5000	5000	15
15	48	24	55	27	10	10	5000	5000	20
20	63	31	73	35	15	10	10000	5000	27
25	80	39	93	45	15	10	10000	5000	34
30	94	45	110	52	15	10	10000	5000	40
40	125	63	146	73	15	15	25000	10000	51
50	154	74	180	86	15	15	25000	10000	63
60	186	86	218	100	15	15	25000	10000	75
75	226	110	265	129	15	15	25000	25000	93
100	307	143	360	167	15	15	30000	25000	118
125	370	177	434	207	15	15	30000	25000	145
150	443	213	521	250	15	15	30000	25000	175
200	—	281	—	330	—	15	—	30000	220
250	—	351	—	412	—	15	—	30000	275
300	—	421	—	495	—	15	—	30000	330
400	—	567	—	667	—	15	—	75000	440
500	—	680	—	800	—	15	—	75000	550
600	—	816	—	960	—	15	—	75000	660

[1] When applying FlexPak 3000 drives to a power distribution system with KVA capacity in excess of 5 times the smallest drive rating, the use of an isolation transformer or line reactors of similar impedance is required. Note also that the drives are designed for a maximum of three units per transformer.

Table A.7 – Power Ratings[1] (380/415 VAC)

Unit Type	Input Voltage (VAC)	Full Load Rated RMS AC Line Current (Amperes)	Full Load Rated DC Armature Current (Amperes)	Rated Field Current (Amperes)	Maximum Symmetrical AC Fault Current (Amperes)	Min. Source KVA	Reference HP @ 460 VAC Input[2]
7 A	380/415	10	7	10	5000	4/5	3
29 A	380/415	26	29	10	5000	16/18	15
55 A	380/415	48	55	10	5000	33/36	30
110 A	380/415	94	110	15	10000	62/68	60
265 A	380/415	226	265	15	25000	145/157	150

[1] When applying FlexPak 3000 drives to a power distribution system with KVA capacity in excess of 5 times the smallest drive rating, the use of an isolation transformer or line reactors of similar impedance is required. Note also that the drives are designed for a maximum of three units per transformer.

[2] This drive is not rated for 460 VAC input. Horsepower is provided for reference only and should not be used for rating or scaling purposes.

Table A.8 – Logic Inputs

Input Voltage	+24 VDC
Turn On Voltage	+8 VDC
Turn off Current	0.5 mA
Common	All input circuits have the same common.

Table A.9 – Logic Outputs

Operating Voltage	250 VAC maximum 30 VDC maximum
Switching Current	2 A maximum resistive 1 A maximum inductive

Table A.10 – Analog Inputs

Manual Mode Reference Potentiometer External Voltage Source	5 KΩ minimum ±10 VDC (when used for analog trim reference) 0 to 10 VDC (when used for manual mode speed reference)
Automatic Mode Voltage Reference Current Reference	±10 VDC 4 to 20 mA or 10 to 50 mA
Analog Tachometer Feedback Tach Voltage at Top Speed	10 to 250 VDC

Table A.11 – Analog Outputs

Output Voltage	±10 VDC
Maximum Load	4 mA

APPENDIX B

Compliance with European Union Electromagnetic Compatibility Standards

This appendix provides information on installing FlexPak 3000 drives for compliance with European Union Electromagnetic Compatibility (EMC) Standards. It covers:

- requirements for standards compliance.
- guidelines on installing the AC mains filter and inductor.
- instructions on how the drive must be installed, wired, and grounded for compliance. These instructions are in addition to the normal installation instructions.

Important: This appendix is not applicable to FlexPak 3000 drives rated above 300 HP @ 460 VAC. These drives are not designed to be CE-compliant.

B.1 EMC Compliance Requirements

For the FlexPak 3000 drive to conform to the standards listed on the Declaration of Conformity (DOC), the drive must:

- be accompanied by the DOC for that drive. If you need a copy of the DOC, call the Autofax product information system at 440-646-7777 and request the FlexPak 3000 DOC.
- be specified by model number on the DOC.
- have a CE mark, which is below the drive nameplate.
- be mounted and wired on the conductive, non-coated back panel of an electrical cabinet.
- include an AC mains filter and inductor as specified in this appendix.
- be installed according to the instructions in this appendix.
- be operated with the electrical cabinet doors closed.

Important: Conformity of the FlexPak 3000 Drive does not guarantee that the entire installation will be in conformance.

B.2 Selecting the Equipment

In addition to the drive, you will need the following to install the drive for CE compliance:

- AC mains filter
- AC mains inductor
- Electrical cabinet with back mounting panel

B.2.1 Selecting a Mounting Panel and Electrical Cabinet

The FlexPak 3000 drive, AC mains filter, AC mains inductor, and any other electronic or electrical equipment must be mounted in an electrical cabinet. The back mounting panel where this equipment is mounted must have a good electrically conductive surface, such as aluminized cold-roll steel, Galvalume, or galvanized steel. It must be free of any insulating coatings, such as varnish or paint. This establishes a good ground plane for the mounted equipment.

The degree of enclosure does not play a significant role in the containment of RF emissions. The cabinet can have ventilation louvers or openings for filters and fans. None of these openings, however, can be located within a zone 10 inches above and below the height of the drive, as shown in figure B.1.

B.2.2 Selecting an AC Mains Filter

AC mains filters limit the conducted electromagnetic emissions to the AC power mains from the FlexPak 3000 drives.

Tables B.1 and B.2 list the FlexPak drives, full load amps, inductance, and the Reliance AC Mains Filter model number required for each drive. The inductance is the minimum input inductance for 2% impedance, assuming a 5 to 6% source impedance.

B.2.3 Selecting an AC Mains Inductor

An AC mains inductor must be installed between the mains filter and the AC power input of the FlexPak 3000 drive. The inductor is user-supplied. The inductor provides the impedance required by the mains filter, as shown in tables B.1 and B.2. This inductor also limits the SCR line commutation notch to less than 80% when the drive is connected to a 5 to 6% impedance source. This meets the requirements of DIN 160 Line Notching.

If the drive is to be used in an overload condition, an inductor must be chosen that is rated for the resulting average RMS current and that will not saturate during overload.

Table B.1 – AC Mains Filter Model Numbers for 1.5 to 150 HP @ 230 VAC FlexPak 3000 Drives

HP Rating	AC Full Load Amps	Minimum Inductance (in microhenries (μH))	AC Mains Filter Model Number	AC Mains Inductor
1.5	10	850	3DF4353	608895-63H
2	11	770	3DF4353	608895-63H
3	13	650	3DF4353	608895-63K
5	19	470	3DF4354	608895-63K
7.5	26	340	3DF4354	608895-63M
10	33	255	3DF4355	608895-63P
15	48	175	3DF4355	608895-63R
20	63	135	3DF4357	608895-63W
25	80	105	3DF4357	608895-63W
30	94	90	3DF4357	608895-63Y
40	125	67	3DF4359	608895-63AA
50	154	55	3DF4359	608895-63AC
60	186	45	3DF4359	608895-63AE
75	226	38	3DF4359	608895-63AG
100	307	27	3DF4359	608895-63AK
125	370	23	Two 3DF4359 filters connected in parallel	608895-63AN
150	443	19		608895-63AR

Table B.2 – AC Mains Filter Model Numbers for 3 to 300 HP @ 460 VAC FlexPak 3000 Drives

HP Rating	AC Full Load Amps	Minimum Inductance (in microhenries (μH))	AC Mains Filter Model Number	AC Mains Inductor
3	10	1680	3DF4353	608895-63H
5	12	1400	3DF4353	608895-63H
7.5	15	1125	3DF4353	608895-63K
10	18	1000	3DF4354	608895-63K
15	24	700	3DF4354	608895-63M
20	31	550	3DF4355	608895-63P
25	39	430	3DF4355	608895-63P
30	45	375	3DF4355	608895-63R
40	60	270	3DF4357	608895-63W
50	74	225	3DF4357	608895-63W
60	86	195	3DF4357	608895-63Y
75	110	150	3DF4359	608895-63AA
100	143	120	3DF4359	608895-63AC
125	177	95	3DF4359	608895-63AE
150	213	80	3DF4359	608895-63AG
200	281	60	3DF4359	608895-63AK
250	351	48	Two 3DF4359 filters connected in parallel	608895-63AN
300	421	40		608895-63AR

B.2.4 Selecting an Operator Control Station

If an operator control station is connected to the drive, its enclosure must be conductive metal. The enclosure cover must be bonded to an internal ground point with a braided strap across the hinge. Standard industrial operator devices, such as pushbuttons, switches, and meters, can be used.

B.3 Mounting the Equipment

Mount all electronic and electromagnetic components, including the drive and the mains filter, firmly to the base mounting panel. The mounting panel must have good conductivity, as described in section B.2.1, Selecting a Mounting Panel and Electrical Cabinet.

These sections provide more detail on mounting the drive, AC mains filter, and AC mains inductor.

B.3.1 Mounting the Drive

If the cabinet includes ventilation louvers or filter and fan openings in the sides or door, the openings cannot be located within a zone 254 mm (10 inches) above and below the height of the drive, as shown in figure B.1.

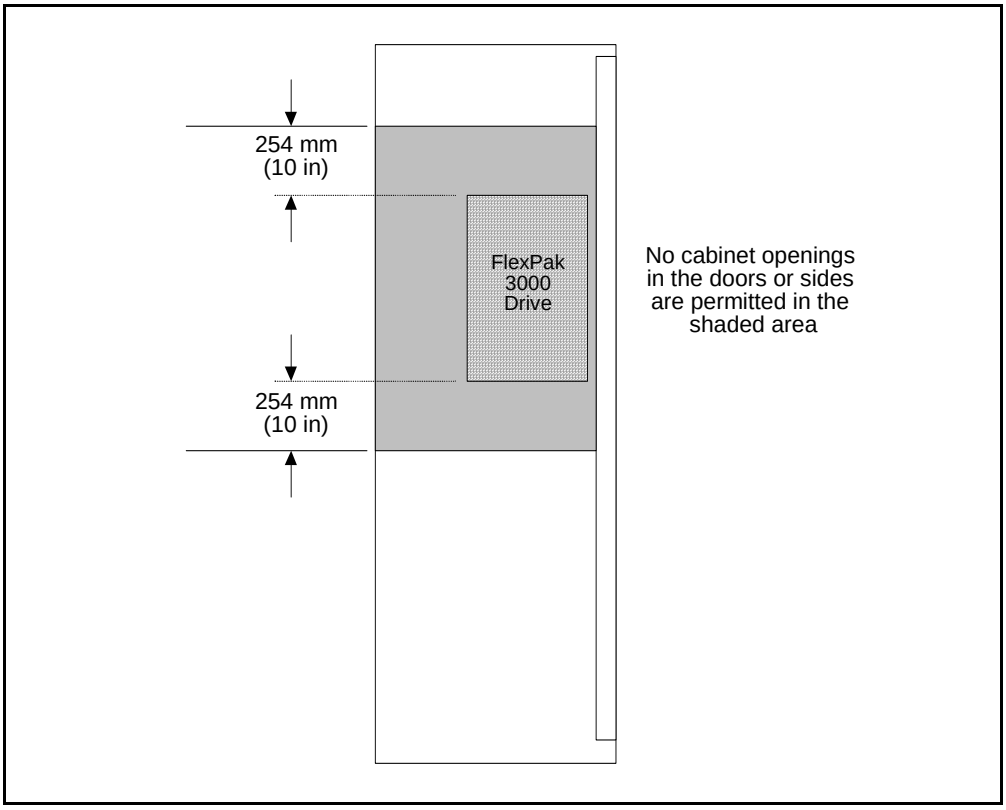

Figure B.1 – Prohibited Area for Cabinet Ventilation Openings

B.3.2 Mounting the AC Mains Filter

Refer to figures B.2 through B.5 for filter mounting dimensions. The filter can be mounted either flat, with its back against the panel, or on its side, with either side against the panel.

If the 3DF4359 is mounted on its side, it must be mounted on the L bracket first. (included with the filter). Mount the L bracket using 12 mm screws. See figure B.6 for L bracket filter mounting.

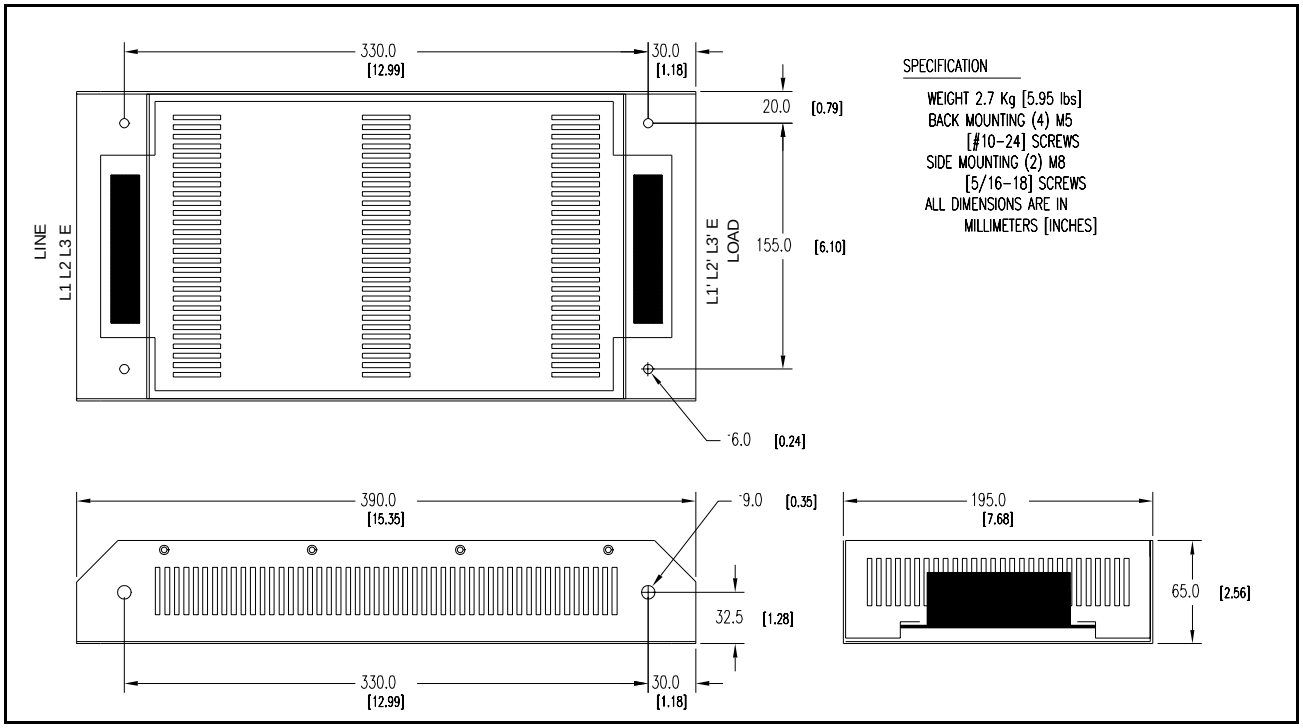

Figure B.2 – 3DF4353 and 3DF4354 Filter Dimensions

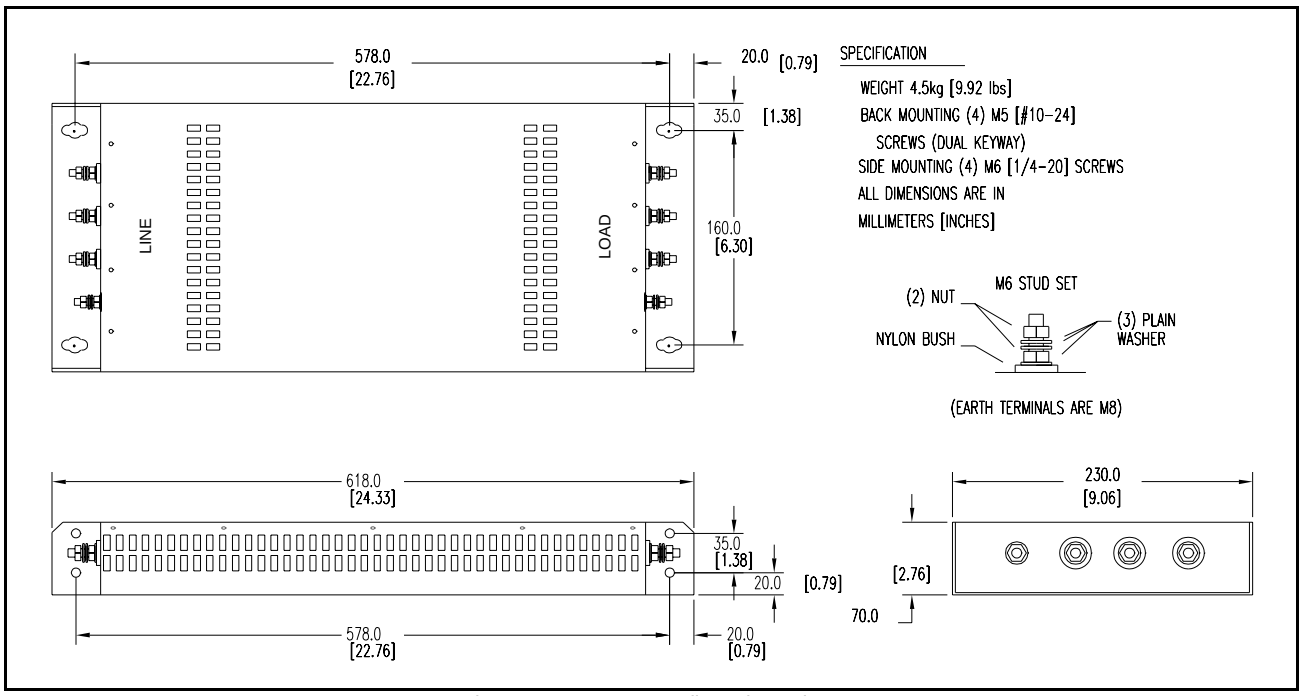

Figure B.3 – 3DF4355 Filter Dimensions

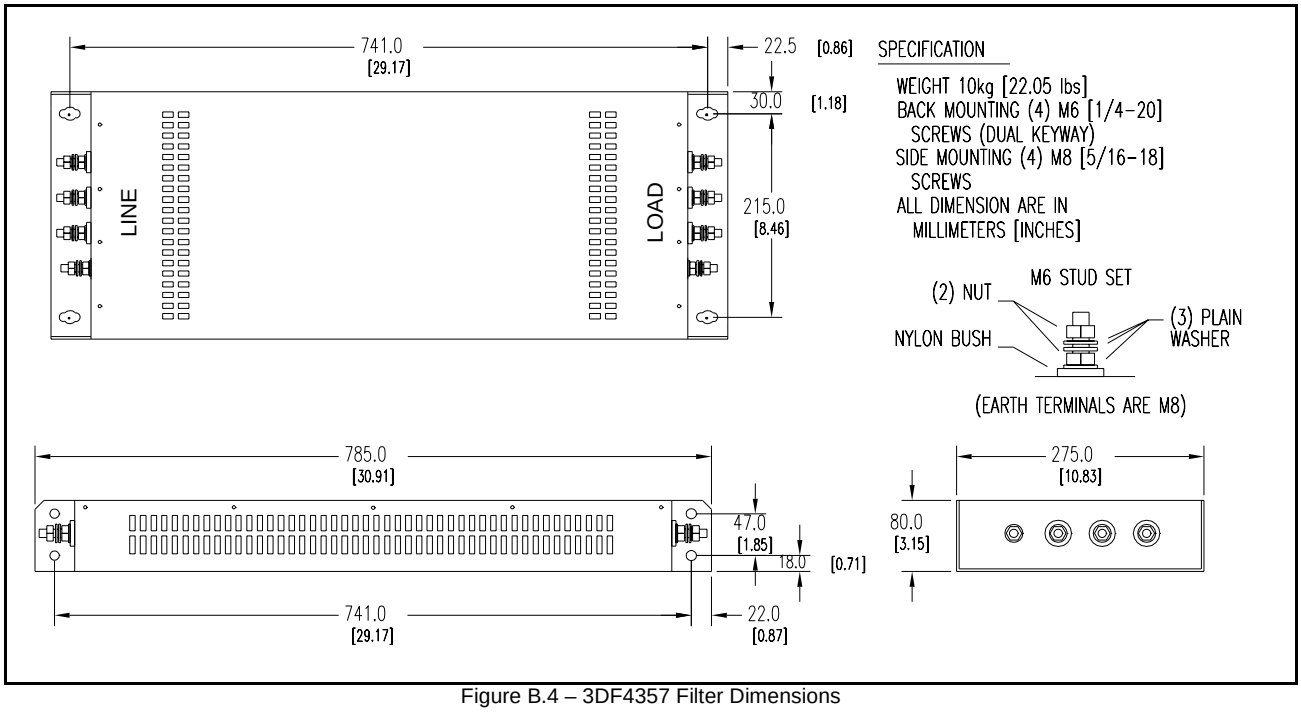

Figure B.4 – 3DF4357 Filter Dimensions

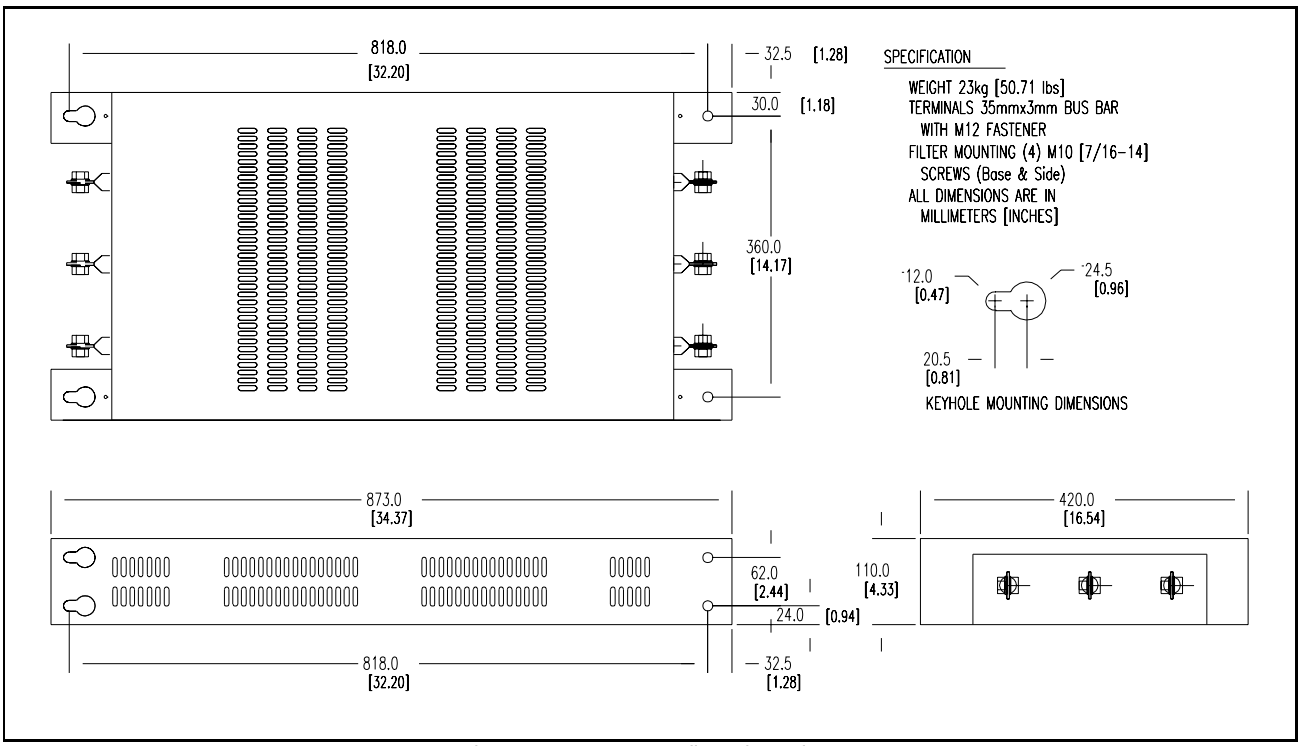

Figure B.5 – 3DF4359 Filter Dimensions

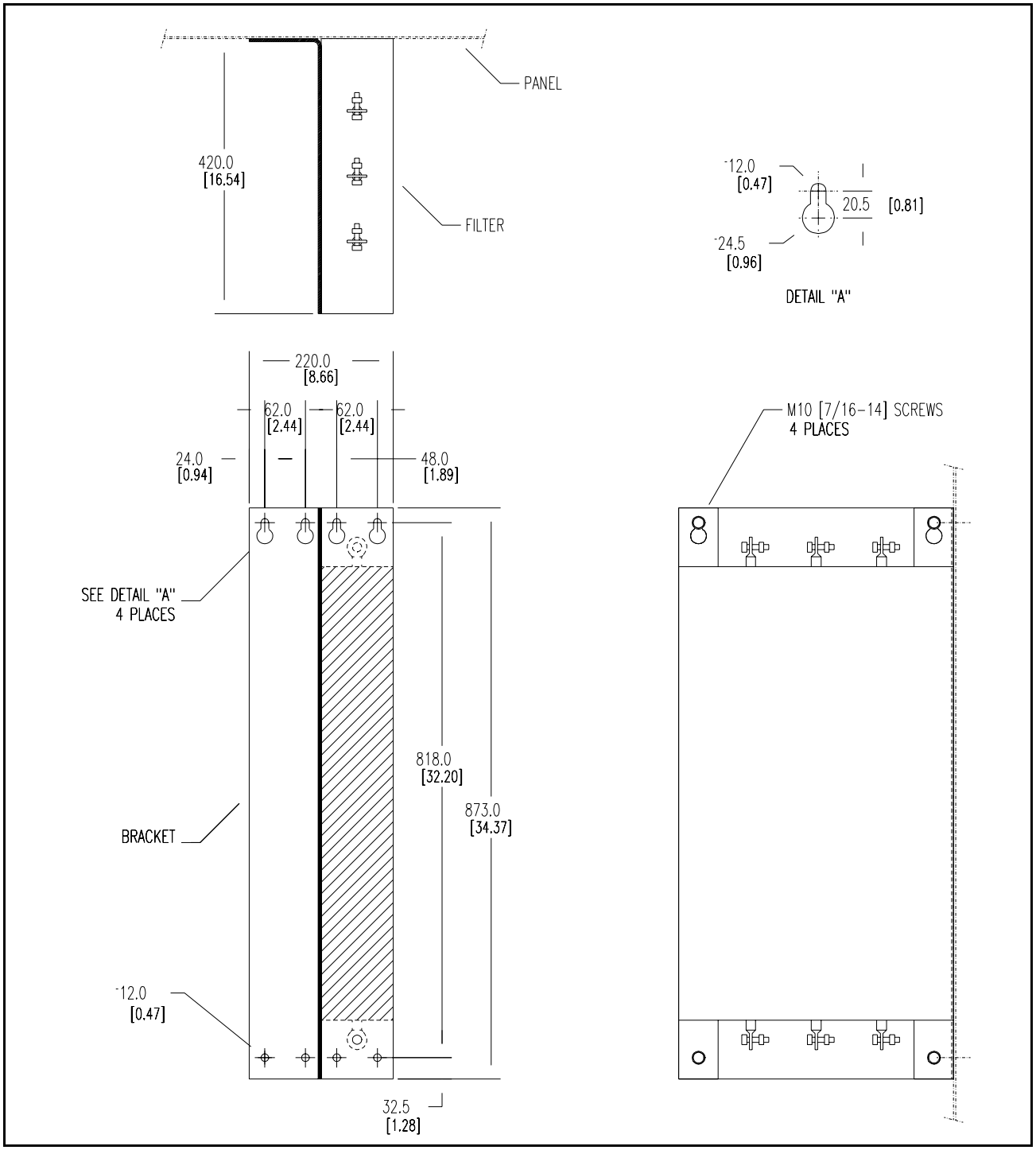

Figure B.6 – Side Mounting the 3DF4359 Filter in the L Bracket

B.3.3 Mounting the AC Mains Inductor

Important: Many inductors are coated with varnish. Any varnish on the inductor's mounting area must be removed to ensure conductivity.

See the manufacturer's documentation for additional mounting instructions.

B.4 Grounding Requirements

Star grounding must be used and must provide traditional product safety grounds, such as high current, low frequency, and high frequency noise control.

B.4.1 System Power Ground

The common power distribution system found in European countries includes the grounded neutral of the WYE transformer, as shown in figure B.7.

Local code determines whether this fourth wire may be used as the system ground. In all installations, provide a good low impedance path from the electrical equipment back to the power distribution transformer. Local code will determine the size of the ground conductor.

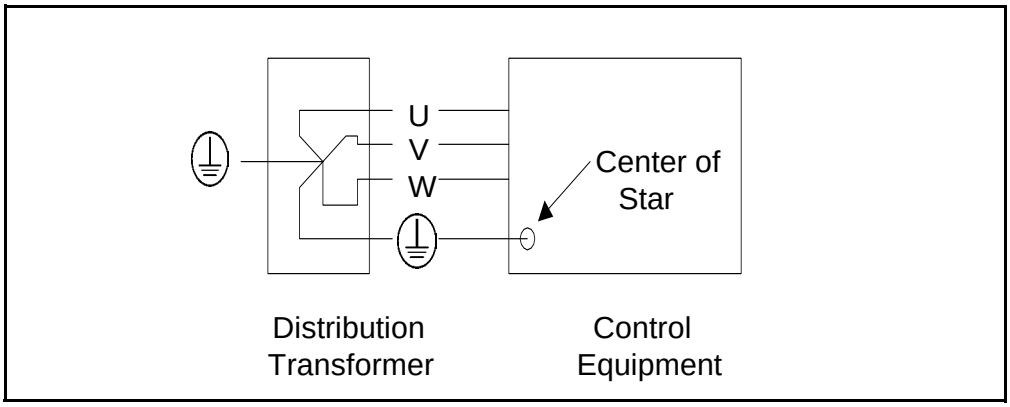

Figure B.7 – Typical Power Distribution In European Countries

B.4.2 Control System Ground

A star ground system must be provided. For convenience, the star ground can be extended by using copper bus bar that is at least 10 times wider than it is thick.

All electronic and electromagnetic equipment on the panel must be connected to the star system. Equipment that must be connected includes the FlexPak 3000 drive, the AC mains filter, the AC mains inductor, the cabinet door, and all non-welded (side and back) panels. To connect the equipment, use fine-wire braided strap. The strap should be at least 3.2 mm x 12.7 mm (0.125" x 0.5") with 150 strands.

Provide a convenience termination ground for the connection of the screen of signal and power screened cables. See figures B.8 and B.9 for proper termination of screened cables. See chapter 2 for drive grounding point locations.

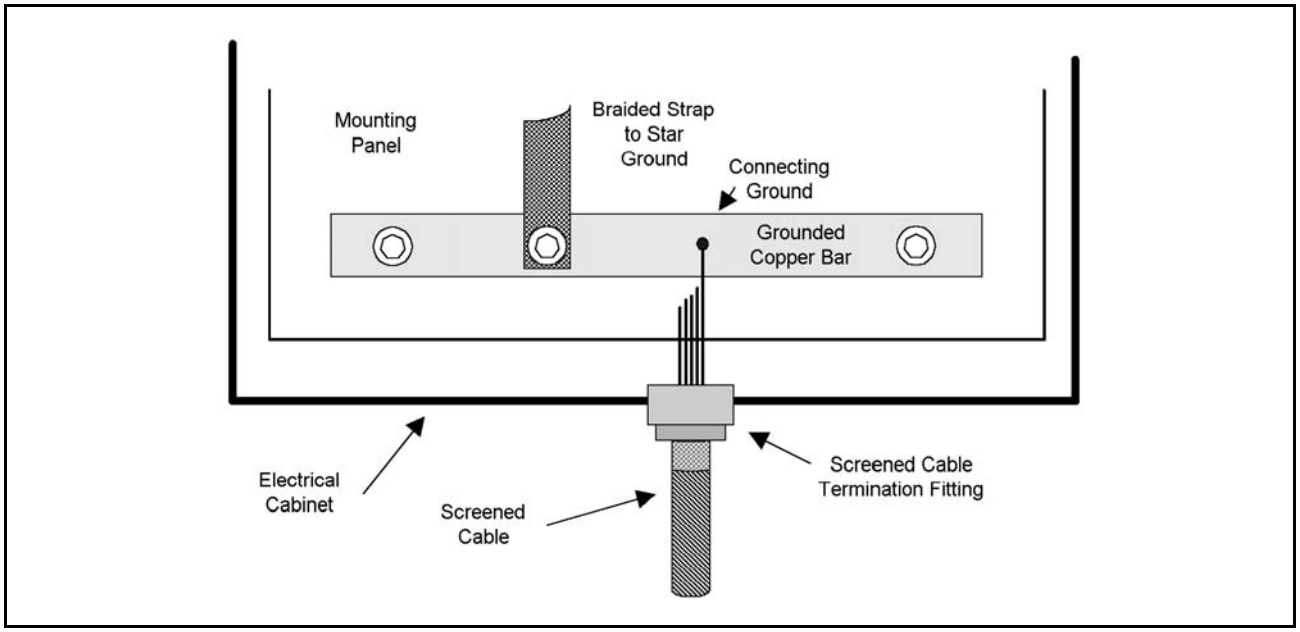

Figure B.8 – Proper Termination of Screened Cables with a Termination Fitting

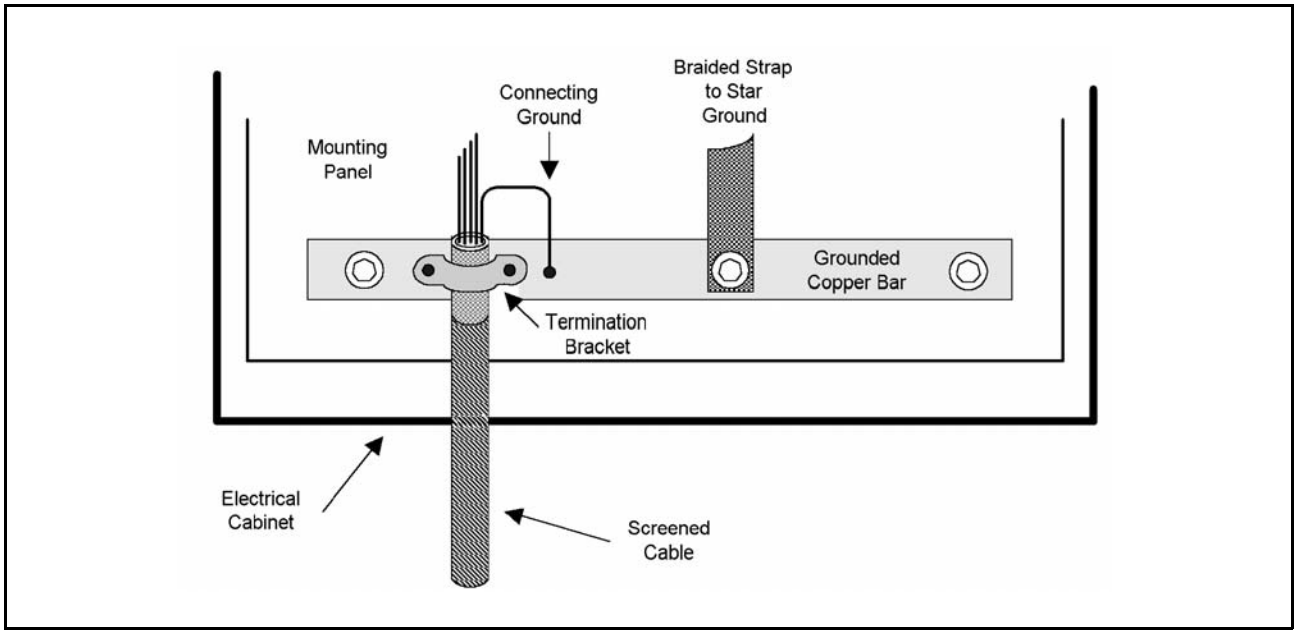

Figure B.9 – Proper Termination of Screened Cables with a Termination Bracket

When using a conduit termination fitting to terminate the screen or rigid conduit, the area around the entry hold must be free of paint and protected from corrosion.

System ground must be extended to all connected enclosures and components by running a ground conductor with the power and signal conductors to these enclosures and components, as shown in figure B.10. Follow the electrical cabinet guidelines described in this appendix for all remote electrical enclosures.

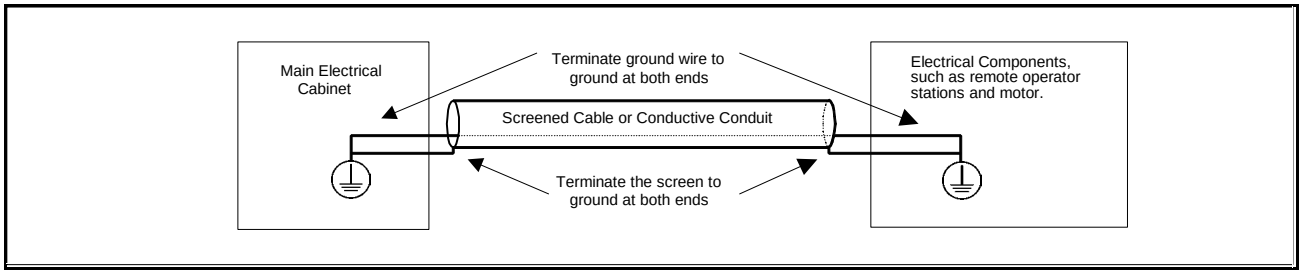

Figure B.10 – Ground System and Conduit Screen Termination

The minimum cross-sectional area of a copper ground conductor shall be per EN60204-1: Safety of Machinery - Electrical equipment of machines - Part 1: General requirements, section 5.2, Table 1.

The ground conductor must be secured at both ends in a good connection. Poor connection of a ground connection is the single biggest source of EMC problems. For connections, use fittings intended for good, long-term connections to a grounded surface, or continue the screen or conduit beyond the cabinet barrier to a ground terminal or copper bar extension. Fittings should be rust-resistant. It is preferred to terminate the screen or conductive conduit to a system ground copper bar internal on the back panel and not rely on the conduit fitting to maintain the ground circuit. Shielded cable should use a drain wire for the electrical bonding of the shield to the ground system.

B.5 Wiring the Equipment

Wiring guidelines are provided here for wiring that is external and internal to the electrical cabinet. Information specific to components is also provided.

B.5.1 External Wiring Guidelines

External control, signal, and power wiring must be in screened cable or rigid continuous conductive conduit.

If the system includes a remote operator station that is connected to the FlexPak 3000 drive, the operator station wiring must be in rigid continuous conductive conduit. Screen cable cannot be used for the operator station.

Important: Many flexible metal conduit products have not been designed for RF containment and are not adequate to maintain compliance.

B.5.2 Internal Wiring Guidelines

All cables and wires must be run as closely to the panel as possible. AC, DC and control wires should be stacked and run as shown in figure B.11.

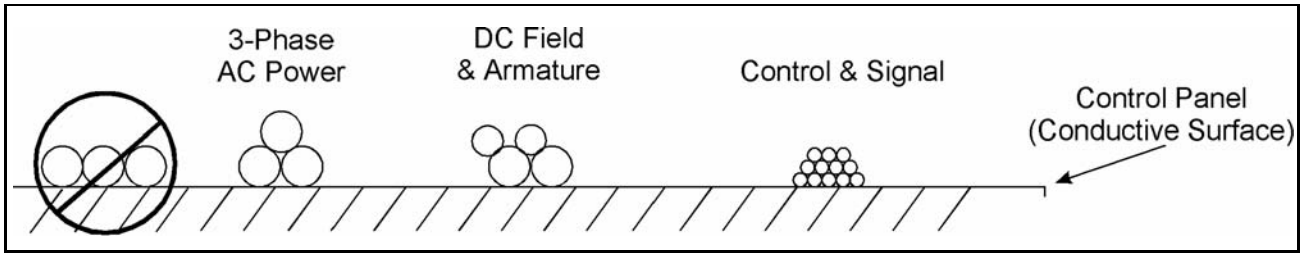

Figure B.11 – Dressing Power and Control Wires

When the AC power leads must leave the ground plane of the mounting panel to make connection to elevated device terminals, a ground wire should be run with that wire bundle.

See figures B.13 and B.14 for typical panel electrical layouts.

B.5.3 Wiring the AC Mains Filter

The mains filter is connected in series from the AC supply line to the AC mains inductor to the input terminals of the drive. See figure B.12.

AC power wiring from the electrical cabinet power entry to the mains filter must be:

- as short as possible.
- separated from any other wiring to prevent coupling high frequency noise back to the filtered leads.
- run as close to the ground plane as possible.

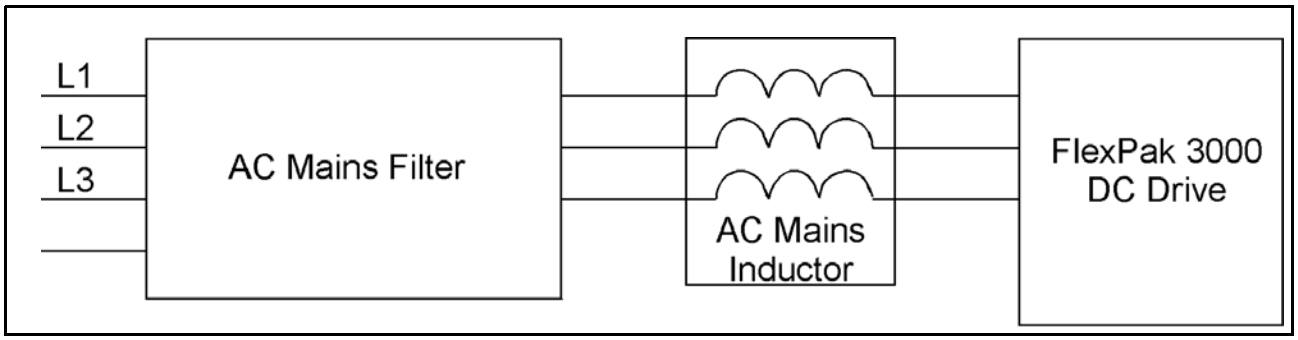

Figure B.12 – AC Mains Filter, Inductor and FlexPak 3000 Drive Wiring

B.5.4 Wiring the AC Mains Inductor

Install the mains inductor between the mains filter and the AC power input of the FlexPak 3000 drive as shown in figure B.12.

B.5.5 Wiring the Motor

Field and armature circuit wiring that is internal to the electrical cabinet must be:

- Separated from all other wiring on the panel.
- As close to the ground plane as possible. This is especially important if an inverting fault breaker or dynamic braking circuit is part of the armature circuit.

The external motor wiring must be run in a screened cable or continuous conductive conduit. The motor shunt field and armature leads can be run together in the same cable. A ground wire must be run that bonds the motor to the system star ground. Refer to figure B.10 for proper connection of the conduit screen and bonding wire.

Motor cable length is a major contributor to common mode conducted emissions. FlexPak mains filters are sized for up to 75 meters (250 feet) of screened motor power cables (total installed length). If your installation requires a greater length, contact Reliance Electric.

B.5.6 Wiring the Kits

The FlexPak 3000 has a number of option kits. The kits listed in table B.3 are EMC benign - they have no impact on the EMC compliance of the product if properly installed. See the appropriate kit I/Ms for installation and wiring information.

Instructions for wiring the I/O Expansion board, Dynamic Braking kit, and Pulse and AC Tachometer Feedback kits for CE96 compliance follow.

Table B.3 – FlexPak EMC-Benign Kits

Kit Name	Model Number
115 VAC Control Interface	917FK0101
460 VAC to 230 VAC Fuse Conversion	916FK series
AC Line Disconnect	901FK series
AutoMax Network Communication Board	915FK0101
Blower Motor Starter	902FK series
Drive Control Configuration Software for FlexPak	2CS3000
Enhanced Field Supply	923FK series
Field Current Regulator	911FK series
Inverting Fault Circuit Breaker	906FK series

B.5.6.1 I/O Expansion Board (Model Number 914FK0101)

Wiring connected to this board must be run in screened cable or continuous conductive conduit.

B.5.6.2 Dynamic Braking Kit (Model Numbers 908FK, 909FK, 912FK, and 913FK)

The standard Reliance FlexPak dynamic braking resistor kits can be installed on the top of the electrical cabinet either in an expanded sheet-metal enclosure or solid-plate enclosure without impact on compliance. The kit enclosure can be used for the resistors and dynamic braking circuit.

The DC motor armature leads to the resistor enclosure are to be dressed close to the mounting panel as shown in figure B.11.

B.5.6.3 Pulse Encoder and AC Tachometer Feedback Kits (Model Numbers 907FK0101 and 907FK0301)

The tachometer cables for these kits must be run as screened cable or in a continuous conductive conduit. A ground wire must be run with the tachometer wires and terminated to ground at both ends. The screen or conduit must be terminated at both ends to ground as discussed above and shown in figure B.10.

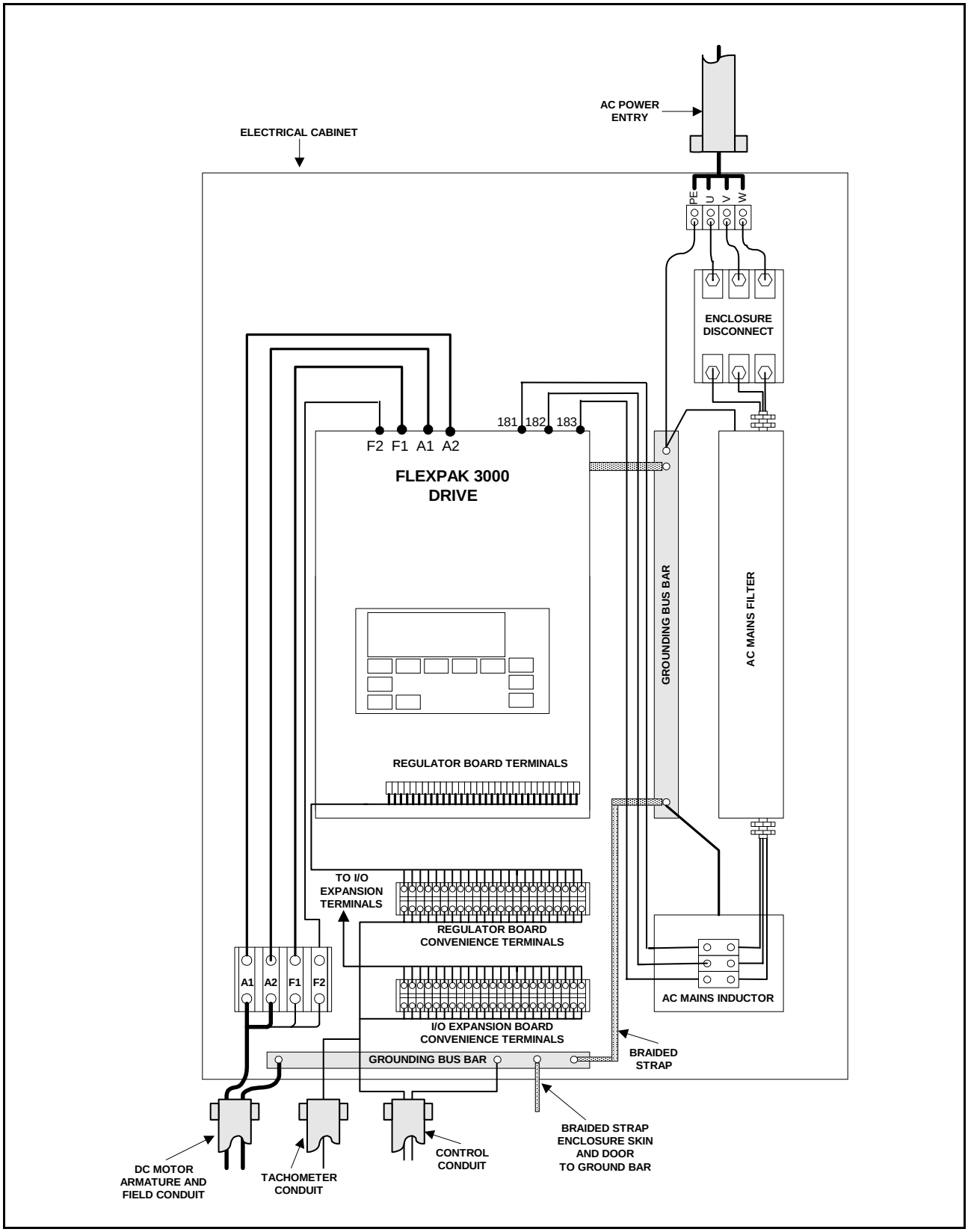

Figure B.13 – Typical FlexPak 3000 Wiring for EMC Compliance with Optional I/O Expansion Board Installed

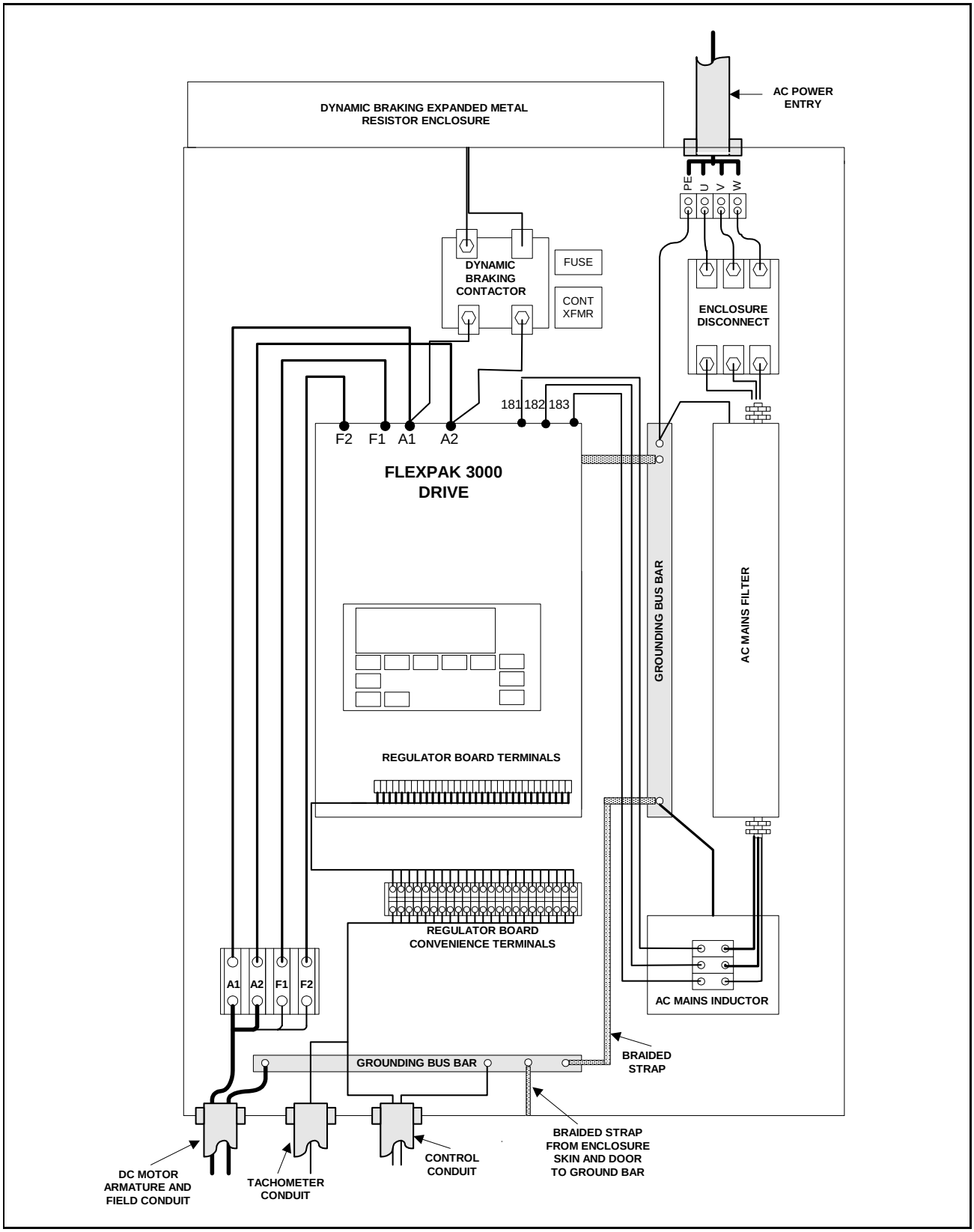

Figure B.14 – Typical FlexPak 3000 Wiring for EMC Compliance with Optional Dynamic Braking Kit Installed

APPENDIX C

Recommended Parts for Integrator Drives

Table C.1 lists the recommended parts that must be provided by the user and can be mounted separately at the time of installation. These recommended parts or an equivalent are necessary for the proper operation and functionality of the Integrator drive. Section 2.5, General Wiring Practices, details how to electrically connect these recommended parts for proper drive operation.

Table C.1 – Recommended Parts

Part Description	Qty	Reliance Part Number	Rating
AC Line Fuse (1FU, 2FU, 3FU)[1]:			
1.5 thru 5 HP @ 230 VAC/3 thru 10 HP @ 460 VAC	3	64676-120AMX	40A, 500V
7.5 thru 10 HP @ 230 VAC/15 thru 20 HP @ 460 VAC	3	64676-120ARX	80A, 500V
15 HP @ 230 VAC/30 HP @ 460 VAC	3	64676-120ASX	90A, 500V
20 thru 30 HP @ 230 VAC/40 thru 60 HP @ 460 VAC	3	64676-120AVX	150A,500V
75 HP @ 230 VAC/150 HP @ 460 VAC	3	64676-120BAX	350A, 500V
Field Fuse (6FU, 7FU, 8FU):			
1.5 thru 30 HP @ 230 VAC/3 thru 60 HP @ 460 VAC	3	64676-30K	15A, 600V
75 HP @ 230 VAC/150 HP @ 460 VAC	3	64676-30M	25A, 500V
“FN” Contactor:			
1.5 thru 2 HP @ 230 VAC/3 thru 4 HP @ 460 VAC	1	705310-60A or 100-A12ND3[2]	600V, 22A
3 thru 5 HP @ 230 VAC/6 thru 10 HP @ 460 VAC	1	705310-60A or 100-A12ND3	600V, 22A
7.5 thru 10 HP @ 230 VAC/15 thru 20 HP @ 460 VAC	1	705310-63A or 100-A24ND3	600V, 35A
15 thru 20 HP @ 230 VAC/30 thru 40 HP @ 460 VAC	1	705310-65A or 100-A45ND3	600V, 80A
25 HP @ 230 VAC/50 HP @ 460 VAC	1	705310-65Aor 100-A45ND3	600V, 80A
30 HP @ 230 VAC/60 HP @ 460 VAC	1	705310-66Aor 100-A75ND3	600V, 100A
75 HP @ 230 VAC/150 HP @ 460 VAC	1	705310-70Aor 100-B180ND3	600V, 225A
AC Line Disconnect[3]:			
1.5 thru 25 HP @ 230 VAC/3 thru 50 HP @ 460 VAC	1	65242-100NSX	600V, 100A
30 HP @ 230 VAC/60 HP @ 460 VAC	1	65242-100SSX	600V, 150A
75 HP @ 230 VAC/150 HP @ 460 VAC	1	65242-300FSX	600V, 400A

Table C.1 – Recommended Parts

Part Description	Qty	Reliance Part Number	Rating
Inverting Fault Breaker:			
1.5 thru 2 HP @ 230 VAC/3 thru 5 HP @ 460 VAC[4]	1	77801-18DXA Set at A	40A, 600V
3 thru 5 HP @ 230 VAC/7.5 thru 10 HP @ 460 VAC	1	419035-100DSA Set at L	50A, 600V
7.5 thru 10 HP @ 230 VAC/15 thru 20 HP @ 460 VAC	1	419035-100HSA Set at 2	90A, 600V
15 thru 20 HP @ 230 VAC/25 thru 40 HP @ 460 VAC	1	419035-100NSA Set at L	150A, 600V
25 thru 30 HP @ 230 VAC/50 thru 60 HP @ 460 VAC	1	419035-100SSA Set at L	450A, 600V
75 HP @ 230 VAC/150 HP @ 460 VAC	1	419035-300FSA Set at 2	625A, 600V
Armature Fuse (11FU, S6R ONLY)[5]:			
1.5 HP @ 230 VAC/3 HP @ 460 VAC	1	64676-130AGX	15A, 700V
2 HP @ 230 VAC/4 HP @ 460 VAC	1	64676-130AHX	20A, 700V
3 HP @ 230 VAC/6 HP @ 460 VAC	1	64676-130AJX	25A, 700V
5 HP @ 230 VAC/10 HP @ 460 VAC	1	64676-130ALX	35A, 700V
7.5 HP @ 230 VAC/15 HP @ 460 VAC	1	64676-130AMX	40A, 700V
10 HP @ 230 VAC/20 HP @ 460 VAC	1	64676-130ANX	50A, 700V
15 HP @ 230 VAC/30 HP @ 460 VAC	1	64676-130AQX	70A, 700V
20 thru 25 HP @ 230 VAC/40 thru 50 HP @ 460 VAC	1	64676-130AUX	125A, 700V
30 HP @ 230 VAC/60 HP @ 460 VAC	1	64676-130AVX	150A, 700V
75 HP @ 230 VAC/150 HP @ 460 VAC	1	64676-130BAX	350A, 700V

[1]Bussman series FWH or an equivalent part.
[2]Vendor type AB equivalent part.
[3]Square D Frame F type for an equivalent part.
[4]Westinghouse part number HMCP025DOC for an equivalent part.
[5] Bussman series FWP or an equivalent part.

C.1 Wire Inverting Fault Protection to the Drive (S6R, Regenerative Drives Only)

The AFB terminal must be connected to the load (motor) side of the armature fuse or inverting fault breaker. Failure to do so will cause a drive fault condition. See figure C.1 or C.2.

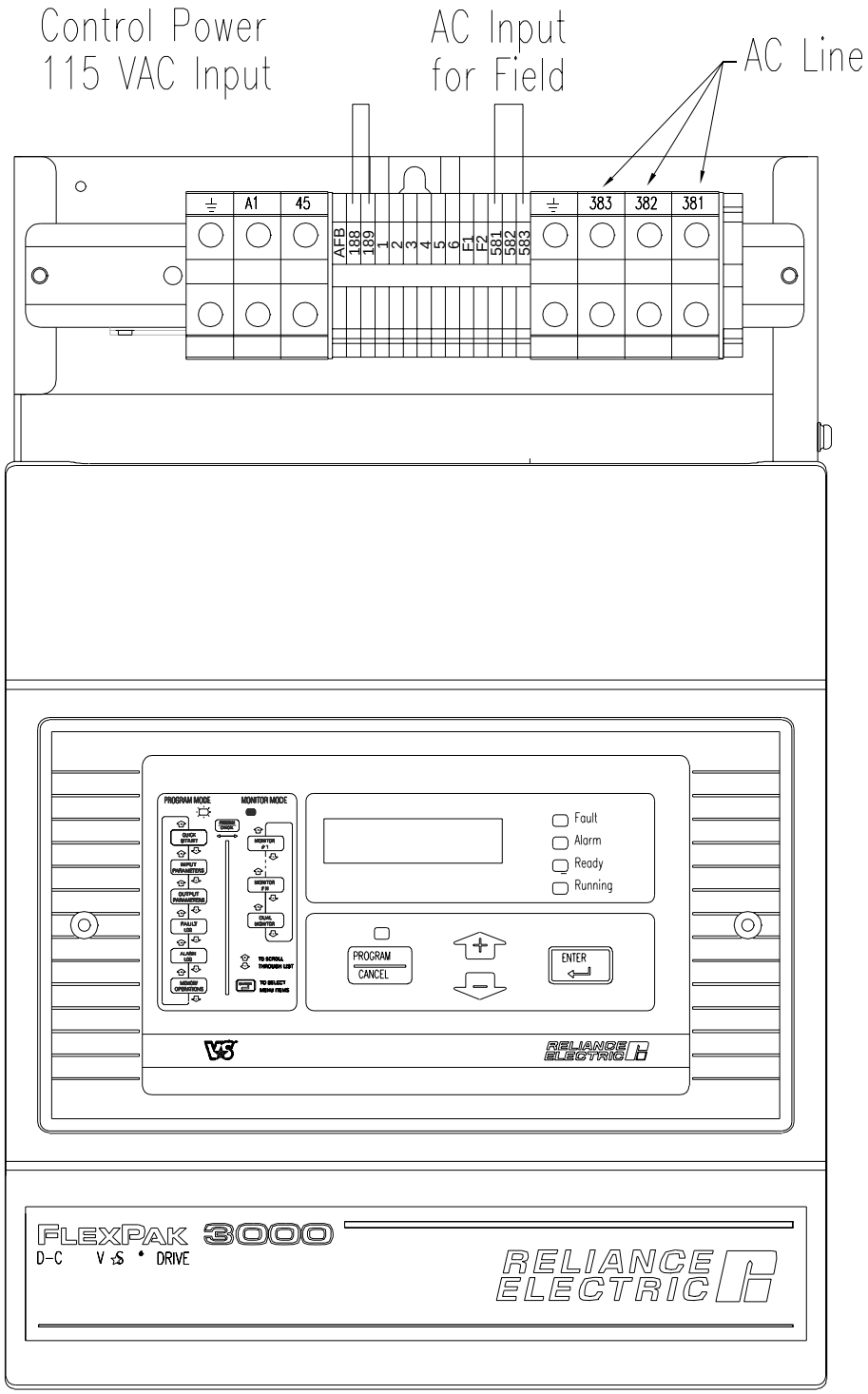

Figure C.1 – Integrator Drive AC Line Connection Locations (1.5 to 30 HP @ 230 VAC / 3 to 60 HP @ 460 VAC)

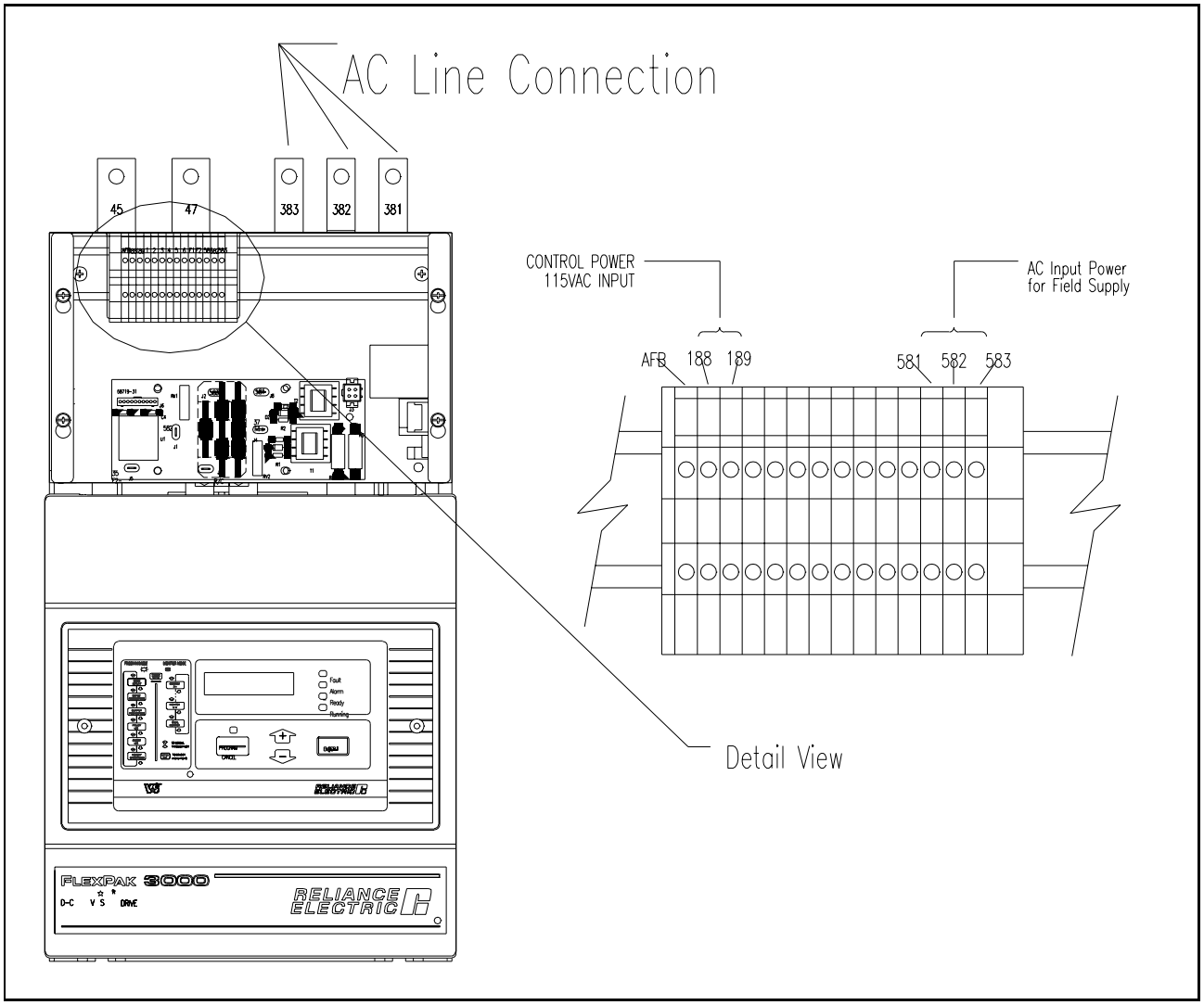

Figure C.2 – Integrator Drive AC Line Connection Locations (40 to 75 HP @ 230 VAC / 75 to 150 HP @ 460 VAC)

C.2 Wire Control Power to the Drive

Connect the user supplied 115 VAC supply to terminals 188 and 189 of the controller's power terminal block. This 115 VAC supply must be rated at 150VA minimum for 150 HP @ 460 VAC and be sized to handle the maximum inrush of the drive FN contactor. The 189 terminal may be tied to protective earth ground if required. See figure C.3.

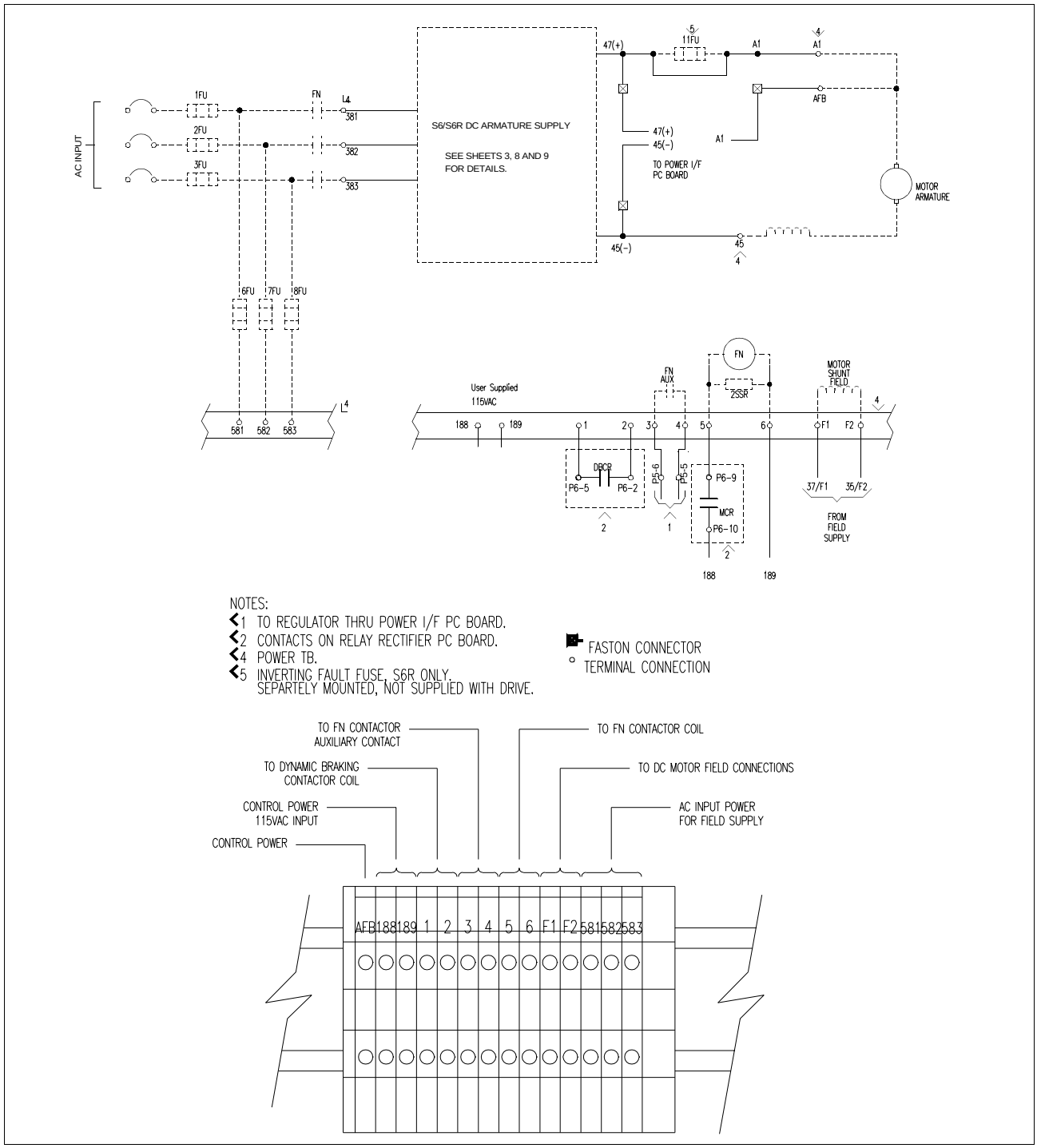

Figure C.3 – Integrator Drive Wiring Diagram

APPENDIX D

Glossary Of Terms

altitude: The atmospheric altitude (height above sea level) at which the motor or drive will be operating.

armature: The portion of the DC motor that rotates.

rated full load current: Armature current in amperes.

armature Resistance: Measured in ohms at 25 degrees Celsius (cold).

base speed: The speed which a DC motor develops at rated armature voltage and rated field current with rated load applied. Typically nameplate data.

constant speed: Used to describe a motor which changes speed only slightly from a no-load to a full-load condition.

DC motor: A motor using either generated or rectified DC power. A DC motor is usually used when variable speed operation is required.

DB: Dynamic braking.

default value: Parameter values that are stored in the drive's Read Only Memory (ROM).

direct current: A current that flows only in one direction in an electrical circuit. It may be continuous or discontinuous and it may be constant or varying.

drive: Power converting equipment supplying electrical power to a motor.

efficiency: The ratio of mechanical output to electrical input. It represents the effectiveness with which the motor converts electrical energy to mechanical energy.

field: A term commonly used to describe the stationary (stator) member of a DC motor. The field provides the magnetic field with which the mechanically rotating (armature or rotor) member interacts.

horsepower: The measure of the rate of work. One horsepower is equivalent to lifting 33,000 pounds to a height of one foot in one minute. The horsepower of a motor is expressed as a function of torque and RPM. For motors, the following approximate formula may be used:

HP = T x RPM / 5250;where HP = horsepower,
T = Torque (in lb/ft), and
RPM = revolutions per minute.

inertial load: A load (flywheel, fan, etc.) which tends to cause the motor shaft to continue to rotate after the power has been removed (stored kinetic energy). If this continued rotation cannot be tolerated, some mechanical or electrical braking means must be applied. This application may require a special motor due to the energy required to accelerate the inertia. Inertia is measured in lb. ft. squared, oz. in. squared, or mkg squared.

$$\text{Inertia reflected to the shaft of the motor} = \text{load inertia} \times \left(\frac{\text{load RPM}}{\text{motor RPM}}\right)^2$$

LCD: Liquid Crystal Display.

LED: Light Emitting Diode.

motor: A device that converts electrical energy to mechanical energy to turn a shaft.

motor electrical time constant: The ratio of electrical inductance to armature resistance. Electrical time constant in seconds defined as:

T/C = La x Ia / Hot IR voltage drop

motor identification:

- Frame designation (actual frame size in which the motor is built)
- Horsepower, speed, design and enclosure
- Voltage, frequency and number of phases of power supply
- Class of insulation and time rating
- Application

motor nameplate: The plate on the outside of a motor which describes the motor, HP, voltage, RPM, efficiency, design, enclosure, etc.

motor thermostat: Unit applied directly to the motor's windings which senses winding temperature and may automatically break the circuit in an overheating situation.

non-retentive: Information and/or data not retained while power to the drive is OFF.

power (P) in kW: The measure of the rate of work. One kilowatt (kW) is equivalent to lifting 98 kg to a height of one meter in one second. The kW rating of a motor is expressed as a function of torque and RPM. For motors, the following approximate formula may be used:

P = M x RPM / 9550

where,
M = Torque in Nm
RPM = revolutions per minute

retentive: Information and/or data retained while power to the drive is OFF.

RPM: Revolutions per Minute - The number of times per minute the shaft of the motor (machine) rotates.

service factor (SF): When used on a motor nameplate, a number which indicates how much above the nameplate rating a motor can be loaded without causing serious degradation, (i.e., a 1.15 SF can produce 15% greater torque than a 1.0 SF rating of the same motor).

tachometer: Normally used as a rotational sensing device. Tachometers are typically attached to the output shaft of a motor requiring close speed regulation. The tachometer feeds its signal to a control loop which adjusts its input to the motor accordingly.

top speed: The highest speed a drive can achieve. Top speed equals base speed when there is no field weakening.

torque: Turning force delivered by a motor or gearmotor shaft, usually expressed in pounds-feet or newton-meters:

lbs.ft. = HP x 5250 / RPM = full load torque
Nm = P(kW) x 9550/RPM = full load torque

INDEX

A

C

D

E

F

G

I

J

K

L

M

O

P

R

S

T

W

U.S. Drives Technical Support
Tel: (1) 262.512.8176, Fax: (1) 262.512.2222, Email: support@drives.ra.rockwell.com, Online: www.ab.com/support/abdrives

www.rockwellautomation.com

Power, Control and Information Solutions Headquarters

Americas: Rockwell Automation, 1201 South Second Street, Milwaukee, WI 53204-2496 USA, Tel: (1) 414.382.2000, Fax: (1) 414.382.4444
Europe/Middle East/Africa: Rockwell Automation, Vorstlaan/Boulevard du Souverain 36, 1170 Brussels, Belgium, Tel: (32) 2 663 0600, Fax: (32) 2 663 0640
Asia Pacific: Rockwell Automation, Level 14, Core F, Cyberport 3, 100 Cyberport Road, Hong Kong, Tel: (852) 2887 4788, Fax: (852) 2508 1846

Publication D2-3404-2- June 2004