TLink Option Module

Catalog Numbers 20-750-TLINK-XT, 20-750-TLINK-FOC-5, 20-750-TLINK-FOC-10, 20-750-TLINK-FOC-50

Allen-Bradley
by ROCKWELL AUTOMATION

User Manual

Original Instructions

Important User Information

Read this document and the documents listed in the additional resources section about installation, configuration, and operation of this equipment before you install, configure, operate, or maintain this product. Users are required to familiarize themselves with installation and wiring instructions in addition to requirements of all applicable codes, laws, and standards.

Activities including installation, adjustments, putting into service, use, assembly, disassembly, and maintenance are required to be carried out by suitably trained personnel in accordance with applicable code of practice.

If this equipment is used in a manner not specified by the manufacturer, the protection provided by the equipment may be impaired.

In no event will Rockwell Automation, Inc. be responsible or liable for indirect or consequential damages resulting from the use or application of this equipment.

The examples and diagrams in this manual are included solely for illustrative purposes. Because of the many variables and requirements associated with any particular installation, Rockwell Automation, Inc. cannot assume responsibility or liability for actual use based on the examples and diagrams.

No patent liability is assumed by Rockwell Automation, Inc. with respect to use of information, circuits, equipment, or software described in this manual.

Reproduction of the contents of this manual, in whole or in part, without written permission of Rockwell Automation, Inc., is prohibited.

Throughout this manual, when necessary, we use notes to make you aware of safety considerations.

WARNING: Identifies information about practices or circumstances that can cause an explosion in a hazardous environment, which may lead to personal injury or death, property damage, or economic loss.

ATTENTION: Identifies information about practices or circumstances that can lead to personal injury or death, property damage, or economic loss. Attentions help you identify a hazard, avoid a hazard, and recognize the consequence.

IMPORTANT Identifies information that is critical for successful application and understanding of the product.

Labels may also be on or inside the equipment to provide specific precautions.

SHOCK HAZARD: Labels may be on or inside the equipment, for example, a drive or motor, to alert people that dangerous voltage may be present.

BURN HAZARD: Labels may be on or inside the equipment, for example, a drive or motor, to alert people that surfaces may reach dangerous temperatures.

ARC FLASH HAZARD: Labels may be on or inside the equipment, for example, a motor control center, to alert people to potential Arc Flash. Arc Flash will cause severe injury or death. Wear proper Personal Protective Equipment (PPE). Follow ALL Regulatory requirements for safe work practices and for Personal Protective Equipment (PPE).

Table of Contents

NOTES:

About This Publication

This user manual explains how to use a TLink option module to create a TLink system. A TLink system can use multiple drives and is based on Connected Components Workbench™ (CCW) software and PowerFlex® 750-Series AC Drives with TotalFORCE® Control.

Introduction

The TLink option modules are used to create a high speed, communications network with excellent reliability between PowerFlex 755T drive products. A TLink based system consists of at least two drives, each with one TLink option module, which is connected by a fiber-optic cable. One drive is considered the leader and all other drives in the network are considered followers. TLink option modules provide synchronization of all drives in the system and allow them to share data from the leader drive to the follower drives.

Conventions Used in This Manual

The following conventions are used throughout this manual:

- PowerFlex 755TL low harmonic drives, PowerFlex 755TR regenerative drives, and PowerFlex 755TM drive systems are also referred to as PowerFlex 755T drive products.
- The TLink option module card can be used with any 755T control pod (drives, bus supplies, and common bus inverters). Unless specificity is necessary, the products are all referred to as 755T drive products.
- Parameter names are shown in the format Parameter *XX:xxx* [*]. The *xx* represents the parameter number. The * represents the parameter name—for example Parameter 01 - [Port Number].
- The HIM or drive firmware revision number (FRN) is displayed as FRN *X.xxx*, where '*X*' is the major revision number and '*xxx*' is the minor revision number.

Notes:

Getting Started

TLink option modules allow high-speed communication between drives. A TLink based system consists of at least two TLink option modules that are installed in two or more drives that are connected by a fiber-optic cable. One drive is considered the leader and all others are considered followers. The TLink option module is intended to provide synchronization of the drives in a system and to share data from leader to followers.

Components

TLink based system consists of at least two drives, each with one TLink option module, which is connected by a fiber-optic cable. One drive is considered as a leader, when all others are considered as followers. TLink card is intended to provide synchronization of all drives in system and to share data from leader to followers.

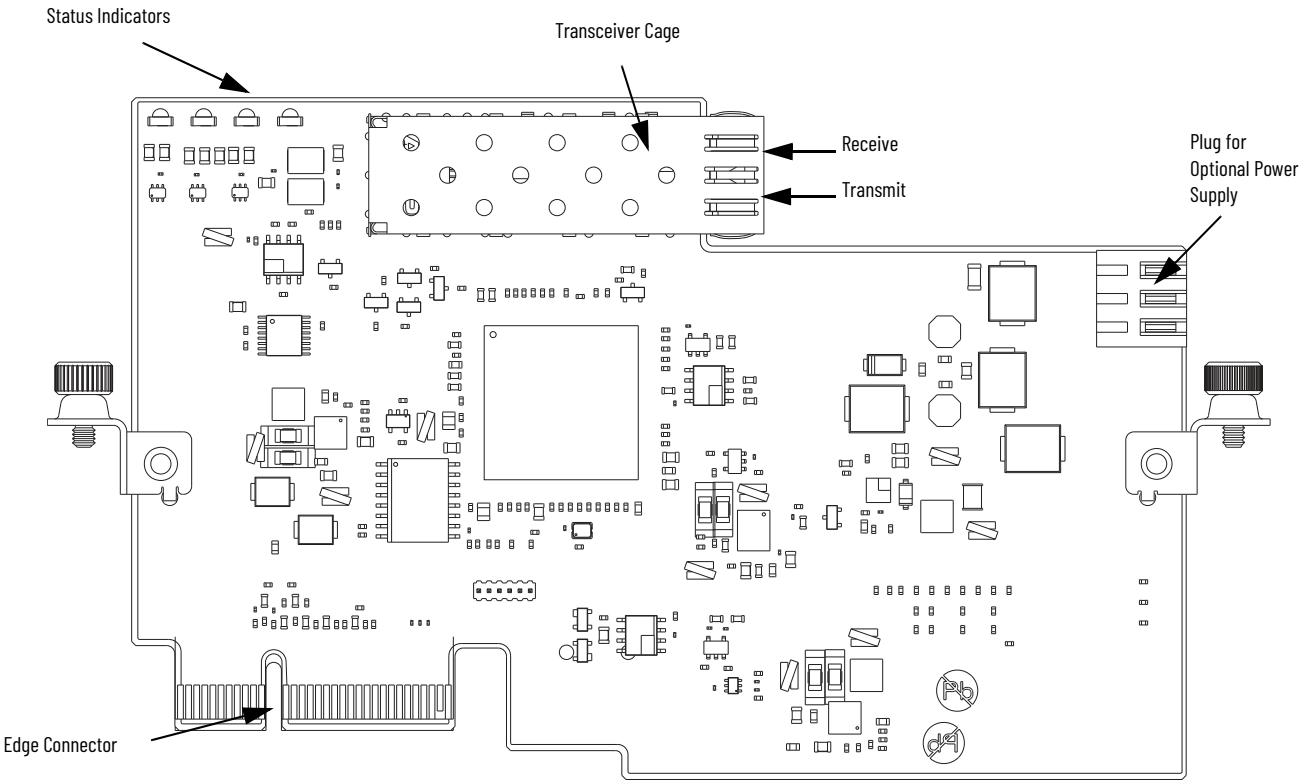

Compatible Drives

The TLink option modules are compatible with PowerFlex® 750-Series Products with TotalFORCE® Control.

Configuration Tools and Software

TLink option modules are compatible with the following configuration tools and software:

- PowerFlex 20-HIM-A6 or 20-HIM-C6S HIM
- Connected Components Workbench software is the recommended standalone software tool for use with PowerFlex drives. Download it for free from the Product Compatibility and Download Center (PCDC) at rok.auto/pcdc.

Features

Features of the TLink option module include:

- Leader drive with one or multiple followers
- Linear or ring topologies are supported
- Light-emitting diodes (LEDs) are visible when the cover is removed
- Optional external power supply can be used to maintain power for fiber-optic communications pass through when a drive is powered down

We recommend the 1606 power supply family from Rockwell Automation. If using your own supply, TLink option modules draw 55 mA at 24 vDC.

System Design Considerations

The TLink communication option modules are installed with one TLink option module per drive. Total nodes and distance between nodes in a system are not limited but do have an impact on the communication delay between the leader and followers.

There can be one optional external power supply per TLink option module. An optional power supply can be used to allow pass through communications when a drive in the network is turned off. Alternatively, TLink option modules can maintain pass-thru of data with an appropriately sized external 24V DC power source that is connected to the 24V DC control bus terminals that are located in the control bay and the input bay of 755T products.

The TLink option module is only operational when the Primary Control Mode (Port 10) is set to one of the Flux Vector (FV) control modes: 4 'Induction FV', 5 'IPM FV', and 6 'SPM FV'.

The TLink option module supports these features:

- Mode A
  - 64 bit, two 32-bit data words, 250 µs data update rate
  - Drives synchronized within 5%, locked within max 1000 ms
  - Synchronization allowing to pick phase delay of 0...360° for follower drive. (Can be hard-coded after selecting optimal value during development)
- Torque follower applications
- Port 10 control data
- TLink supported in option module ports 4, 5, and 6
- Flux Vector Control Modes

  - Induction FV
  - IPM FV
  - SPM FV
- Leader data output points (real)
  - 10:2072 Trq Ref Out (units: %, transferred value: numerical float)
  - 10:2076 Trq Ref Selected (units: %, transferred value: numerical float)
  - 10:2150 Trq Ref Filt In (units: %, transferred value: numerical float)
  - 10:1923 VRef Ramped (user/drive parameter-dependent units: Hz/RPM, transferred value: only RPM)
- Node data input points (real)
  - 10:2000 Trq Ref A Sel (units: %, transferred value: numerical float)
  - 10:1800 VRef A Sel (units: Hz/RPM, transferred value: only RPM)
- All nodes receive the same data from the leader drive
- Delayed Command Function – single scan
  - Single scan velocity delay (existing functionality)
  - Enabled via [Vel Ctrl Options]<P10.1950> bit 8
  - 10.1924 VRef Delayed is the delayed version of 10:1923 VRef Ramped
- Pass-through data in follower drives with auxiliary power supply to TLink option module
- Field Upgradeable

TLink Time Synchronization

TLink option modules use a leader-follower mechanism to achieve time synchronization between the control loops of multiple PowerFlex 755T drives for highly coordinated and distributed applications. The 125 µs and 250 µs control loop intervals in every drive are derived from a local time base generator in the control board of the drive. When a drive is configured as a follower, the control loop timing is derived from a time base generator in the TLink option module. When multiple drives are coordinated in a TLink network, the leader drive sends synchronization messages to the follower drives. The TLink card in each follower drive aligns its local time base generator to these messages and indicates when it is synchronized with the leader drive.

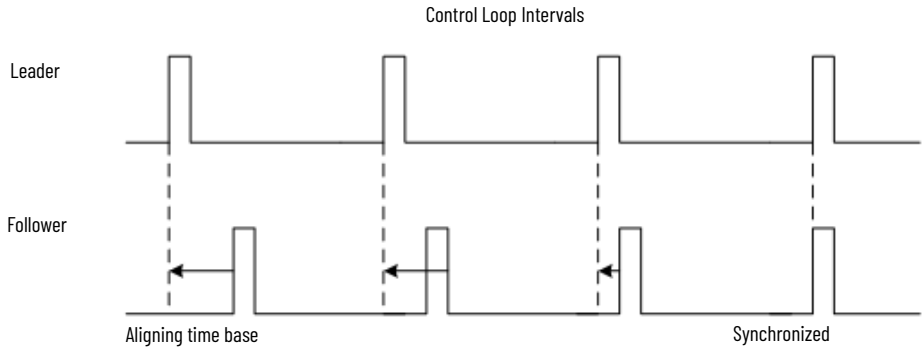

Initial synchronization of the follower drives typically takes several hundred milliseconds.

The leader drive can use reference values one calculation cycle before follower drives. To achieve perfect synchronization, you can add a one cycle delay for these values on the leader drive. The relevant settings are:

- Parameter 10: 420 [Mtr Cfg Options] bit 16 'Iq Delay' for torque, and
- Parameter 10:1950 [Vel Ctrl Options] bit 8 'Delayed Ref' for Velocity.

The transmit time from the leader drive to the follower drives introduces a small variation in skew times, which is largely a function of the total fiber-optic cable length between the leader drive and the follower drive and the speed of light in the fiber-optic cable. The follower drive furthest from the leader drive experiences the largest skew time. The speed of light in the fiber-optic cable is about 5 ns per meter.

Skew time in the system due to the distance between nodes can be calculated with the following formula:

$$\left(5\frac{ns}{m} \times n \times d\right) + (1ns \times n) \pm 150ns$$

Where n is the number of the follower in chain of drives and d is the distance between drives. If the distance between drives varies, (n × d) can be replaced with the total distance between leader and the follower for which skew time is being calculated. Jitter in the system accounts for the +/- 150 ns variability in the total delay.

Example:

In a system with 50 drives (1 leader and 49 followers) and 50m between each drive, the skew time due to distance in the 49th follower is calculated as follows:

$$\left(5\frac{ns}{m} \times 49 \times 50m\right) + (1ns \times 49) \pm 150ns$$

$$12{,}299ns \pm 150ns \quad \text{or} \quad 12.299\mu s \pm 0.15\mu s$$

Typical Configuration

TLink equipped drives can be connected in linear or ring networks. An optional external power supply can be connected to any TLink card in linear or in ring topology. The power supply works for the TLink card it is connected to, not for entire system. Each TLink card can be powered from the drive or the optional external power supply. Both sources of power can be used at the same time. An external power supply allows the card to transfer data even if a drive is powered-off.

Linear Topology

TLink option modules can be connected in a linear network. The following illustration shows a TLink network with three drives that are connected through TLink option modules. TLink option module A is the leader TLink option module. TLink option modules B and C are the followers. TLink module

B is connected to an optional external power supply to allow pass-thru of data to TLink module C even if the drive that TLink option module B is installed in is not powered.

As an alternative to an external power supply, TLink option modules can maintain pass-thru of data with an appropriately sized external 24V DC power source that is connected to the 24V DC control bus terminals that are located in the control bay and the input bay of 755T products.

Figure 1 - TLink Modules in Linear Network

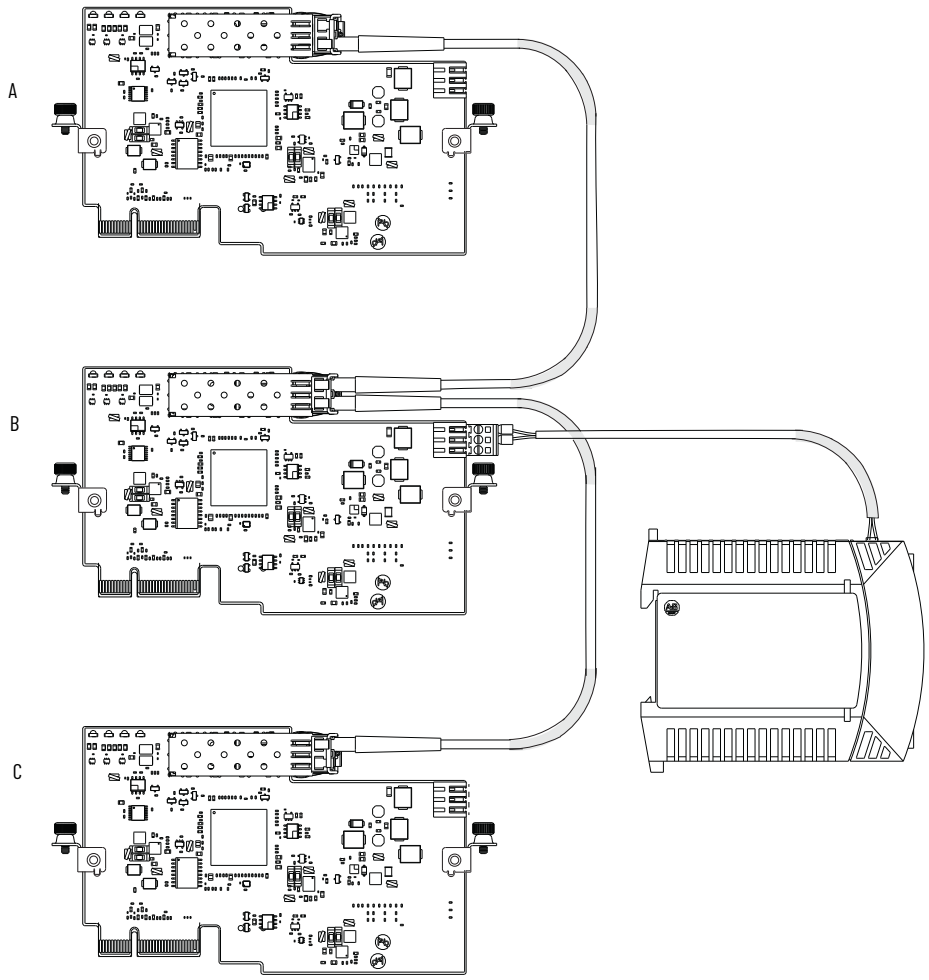

Ring Topology

A TLink ring topology network allows you to choose a new leader without changing fiber-optic connections. An auxiliary power supply can be used as in a linear network to maintain communication when a drive between the leader and any other follower is powered down. Ring networks are unidirectional.

Figure 2 shows TLink option modules in a ring network. There is one leader device and up to three followers, which supports four drives. The following illustration shows a TLink network with three drives that are connected through TLink option modules. TLink option module A is the leader TLink option module. TLink option modules B and C are the followers. TLink module

B is connected to an optional external power supply to allow pass-thru of data to TLink module C even if the drive that TLink option module B is installed in is not powered.

Data flows from the leader to the followers and back to the leader from the last follower.

Figure 2 - TLink Modules in Ring Network

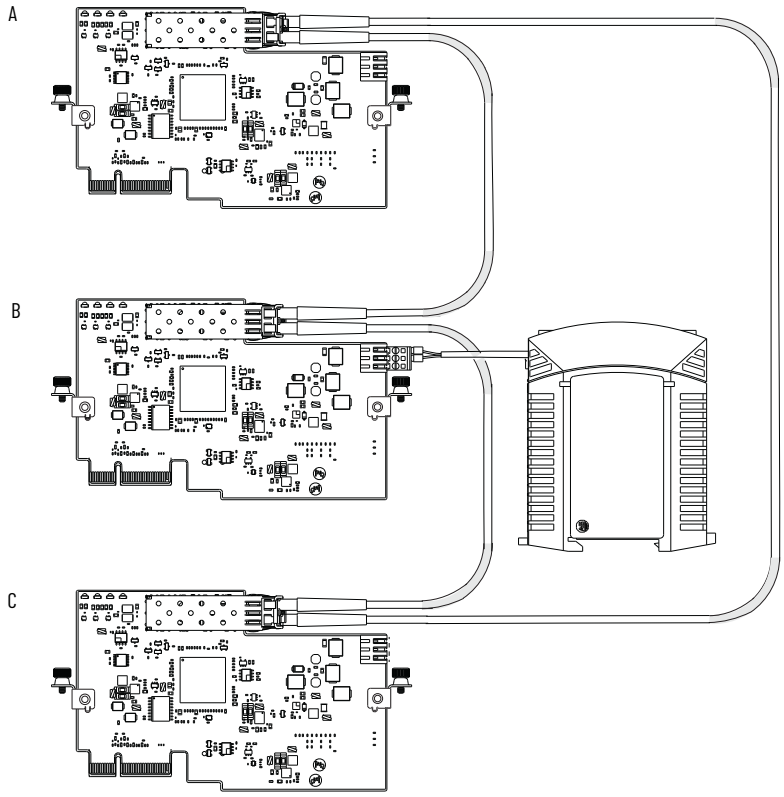

Configuring the TLink Option Module

This chapter provides instructions and information for setting the parameters to configure the TLink option module.

For a list of parameters in the TLink option module, see Appendix A, Parameter List.

Access Parameters with the PowerFlex Human Interface Module (HIM)

TLink option module parameters are accessed through an enhanced PowerFlex® 20-HIM-A6 or 20-HIM-C6S HIM.

1. Display the Status screen, which is shown on HIM power-up.
2. Use the 4 ◄ or ► 6 key to scroll to the Port in which the option module is installed.
3. Display the Jump to Parameter # entry popup box by pressing the PAR# soft key.
4. Use the numeric keys to enter the desired parameter number, or use the up or down soft key to scroll to the desired parameter number.

For details on how to view and edit parameters, see the PowerFlex 20-HIM-A6/-C6S HIM (Human Interface Module) User Manual, publication 20HIM-UM001.

TLink Option Module Configuration Parameters

See Appendix A for a list of parameters that are used for configuring the TLink Option Module parameters.

Configure a Source for Leader or Follower Data

The leader drive is configured to output data through the TLink card using two selector switches, 201[TLink Out Sel 1] and 202[TLink Out Sel 2], one for each data word in Mode A.

Example User Setup

Install TLink Option Modules

1. Install TLink option module in port 4, 5, or 6 of the leader drive.
2. Install TLink options modules in additional follower drives with fiber-optic cables between drives.
3. Power on the drives.

Configure TLink Leader Drive

4. Leader - TLink option module appears in the port corresponding to the card port number with parameters set to these default values, where *nn* is the port where the TLink option module is located:
   - *nn*: 1[TLink Mode] = 0 'Bypass'
   - *nn*: 2[TLink Role] = 1 'Follower'
   - *nn*: 3[TLink Status] = 0 'Inactive'
   - *nn*: 201[TLink Out Sel 1] = 0 'Trq Ref Out'
   - *nn*: 202[TLink Out Sel 2] = 0 'TrqRef Out'
   - *nn*: 10[TLink Comm Loss Action] = 0 'Zero Data'
5. Set *nn*: 1[TLink Mode] = 1 'Mode A'
6. Set *nn*: 2[TLink Role = 0 'Leader'
7. Configure the TLink option module port per the desired application
   - Set *nn*: 201[TLink Out Sel 1] = 0 'Trq Ref Out'
   - Set *nn*: 202[TLink Out Sel 2] = 3 'VRef Ramped'

Configure Follower Drives

8. Follower - Configure all follower drives by setting TLink mode = A and TLink Role = Follower
9. Configure port 10 per the desired application
   - Set 10:[Trq Ref A Sel] = *nn*: 203[TLink In 1]
   - Set 10:[VRef A Sel] = *nn*: 206[TLink In 2]
10. Set *nn*: [Data 1 Factor] of follower drives to the desired value.
11. Set *nn*: [Data 2 Factor] of follower drives to the desired value.
12. Verify transmission of data by leader drive in leader *nn*: 3[TLink Status] = 1 'Tx Active'.
13. Verify that all follower drives are synchronized to the leader drive in follower *nn*: 3[TLink Status] = 3 'In Sync'.
14. Start application by coordinating run of all drives.

Setting a Fault Action

TLink option modules do not stop the drives due to faults. They report problems to the drive and continue to operate until the drive signals to stop communicating if necessary.

The parameters related to TLink fault actions are shown in the TLink Option Module Faults and Alarms table. TLink option module parameters are described in Appendix A.

Set the TLink fault actions in your drives according to your application needs.

Updating Firmware

The interface firmware is contained within the PowerFlex 755T drive firmware. The interface firmware can be updated over the network.

When updating firmware over the network, you can use the Allen-Bradley® ControlFLASH™ software tool.

To obtain a firmware update for this interface, go to rok.auto/pcdc.This website contains all firmware update files and associated Release Notes that describe the following items:

- Firmware update enhancements and anomalies
- How to determine the existing firmware revision
- How to update the firmware using ControlFLASH™ software

Setting a Fault Action

TLink option modules do not stop the drives due to faults. They report problems to the drive and continue to operate until the drive signals to stop communicating if necessary.

The fault-related parameters are 10[CommLossAction], 11[CommWatchdogCfg], 12[SysCommLossCfg], 13[FibOfflineCfg], 14[ExtPwrLossCfg], and 15[OverTempCfg].

See Appendix A for a complete list of TLink parameters and settings.

Set the TLink fault actions in your drives according to your application needs.

Notes:

Troubleshooting

Status Indicators

The TLink option module has four light-emitting diode (LEDs) used to signal the following events:

DS1:

- Red continuous when the fiber-optic cable is disconnected (receiver side).
- Green continuous when fiber-optic cable is connected (receiver side).
- Green blinking when packets are incoming (transmission is on).

DS2:

- Green continuous: TLink module role is Leader. Transmitting is enabled.
- Green blinking: Transmission (packets are being transmitted, TLink role: leader).
- Off: The TLink is not configured as a leader

DS3:

- On (green): External power supply connected
- Off: external power supply not connected

DS4:

- Green blinking: TLink FPGA is powered on, normal operation
- Red blinking: TLink FPGA detected an unexpected condition during communication/operation. Card status is sent to drive.

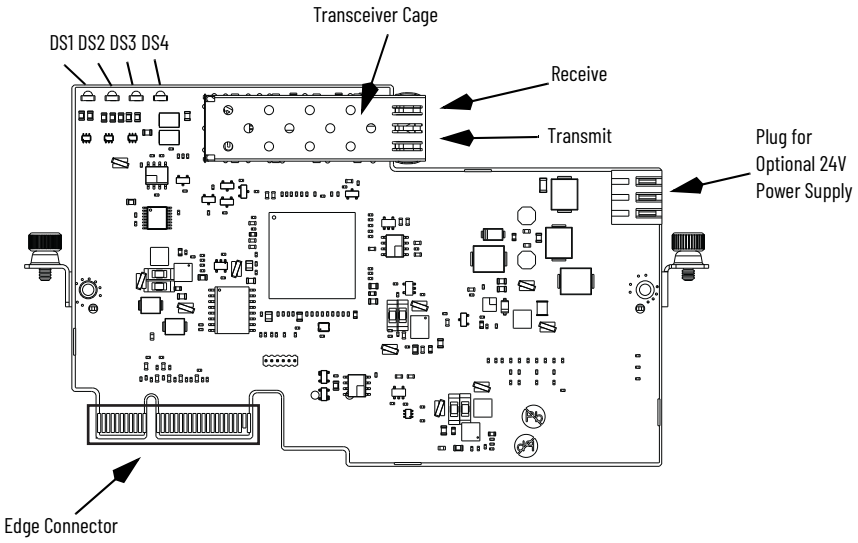

Faults and Alarms

Faults and alarms are applied to drive conditions/status rather than the TLink module. If there is an error in a TLink modules operation, the condition is flagged to the drive. The TLink module keeps working until its stopped by the drive.

TLink Option Module Faults and Alarms

External Fault/ Alarm Code	Fault/ Alarm Text	Condition Name	Response Type	Configuration Parameter	Fault/Alarm Definition	Actions	Source	Detection Mechanism
1	High Temp	High Temperature	Alarm 1	–	The temperature a TLink card has reached the Alarm Temperature of 75 °C (167 °F). Possible causes include high ambient temperature and obstructed airflow.	Check the ambient temperature. Check the condition of cabinet air filters.	Card	Raised when board_ot_alarm bit is set in the alarm_reg register of the card
2	Over Temp	Over Temperature	Configurable	15 [OverTempCfg]	The temperature of aTLink card has reached the Fault Temperature of 80 °C (176 °F). Possible causes include high ambient temperature and obstructed airflow.	Check the ambient temperature. Check the condition of cabinet air filters.	Card	Raised when board_ot_fault bit is set in the alarm_reg register of the card
3	Comm Watchdog	Communications Watchdog	Configurable	11 [CommWatchdogDfg]	Follower configuration: Message timeout on fiber-optic interface was detected. Possible causes are broken fiber-optic link, card failure, or leader drive failure, fiber-optic transceiver failure. leader and bypass configurations: Fiber-optic transceiver failure.	Check if the fiber-optic transceiver is firmly inserted into the TLink card. Check all fiber-optic cables starting from this drive and going up to leader drive. Check if the leader drive is operating and is configured correctly. Check if all preceding follower drives are operating and are configured correctly; if any of the preceding followers are powered down, check if the external power supply is provided to its TLink card. Replace the fiber-optic transceiver.	Card	Raised when one of following bits is set in card's alarm_reg register: fo_data_pkt_loss (follower only) fiber_txd_fault_ms
4	Fiber Offline	Fiber Offline	Configurable	13 [FibOfflineCfg]	Rx fiber-optic cable is not connected to TLink card or the preceding node is not sending any data. Possible causes are disconnected or damaged fiber-optic cable or transceiver, failure of one of the preceding TLink cards or drives.	Can be ignored in leader drive when ring topology is not used. Otherwise check all fiber-optic cables starting from this drive and going up to leader drive. Check if leader drive is operating and is configured correctly. Check if all preceding follower drives are operating and are configured correctly; if any of the preceding followers is powered down check if external power supply is provided to its TLink card.	Card	Raised, when fiber_rx_loss_ms bit is set in card's alarm_reg register. In leader, it can be used to detect when ring was broken.

TLink Option Module Faults and Alarms (Continued)

External Fault/ Alarm Code	Fault/ Alarm Text	Condition Name	Response Type	Configuration Parameter	Fault/Alarm Definition	Actions	Source	Detection Mechanism
5	System Comm Loss	System Communications Loss	Configurable	12[SysCommLossCfg]	Backplane interface failure was detected. Communication between drive and TLink card is lost. Possible causes include poor connection on backplane's connector or damaged card.	Power down drive before removing or inserting a TLink card. Check if card is inserted firmly into backplane port. Replace the card with a new one	Card ICB FPGA DSP Sys FW	Raised when the system lost communication with the card OR the external_event_timeout bit is set by ICB OR the follower's Control FW doesn't receive a valid data but bit fo_data_pkt_loss isn't set in the card's alarm_reg register OR one of the following bits is set in the card's alarm_reg register: sep_sec_pkt_fault cep_pkt_fault system_event_lost control_event_lost
6	Ext Pwr Loss	External Power Loss	Configurable	14 [ExtPwrLossCfg]	External power supply is not provided. It doesn't affect normal operation but the link to the succeeding drives will be broken if the drive is powered down.	Can be ignored when external power supply is not used. Otherwise, check if external power supply is connected. Check if power supply is operating.	Card	Raised, when bit ext_ps_loss is set in card's alarm_reg register.
7	Sys Misconfig	System Misconfiguration	Alarm 2	N/A	Follower drive is configured differently than the leader drive. A follower drive issues this alarm when the format of the received data from the leader drive does not match the expected format for the mode that is selected in the follower drive.	Check if parameter TLink Mode is configured to the same value in leader and follower drives.	Card	Raised when bit fo_mode_mismatch_fault is set in card's alarm_reg register.
8	Drive Misconfig	Drive Misconfiguration	Alarm 2	—	The selected and active motor control mode is not compatible with the TLink card. The TLink card is only compatible with flux vector control modes. It is not compatible with scalar modes such as volts per Hertz or sensorless vector. Not detected in bypass configuration.	Make sure to use a flux vector control mode when enabling the TLink card. See parameter 0:65 [Pri MtrCtrl Mode], 66 [Pri MtrCtrl Act], 67 [Sec MtrCtrl Mode], 68 [Sec MtrCtrl Act], 75 [Motor Ctrl Sel] and 75 [Mtr Ctrl Sel Act].	Sys FW	Raised when selected control mode is not compatible with TLink.

Viewing Option Module Diagnostic Items

View diagnostic items with any of these drive configuration tools:

- PowerFlex® 20-HIM-A6 or 20-HIM-C6S HIM
- Connected Components Workbench™ software, release 10 or later

For details on how to view diagnostic items with the HIM, see the PowerFlex 20-HIM-A6/-C6S HIM (Human Interface Module) User Manual, publication 20HIM-UM001.

Notes:

Parameter List

TLink Option Module Parameters

The following table contains new parameters that are used with TLink based systems. For details on the parameters and how to program PowerFlex® 755T Drives, see the PowerFlex Drives with TotalFORCE® Control User Manual, publication 750-PM100.

TLink Option Module Parameters

No.	Name	Description	Port	Settings	Default
1	TLink Mode	Sets TLink mode of operation. Enumerations: 0) 'Disabled' - TLink not operating, single drive. 1) 'Mode A' - Leader sends 2 words, synchronized 50 mμ updates.	4, 5, and 6	0 = Bypass 1 = Mode A	0
2	TLink Role	Sets TLink role for the drive. Enumeration: 0) 'Leader' - sources data to nodes. 1) 'Follower' - consumes data from the leader	4, 5, and 6	0 = Leader 1 = Follower	1
3	TLink Status	TLink status field values are: Bit 0 - 'Inactive', TLink is not operating. Bit 1 - 'Tx Active', leader only, TLink is sending data to nodes. Bit 2 - 'Wait Sync', follower only, synchronization in progress. Bit 3 - 'In Sync', follower only, synchronized with leader. Bit 4 - 'Lost Sync', follower only, lost synchronization with leader.	4, 5, and 6	0 = Inactive 1 = Tx Active 2 = Wait Sync 3 = In Sync 4 = Lost Sync	0
10	CommLossAction	Configures how drive behaves when no valid data is coming to the TLink card. It's valid only for follower drive. 'Zero data' (0) - Set reference to 0 'Hold last' (1) - Continue using last valid data received	4, 5, and 6	0 = Zero Data 1 = Hold Last	0
11	Comm WatchdogCfg	Configures how drive reacts to a timeout condition on fiber optic interface. Affects only follower node. 'Ignore' (0) – No action is taken. 'Alarm' (1) – Type 1 alarm indicated. 'Flt Minor' (2) – Minor fault indicated. If running, drive continues to run. 'FltCoastStop' (3) - Major fault indicated. Coast to Stop. 'Flt RampStop' (4) - Major fault indicated. Ramp down to Stop. 'Flt CL Stop' (5) - Major fault indicated. Current Limit Stop.	4, 5, and 6	0 = Ignore 1 = Alarm 2 = Flt Minor 3 = FltCoastStop 4 = Flt RampStop 5 = Flt CL Stop	3
12	SysCommLoss Cfg	Configures how drive reacts to an error on internal (backplane) communication. 'Ignore' (0) – No action is taken. 'Alarm' (1) – Type 1 alarm indicated. 'Flt Minor' (2) – Minor fault indicated. If running, drive continues to run. 'FltCoastStop' (3) - Major fault indicated. Coast to Stop. 'Flt RampStop' (4) - Major fault indicated. Ramp down to Stop. 'Flt CL Stop' (5) - Major fault indicated. Current Limit Stop.	4, 5, and 6	0 = Ignore 1 = Alarm 2 = Flt Minor 3 = FltCoastStop 4 = Flt RampStop 5 = Flt CL Stop	3
13	FibOfflineCfg	Configures how drive reacts to a disconnection of RX fiber optic cable. 'Ignore' (0) – No action is taken. 'Alarm' (1) – Type 1 alarm indicated. 'Flt Minor' (2) – Minor fault indicated. If running, drive continues to run. 'FltCoastStop' (3) - Major fault indicated. Coast to Stop. 'Flt RampStop' (4) - Major fault indicated. Ramp down to Stop. 'Flt CL Stop' (5) - Major fault indicated. Current Limit Stop.	4, 5, and 6	0 = Ignore 1 = Alarm 2 = Flt Minor 3 = FltCoastStop 4 = Flt RampStop 5 = Flt CL Stop	0
14	ExtPwrLossCfg	Configures how drive reacts to a lack of external power supply. 'Ignore' (0) – No action is taken. 'Alarm' (1) – Type 1 alarm indicated. 'Flt Minor' (2) – Minor fault indicated. If running, drive continues to run.	4, 5, and 6	0 = Ignore 1 = Alarm 2 = Flt Minor	0
15	OverTempCfg	Configures how drive reacts to an overtemperature condition. 'Ignore' (0) – No action is taken. 'Alarm' (1) – Type 1 alarm indicated. 'Flt Minor' (2) – Minor fault indicated. If running, drive continues to run. 'FltCoastStop' (3) - Major fault indicated. Coast to Stop. 'Flt RampStop' (4) - Major fault indicated. Ramp down to Stop. 'Flt CL Stop' (5) - Major fault indicated. Current Limit Stop.	4, 5, and 6	0 = Ignore 1 = Alarm 2 = Flt Minor 3 = FltCoastStop 4 = Flt RampStop 5 = Flt CL Stop	3

TLink Option Module Parameters

No.	Name	Description	Port	Settings	Default
201	TLink Out Sel 1	TLink data output word 1 selector. Select the source of the data transmitted by the first output. 'Trq Ref Out' (0) – Selects the torque reference output, which is parameter 10:2072 [Trq Ref Out]. 'Trq Ref Sel' (1) – Selects the selected torque reference, which is parameter 10:2076 [Trq Ref Selected]. 'TrqRefFiltIn' (2) – Selects the unfiltered torque reference, which is parameter 10:2150 [Trq Ref Filt In]. 'VRef Ramped' (3) – Selects the ramped velocity reference output, which is parameter 10:1923 [VRef Ramped].	4, 5, and 6	0 = Trq Ref Out 1 = Trq Ref Sel 2 = TrqRefFiltIn 3 = VRef Ramped	0
202	TLink Out Sel 2	TLink data output word 2 selector. Select the source of the data transmitted by the second output. 'Trq Ref Out' (0) – Selects the torque reference output, which is parameter 10:2072 [Trq Ref Out]. 'Trq Ref Sel' (1) – Selects the selected torque reference, which is parameter 10:2076 [Trq Ref Selected]. 'TrqRefFiltIn' (2) – Selects the unfiltered torque reference, which is parameter 10:2150 [Trq Ref Filt In]. 'VRef Ramped' (3) – Selects the ramped velocity reference output, which is parameter 10:1923 [VRef Ramped].	TLink 4, 5, and 6	0 = Trq Ref Out 1 = Trq Ref Sel 2 = TrqRefFiltIn 3 = VRef Ramped	0
203	TLink IN 1	This parameter is a placeholder for torque and velocity reference indirect selectors to select the first input of the TLink option module. This parameter always displays 0. This parameter is useful as a torque reference or velocity reference. It can be selected as a reference from parameter 10:2000 [Trq Ref A Sel] or 10:1800 [VRef A Sel].	TLink 4, 5, and 6	–	0
204	TLink INput Data 2	Displays as a real number the first input of the TLink option module.	TLink 4, 5, and 6	–	0.00
206	TLink In 2	This parameter is a placeholder for torque and velocity reference indirect selectors to select the second input of the TLink option module. This parameter always displays 0. This parameter is useful as a torque reference or velocity reference. It can be selected as a reference from parameter 10:2000 [Trq Ref A Sel] or 10:1800 [VRef A Sel].	TLink 4, 5, and 6	–	0.00
207	TLink In 2 Real	Displays as a real number the second input of the TLink option module.	TLink 4, 5, and 6	–	0.00

Block Diagrams

TLink Control Overview

Figure 3 shows the control overview using data selectors.

Figure 3 - TLink Option Module Control Overview

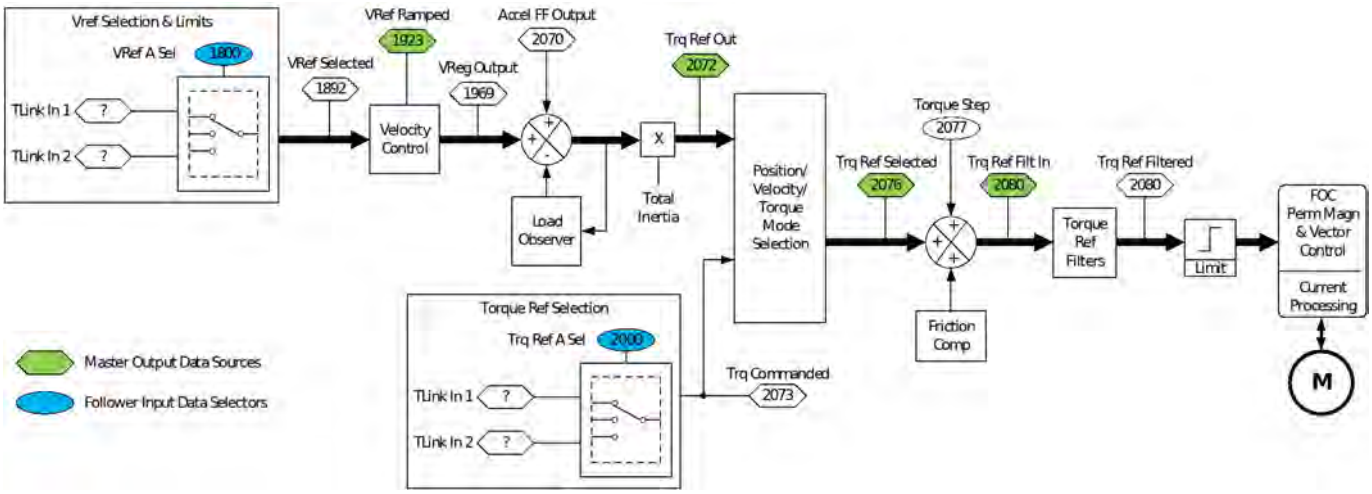

Notes:

Load Sharing Applications

Droop

Droop is the simplest form of load sharing to set up and, therefore, the least precise and less flexible. The precision of this control is dependent on three factors, the drives control algorithm, the motor characteristics, and the type of load being controlled.

Flux vector modes must be used to get data when using TLink option modules in droop applications. The leader drive must provide data on the fiber connection to use the send speed reference with TLink option module.

When two motors are coupled to the same load each slips according to its portion of load, forcing the load to be picked up by the other motor. In this regard, a high slip motor is better for load sharing applications. However in a general sense, the slip of a motor is representative of its efficiency rating. High slip motors tend to have high starting torque but have low efficiency. Though high efficiency motors will slip when loaded, they may not have enough slip at full load to achieve a reasonable degree of load sharing. For this reason, many drives offer a feature that is called “Droop”.

The Droop feature enhances the natural slip of the motor by reducing the output frequency in proportion to load current. Ideally it is only the torque-producing component of the load current that determines the droop. The amount of droop can usually be programmed in the drive in hertz or % speed.

Torque Follower

This type of load sharing requires a drive that can operate in “torque mode”, such as the 1336 IMPACT™ drive. If speed regulation is required, one of the drives may be in “speed mode” (called the “leader”). The drive in speed mode still calculates torque reference value to achieve given speed (that is, velocity). While in speed mode the speed regulator provides a torque command output. This torque command output can be distributed to the other drives on the system (called the “followers” or “Torque Followers”). This torque signal may be scaled at the leader output or the follower input to divide the load sharing in any ratio desired. As the leader’s torque decreases, the followers torque must increase to equalize the torque reference.

In this case, it is possible to have drive and motor sets of varying horsepower sizes each pulling load to the extent of their capability. For example, a 100 horsepower and a 75 horsepower drive and motor set each running at 86% of its power rating could power a system requiring 150 horsepower. The ratio of load sharing can be adjusted such that each motor and drive set pulls a proportional amount of load under all conditions.

Notes:

Additional Resources

These documents contain additional information concerning related products from Rockwell Automation.

Resource	Description
TLink Option Module Installation Instructions, publication 750COM-IN100.	Provides installation information for the TLink option module.
PowerFlex 20-750-TLINK-1 TLink Fiber Optic Cables Product Information, publication 750COM-PC100.	Provides basic safety precautions for fiber-optic cables that are used with TLink option modules.
PowerFlex 750-Series Products with TotalFORCE Control Installation Instructions, publication 750-IN100	Describes steps for mechaniccal installation and for connecting incoming power, the motor, and basic I/O to the PowerFlex 750-Series Adjustable Frequency AC drive.
PowerFlex Drives with TotalFORCE Control Programming Manual, publication 750-PM100	Describes I/O, control, and feedback options. Describes parameters, programming, faults, alarms, and troubleshooting for the PowerFlex Drives with TotalFORCE Control.
PowerFlex 750-Series Products with TotalFORCE Control Technical Data, publication 750-TD100	Provides detailed information on drive specifications, option specifications, and fuse and circuit breaker ratings.
EtherNet/IP Network Devices User Manual, ENET-UM006	Describes how to configure and use EtherNet/IP™ devices to communicate on the EtherNet/IP network.
Ethernet Reference Manual, ENET-RM002	Describes basic Ethernet concepts, infrastructure components, and infrastructure features.
System Security Design Guidelines Reference Manual, SECURE-RM001	Provides guidance on how to conduct security assessments, implement Rockwell Automation products in a secure system, harden the control system, manage user access, and dispose of equipment.
Industrial Components Preventive Maintenance, Enclosures, and Contact Ratings Specifications, publication IC-TD002	Provides a quick reference tool for Allen-Bradley industrial automation controls and assemblies.
Safety Guidelines for the Application, Installation, and Maintenance of Solid-State Control, publication SGI-1.1	Designed to harmonize with NEMA Standards Publication No. ICS 1.1-1987 and provides general guidelines for the application, installation, and maintenance of solid-state control in the form of individual devices or packaged assemblies incorporating solid-state components.
Industrial Automation Wiring and Grounding Guidelines, publication 1770-4.1	Provides general guidelines for installing a Rockwell Automation industrial system.
Product Certifications website, rok.auto/certifications.	Provides declarations of conformity, certificates, and other certification details.

You can view or download publications at rok.auto/literature.

Rockwell Automation Support

Use these resources to access support information.

Technical Support Center	Find help with how-to videos, FAQs, chat, user forums, and product notification updates.	rok.auto/support
Knowledgebase	Access Knowledgebase articles.	rok.auto/knowledgebase
Local Technical Support Phone Numbers	Locate the telephone number for your country.	rok.auto/phonesupport
Literature Library	Find installation instructions, manuals, brochures, and technical data publications.	rok.auto/literature
Product Compatibility and Download Center (PCDC)	Get help determining how products interact, check features and capabilities, and find associated firmware.	rok.auto/pcdc

Documentation Feedback

Your comments help us serve your documentation needs better. If you have any suggestions on how to improve our content, complete the form at rok.auto/docfeedback.

Waste Electrical and Electronic Equipment (WEEE)

At the end of life, this equipment should be collected separately from any unsorted municipal waste.

Rockwell Automation maintains current product environmental information on its website at rok.auto/pec.

Rockwell Otomasyon Ticaret A.Ş. Kar Plaza İş Merkezi E Blok Kat:6 34752, İçerenköy, İstanbul, Tel: +90 (216) 5698400 EEE YÖnetmeliğine Uygundur

AMERICAS: Rockwell Automation, 1201 South Second Street, Milwaukee, WI 53204-2496 USA, Tel: (1) 414.382.2000, Fax: (1) 414.382.4444
EUROPE/MIDDLE EAST/AFRICA: Rockwell Automation NV, Pegasus Park, De Kleetlaan 12a, 1831 Diegem, Belgium, Tel: (32) 2 663 0600, Fax: (32) 2 663 0640
ASIA PACIFIC: Rockwell Automation, Level 14, Core F, Cyberport 3, 100 Cyberport Road, Hong Kong, Tel: (852) 2887 4788, Fax: (852) 2508 1846

Publication 750COM-UM100A-EN-P - June 2021