GuardShield Safe 2 and Safe 2 PAC Safety Light Curtains

Catalog Numbers 445L-P2SxYD

Allen-Bradley
by ROCKWELL AUTOMATION

Guardmaster®

User Manual

Original Instructions

Important User Information

Read this document and the documents listed in the additional resources section about installation, configuration, and operation of this equipment before you install, configure, operate, or maintain this product. Users are required to familiarize themselves with installation and wiring instructions in addition to requirements of all applicable codes, laws, and standards.

Activities including installation, adjustments, putting into service, use, assembly, disassembly, and maintenance are required to be carried out by suitably trained personnel in accordance with applicable code of practice.

If this equipment is used in a manner not specified by the manufacturer, the protection provided by the equipment may be impaired.

In no event will Rockwell Automation, Inc. be responsible or liable for indirect or consequential damages resulting from the use or application of this equipment.

The examples and diagrams in this manual are included solely for illustrative purposes. Because of the many variables and requirements associated with any particular installation, Rockwell Automation, Inc. cannot assume responsibility or liability for actual use based on the examples and diagrams.

No patent liability is assumed by Rockwell Automation, Inc. with respect to use of information, circuits, equipment, or software described in this manual.

Reproduction of the contents of this manual, in whole or in part, without written permission of Rockwell Automation, Inc., is prohibited.

Throughout this manual, when necessary, we use notes to make you aware of safety considerations.

WARNING: Identifies information about practices or circumstances that can cause an explosion in a hazardous environment, which may lead to personal injury or death, property damage, or economic loss.

ATTENTION: Identifies information about practices or circumstances that can lead to personal injury or death, property damage, or economic loss. Attentions help you identify a hazard, avoid a hazard, and recognize the consequence.

IMPORTANT Identifies information that is critical for successful application and understanding of the product.

These labels may also be on or inside the equipment to provide specific precautions.

SHOCK HAZARD: Labels may be on or inside the equipment, for example, a drive or motor, to alert people that dangerous voltage may be present.

BURN HAZARD: Labels may be on or inside the equipment, for example, a drive or motor, to alert people that surfaces may reach dangerous temperatures.

ARC FLASH HAZARD: Labels may be on or inside the equipment, for example, a motor control center, to alert people to potential Arc Flash. Arc Flash will cause severe injury or death. Wear proper Personal Protective Equipment (PPE). Follow ALL Regulatory requirements for safe work practices and for Personal Protective Equipment (PPE).

The following icon may appear in the text of this document.

Identifies information that is useful and can help to make a process easier to do or easier to understand.

Table of Contents

About This Publication

This manual covers the operation and installation of the GuardShield™ Safe 2 POC and PAC safety light curtains.

IMPORTANT	Save these instructions for future use. Recognized technical regulations and quality assurance system ISO 9000 are carefully applied during the development and production of Allen-Bradley® Guardmaster® products. Qualified personnel must follow this technical description to install and commission the GuardShield Safe 2 safety light curtain. A qualified person must inspect and commission the unit.

Rockwell Automation reserves the right to change or revise to the material contained in this publication and is not liable for incidental or consequential damages that result from the furnishing, performance, or use of this material.

Conditions Required for Proper Use

Read and understand these requirements before you select and install the GuardShield Safe 2 safety light curtain. GuardShield safety light curtains are point of operation control (POC) safeguarding devices. These safety light curtains are intended to provide POC safeguarding of personnel on various machineries.

The GuardShield Safe 2 family of safety light curtains is composed of general-purpose presence sensing devices that are designed to protect personnel working on or near machinery.

The installation of GuardShield Safe 2 safety light curtains must comply with all applicable federal, state, and local rules, regulations, and codes.

The employer must install, operate, and maintain the product properly, and the machinery on which the GuardShield Safe 2 presence sensing device is installed.

GuardShield Safe 2 safety light curtains are presence sensing devices and do not protect personnel from heat, chemicals, or flying parts. Safety light curtains are intended to signal a stop of hazardous machine motion when the sensing field is broken.

Only use GuardShield Safe 2 safety light curtains on machinery that can stop anywhere in its stroke or cycle.

Do not use GuardShield Safe 2 safety light curtains on full revolution clutched machinery.

The effectiveness of the GuardShield Safe 2 safety light curtains depends upon the integrity of the machine control circuit. The machinery on which the GuardShield Safe 2 presence sensing device is installed must have fail-safe control circuitry.

Inspect all stopping mechanisms for the machinery regularly to achieve proper operation. The protected machinery must have a consistent reliable and repeatable stopping time.

ATTENTION: Failure to read and follow these instructions can lead to misapplication or misuse of the GuardShield Safe 2 safety light curtains, which can result in personal injury and damage to equipment.

Summary of Changes

This publication contains the following new or updated information. This list includes substantive updates only and is not intended to reflect all changes.

Topic	Page
Updated Range of Uses of the Device	8
Updated Certification and Compliance	49

Additional Resources

These documents contain additional information concerning related products from Rockwell Automation. You can view or download publications at rok.auto/literature.

Resource	Description
UL Standards Listing for Industrial Control Products, publication CMPNTS-SR002	Assists original equipment manufacturers (OEMs) with construction of panels, to help ensure that they conform to the requirements of Underwriters Laboratories.
American Standards, Configurations, and Ratings: Introduction to Motor Circuit Design, publication IC-AT001	Provides an overview of American motor circuit design based on methods that are outlined in the NEC.
Industrial Components Preventive Maintenance, Enclosures, and Contact Ratings Specifications, publication IC-TD002	Provides a quick reference tool for Allen-Bradley industrial automation controls and assemblies.
Safety Guidelines for the Application, Installation, and Maintenance of Solid-state Control, publication SGI-1.1	Designed to harmonize with NEMA Standards Publication No. ICS 1.1-1987 and provides general guidelines for the application, installation, and maintenance of solid-state control in the form of individual devices or packaged assemblies incorporating solid-state components.
Industrial Automation Wiring and Grounding Guidelines, publication 1770-4.1	Provides general guidelines for installing a Rockwell Automation industrial system.
Product Certifications website, rok.auto/certifications.	Provides declarations of conformity, certificates, and other certification details.

Introduction

The GuardShield™ Safe 2 safety light curtain family comprises general-purpose presence sensing devices. These safety light curtains are designed for use on hazardous machinery providing point of operation (POC), and perimeter access (PAC) detection.

The safety light curtain is a self-contained, two box, Safe 2 ESPE (electro-sensitive protective equipment). A formal risk assessment is required to determine if a Type 2 safety device provides a sufficient level of safety for the application.

IMPORTANT These installation instructions address the technical personnel of the machine manufacturer and or the installer of the safety system regarding the proper mounting, configuration, electrical installation, commissioning, operation, and maintenance of the GuardShield Safe 2 safety light curtain. These installation instructions do not provide instruction for the operation of machinery to which the GuardShield Safe 2 safety light curtain is integrated. Only qualified personnel can install this equipment.

Safety Precautions

ATTENTION: Potentially hazardous situation, which, if not prohibited, can lead to serious or deadly injury.
Failure to observe can result in dangerous operation.

Do not use the GuardShield Safe 2 safety light curtain with machines that cannot stop electrically in an emergency.

Always maintain the safety distance between the GuardShield Safe 2 safety light curtain and a dangerous machine movement.

Install additional mechanical protective devices so you cannot reach hazardous machine elements without passing through the protective field.

Install the GuardShield Safe 2 safety light curtain so you can only operate within the sensing area.

Improper installation can result in serious injury.

Never connect the outputs to +24V DC. If the outputs connect to +24V DC, they are in on-state and cannot stop hazardous spots at the machine/application.

Never expose the GuardShield Safe 2 safety light curtain to flammable or explosive gases.

Regular safety inspections are imperative (see Maintenance on page 37).

Do not repair or modify the GuardShield Safe 2 safety light curtain. The GuardShield Safe 2 safety light curtain is not field repairable and can only be repaired at the factory. Removal of either of the GuardShield Safe 2 safety light curtain end caps voids the warranty terms of this product.

Specialist Personnel

Only a qualified person can install, commission, and service the GuardShield Safe 2 safety light curtain. A qualified person is defined as a person who completes the following:

- Has undergone the appropriate technical training.
- The responsible machine operator has instructed them in the operation of the machine and the currently valid safety guidelines.
- Has read and has ongoing access to these installation instructions.

Range of Uses of the Device

The GuardShield Safe 2 safety light curtain is classified as electro-sensitive protective equipment (ESPE). The physical resolution of the POC is 30 mm (1.18 in.). The maximum protective field width of GuardShield Safe 2 safety light curtain POC is:

- 0...18 m (59.1 ft) for the 30 mm (1.18 in.) resolution
- 5...30 m (16.4...98.4 ft) for the 30 mm (1.18 in.) resolution

The protective field height is between 120 mm (4.7 in.) and 1920 mm (75.6 in.).

The maximum protective field width of GuardShield Safe 2 safety light curtain PAC (2 and 3-beam) is 5...30 m (16.4...98.4 ft).

All standard GuardShield Safe 2 POC and PAC safety light curtains have integrated laser alignment.

The device is a Safe 2 ESPE as defined by IEC/EN 61496. Therefore, it is allowed for use with controls in safety category applications up to Safety Category 2 (EN 954-1)/SIL2/SIL CL2 (EN 61508/EN 62061) and PLd (EN ISO 13849-1). This device is suitable for:

- Point of operation protection (hand protection)
- Hazardous area protection
- Access protection

Access to the hazardous point must be allowed only through the protective field. The machine/system is not allowed to start as long as personnel are within the hazardous area. See Examples of Range of Use on page 12 for an illustration of the protective modes.

Depending on the application, additional mechanical protection devices can be required.

Proper Use

Only use the GuardShield Safe 2 safety light curtain as defined in the Examples of Range of Use on page 12. Only qualified personnel can use the device and only on the machine where qualified personnel install and initialize the device.

All applicable product warranties are null and void if you use the device for any other purpose or modify the device in any way.

General Protective Notes and Protective Measures

IMPORTANT	Observe the following items to confirm the proper and safe use of the GuardShield Safe 2 safety light curtain.

The national/international rules and regulations apply to the installation, use, and periodic technical inspections of the safety light curtain, in particular:

- Machinery Directive 2006/42/EC
- Low Voltage Directive 2006/95/EC
- Use of Work Directive 2009/104/EC
- The work safety regulations/safety rules
- Other relevant health and safety regulations

Manufacturers and users of the machine with which the safety light curtain is used are responsible for obtaining and observing all applicable safety regulations and rules.

Observe the notices, in particular the test regulations of these installation instructions (for example, on use, mounting, installation, or integration into the existing machine controller).

Specialist personnel or specially qualified and authorized personnel must implement the tests. Record and document tests so you can reconstruct and retrace the tests at any time.

The installation instructions must be available to the user of the machine where the GuardShield Safe 2 safety light curtain is installed. Specialist personnel must instruct the machine operator in the use of the device and to read the installation instructions.

Product Description

This section provides information on the special features and properties of the safety light curtain and describes the structure and functions of the unit.

Read this section before you mount, install, and commission the unit.

Special Features

- Integrated laser alignment
- Large range with a compact profile
  30 mm (1.18 in.) resolution: 0...18 m
- Tolerant to dust and pollution
- Short-circuit protected semiconductor outputs
- Built-in diagnostic status indicators
- Optical synchronization; no electrical cable is needed between transmitter and receiver
- Lower maintenance and cost-effective

Principles of Operation

The GuardShield Safe 2 safety light curtain consists of a non-matched pair of optic units, for example, transmitter and receiver with the same protective height and resolution. The transmitter and receiver operate on +24V DC. The maximum distance between transmitter and receiver is referred to as the protective field width or range. The protective field height is the distance between the first and last beam in the device.

The transmitter emits sequential pulses of infrared light, which the GuardShield Safe 2 safety light curtain receiver receives and processes. The first beam, next to the GuardShield Safe 2 safety light curtain status indicators, optically synchronizes the timing of the emission and reception of infrared light pulses. This beam is referred to as the synchronization beam. Because the GuardShield Safe 2 safety light curtain transmitter and receiver are optically synchronized, no electrical connection is required between the transmitter and receiver.

The GuardShield Safe 2 safety light curtain receiver has two safety outputs, Output Signal Switching Devices (OSSDs). When the GuardShield Safe 2 safety light curtain transmitter and receiver are properly powered and aligned, all OSSDs current source +24V DC with a switching capacity of 300 mA. The two safety OSSDs are cross monitored and short-circuit protected. Interruption of the sensing field causes the receiver to switch off the sourced current (0V DC).

Restoration of the GuardShield Safe 2 safety light curtain sensing field causes all outputs (OSSDs) to switch to the active high state (resume current sourcing +24V DC with a switching capacity of 300 mA).

GuardShield Safe 2 safety light curtain operates in the Guard Only mode with automatic restart. Other modes of operation, for example, PSDI mode (Break mode), Muting, External Relay Monitoring (EDM) are available with external safety devices.

The GuardShield Safe 2 safety light curtain consists of a transmitter and a receiver.

Figure 1 - GuardShield Safe 2 Safety Light Curtain Components

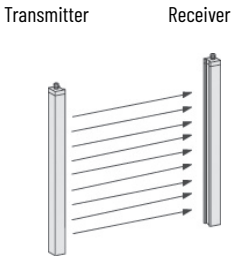

The integrated optical lenses recognize the protective field and the active elements as black surfaces.

The width of the protective field is the length of the light path between sender and receiver and must not exceed the maximum rated width of the protective field.

- 0...18 m (0...59.1 ft) for 30 mm (1.18 in.) resolution
- 5...30 m (16.4...98.4 ft) for 30 mm (1.18 in.) resolution

Perimeter Systems (PAC)

Perimeter systems have several single-beam light barriers. The flexibility of the GuardShield Safe 2 safety light curtain system also allows the production of a vertical entry safeguard according to the standard EN ISO 13855 [2010]. Such systems are composed of active and passive elements in one compact profile. The element length of each is 120 mm (4.72 in.).

The integrated optical lenses recognize the protective field and the active elements as black surfaces. Not-monitored areas (passive elements) are indicated as yellow surfaces.

Figure 2 - Perimeter Systems (2 and 3-beams) According to EN ISO 13855 (2010)

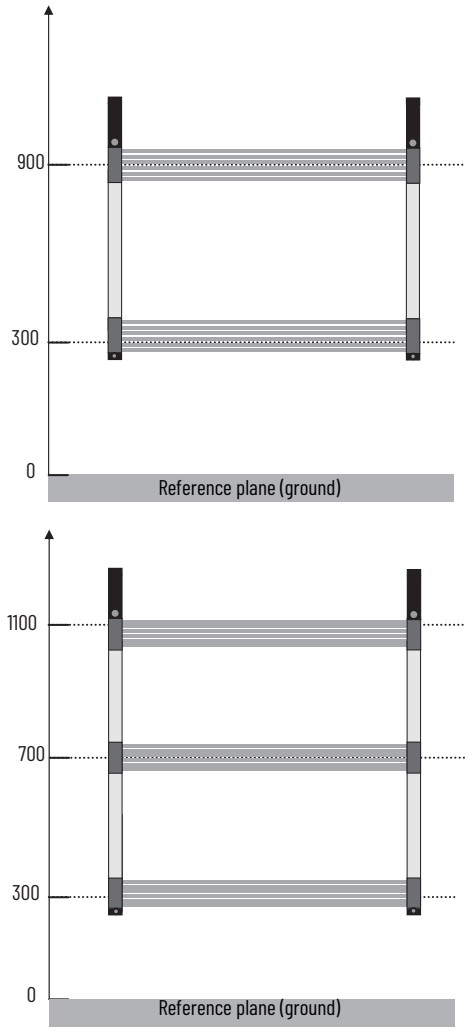

Examples of Range of Use

The GuardShield Safe 2 safety light curtain operates as a proper protective device only if the following conditions are met:

- The control of the machine is electrical.
- The controlled machine is able to stop anywhere in the machines stroke or cycle.
- The transmitter and receiver are mounted so access to the hazard is only through the protective field of the safety light curtain.
- The Restart button is outside the hazardous area so a person working inside the hazardous area cannot operate the button.
- The statutory and local rules and regulations are observed during the installation and use of the device.

IMPORTANT Additional measures can be necessary to confirm that the ESPE does not fail to danger when other forms of light radiation are present in a particular application. For example, use of cableless control devices on cranes, radiation from weld spatter or effects from strobe lights).

GuardShield Safe 2 Safety Light Curtain Laser Alignment

The laser light source in the integrated laser alignment system of the GuardShield Safe 2 safety light curtains is a Class 2, eye safe laser diode with a wavelength of 630 nm.

Control circuitry, which detects reflected laser light from a temporary blockage of the emitted laser light, switches this Class 2, eye safe laser from a low output power state to a high output power state (and back again). A finger that is placed over the laser overlay window triggers this detection. An automatic shutdown feature switches the laser diode from the high-power state to the low-power state if no finger or other interruption is detected for 5 minutes.

During the high output mode of operation, the laser pulses at a rate of approximately 2 Hz to facilitate finger detection in high ambient light conditions.

ATTENTION: To prohibit exposure to laser radiation, do not expose your eyes to the laser. Turn off ILAS if not in use.

Safety Functions

All GuardShield Safe 2 safety light curtains operate as on/off devices. As a result, the OSSD outputs switch off/on according to an obstruction or the clearance of the detection field.

IMPORTANT Test the protective system for proper operation after each change to the configuration.

System Testing

The GuardShield Safe 2 safety light curtain performs a complete system self-test at power-up and switches to the on-state if the system is properly aligned and the protective field is unobstructed.

External Test (Machine Test Signal)

Normally the test input at the transmitter is installed with a short-circuit jumper to activate the transmitter. An external test signal to the GuardShield Safe 2 safety light curtain transmitter triggers a test cycle of the system. The supply or removal of a signal (+24V DC) via a N.C. or N.O. switch at the test input deactivates the transmitter during the test signal simulates an interruption of the protective sensing field (see Electrical Installation on page 27).

Response Time

The response time of the GuardShield Safe 2 safety light curtain depends on the height of the protective field, the resolution, and the number of light beams (see Table 11 on page 40).

IMPORTANT	Determine stop time: The measurement of stop time (T_S) must include the stopping times of all devices in the stop circuit. Not including all device and control system elements when you calculate Ts results in an inaccurate safety distance calculation.

Notes:

Determine the Safety Distance

Mount the safety light curtain with proper safety distance:

- From the point of danger
- From reflective surfaces

US Safety Distance Formula

ATTENTION: Mount GuardShield™ Safe 2 safety light curtains at a sufficient distance from the pinch point or point of operation hazard to confirm that the machine stops before your finger, hand, arms, or body reach the hazard.

Calculate this distance, referred to as the safety distance, before you determine the safety light curtain protective height and mount the safety light curtains on the machine. Failure to calculate this safety distance properly can result in operator injury.

IMPORTANT Regardless of the calculated safety distance, GuardShield Safe 2 safety light curtains can never mount closer than 152.4 mm (6 in.) from the point of operation or pinch point hazard.

In the United States, two formulas are used to calculate the proper safety distance. The first, the OSHA formula, is the minimum requirement for the calculation of the safety distance. The second formula, recommended by Rockwell Automation, is the ANSI formula, which incorporates additional factors to be considered when calculating the safety distance.

OSHA Safety Distance Calculation Formula

The OSHA safety distance formula as specified in CFR Subpart O 1910.217 is as follows:

Ds =	63 X T_S
Ds	Safety Distance in inches
63	Is the OSHA recommended hand speed constant in inches per second?
T_S	Is the total stop time of all devices in the safety circuit measured in seconds? This value must include all components that are involved to stop the hazardous motion of the machinery. For a mechanical power press, it is the stopping time that is measured at approximately the 90° position of the crankshaft rotation.

The T_S number must include the response times of all devices. This number includes the response time of the safety light curtain, the safety light curtain controller (if used), the machine control circuit, and any other devices that react to stop the hazardous motion of the machinery. Not including the response time of a device or devices in the stop time calculation results in insufficient safety distance for the application. This insufficient distance results in operator injury.

ANSI Safety Distance Formula

The ANSI safety distance formula, recommended by Rockwell Automation, is as follows:

$D_s = K \times (T_s + T_c + T_r + T_{bm}) + D_{pf}$

D_s	Minimum safety distance between the safe guarding device and the nearest point of operation hazard, in inches.
K	Hand speed constant in inches per second. The ANSI standard value is 63 inches per second when the operator begins reaching toward the point of operation hazard from rest. ANSI B11.19 1990 E4.2.3.3.5 states "The value of the hand speed constant, K, has been determined by various studies and although these studies indicate speeds of 63 inches/second to over 100 inches/second, they are not conclusive determinations. The employer should consider all factors, including the physical ability of the operator, when determining the value of K to be used."
T_s	Stop time of the machine tool that is measured at the final control element.
T_c	Response time of the control system

A stop time measuring device measures T_s and T_c

T_r	Response time of the presence sensing device (safety light curtain) and its interface, if any. The device manufacturer states this value or you measure it.
T_{bm}	Additional time that is allowed for the brake monitor to compensate for variations in normal stop time.
D_{pf}	Depth penetration factor. It is an added distance to allow for how far into the protective field an object, such as a finger or hand, can travel before being detected. D_{pf} is related to the object sensitivity of the safety light curtain. Object sensitivity is the smallest diameter object that is detected anywhere in the sensing field.

Example

In opto-electronic safeguarding, such as with a perpendicular safety light curtain application with object sensitivity (effective resolution) less than 2.5 inches, you can approximate the D_{pf}, based on the following formula:

D_{pf} (inches) = 3.4 × (object sensitivity – 0.276), but not less than 0.

European Safety Distance Formula

Maintain a safety distance between the safety light curtain and the point of danger. This safety distance confirms that you can only reach the point of danger after the dangerous state of the machine is removed.

The safety distance as defined in EN ISO 13855 and EN ISO 13857 depends on:

- Stop/run-down time of the machine or system. The stop/run-down time is shown in the machine documentation or you must take a measurement to determine.
- Response time of the protective device, for example, GuardShield Safe 2 safety light curtain (see Calculate Safety Distance S on page 17).
- Reach or approach speed.
- Resolution of the safety light curtain and/or beam separation.

Figure 3 - Safety Distance from the Point of Danger

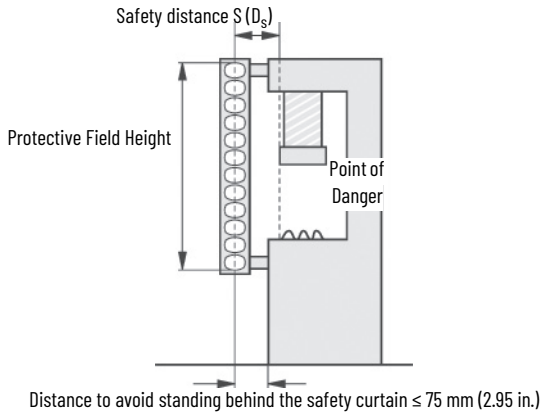

Calculate Safety Distance S

For GuardShield Safe 2 Systems with resolution ≤ 40 mm (1.57 in.). According to EN ISO 13855 and EN ISO 13857:

First, calculate S with the following formula.
S = 2000 × T + 8 × (d – 14) [mm]

Where:

T = Stop/run-down time of the machine + response time of the protective device [s]

d = Resolution of the safety light curtain [mm]

S = Safety distance [mm]

The reach/approach speed is already included in the formula.

- If the result S is ≤ 500 mm (19.6 in.), then use the determined value as the safety distance.
- If the result S is > 500 mm (19.6 in.), then recalculate S as follows:
  S = 1600 × T + 8 × (d – 14) [mm]
- If the new value S is > 500 mm (19.6 in.), then use the newly determined value as the minimum safety distance.
- If the new value S is ≤ 500 mm (19.6 in.), then use 500 mm (19.6 in.) as the safety distance.

Example

Stop/run-down time of the machine = 290 ms
Response time = 30 ms
Resolution of the safety light curtain = 14 mm (0.55 in.)
T = 290 ms + 30 ms = 320 ms = 0.32 s
S = 2000 × 0.32 + 8 × (14 – 14) = 640 mm (25.1 in.)
S > 500 mm (19.68 in.), therefore:
S = 1600 × 0.32 + 8 × (14 – 14) = 512 mm (20.1 in.)

Calculate Safety Distance S (PAC)

If there are perimeter systems or safety light curtains with a resolution d > 40 mm (1.57 in.), the safety distance is calculated for vertical mounting safety light curtains and horizontal approach, according to the formula:

S = 1.6 mm (0.06 in.)/ms x T + 850 mm (33.46 in.)

More detailed information regarding safety distance and safety heights can be found in standard EN 13855 (2010).

Minimum Distance from Reflecting Surfaces

The infrared light from the sender can reflect off shiny surfaces and the system receiver receives the light. If this condition occurs, it can result in an object not being detected when it enters the GuardShield Safe 2 safety light curtain sensing field.

All reflecting surfaces and objects (for example, material bins) must therefore be at a minimum distance from the protective field of the system. The minimum distance a depends on the distance D between sender and receiver.

Figure 4 - Minimum Distance from Reflective Surfaces

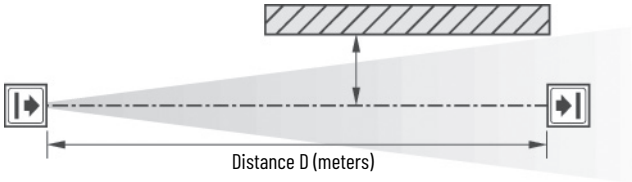

Determine the Minimum Distance from the Reflecting Surfaces

- Determine the distance D [m] sender-receiver
- Read the minimum distance a [mm] from Figure 5

Figure 5 - Minimum Distance from Reflective Surfaces

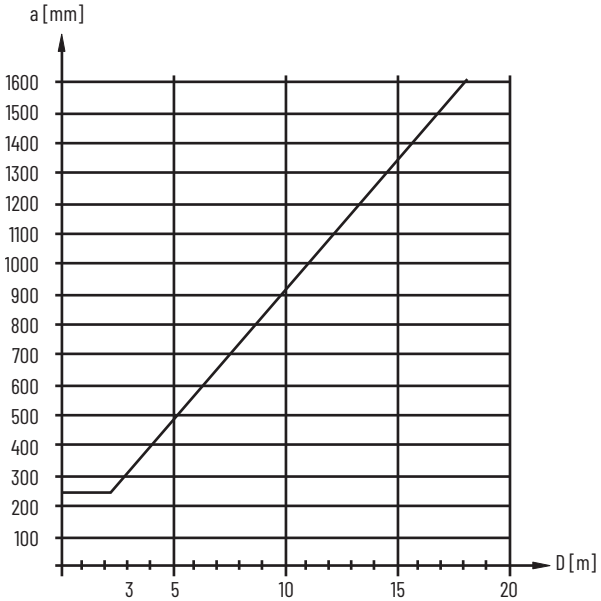

The effective aperture angle for the GuardShield Safe 2 safety light curtain system is ±5° at a mounting distance of > 3.0 m (9.8 ft). Calculate the minimum distance to reflective surfaces depending on the distance between the transmitter and the receiver, with an aperture angle of ±5°. Alternatively, take the appropriate value from the Table 1 on page 19.

Table 1 - Minimum Distance

Distance Between Transmitter and Receiver (Range X)[D] [m (ft)]	Minimum Distance A [mm (in.)]
0.2...3.0 (0.65...9.8)	263 (10.4)
4.0 (13.1)	350 (13.8)
5.0 (16.4)	437 (17.2)
6.0 (19.6)	525 (20.7)
7.0 (22.9)	613 (24.1)
10.0 (32.8)	875 (34.5)
16.0 (52.4)	1400 (55.1)
18.0 (59.1)	1575 (62.0)

Formula: $A = \tan 2.5^\circ \times D$ [mm]

A = Minimum distance to reflective surfaces
D = Distance between transmitter and receiver

Notes:

Installation and Mounting

This section describes the preparation, selection, and installation of the GuardShield™ Safe 2 safety light curtain. Mount and connect both the transmitter and receiver.

IMPORTANT	Install the GuardShield Safe 2 safety light curtain so access to the hazard is only possible through the sensing field of the GuardShield Safe 2 safety light curtain. Auxiliary safe guarding can be required with the GuardShield Safe 2 safety light curtain to meet this requirement.

Determine if the machinery, on which the GuardShield Safe 2 safety light curtain is to be mounted, meets the requirements as specified in About This Publication on page 5. For instance, the machinery must be able to stop anywhere in its stroke or cycle, consistently and repeatedly.

Alignment Procedure

GuardShield Safe 2 Safety Light Curtain

We offer the GuardShield Safe 2 safety light curtain with an integrated laser alignment system. This system has a constantly powered Class 2, eye safe laser in the bottom of the GuardShield Safe 2 safety light curtain transmitter and in the top of the receiver. Each laser emits a low level of visible light. Block this light below the finger symbol to cause the light to reflect back to a photo sensor, which changes the condition of the laser light. If this light is at a low level, interruption causes the laser to emit a highly visible level of light. This interruption of the visible light in the same location causes the laser to switch to a low level of emission. The emission of visible light also changes to a low level after 5 minutes of activation.

Cycle power to cause the system to power up and enter the on-state.

1. Properly locate the GuardShield Safe 2 safety light curtain pair from the point of operation hazard after you calculate the safety distance.
2. Use the GuardShield Safe 2 safety light curtain mounting brackets to mount the transmitter and receiver so they face one another and are positioned in the same direction. For reference, the status indicators are opposite one another. The units must be parallel to each other and be in position at the same height. Turn on power to GuardShield Safe 2 safety light curtain system.

Figure 6 - Transmitter and Receiver Layout

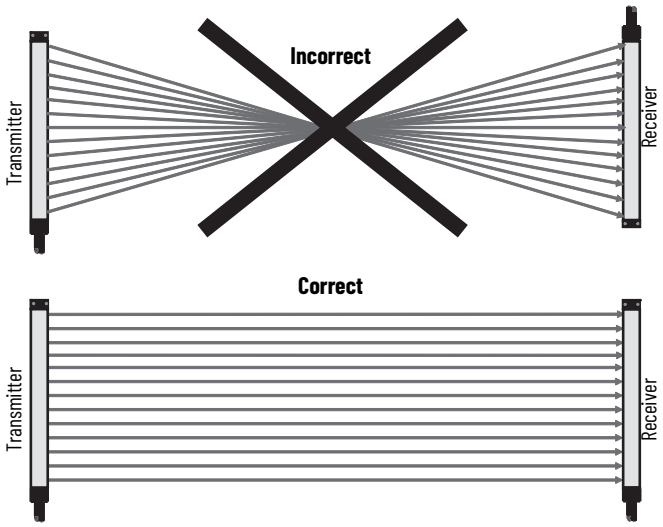

3. To turn on each laser and place a finger or hand in front of each laser (close to the finger symbol ☞).
4. For optimal alignment, adjust the transmitter and receiver so both visible laser beams press the laser targets opposite each laser. A small deviation around the target is allowable and is harmless as long as it is within the aperture angle.
5. Tighten all screws firmly.
6. Switch off the ILAS when aligned.

When you mount perimeter systems, adjust the heights according to the recommendations in the local standards and regulations (Europe: EN ISO 13855 [2010]) (see Figure 2 on page 11).

The GuardShield Safe 2 safety light curtain is suitable for most operating environments (IP65 environmental rating). Observe a proper safety distance and adequate protective height.

Remarks to ILAS

Due to dimensional tolerances, the visible ILAS laser beam can be off-center from the target when the safety light curtain is aligned optimally in the center of the operating range. To find the optimal operating point after alignment with ILAS, move the axis in an X (left, right) and Z (up, down) direction. The optimal operating point is in the middle of the two endpoints, where the receiver output switches from active to inactive condition.

For optimal alignment of the safety light curtain, the ILAS light point can deflect from the ILAS target point. The maximum deflection adds up to the following value due to the operating distance:

2 m (6.56 ft)	R = 7 mm (0.27 in.)	D = 7 mm (0.27 in.)
6 m (19.7 ft)	R = 20 mm (0.79 in.)	D = 21 mm (0.83 in.)
9 m (29.5 ft)	R = 30 mm (1.18 in.)	D = 32 mm (1.26 in.)
18 m (59.0 ft)	R = 60 mm (2.36 in.)	D = 63 mm (2.48 in.)
30 m (98.4 ft)	R = 99 mm (3.90 in.)	D = 105 mm (4.13 in.)

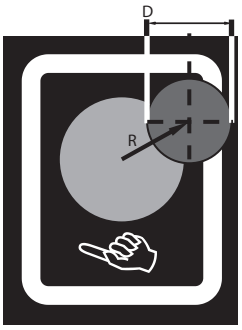

Correct Installation

Operators cannot reach hazardous machine parts without passing through the protective field.

Operators must not step between protective field and hazardous machine parts (by-pass prevention).

Incorrect Installation

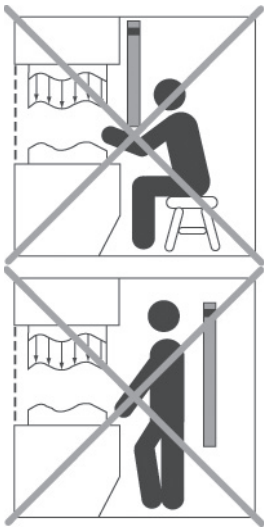

Operators can reach hazardous machine parts without passing through the protective field.

Operators can step between protective field and hazardous machine parts.

Mount the GuardShield Safe 2 safety light curtain at the proper distance from the point of operation hazard. This distance is referred to as the safety distance.

Figure 7 - Determine Machine Stop Time and Safety Distance

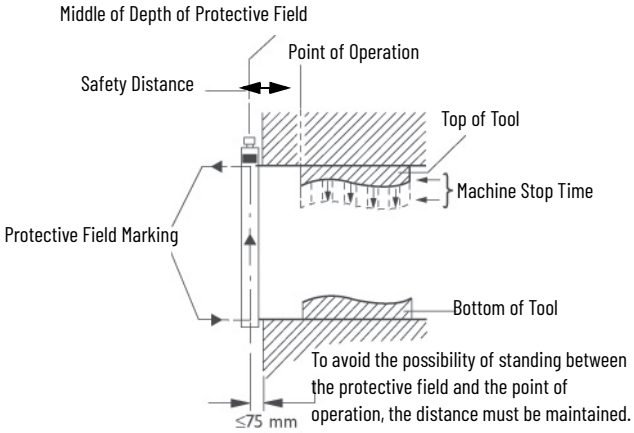

After the installation and alignment of the GuardShield Safe 2 safety light curtain, the protection field must be tested with the test rod for the corresponding resolution [30 mm (1.18 in.)] according to Figure 8 on page 24.

Figure 8 - Correct Testing of the Protective Field Using a Test Rod

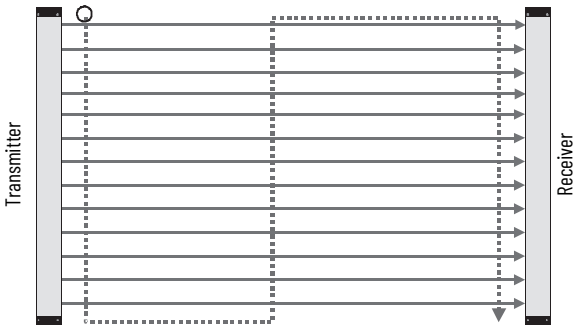

Multiple GuardShield Safe 2 Safety Light Curtains

When two or more GuardShield Safe 2 safety light curtains mount close to one another, it is possible for the receiver of one GuardShield Safe 2 safety light curtain pair to receive infrared light from the transmitter of another GuardShield Safe 2 safety light curtain pair.

There are various techniques to prohibit or reduce the possibility of optical interference from GuardShield Safe 2 safety light curtains that mount in the same plane. The simplest method is to alternate transmitter and receiver pairs so that the receiver from a second pair faces away from the transmitter of another pair nearby. You can also place a physical barrier between pairs to prohibit the infrared light from reaching another GuardShield Safe 2 safety light curtain pair.

Figure 9 - Multiple GuardShield Safe 2 Safety Light Curtain Alignment Options

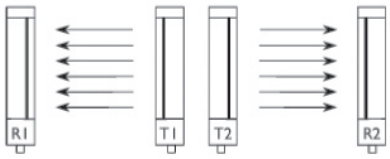

Transmitters emit in opposite directions.
Each receiver receives only the beams of the appropriate transmitter.

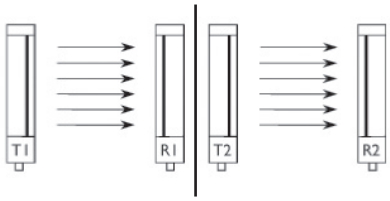

Transmitters emit in the same direction:
Optical (physical) barrier necessary

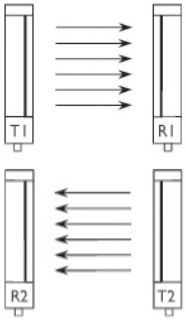

Positioning of the safety light curtain:
Transmitters emit in opposite directions.

Mounting Brackets

The GuardShield Safe 2 safety light curtain mounts using brackets, which attach to the side of both the transmitter and receiver. In applications with higher shock and vibration, additional brackets can be necessary to mount the GuardShield Safe 2 safety light curtain at a proper safety distance from the machinery hazard.

Table 2 - Safe 2 Safety Light Curtains Mounting Bracket Options [mm (in.)] (1)

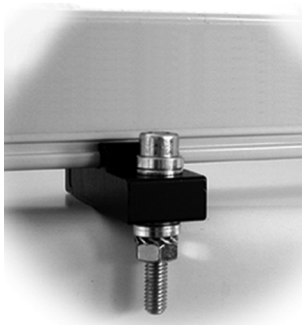	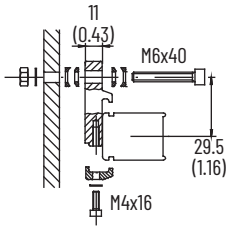 445L-AF6140 Standard mounting bracket supplied with each safety light curtain. For side mounting. Adjustable by ±4°
	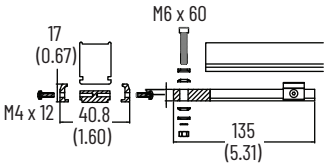 445L-AF6144 Vertical mounting brackets (optional) For mounting in the vertical axis of the safety light curtain. Adjustable by ±4°
	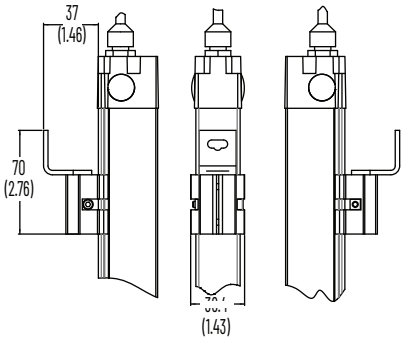 445L-AF6141 180° Mounting, rotation ±90° For applications where the mounting angle is not set using the mounting frame.

(1) Two brackets included per kit.

Safe 2 Shock Mounting Kit

Rockwell Automation offers a shock and vibration isolation kit to mount the Safe 2 safety light curtain vertically. This kit effectively protects the internal optical and electronic components of the Safe 2 safety light curtain. For the best performance of the shock and vibration isolation kit, use with the 445L-AF6144 Safe 2 vertical mounting brackets.

Figure 10 - Shock Isolator [mm (in.)]

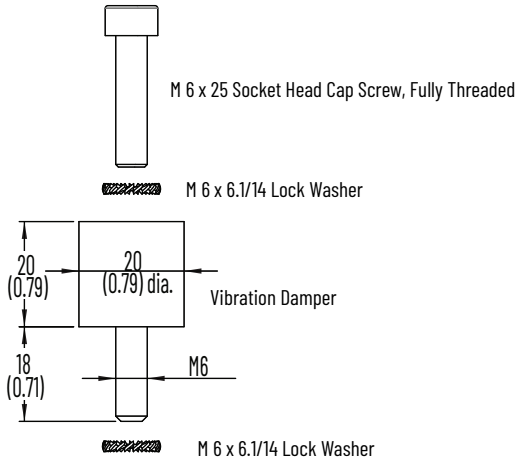

Electrical Installation

Connections

Power Supply

The external voltage supply (+24V DC) must meet the requirements of IEC 61496-1. In addition, you must fulfill the following requirements:

- The power supply bridges a short-term power failure of 20 ms.
- The power supply has double insulation between the primary and the secondary side.
- The power supply is guarded against overload.
- The power supply corresponds to the guidelines of the EWG (industrial environment).
- The power supply corresponds to the Low Voltage Directives.
- The grounded conductor of the power supply device must connect to a grounded conductor PE.
- The maximum deviation of the voltage levels is 24V DC ±20%.

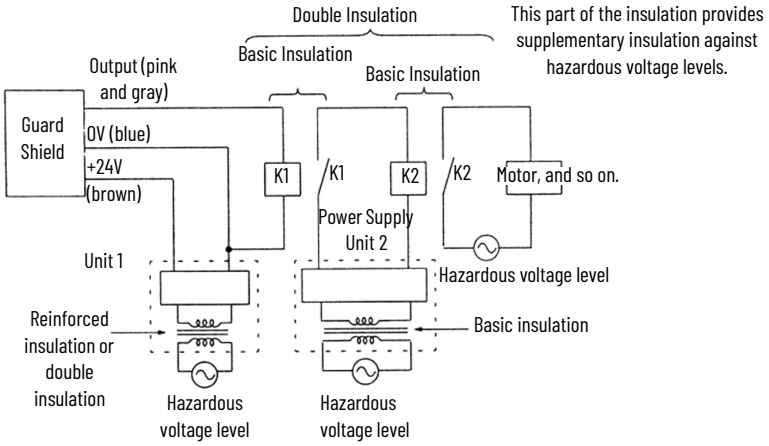

Cables and Connectors

The GuardShield™ Safe 2 safety light curtain transmitter and receiver connectors are 5-pin M12 quick-disconnect connectors. Shielded and non-shielded cordsets are offered in lengths from 2...30 m (6.56...98.4 in.).

Figure 11 - M12 Connector Pin Assignments

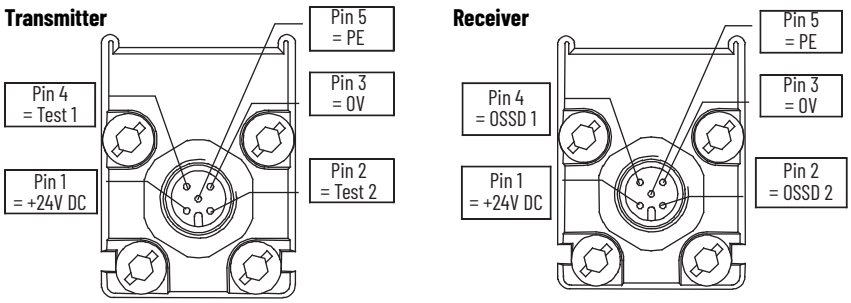

M12 Connector Dimensions

Figure 12 - 5-pin Concave Connection for Safe 2 Safety Light Curtain [mm (in.)]

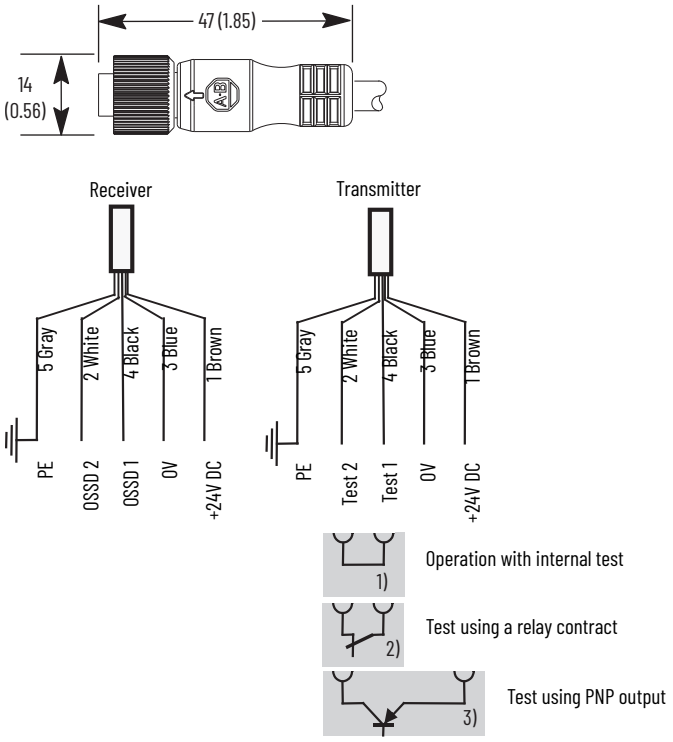

Table 4 - GuardShield Safe 2 Safety Light Curtain Receiver Connector

Concave Top View	Color	Pin No.	Signal
			Receiver
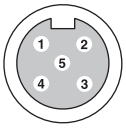	Brown	1	+24V
	White	2	OSSD 2
	Blue	3	0V
	Black	4	OSSD 1
	Gray	5	Ground (PE)

Table 5 - GuardShield Safe 2 Safety Light Curtain Transmitter Connector

Concave Top View	Color	Pin No.	Signal
			Receiver
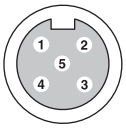	Brown	1	+24V
	White	2	Test 2
	Blue	3	0V
	Black	4	Test 1
	Gray	5	Ground (PE)

Test Input to Transmitter

Normally, install the test input at the transmitter with a short circuit jumper to activate the transmitter. If you desire an external test, connect a contact to the test input.

The timing of test input is as follows:

Table 6 - Test Timing Diagram

Time	Description	Value in ms
t_1	Response time on test signal	$\leq t_R + 15$
t_2	Time to test	$> t_1$
t_3	Restart time after test	≤ 800

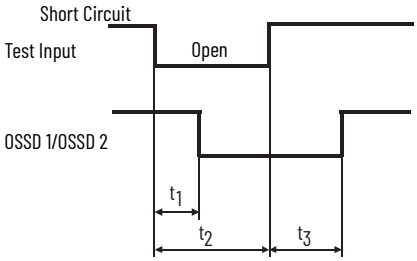

t_R means the response time of the respective Safe 2 type (see Date Code and Label on page 38).

Internal Test	Description	Value
Continuous test current	I	10 mA
Peak test current	I_P	100 mA
Time of peak test current	t_P	20 µs

Internal Test	Transmitter	Test Indicator Transmitter
Short circuited (closed)	Active	Green
Open	Inactive	Red

Bring Into Operation

After the power is applied to the GuardShield Safe 2 safety light curtain and the automatic power-up test is successfully complete, the green Power status indicator on the receiver and transmitter illuminates. The system is now ready to operate.

The automatic power-up test is only successful, if transmitter and receiver are properly aligned, correctly connected and the protective field is not interrupted.

Any intrusion of an object into the protective field switches off the OSSD within the specified response time and the status indicator at the receiver toggles from green to red.

Outputs

The two redundant Output Signal Switching Devices (OSSD) are fully monitored. Any short circuits are detected. The maximum load is 0.3 A, higher currents are limited through short circuit protection. Use external safety interfaces to realize increased output loads.

The output voltage at the solid-state outputs is dependent on the power supply and the output load.

Typical Wiring Diagram to MSR127 Safety Relay Module

The interfacing of the safety light curtain with the machine control must be control reliable. For example, a correct interface with a safety PLC or safety relays with positive guided relay contacts.

ATTENTION: The safety devices and the interconnection to the machinery must comply with the basic safety requirements as mentioned in the current regulations and standards.
Direct interfacing of a safety light curtain to machine control that does not meet the necessary safety integrity level. For instance, the use of general-purpose PLCs or general-purpose relays can cause injury to persons.

Consult a professional safety engineer.

Typical Wiring Diagrams

Safe 2 or Safe 2 PAC Connection with Guardmaster SI Safety Relay

Figure 13 - Safe 2 Safety Light Curtain to Guardmaster SI Safety Relay, Manual Reset

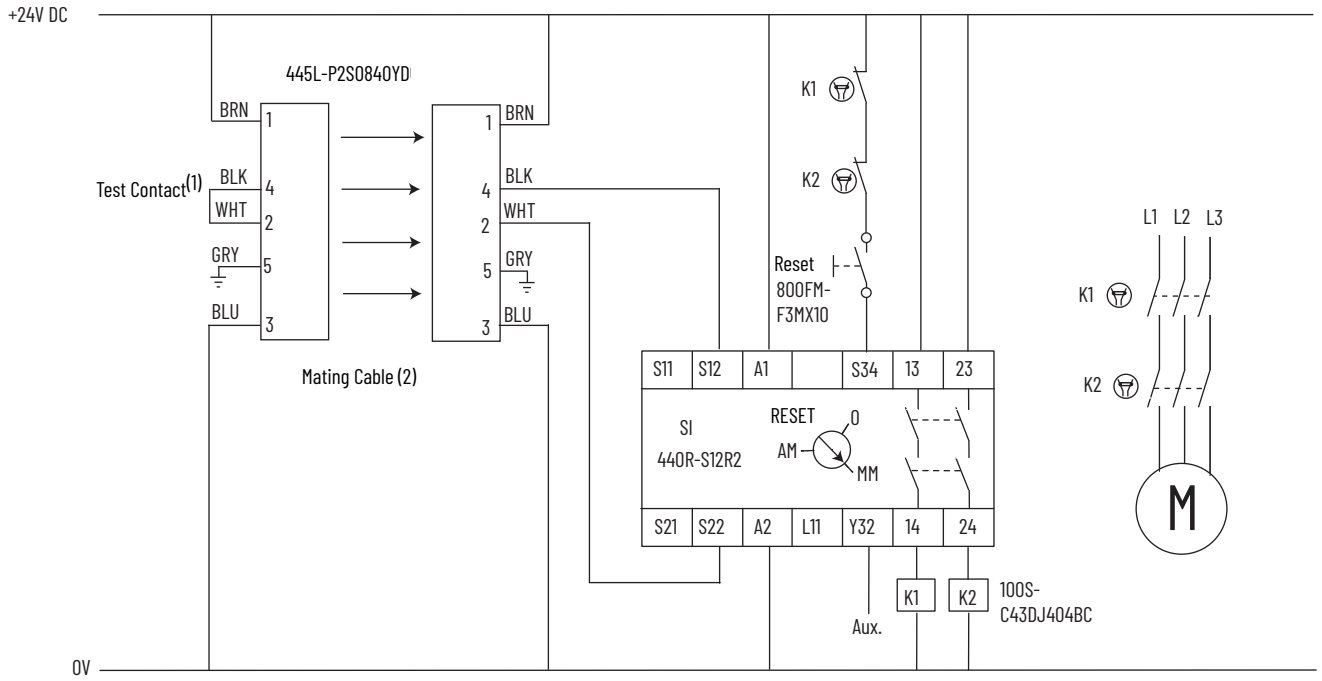

(1) Jumper required for normal operation.

Figure 14 - Safe 2 or Safe 2 PAC Safety Light Curtain for Manual Reset Mode Using MSR127TP Safety Relay Module

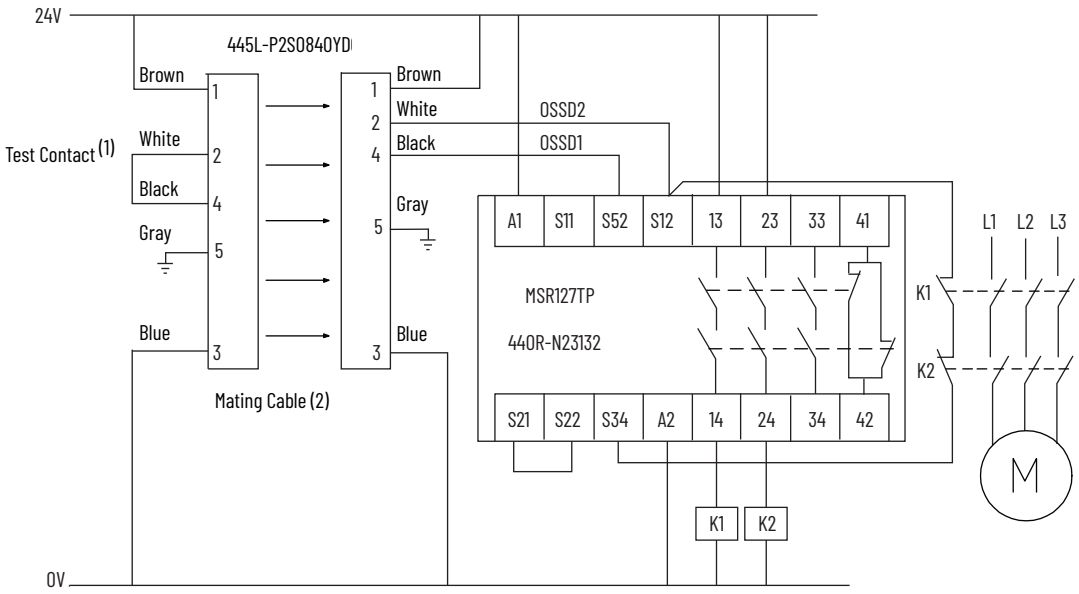

(1) Jumper required for normal operation.

Figure 15 - Safe 2 or Safe 2 PAC Safety Light Curtain for Two-sensor Muting Using MSR42 Multi-function Safety Module and MSR45E Extension Module

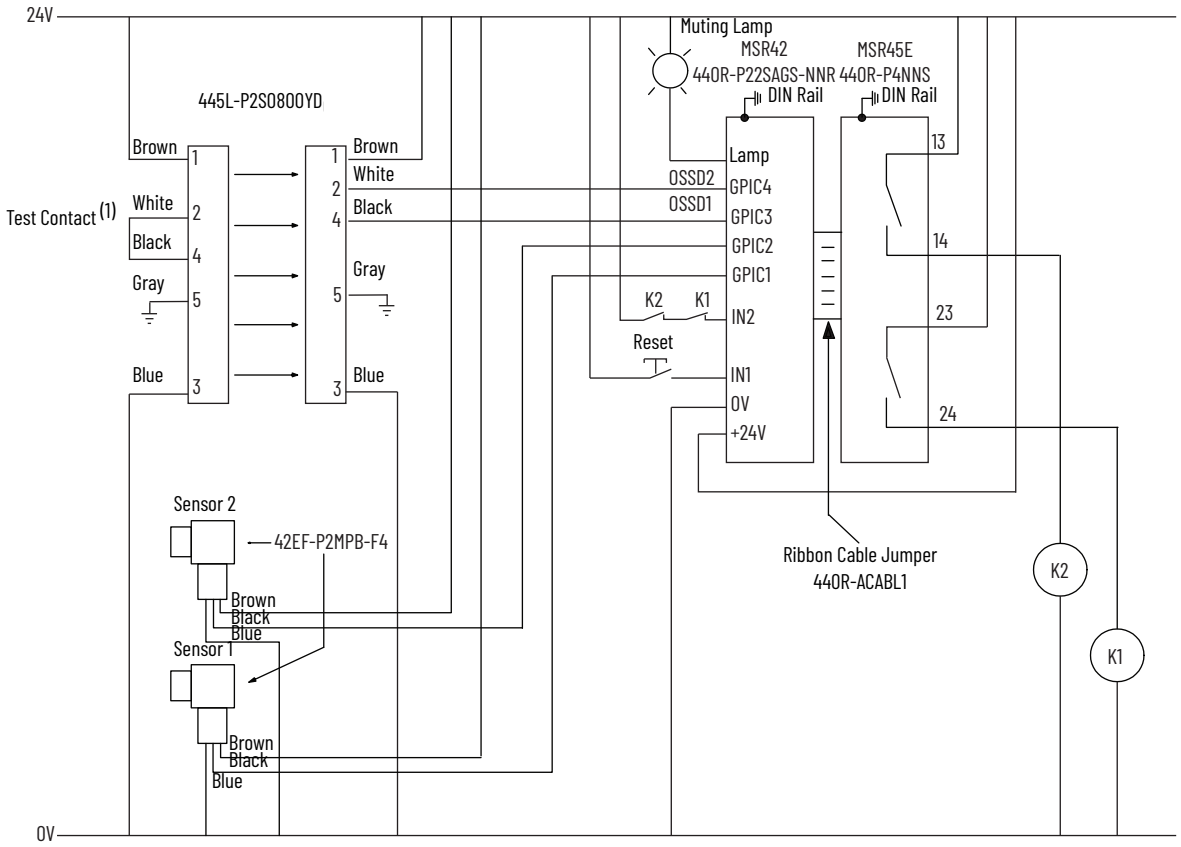

(1) Jumper required for normal operation.

Troubleshooting

The safety light curtain conducts an internal self-test after startup. An appropriate signal combination on the status indicators of the transmitter or the receiver indicates if an error occurs.

ATTENTION: Confirm that all power to the machine and safety system is disconnected during electrical installation.

System Status Indicators

Figure 16 - Status Indicators

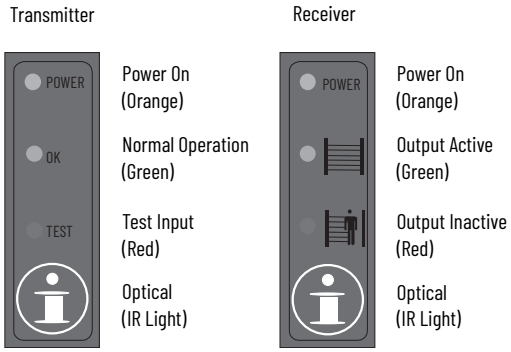

The status indicators on the transmitter and receiver indicate possible errors and operation status.

Table 7 - Transmitter

Status	Orange (Power)	Status Indicator	
		Green (Ok)	Red (Test)
No power supply (external)	Off	Off	Off
Test input closed (external)	On	On	Off
Test input opens (external)	On	Off	On
Controller error (internal)	Flashing	Off	On
Protective field error (internal)	Flashing	Off	Flashing

Table 8 - Receiver

Status	Orange (Power)	Status Indicator	
		Green (Protective Field Not Interrupted)	Red (Protective Field Interrupted)
No power supply (external)	Off	Off	Off
No sufficient power (external)	On	Off	Off
OSSD on (on-load operation, protective field is not interrupted, normal)	On	On	On
OSSD off (offload operation, protective field interrupted, or insufficient alignment of the system)	Flashing	Off	On
OSSD error (external, short circuit between OSSD 1 and OSSD 2, towards 0V or 24V DC)	All 3 s short time	Off	Flashing
Controller error (internal)	Irregular flashing	Off	On
Protective field error (internal)	Flashing	Off	Flashing

Errors

You can resolve an external interface error by correcting the installation, due to:

- Receiver: Short circuit of both OSSDs, of OSSD to $U_{sp,}$ or of OSSD to GND
- Transmitter: Test input open
- No power or power supply too low
- Inadequate adjustment of transmitter and receiver

Internal error (orange Power status indicator flashes irregularly): Exchange the component.

Table 9 - Normal Operation

Transmitter	Receiver	Operation Status
Test input closed closed	OSSD on OSSD off	Protective field free Protective field interrupted
Test input open	OSSD off	Test active

Checklist

IMPORTANT Before power-up of the GuardShield™ Safe 2 safety light curtain system, review the Checklist.

Cable check before initiation:

1. The power supply solely connects to the GuardShield Safe 2 safety light curtain.
2. The power supply is a 24V DC device, which must comply with all applicable standards of the Machinery Directive 2006/42/EC, and the product standard (IEC 61496).
3. Proper polarity of the power supply at the GuardShield Safe 2 safety light curtain.
4. The transmitter connection cable properly connects to the transmitter, the receiver connection cable properly connects to the receiver.
5. The double insulation between the safety light curtain output and an external potential is confirmed.
6. The OSSD outputs do not connect to +24V DC or OV.
7. The connected switching elements (load) do not connect to 24V DC.
8. For a self-testing safety light curtain system, the test output and input of the transmitter are short circuited.
9. No connection to a conventional power supply.
10. If you use two or more GuardShield Safe 2 safety light curtains, confirm that each system is properly installed to avoid optical interference.

Switch on the GuardShield Safe 2 safety light curtain and check its function by observing the following:

2 seconds after switching on, the system works properly if the protection field is free of obstructions.

Notes:

Safety Instructions

Maintenance

ATTENTION: Never operate the GuardShield™ Safe 2 safety light curtain before you conduct the Daily Inspection. Improper inspection can lead to serious injury.

IMPORTANT
- For safety reasons, record all inspection results.
- Only persons, who clearly understand the functioning of the GuardShield Safe 2 safety light curtain and of the machine, can conduct an inspection.
- If installer, engineer, and operator are different people, confirm that you have sufficient information available to conduct the inspection.

Daily Inspection

1. Approach to hazardous machine parts must only be possible by passage through the protective field of the GuardShield Safe 2 safety light curtain.
2. Operators cannot step through the sensing area while working on dangerous machine parts.
3. The safety distance of the application is greater than the calculated value.
4. The optic front cover is not scratched or dirty.

Operate the machine and check if the hazardous movement stops under the following circumstances.

1. The protective field is interrupted.
2. The test rod directly in front of the transmitter, directly in front of the receiver, and in the middle between transmitter and receiver interrupts the protective field and the hazardous machine movement stops immediately.
3. No hazardous machine movement while the test rod is anywhere within the protective field.
4. The power supply of the GuardShield Safe 2 safety light curtain is turned off.
5. If the blanking function is activated, check all sections of the protective field with the appropriate test piece.

IMPORTANT If any of the conditions do not stop the hazardous motion of the machine, do not allow the protected machine to be placed in operation.

6-month Inspection

Check the following items every 6 months or whenever a machine setting is changed.

1. Machine stops or does not obstruct any safety function.
2. The latest machine or connection modifications have no effect on the control system.
3. The outputs of the GuardShield Safe 2 safety light curtain properly connect to the machine.
4. The total response time of the machine is shorter than the calculated value.
5. Cables and plugs of the GuardShield Safe 2 safety light curtain are in good condition.
6. Mounting brackets, caps and cables are tightly secured.

Cleaning

If the optic front cover of the GuardShield Safe 2 safety light curtain is dirty, the outputs of the GuardShield Safe 2 safety light curtain turn off. Use a clean, soft cloth to rub the cover without pressure. Do not apply an aggressive or abrasive cleaner, which can attack the surface.

Date Code and Label

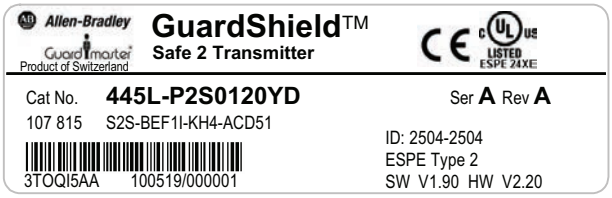

AABCCDEE

AA =	Production place (AL= Mexico, 3T= Switzerland)	
B =	Year	
CC =	Day (LA = 001, LB = 002, ...)	
D =	Internal Rockwell Automation product code	
	4 =	GS Safe 2 System
	5 =	GS Safe 2 Tx
	6 =	GS Safe 2 Rx
EE =	Counter (AA=001, AB=002, ...)	

Example: 3TOQI5AA

AA =	3T	= Produced in Switzerland)
B =	O	= Year 2010
CC =	QI	= Day 138 = 19 May
D =	5	= Transmitter
EE =	AA	= 001

Technical Specifications

Attribute	Value
Light beams, min...max	8...256
Protective field	120...1920 mm (4.7...75.6 in.) in 120 mm (4.7 in.) increments for Standard GuardShield Safe 2 safety light curtain
Resolution	30 mm (1.18 in.)
Range	• 30 mm (1.18 in.); 0...18.0 m (0...59.0 ft) • PAC 2 and 3 beams: 5...30.0 m (16.4...98.4 ft)
Response time	OSSD – on to off (reaction times), see Table 11 on page 40
Power supply	24V DC ±20%; power supply must meet the requirements of IEC 60204-1 and IEC 61496-1.
Power consumption, max	< 500 mA (unloaded)
IR transmitter	Infrared status indicator (wave length 950 nm)
Aperture angle	According to IEC 61496-2, within ±5° for transmitter and receiver
Operating condition	IR transmitter on
Functions	• Guarding: On/off operation with clear/obstructed detection area • Test function: Triggering of system test via external switch
Input transmitter machine test signal	Minimum duration 100 ms • Voltage level for Logic 0: 0...5V DC • Voltage level for Logic Hi 1: > 16V DC
Outputs	Safety outputs (OSSDs): 2 solid-state outputs, switching capacity 300 mA (max), short circuit protection
QD connectors	5-pin M12 for transmitter and receiver
Cable length, max	60 m (197 ft)
Ambient temperature	• Operation: 0...55 °C (32...131 °F) • Storage: -20...+60 °C (-4...+140°F)
Operating humidity	Up to 95% (without condensation) 20...55 °C (68...131 °F)
Enclosure rating	IP65
Vibration resistance	Per IEC 61496-1, IEC 60068-2-6 • Frequency 10...55 Hz • Amplitude 0.35 mm (0.013 in.)
Shock	Per IEC 61496-1, IEC 60068-2-29 Acceleration 10 g, duration 16 ms
Material	• Housing: Aluminum • Cover: PC (polycarbonate)
Approximate dimensions	Cross section: 30 x 40 mm (1.18 x 1.57 in.)
Accessories included	Test rod, mounting brackets, operating instructions
Approvals	TÜV Rheinland, IEC 61496 Parts 1 and 2, UL 61496 Parts 1 and 2, UL 1998
Safety classification	Type 2 per EN/IEC 61496, Category 2 EN/ISO 13849, SIL 2, EN 62061, PLd, EN/ISO 13849
PFHd (1)	7.93E-9 [worst case figure; 32 modules x 30 mm (1.18 in.), L = 3840 mm (151.18 in.)]
T_M (mission time)	20 years (EN ISO 13849)

(1) Probability of dangerous failure per hour according to EN/IEC 62061 and EN/IEC 61508 (Continuous and High Demand mode)

Table 10 - Standard GuardShield Safe 2 Safety Light Curtain with Integrated Laser Alignment System, 30 mm (1.18 in.) Resolution, 0...18 m (0...59 ft) Range of Operation

Safety Light Curtain Pair	Transmitter	Receiver	Protective Heights [mm (in.)]	Response Time	Weight per Pair [kg (lb)]
445L-P2S0120YD	445L-T2S0120YD	445L-R2S0120YD	120 (4.7)	7.9 ms	1.9 (4.19)
445L-P2S0240YD	445L-T2S0240YD	445L-R2S0240YD	240 (9.5)	10.5 ms	2.2 (4.85)
445L-P2S0360YD	445L-T2S0360YD	445L-R2S0360YD	360 (14.2)	13.2 ms	2.6 (5.73)
445L-P2S0480YD	445L-T2S0480YD	445L-R2S0480YD	480 (18.9)	15.8 ms	3.0 (6.61)
445L-P2S0600YD	445L-T2S0600YD	445L-R2S0600YD	600 (23.6)	18.5 ms	3.4 (7.5)
445L-P2S0720YD	445L-T2S0720YD	445L-R2S0720YD	720 (28.4)	21.1 ms	4.0 (8.82)
445L-P2S0840YD	445L-T2S0840YD	445L-R2S0840YD	840 (33.1)	23.8 ms	4.4 (9.7)
445L-P2S0960YD	445L-T2S0960YD	445L-R2S0960YD	960 (37.8)	26.3 ms	4.8 (10.58)
445L-P2S1080YD	445L-T2S1080YD	445L-R2S1080YD	1080 (42.5)	29.1 ms	5.4 (11.9)
445L-P2S1200YD	445L-T2S1200YD	445L-R2S1200YD	1200 (47.2)	31.6 ms	5.7 (12.57)
445L-P2S1320YD	445L-T2S1320YD	445L-R2S1320YD	1320 (52)	34.3 ms	6.1 (13.45)
445L-P2S1440YD	445L-T2S1440YD	445L-R2S1440YD	1440 (56.7)	37 ms	6.5 (14.33)
445L-P2S1560YD	445L-T2S1560YD	445L-R2S1560YD	1560 (61.4)	39.6 ms	6.9 (15.21)
445L-P2S1680YD	445L-T2S1680YD	445L-R2S1680YD	1680 (66.1)	42.3 ms	7.2 (15.87)
445L-P2S1800YD	445L-T2S1800YD	445L-R2S1800YD	1800 (70.9)	44.9 ms	7.5 (16.53)
445L-P2S1920YD	445L-T2S1920YD	445L-R2S1920YD	1920 (75.6)	47.6 ms	8.3 (18.3)

Table 11 - GuardShield Safe 2 Safety Light Curtain PAC (Perimeter)

Cat. No.	Transmitter	Receiver	Number of Beams	Protective Heights [mm (in.)]	Response Time [ms]	Range [m (ft.)]	Weight per Pair [kg (lb)]
445L-P2S2500YD	445L-T2S2500YD	445L-R2S2500YD	2	600 (23.6)	10.5	5 (16.4)...30 (98.4)	3.0 (6.61)
445L-P2S3400YD	445L-T2S3400YD	445L-R2S2500YD	3	840 (33.0)	13.2	5 (16.4)...30 (98.4)	3.9 (8.6)

Catalog Number Explanation

445L	-	P	2	S	0720	Y	D
		a		b	c	d	e

a	
Type of Unit	
Code	**Description**
P	Pair
T	Transmitter
R	Receiver

b	
Resolution/Range	
Code	**Description**
S	30 mm (1.81 in.) /0...18 m (0...59.05 ft) or PAC 5...30 m (16.4...98.42 ft)

c	
Protected Height [mm (in.)]	
Code	**Description**
0120	120 (4.72)
0240	240 (9.45)
0360	360 (14.17)
0480	480 (18.90)
0600	600 (23.62)
0720	720 (28.35)
0840	840 (33.07)
0960	960 (37.80)
1080	1080 (42.52)
1200	1200 (47.24)
1320	1320 (51.97)
1440	1440 (56.69)
1560	1560 (61.42)
1680	1680 (66.14)
1800	1800 (70.87)
1920	1920 (75.59)
2500	2500 (28.42)
3400	3400 (133.86)

d	
Environmental Rating	
Code	**Description**
Y	IP65

e	
Connection Option	
Code	**Description**
D	Standard M12

Approximate Dimensions

Table 12 - Safe 2 [mm (in.)]

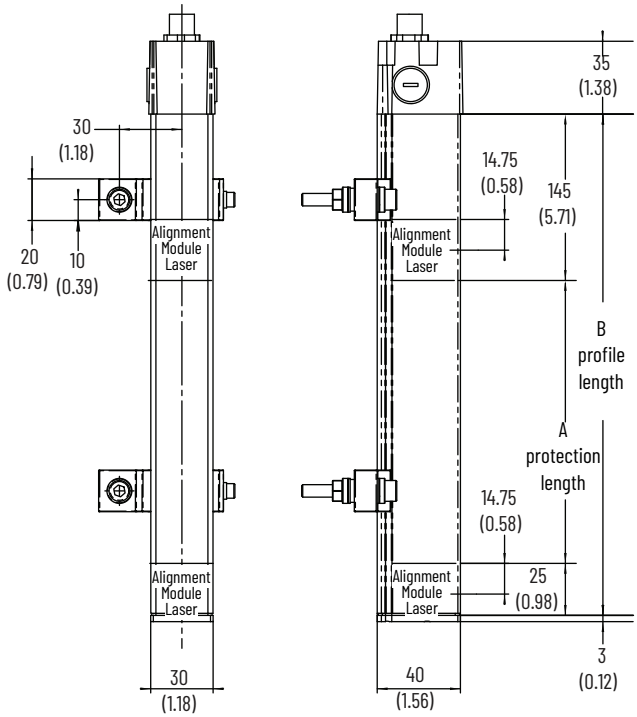

Cat. No.	A Protective Height [mm (in.)]	B Profile Length [mm (in.)]
445L-P2S0120YD	120 (4.7)	290 (11.4)
445L-P2S0240YD	240 (9.4)	410 (16.1)
445L-P2S0360YD	360 (14.2)	530 (20.9)
445L-P2S0480YD	480 (18.9)	650 (25.6)
445L-P2S0600YD	600 (23.6)	771 (30.4)
445L-P2S0720YD	720 (28.3)	891 (35.1)
45L-P2S0840YD	840 (33.1)	1011 (39.8)
445L-P2S0960YD	960 (37.8)	1131 (44.3)
445L-P2S1080YD	1080 (42.5)	1252 (49.3)
445L-P2S1200YD	1200 (47.2)	1372 (54.0)
445L-P2S1320YD	1320 (52)	1492 (58.7)
445L-P2S1440YD	1440 (56.7)	1612 (63.5)
445L-P2S1560YD	1560 (61.4)	1733 (68.2)
445L-P2S1680YD	1680 (66.1)	1853 (72.9)
445L-P2S1800YD	1800 (70.9)	1973 (77.6)
445L-P2S1920YD	1920 (75.6)	2093 (82.3)

Figure 17 - Safe 2 PAC (2- and 3-beam) [mm (in.)]

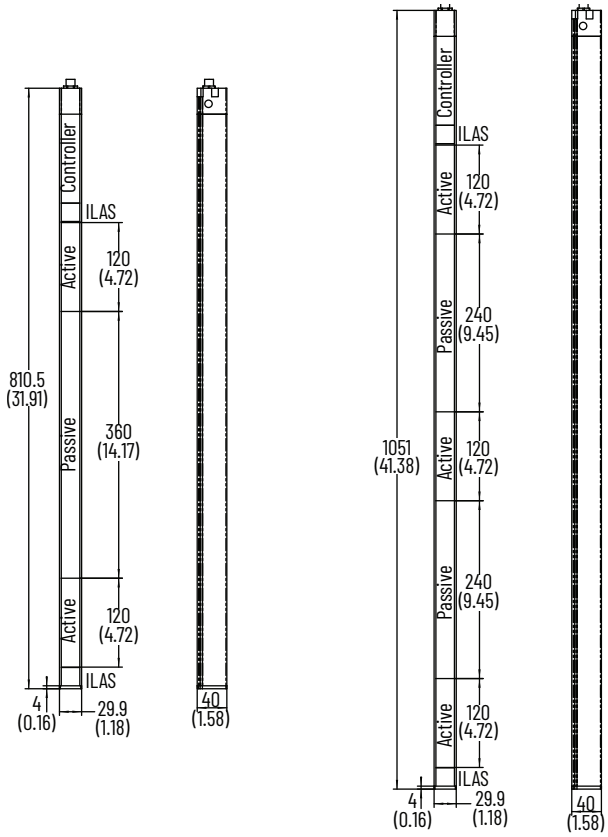

Table 13 - Transmitter and Receivers 5-pin M12 Cordsets

Concave (End)		Cable			Cat. No.
Face View	Connector Style	Pin/Wire Color	Wire Rating	Length [m (ft)]	
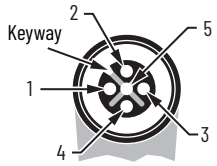	Straight concave non-shielded	1 Brown 2 White 3 Blue 4 Black 5 Gray	22 AWG 250V 4 A	2 (6.56)	889D-F5AC-2
				5 (16.4)	889D-F5AC-5
				10 (32.8)	889D-F5AC-10
				15 (49.2)	889D-F5AC-15
				20 (65.6)	889D-F5AC-20
				30 (98.4)	889D-F5AC-30
	Straight concave shielded	1 Brown 2 White 3 Blue 4 Black 5 Gray	22 AWG 300V 4 A	2 (6.56)	889D-F5EC-2
				5 (16.4)	889D-F5EC-5
				10 (32.8)	889D-F5EC-10
				15 (49.2)	889D-F5EC-15
				20 (65.6)	889D-F5EC-20
				30 (98.4)	889D-F5EC-30

Required Logic Interfaces

Description	Safety Outputs	Auxiliary Outputs	Terminals	Reset Type	Power Supply	Cat. No.
Single-function Safety Relays for 2 N.C. Contact Switch						
MSR127RP	3 N.O.	1 N.C.	Removable (screw)	Monitored manual	24V AC/DC	440R-N23135
MSR127TP	3 N.O.	1 N.C.	Removable (screw)	Auto/manual	24V AC/DC	440R-N23132
MSR126	2 N.O.	None	Fixed	Auto/manual	24V AC/DC	440R-N23117
Modular Safety Relays						
MSR210P base 2 N.C. only	2 N.O.	1 N.C. and 2 PNP solid-state	Removable	Auto/manual or monitored manual	24V DC from the base unit	440R-H23176
MSR220P input module	–	–	Removable	–	24V DC	440R-H23178
MSR310P base	MSR300 series output modules	3 PNP solid-state	Removable	Auto/manual/monitored manual	24V DC	440R-W23219
MSR320P input module	–	2 PNP solid-state	Removable	–	24V DC from the base unit	440R-W23218
Muting Modules						
MSR22LM	2 N.O.	1 N.C.	Removable	Auto/manual	24V DC	440R-P23071
MSR42 (1)	2PNP	2 PNP, configurable	Removable	Auto/manual or manual monitored	24V DC	440R-P226AGS-NNR

(1) Also requires optical interface 445L-AF6150 for GuardShield Safe 2 safety light curtain configurations.

Optional Accessories

Description		Cat. No.
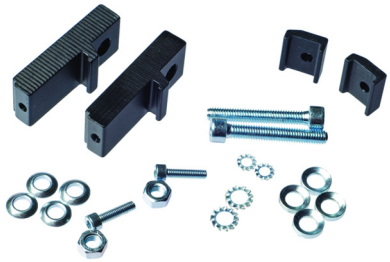	Side mounting kit (two kits required per pair)	445L-AF6140
	180° adjustable kit (two kits required per pair)	445L-AF6141
	Shock mount kit (two kits required per pair of safety light curtains)	445L-AF6142
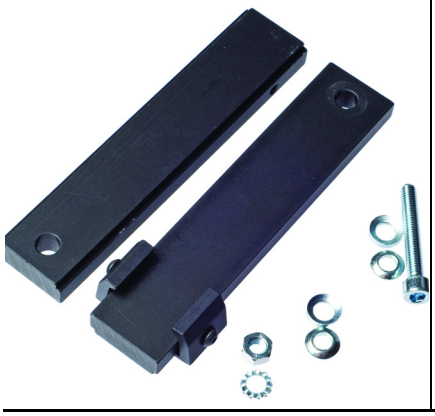	Vertical mounting kit (two kits required per pair)	445L-AF6144

Table 14 - Mirror 440L-AM075 [mm (in.)]

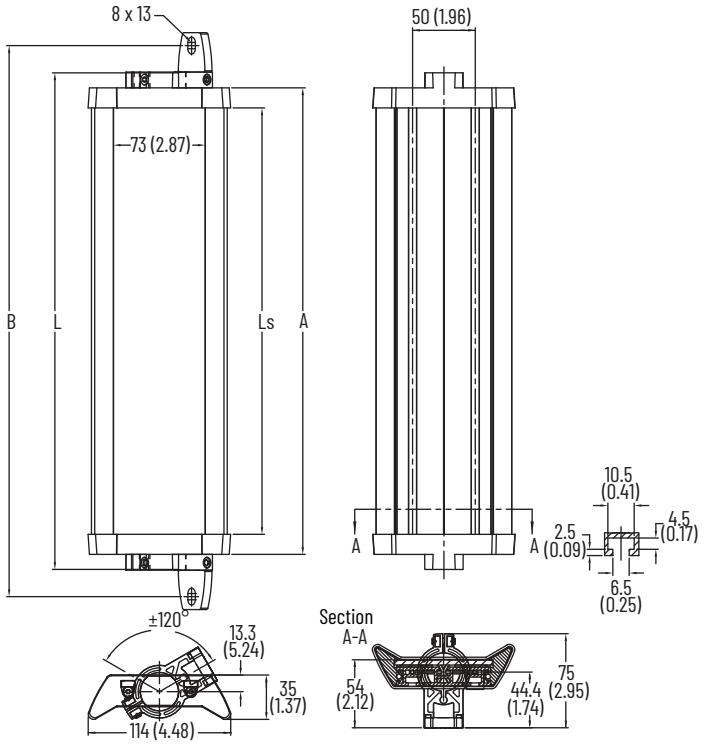

Cat. No.	Series	Description	L	L_S	A	B
440L-AM0750300	A	Mirror, 300 mm (11.81 in.), 4 m (13.12 ft)	396	340	372	440
440L-AM0750450	A	Mirror, 450 mm (17.72 in.), 4 m (13.12 ft)	546	490	522	590
440L-AM0750600	A	Mirror, 600 mm (23.62 in.), 4 m (13.12 ft)	696	640	672	740
440L-AM0750750	A	Mirror, 750 mm (29.53 in.), 4 m (13.12 ft)	846	790	822	890
440L-AM0750900	A	Mirror, 900 mm (35.43 in.), 4 m (13.12 ft)	996	940	972	1040
440L-AM0751050	A	Mirror, 1050 mm (35.43 in.), 4 m (13.12 ft)	1146	1090	1122	1190
440L-AM0751200	A	Mirror, 1200 mm (47.24 in.), 4 m (13.12 ft)	1296	1240	1272	1340
440L-AM0751350	A	Mirror, 1350 mm (53.15 in.), 4 m (13.12 ft)	1446	1390	1422	1490
440L-AM0751500	A	Mirror, 1500 mm (59.5 in.), 4 m (13.12 ft)	1596	1540	1572	1640
440L-AM0751650	A	Mirror, 1650 mm (64.96 in.), 4 m (13.12 ft)	1746	1690	1722	1790
440L-AM0751800	A	Mirror, 1800 mm (70.87 in.), 4 m (13.12 ft)	1896	1840	1872	1940

Table 15 - Mirror 440L-AM125 [mm (in.)]

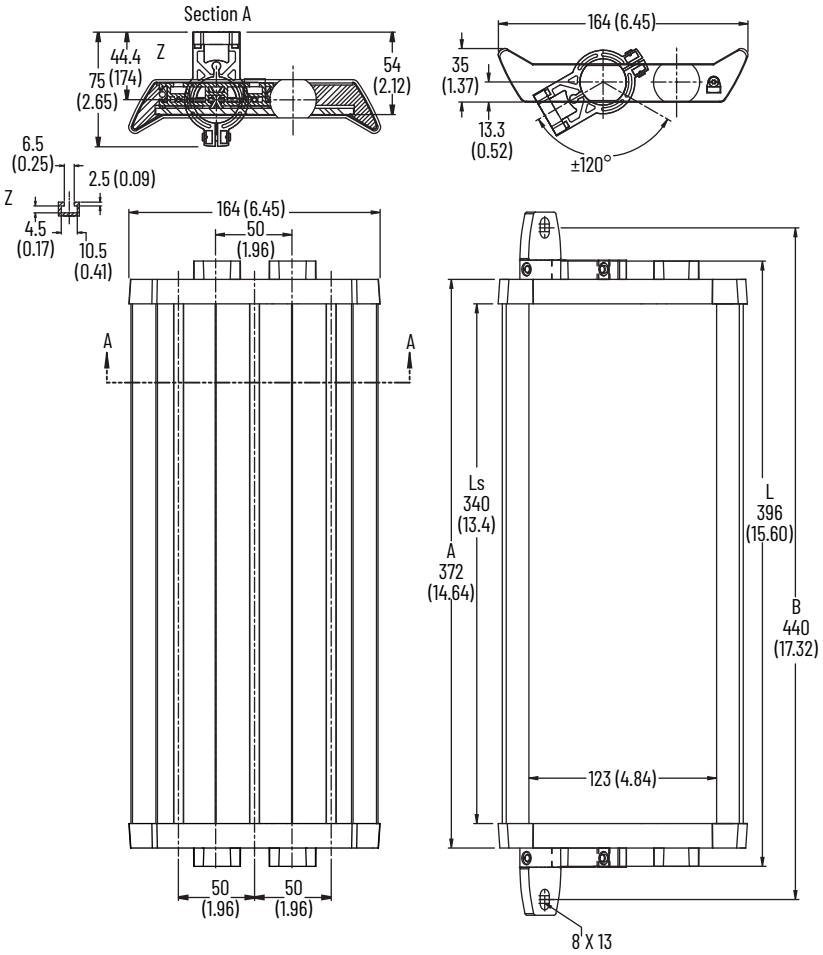

Cat. No.	Series	Description	L	L_S	A	B
440L-AM1250300	A	Mirror, 300 mm (11.81 in.), 15 m (49.21 ft)	396	340	372	440
440L-AM1250450	A	Mirror, 450 mm (17.72 in.), 15 m (49.21 ft)	546	490	522	590
440L-AM1250600	A	Mirror, 600 mm (23.62 in.), 15 m (49.21 ft)	696	640	672	740
440L-AM1250750	A	Mirror, 750 mm (29.53 in.), 15 m (49.21 ft)	846	790	822	890
440L-AM1250900	A	Mirror, 900 mm (35.43 in.), 15 m (49.21 ft)	996	940	972	1040
440L-AM1251050	A	Mirror, 1050 mm (35.43 in.), 15 m (49.21 ft)	1146	1090	1122	1190
440L-AM1251200	A	Mirror, 1200 mm (47.24 in.), 15 m (49.21 ft)	1296	1240	1272	1340
440L-AM1251350	A	Mirror, 1350 mm (53.15 in.), 15 m (49.21 ft)	1446	1390	1422	1490
440L-AM1251500	A	Mirror, 1500 mm (59.5 in.), 15 m (49.21 ft)	1596	1540	1572	1640
440L-AM1251650	A	Mirror, 1650 mm (64.96 in.), 15 m (49.21 ft)	1746	1690	1722	1790
440L-AM1251800	A	Mirror, 1800 mm (70.87 in.), 15 m (49.21 ft)	1896	1840	1872	1940

Corner Mirror for Multi-sided Guarding

Specially constructed glass mirrors for two- and three-sided safeguard applications.

Each mirror reduces the maximum scan range by 10% per mirror. Each corner mirror that is supplied with two end-cap mounting brackets.

GuardShield Safe 2 Safety Light Curtain Light Protected Height [mm (in.)]	Narrow Mirror Short-range 0...4 m (0...13.12 ft)	Mirror Height [mm (in.)]	Cat. No.	Wide Mirror Long-range 4...15 m (0...49.21 ft)	Mirror Height [mm (in.)]	Cat. No.
120/240 (4.7/9.4)		300 (11.8)	440L-AM0750300		300 (11.8)	440L-AM1250300
360 (14.2)		450 (17.7)	440L-AM0750450		450 (17.7)	440L-AM1250450
480 (19)		600 (23.6)	440L-AM0750600		600 (23.6)	440L-AM1250600
600 (24)		750 (29.5)	440L-AM0750750		750 (29.5)	440L-AM1250750
720/840 (28/33)		900 (35.4)	440L-AM0750900		900 (35.4)	440L-AM1250900
960 (38)		1050 (41.3)	440L-AM0751050		1050 (41.3)	440L-AM1251050
1080 (43)		1200 (47.2)	440L-AM0751200		1200 (47.2)	440L-AM1251200
1200 (47)		1350 (53.1)	440L-AM0751350		1350 (53.1)	440L-AM1251350
1320/1440 (52/57)		1500 (59.1)	440L-AM0751500		1500 (59.1)	440L-AM1251500
1560 (61)		1650 (65)	440L-AM0751650		1650 (65)	440L-AM1251650
1680 (66)		1800 (70.9)	440L-AM0751800		1800 (70.9)	440L-AM1251800
1800/1920		-	-		-	-

Mounting Stand

440L-AMSTD [mm (in.)]

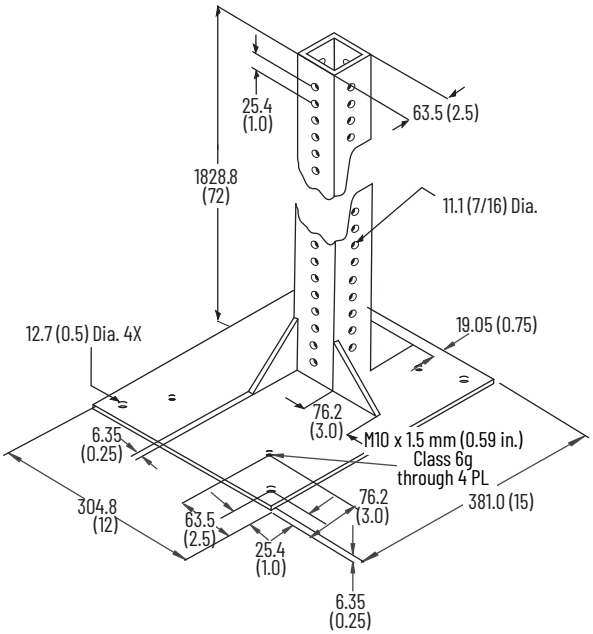

445L-AMSTD2M [mm (in.)]

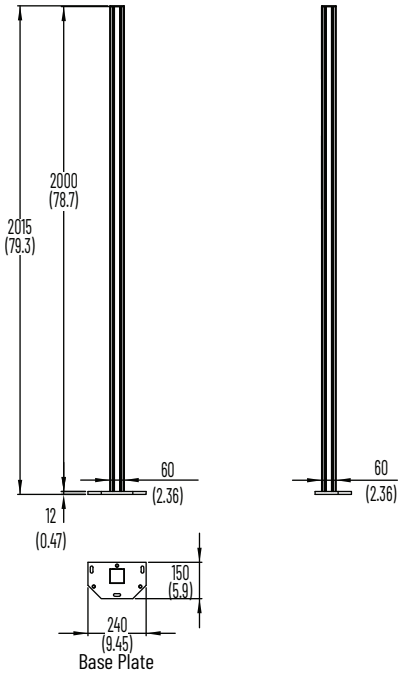

Certification and Compliance

Certification

See the Product Certification link at rok.auto/certifications for Declaration of Conformity, Certificates, and other certification details.

- CE Marked for all applicable directives (see Declaration of Conformity)
- UKCA marked for all applicable directives (see Declaration of Conformity)
- RCM marked (Australia)
- TÜV Rheinland-certified

Declaration of Conformity

CE Conformity

Rockwell Automation declares that the products that are shown in this document conform with the 2014/30/EU Electromagnetic Compatibility Directive (EMC) and 2006/42/EC Machinery (MD) and that the respective standards and/or technical specifications have been applied.

For a comprehensive CE certificate visit: rok.auto/certifications.

UKCA Conformity

Rockwell Automation declares that the products that are shown in this document are in compliance with 2016 No. 1091 Electromagnetic Compatibility Regulations and 2008 No. 1597 Supply of Machinery (Safety) Regulations and that the respective standards and/or technical specifications have been applied.

For a comprehensive UKCA certificate visit: rok.auto/certifications.

Notes:

Numerics

R

S

T

U

W

Notes:

Rockwell Automation Support

Use these resources to access support information.

Technical Support Center	Find help with how-to videos, FAQs, chat, user forums, Knowledgebase, and product notification updates.	rok.auto/support
Local Technical Support Phone Numbers	Locate the telephone number for your country.	rok.auto/phonesupport
Technical Documentation Center	Quickly access and download technical specifications, installation instructions, and user manuals.	rok.auto/techdocs
Literature Library	Find installation instructions, manuals, brochures, and technical data publications.	rok.auto/literature
Product Compatibility and Download Center (PCDC)	Download firmware, associated files (such as AOP, EDS, and DTM), and access product release notes.	rok.auto/pcdc

Documentation Feedback

Your comments help us serve your documentation needs better. If you have any suggestions on how to improve our content, complete the form at rok.auto/docfeedback.

Waste Electrical and Electronic Equipment (WEEE)

At the end of life, this equipment should be collected separately from any unsorted municipal waste.

Rockwell Automation maintains current product environmental compliance information on its website at rok.auto/pec.

Rockwell Otomasyon Ticaret A.Ş. Kar Plaza İş Merkezi E Blok Kat:6 34752, İçerenköy, İstanbul, Tel: +90 (216) 5698400 EEE Yönetmeliğine Uygundur

Connect with us.

rockwellautomation.com — expanding **human possibility**®

AMERICAS: Rockwell Automation, 1201 South Second Street, Milwaukee, WI 53204-2496 USA, Tel: (1) 414.382.2000, Fax: (1) 414.382.4444
EUROPE/MIDDLE EAST/AFRICA: Rockwell Automation NV, Pegasus Park, De Kleetlaan 12a, 1831 Diegem, Belgium, Tel: (32) 2 663 0600, Fax: (32) 2 663 0640
ASIA PACIFIC: Rockwell Automation, Level 14, Core F, Cyberport 3, 100 Cyberport Road, Hong Kong, Tel: (852) 2887 4788, Fax: (852) 2508 1846
UNITED KINGDOM: Rockwell Automation Ltd. Pitfield, Kiln Farm Milton Keynes, MK11 3DR, United Kingdom, Tel: (44)(1908) 838-800, Fax: (44)(1908) 261-917

10000169325 Ver 02
Publication 445L-UM002B-EN-P - November 2022
CSA: 108758
Supersedes Publication 445L-UM002A-EN-P - March 2016