ALLEN-BRADLEY

Data Highway/Data Highway Plus Communication Adapter Module

(Cat. No. 1785-KA)

User's Manual

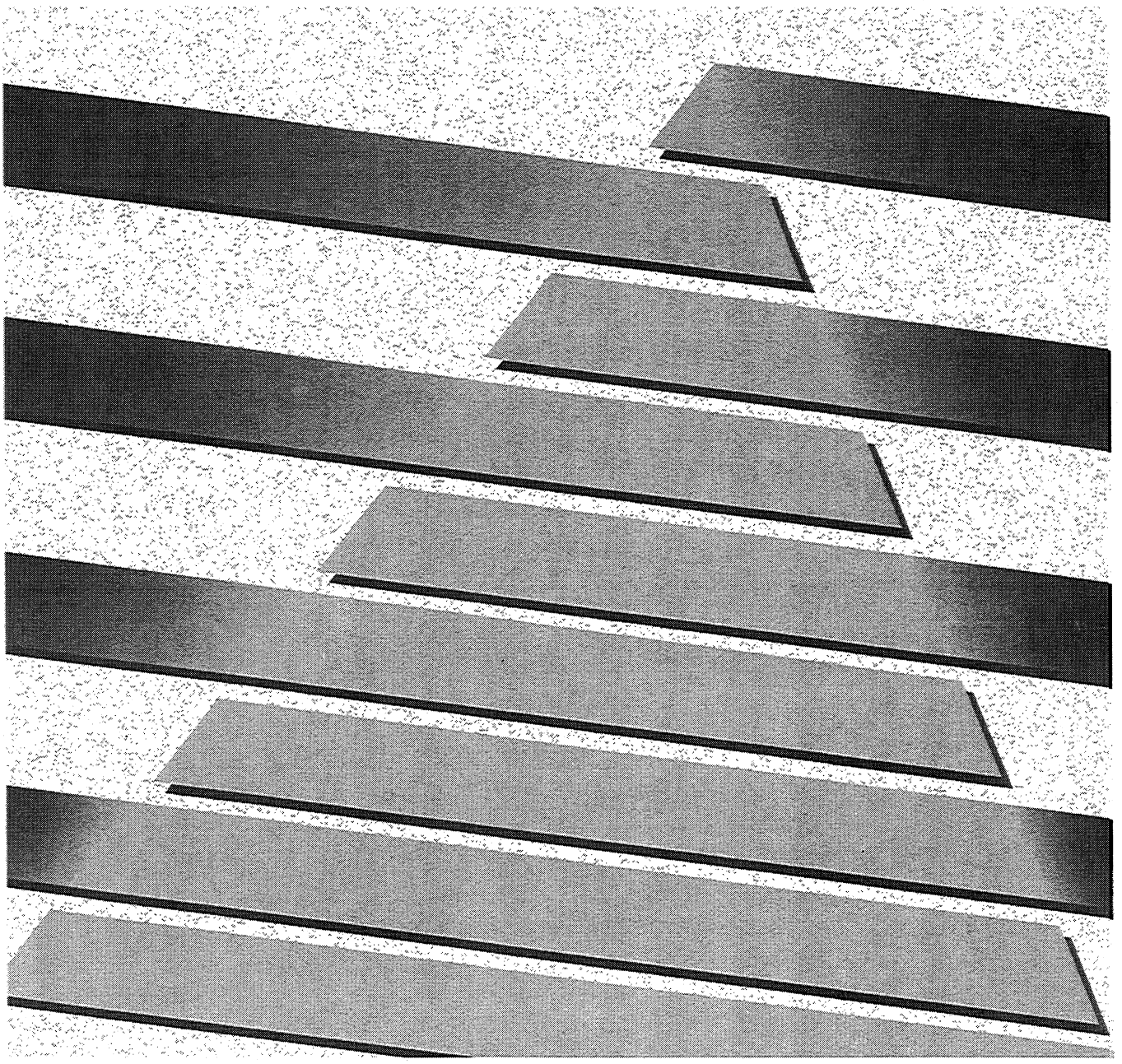

Important User Information

Because of the variety of uses for this equipment and because of the differences between this solid state equipment and electromechanical equipment, the user of and those responsible for applying this equipment must satisfy themselves as to the acceptability of each application and use of the equipment. In no event will Allen-Bradley Company, Inc. be responsible or liable for indirect or consequential damages resulting from the use or application of this equipment.

The illustrations, charts, and layout examples shown in this manual are intended solely to illustrate the text of this manual. Because of the many variables and requirements associated with any particular installation, Allen-Bradley Company, Inc. cannot assume responsibility or liability for actual use based upon the illustrative uses and applications.

No patent liability is assumed by Allen-Bradley Company, Inc. with respect to use of information, circuits, equipment or software described in this text.

Reproduction of the contents of this manual, in whole or in part, without written permission of the Allen-Bradley Company, Inc. is prohibited.

© 1988 Allen-Bradley Company, Inc.

PLC is a registered trademark of Allen-Bradley Company, Inc.

Table of Contents

Chapter/ Appendix:	Title:	Page:
1	**Using This Manual**	
	Chapter Objectives	1-1
	Purpose of This Manual	1-1
	Who Should Read This Manual	1-1
	What This Manual Contains	1-2
	Precautionary Notes	1-3
	Frequently Used Terms	1-3
	Related Products	1-4
	Related Publications	1-5
	In the Next Chapter	1-6
2	**Overview of the 1785-KA Module**	
	Chapter Objectives	2-1
	What is the 1785-KA Module?	2-1
	What are the Data Highway and Data Highway Plus Networks?	2-2
	Data Highway	2-4
	Data Highway Plus	2-4
	In the Next Chapter	2-4
3	**Installing the 1785-KA Module**	
	Chapter Objectives	3-1
	Setting the Communication Option Switches	3-1
	Switch Assembly SW-1: Network Link Communication Rate	3-2
	Switch Assemblies SW-2 and SW-3: For Future Use	3-3
	Switch Assemblies SW-4, SW-5, and SW-6: Data Highway and Data Highway Plus Node Addresses	3-3
	Mounting the 1785-KA Module	3-6
	Making Connections to the 1785-KA Module	3-7
	Powering Up the 1785-KA Module	3-9
	In the Next Chapter	3-9

Chapter/ Appendix: | Title: | Page:

4 Communicating Through the 1785-KA Module

Chapter Objectives..... 4-1
Communicating From Data Highway to Data Highway Plus..... 4-1
Communicating From a PLC-2 on Data Highway to a PLC-5 on Data Highway Plus..... 4-2
  How to Address a PLC-5 From a PLC-2..... 4-3
Communicating From a PLC-3 on Data Highway to a PLC-5 on Data Highway Plus..... 4-5
  Addressing a PLC-5 From a PLC-3..... 4-6
Communicating From a Computer on Data Highway to a PLC-5 on Data Highway Plus..... 4-7
Communicating From Data Highway Plus to Data Highway..... 4-9
  How to use the PLC-5 Message Instruction..... 4-10
  Monitoring and Modifying the Message Instruction.... 4-12
In the Next Chapter..... 4-13

5 1785-KA LED Indicators and Diagnostic Counters

Chapter Objectives..... 5-1
Using the LED Indicators..... 5-1
How to Use The 1785-KA Diagnostic Counters..... 5-3
  What is a Diagnostic Counter?..... 5-3
  How to Read Diagnostic Counters..... 5-4
1785-KA Diagnostic Counters..... 5-5
  Data Highway Diagnostic Counters..... 5-5
  Data Highway Plus Diagnostic Counters..... 5-6
In the Following Appendices..... 5-6

A Specifications

B Examples of Communicating Between Data Highway and Data Highway Plus

Chapter 1
Using This Manual

Chapter Objectives

After reading this chapter, you should know:

- o if this manual contains the information you need
- o where to locate information in this manual
- o where to locate information on related products

Purpose of This Manual

This manual describes the 1785-KA PLC-5 Data Highway/Data Highway Plus Communication Adapter Module. It gives you information for:

- o installing the 1785-KA
- o troubleshooting the 1785-KA

Who Should Read This Manual

You should read this manual before attempting to install or use the 1785-KA. We assume that you are already familiar with:

- o Allen-Bradley Programmable Logic Controllers (PLCs)

- o Allen-Bradley Data Highway and Data Highway Plus

What This Manual Contains

This manual contains five chapters and two appendices:

Chapter/ Appendix:	Title:	Contains:
1	Using This Manual	information you need to know for using this manual properly
2	Overview of the 1785-KA	conceptual information to help you understand the operation of the 1785-KA, Data Highway, and Data Highway Plus
3	Installing the 1785-KA Module	procedures for: o setting switches o mounting the module o connecting the module to Data Highway Plus o connecting the module to Data Highway o powering up the module
4	Communicating Through the 1785-KA Module	guidelines for using your 1785-KA to communicate between nodes on your Data Highway Plus and Data Highway networks.
5	1785-KA LED Indicators and Diagnostic Counters	descriptions of the 1785-KA LEDs and diagnostic counters
A	Specifications	1785-KA specifications
B	Examples of Communicating Between Data Highway and Data Highway Plus	examples of how to communicate between Data Highway and Data Highway Plus using the 1785-KA

Precautionary Notes

In this manual, you will see:

- **warnings** that indicate where you may be injured if you do not follow procedures properly
- **cautions** that indicate where equipment may be damaged if you do not follow procedures properly
- **important** notes that stress information that is critical to your understanding and use of the product

Frequently Used Terms

In this manual, we use the following terms:

This Term:	Means:
Data Highway Plus	formerly the Peer Communications Link (PCL)
DH	Data Highway
DH+	Data Highway Plus
node	interface point at which devices, such as programmable controllers, connect to the network. Usually, the node is an interface module, except for the PLC-5 and T50 terminal which connect directly to Data Highway Plus. In some Allen-Bradley documentation, you may find the term **station** used in place of the term **node**.
PLC	Programmable Logic Controller; generic term for any of Allen-Bradley's PLC product lines (such as PLC-2, PLC-3, etc...)

Related Products

Allen-Bradley offers a wide range of interfaces and software for Data Highway and Data Highway Plus networks, including:

Product:	Catalog Number:
Data Highway Communication Adapter Module	1771-KA2
Data Highway Interface Module for PROVOX Instrumentation System	1771-KX1
Data Highway Communication Controller Module	1771-KE,-KF
Data Highway PLC-4 Communication Interface	1773-KAA,-KAB
Data Highway PLC-3 Communication Adapter Module	1775-KA
PLC-3 Family I/O Scanner Communication Adapter Module	1775-S5,-SR5
Data Highway Plus Communication Interface Module	1785-KE
Data Highway/Data Highway Plus Communication Interface Module	1770-KF2
PLC-5 Programming Software	6200-PLC5
Industrial Terminal System	1784-T50
6001-NET Data Highway Communications Software	Series 6001
Data Highway Diagnostic Software	6001-F3E

Related Publications

For more information on Data Highway and Data Highway Plus networks, refer to:

Publication:	Publication Number:
Data Highway Cable Assembly and Installation Manual	1770-6.2.1
Data Highway/Data Highway Plus Protocol and Command Set Reference Manual	1770-6.5.16
Data Highway PLC-2 (1771-KA2) Communication Adapter Module User's Manual	1771-6.5.1
Data Highway/RS-232-C (1771-KE,-KF) Communication Controller Module User's Manual	1771-6.5.15
Data Highway PLC-4 (1773-KAA,-KAB) Communication Interface User's Manual	1773-6.5.2
Data Highway PLC-3 (1775-KA) Communication Adapter Module User's Manual	1775-6.5.1
PLC-3 Family I/O Scanner (1775-S5,-SR5) Communication Adapter Module	1775-6.5.5
Data Highway Plus/RS-232-C (1785-KE) Communication Interface Module User's Manual	1785-6.5.2
Data Highway/Data Highway Plus (1770-KF2) Communication Interface Module User's Manual	1770-6.5.13
PLC-5 Programming Software User's Manual	6200-6.5.5
Industrial Terminal System (T50) User's Manual	1784-6.5.1
6001-NET (VMS) Data Highway Communication Software User's Manual	6001-6.5.1
6001-NET (RSX-11) Data Highway Communication Software User's Manual	6001-6.5.2
Data Highway Diagnostic Software (6001-F3E) User's Manual	6001-6.5.3

The publications in the previous table are available from Allen-Bradley. Contact your local Allen-Bradley sales office for more information.

In the Next Chapter

In Chapter 2, we give you an overview of how to use the 1785-KA with Data Highway and Data Highway Plus.

Chapter 2
Overview of the 1785-KA Module

Chapter Objectives

In this chapter, we give you an overview of the 1785-KA module and how it interfaces with Data Highway and Data Highway Plus networks.

What is the 1785-KA Module?

The 1785-KA module is a communication adapter that connects a Data Highway Plus network (including PLC-5 family controllers) to nodes on an Allen-Bradley Data Highway.

Figure 2.1 shows the 1785-KA module's hardware features:

- diagnostic indicators
- connector for Data Highway Plus
- connector for the T50 Industrial Terminal
- connector for Data Highway

Figure 2.1
1785-KA Communication Interface Module

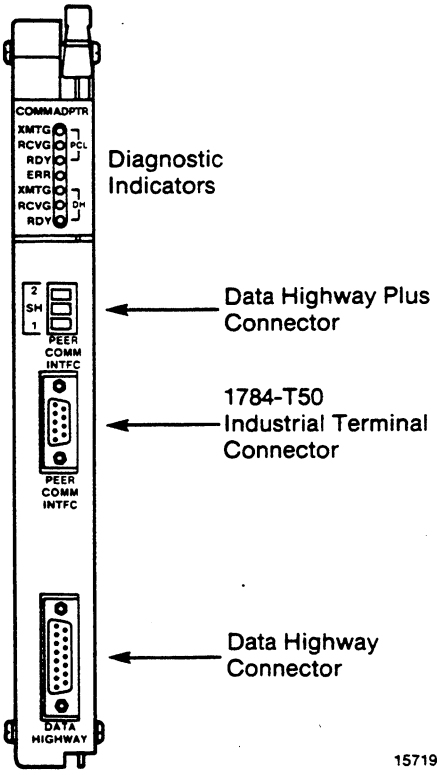

What are the Data Highway and Data Highway Plus Networks?

Data Highway and Data Highway Plus are local area networks (LANs) that allow peer-to-peer communication between devices such as:

- o PLCs
- o computers and other intelligent devices

Each network consists of a set of cables that provide a channel for communication between various devices.

The cables consist of a trunkline that can be up to 10,000 feet long and droplines that can be up to 100 feet each.

We refer to the point at which a device interfaces to the cable network as a **node**. In most cases, the node is an interface module (The PLC-5 has a Data Highway Plus connector built in, so it has no interface module).

If you need to add more nodes later, Data Highway and Data Highway Plus networks provide easy reconfiguration and expansion.

The 1785-KA is an active node on both networks. When initiating commands (messages), the module is transparent to nodes on Data Highway, but must be addressed on Data Highway Plus. For more information on using the 1785-KA, refer to Chapter 4.

Figure 2.2 shows a 1785-KA connecting a Data Highway Plus network to a Data Highway network.

Figure 2.2
The 1785-KA in a Typical Data Highway Plus/Data Highway Configuration

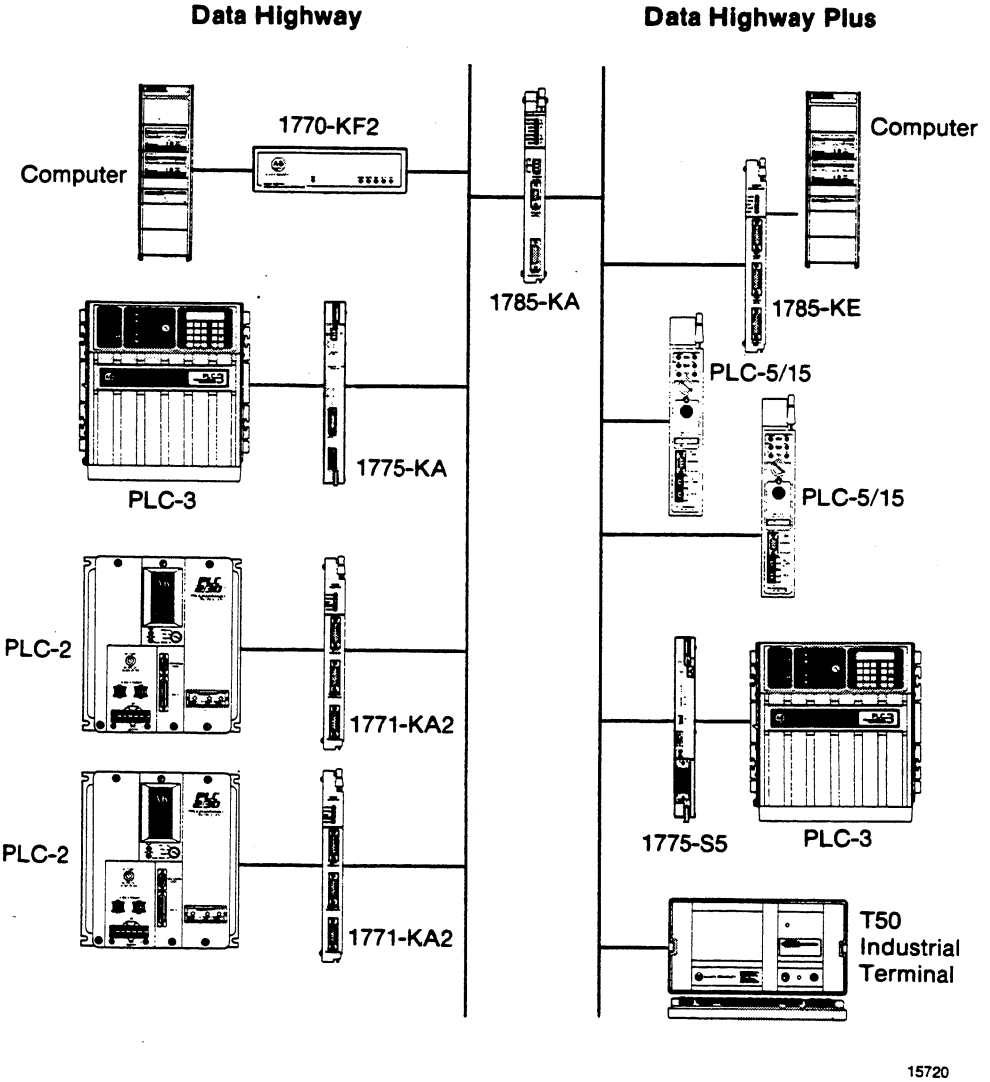

Important: A computer connected to a Data Highway Plus (through the 1785-KE or 1770-KF2 module) cannot access nodes on a Data Highway through a 1785-KA module. Also, nodes on Data Highway cannot access a computer connected to Data Highway Plus.

A 1784-T50 on a Data Highway Plus link cannot program PLCs on another Data Highway Plus link through the 1785-KA.

Data Highway

Data Highway connects up to 255 nodes and has a communication rate of 57,600 bits per second. Data Highway implements peer-to-peer communication through a modified token-passing scheme called the floating master. With this arrangement, each node has equal access to become master. The nodes bid for temporary mastership based on their need to send information. Data Highway uses timeouts to recover from a fault that disables the node that has the token.

Data Highway Plus

Data Highway Plus connects up to 64 nodes and has a communication rate of 57,600 bits per second. You use the Data Highway Plus when you want to connect a small number of nodes (including PLC-5s) on a common link.

The Data Highway Plus implements peer-to-peer communication with a token-passing scheme to rotate link mastership among its nodes. Data Highway Plus uses timeouts to recover from a fault that disables the node that has the token.

Important: Data Highway Plus optimizes performance for small links. A Data Highway Plus link of 16 nodes offers better performance than a comparable Data Highway link. If you plan on using more than sixteen nodes, however, a Data Highway network probably offers better system performance than a Data Highway Plus link.

In the Next Chapter

In the next chapter, we give guidelines and procedures for:

- setting the switches on the 1785-KA
- mounting the 1785-KA
- connecting the 1785-KA module to Data Highway Plus
- connecting the 1785-KA module to Data Highway
- connecting the T50 terminal to the 1785-KA
- powering up the 1785-KA

Chapter Objectives

This chapter explains how to install the 1785-KA module. There are five parts to installation:

- setting the communication option switches
- mounting the module
- connecting the module to Data Highway Plus
- connecting the module to Data Highway
- powering up your module

Read the first two chapters of this manual carefully before attempting to install the 1785-KA.

Setting the Communication Option Switches

The 1785-KA module has 6 switch assemblies (figure 3.1) that enable you to select various communication options. The switch assemblies and their corresponding options are:

Select this switch assembly:	For this communication option:
SW-1	network link communication rate
SW-2, SW-3	not used (switches must be set OFF)
SW-4, SW-5, SW-6	Data Highway/Data Highway Plus node address

Figure 3.1
Location of the Switch Assemblies on the 1785-KA

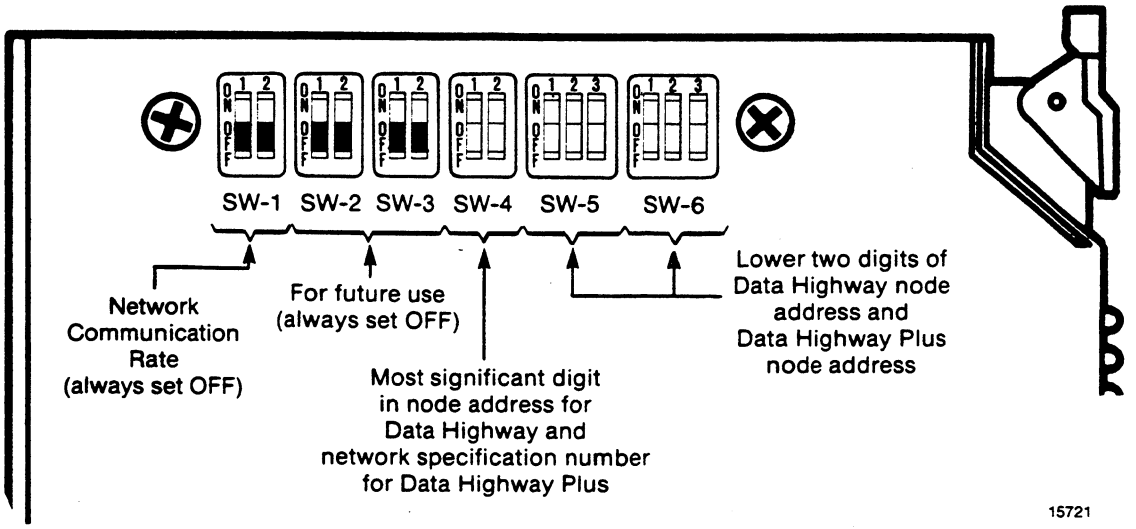

Switch Assembly SW-1: Network Link Communication Rate

Switch assembly SW-1 lets you select the communication rates for the Data Highway and Data Highway Plus ports on the 1785-KA module. Figure 3.2 shows the switches on SW-1.

Figure 3.2
The Switches on Switch Assembly SW-1

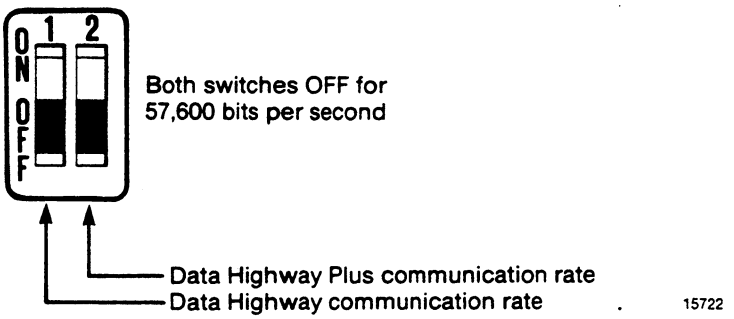

You must set both switches OFF for SW-1. This setting selects a communication rate of 57,600 bits per second on both Data Highway and the Data Highway Plus.

Switch Assemblies SW-2 and SW-3: For Future Use

Switch assemblies SW-2 and SW-3 are for future use. You must set both switches on switch assemblies SW-2 and SW-3 to OFF (figure 3.3).

Figure 3.3
Setting Switch Assemblies SW-2 and SW-3

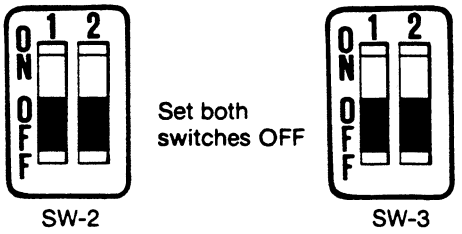

Switch Assemblies SW-4, SW-5, and SW-6: Data Highway and Data Highway Plus Node Addresses

You use switch assemblies SW-4, SW-5, and SW-6 to set the node address of the 1785-KA module on both the Data Highway and Data Highway Plus networks. Figure 3.4 shows switch assemblies SW-4, SW-5, and SW-6.

Figure 3.4
Switch Assemblies SW-4, SW-5, and SW-6

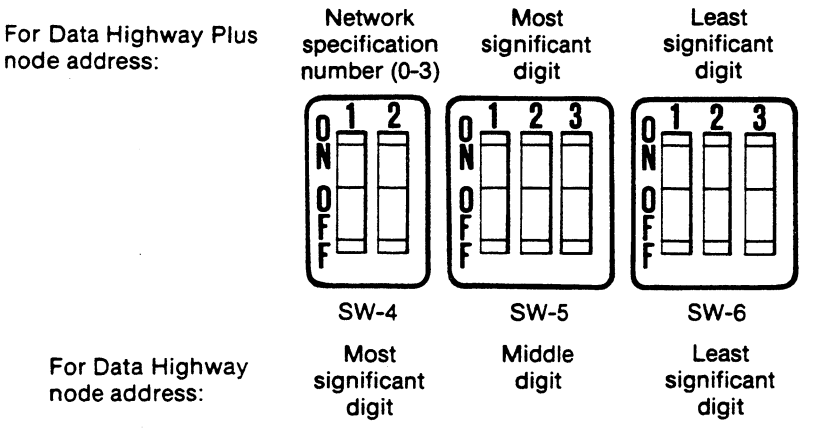

The node address that you set using switch assemblies SW-4, SW-5, and SW-6 must correspond to a valid and unique node address on both Data Highway and Data Highway Plus. Use the following procedure to properly set both the Data Highway and Data Highway Plus node address for the 1785-KA.

1.
Use switch assemblies SW-5 and SW-6 to set both the:

- 1785-KA Data Highway Plus node address (00 to 77 octal)
- lower two digits of the 1785-KA Data Highway number (000 to 376 octal)

For example, if you set SW-5 to 7 and SW-6 to 1, then:

- your Data Highway Plus address would be 71
- the lower two digits of your Data Highway address would be 71

2.
Use switch assembly SW-4 to set both the:

- most significant digit on the Data Highway address (000 to 376 octal)
- network specification number (0 - 3) of the Data Highway Plus network on the Data Highway (you can connect up to four Data Highway Plus networks to one Data Highway)

For example, if you set SW-4 to 2, then:

- your 1785-KA Data Highway Plus would have a network specification of 2
- your 1785-KA Data Highway address would have a most significant digit of 2

Each Data Highway Plus link (up to four) that you connect to a Data Highway network (through the 1785-KA) must have a unique network specification number.

For more information on how to use the network specification number, the Data Highway node address, and the Data Highway Plus node address to communicate between networks, refer to Chapter 4 and Appendix B of this manual.

Figure 3.5 shows an example of three 1785-KA modules attaching three Data Highway Plus networks to a Data Highway network.

Figure 3.5
An Example of Assigning Node Addresses

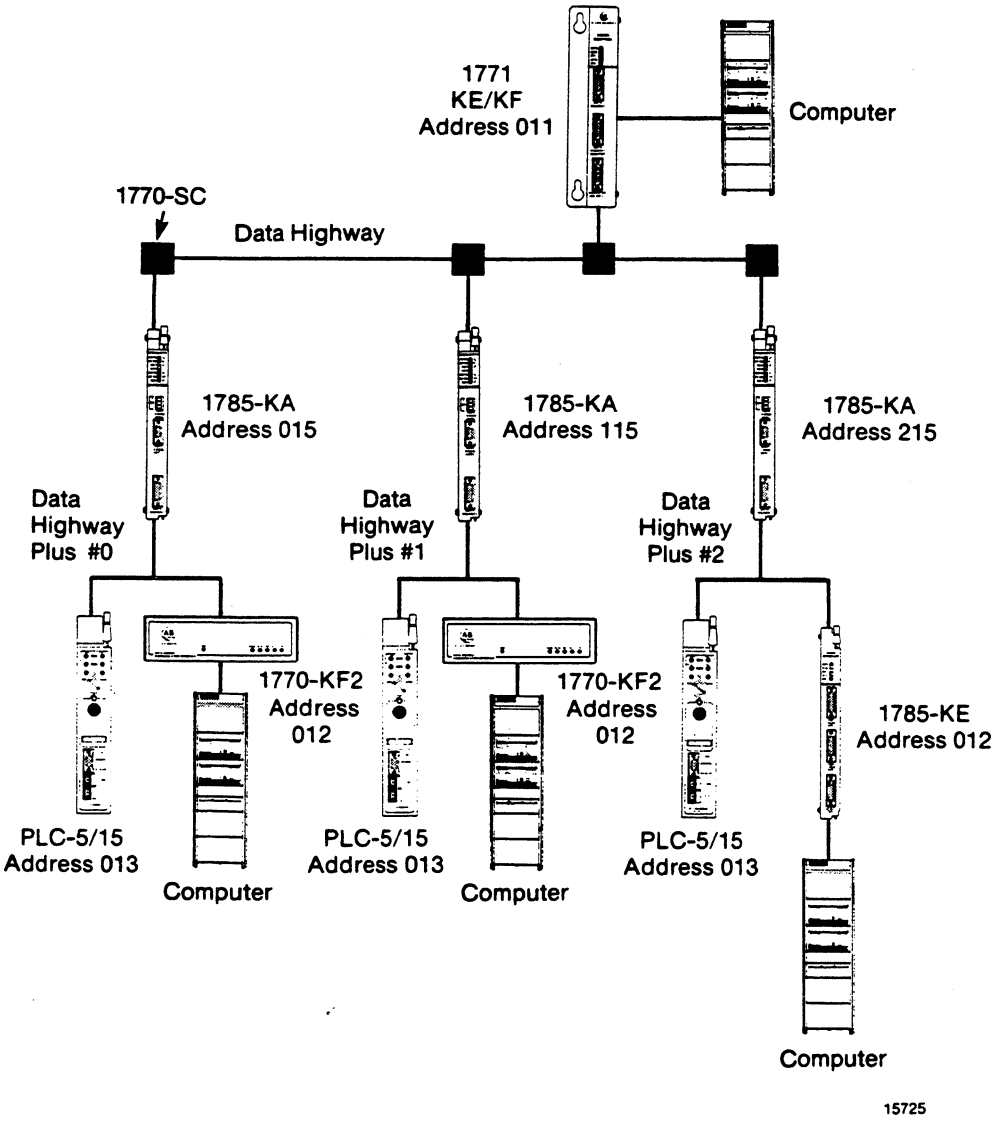

In our example, each 1785-KA has a Data Highway Plus address of 15.

The 1785-KA at Data Highway address:

- o 015 is connected to the Data Highway Plus network with a network specification of 0
- o 115 is connected to the Data Highway Plus network with a network specification of 1
- o 215 is connected to the Data Highway Plus network with a network specification of 2

Mounting the 1785-KA Module

The 1785-KA module mounts in an Allen-Bradley 1771 I/O rack. If you are using a dropline/trunkline configuration for Data Highway and Data Highway Plus, you must mount the 1785-KA module within 100 cable feet of both trunklines.

To install a 1785-KA module in a 1771 I/O rack, follow these steps:

1.
Perform a power down of the I/O rack and its controlling PLC. Refer to your PLC user's manual for more information.

WARNING: Remove system power before removing or installing your module in the 1771 I/O chassis. Failure to observe this warning could result in:

- damage to module circuitry
- undesired operations that may injure personnel

2.
Set the keying bands on the I/O rack slot. The 1785-KA is keyed to guard against installation in the wrong slot in your rack. To install your module in the rack, you must insert keying bands (provided with your 1771 I/O rack) on the backplane as shown below:

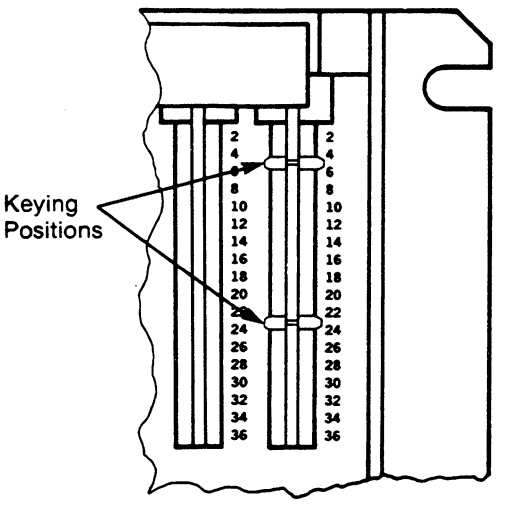

3.
Slide the 1785-KA module into one of the slots in the I/O rack. Snap down the latch on the top of the module slot to secure the module in place.

Making Connections to the 1785-KA Module

The 1785-KA module has three connectors on its front panel (figure 3.6).

Figure 3.6
The Connectors on the 1785-KA

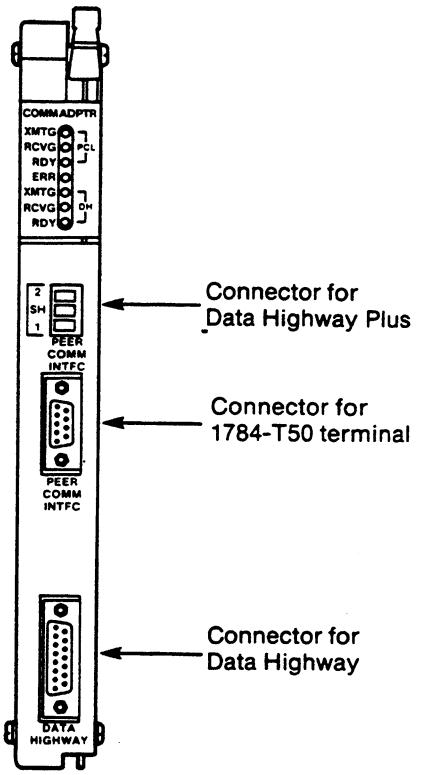

You use the top connector, labeled **PEER COMM INTFC**, to connect the 1785-KA to Data Highway Plus. Plug the 3-pin connector of your Data Highway Plus dropline into this connector. You must use a cable with pinouts as shown in figure 3.7.

Figure 3.7
Pinouts for Connecting Data Highway Plus to the 1785-KA

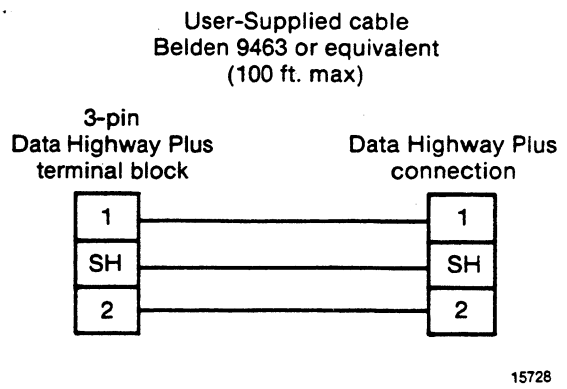

You can use the center connector, labeled **PEER COMM INTFC,** to connect your 1784-T50 terminal to the Data Highway Plus network. You must use a cable with the pinouts shown in figure 3.8.

Figure 3.8
Pinouts for Connecting the 1784-T50 to the 1785-KA

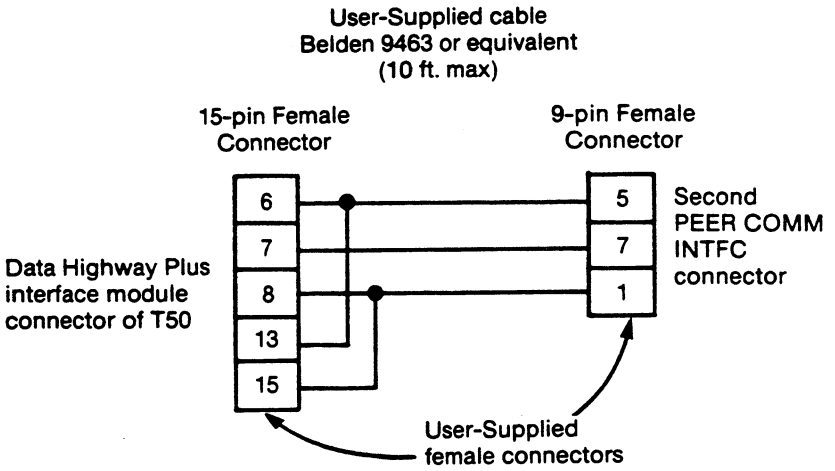

You use the bottom connector, labeled Data Highway, to connect the Data Highway dropline. You must use a cable with the pinouts shown in figure 3.9.

Figure 3.9
Pinouts for Connecting Data Highway to the 1785-KA

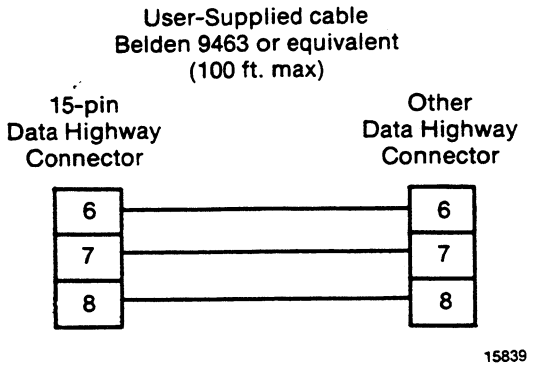

For instructions on how to construct cables, refer to the Data Highway Cable Assembly and Installation Manual (publication 1770-6.2.1).

Powering Up the 1785-KA Module

When you have successfully:

- set the switch assemblies on the 1785-KA
- mounted your 1785-KA module in a 1771 I/O rack
- connected your module to Data Highway Plus and to Data Highway (and, optionally, the 1784-T50 terminal)

you are ready to power up your 1785-KA module. To power up your module, perform a power up of the I/O rack and PLC (refer to your PLC user's manual for more information).

At power-up, all seven of the LEDs will light up momentarily, then, all but the top two LEDs will go out. The top two LEDs, XMTG and RCVG, will continue flashing (or flickering) due to the Data Highway Plus token passing routine.

For more information on the 1785-KA LED indicators, refer to Chapter 5.

In the Next Chapter

In the next chapter, we give you guidelines for communicating from:

- Data Highway to Data Highway Plus
- Data Highway Plus to Data Highway

Chapter Objectives

After reading this chapter, you should know how to initiate communications from:

- Data Highway nodes to Data Highway Plus nodes
- Data Highway Plus nodes to Data Highway nodes

Refer to Appendix B for examples on how to communicate between various types of PLCs and computers through the 1785-KA.

Communicating From Data Highway to Data Highway Plus

The 1785-KA module's operation is transparent to your Data Highway nodes. This means that commands sent to a Data Highway Plus node from a Data Highway node do not address the 1785-KA.

The 1785-KA examines the destination address of each command sent on the Data Highway. Figure 4.1 shows a sample address sent to a Data Highway Plus node:

Figure 4.1
An Example of a Destination Address From a Data Highway Node to a Data Highway Plus Node

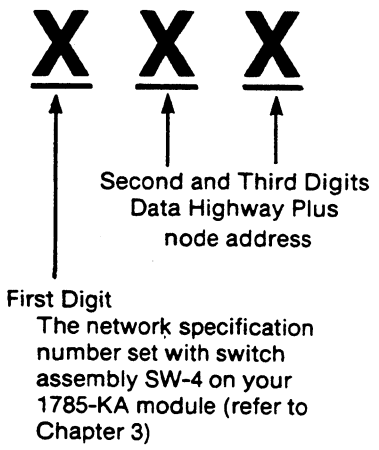

Upon receiving a command, the module examines the most significant digit of a command's destination address. Since a Data Highway Plus node can only have a two digit address, the most significant digit is used as the network specification number.

If the most significant digit in a command's destination address matches the setting of the network specification number, the 1785-KA then determines if the lower two digits of the command's destination address match a node address contained in the 1785-KA Data Highway Plus active node table.

If the lower two digits of the destination address match an address on the Data Highway Plus network, the command is sent to the appropriate Data Highway Plus node. A reply is returned, through the 1785-KA, to the Data Highway node that sent the command.

If the network specification number in the message does not match the network number of your Data Highway Plus network (set at the 1785-KA), the command is ignored by the 1785-KA. If the network number matches, but the lower two digits of the destination address do not match an address on the Data Highway Plus network, the command is also ignored.

Important: Do not give a Data Highway node the same address as a Data Highway Plus node. Otherwise, you may unexpectantly send information to the wrong node.

For example, a Data Highway Plus with node number 20 on Data Highway Plus network number 2 has the same address (to a Data Highway node) as a Data Highway node with the address 220. In this situation, a message sent to destination 220 would go to Data Highway node 220 and Data Highway Plus node 20 on Data Highway Plus network 2.

Communicating from a PLC-2 on Data Highway to a PLC-5 on Data Highway Plus

You initiate messages from a PLC-2 using ladder logic programming. This involves programming a communication zone and a rung to control command start bits. Refer to the appropriate PLC-2 Family user's manual and the PLC-2 Communication Adapter (1771-KA2) User's Manual (publication 1771-6.5.1).

If you set the network specification number of the Data Highway Plus network to 0 or 1, the PLC-2 on Data Highway can communicate with Data Highway Plus addresses 010 to 077 (octal) but not with addresses 00 to 07 (octal). This is because the PLC-2 reserves addresses 000 to 007 (octal) and 100 to 107 (octal) for PLC-2 work areas. These areas cannot be entered by a 1770-T3 Industrial Terminal during programming.

If you set the network specification number of the Data Highway Plus network to 2, the PLC-2 on Data Highway can communicate with all Data Highway Plus addresses (00 to 77 octal).

If you set the network specification number of the Data Highway Plus network to 3, the PLC-2 on Data Highway can communicate with Data Highway Plus addresses 00 to 76 (octal) but not with address 77. This is because address 377 is an illegal node address on Data Highway.

The following sections contain addressing guidelines for you to consider when communicating from a PLC-2 on Data Highway to a PLC-5 on Data Highway Plus.

How to Address a PLC-5 From a PLC-2

The PLC-2 does not understand the file structure of the PLC-5. When a PLC-2 sends a message (through a 1771-KA2) to a PLC-5, the data is either read from or written to a default file in the PLC-5. This default file is the file number that corresponds to the decimal equivalent of the 1771-KA2's octal node address. For example, a 1771-KA2 with a node address of 012 (octal) will read data from and write data to file number 10 (012 octal = 10 decimal) in each of the PLC-5s on Data Highway Plus.

The file type of this file is not pre-defined, but the file must look like a PLC-2 data table to the PLC-2.

The following table shows the octal addresses, their decimal equivalents, and the PLC-5 reserved files. The first 9 files (0 - 8) are reserved for the data type listed.

Octal:	Decimal Equivalent:	PLC-5 Reserved File/File Type:
000	0	output file
001	1	input file
002	2	status file
003	3	bit file
004	4	timer file
005	5	counter file
006	6	control file
007	7	integer file
010	8	floating point file
011 to 376	9 to 255 (a PLC-5 may have a file number up to 999)	user defined files

Make sure that:

- if you use a Data Highway module with a node address of 000 to 010 (octal) to communicate with a PLC-5 using PLC-2 commands, the module must be able to properly communicate to the corresponding file type listed in the previous table
- the file in the PLC-5 is created and is large enough to handle the command
- you specify the address of the destination PLC-5 the same way that you would specify the address of another PLC-2

The PLC-5's address is specified in the command rung of the PLC-2's command code specifications:

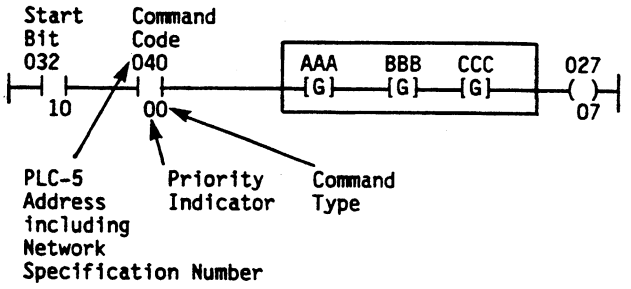

AAA - beginning word address (in octal) of the remote node processor for read/write operation.
BBB - beginning word address (in octal) of the local node processor for read/write operation.
CCC - Ending word address (in octal) of the local node processor for read/write operation.

15731-A

Series A versions of the PLC-5 will return an error if a priority command is sent from a Data Highway node to a Data Highway Plus node.

Refer to Appendix B of this manual for:

- a diagram of a typical Data Highway and Data Highway Plus network using 1785-KA modules
- examples on how to read data from and write data to a PLC-5 using a PLC-2

Communicating from a PLC-3 on Data Highway to a PLC-5 on Data Highway Plus

You can communicate from a PLC-3 to a PLC-5 as if the PLC-5 were a:

- PLC-2
- PLC-3

Refer to the previous section in this chapter for information on how to communicate to a PLC-5 as if it were a PLC-2. When you use a PLC-3 to communicate with a PLC-2, you must specify a PLC-2 type address in the remote address portion of the PLC-3 message instruction.

You initiate a PLC-3 message from a PLC-3 using ladder programming. This involves programming a PLC-3 message instruction and a rung to control the initiation of the message. For specific programming techniques and examples, refer to your PLC-3 programming manual and the Data Highway/PLC-3 Communication Adapter (1775-KA) User's Manual (publication 1775-6.5.1).

Addressing a PLC-5 From a PLC-3

When sending a command to a PLC-5 from a PLC-3, use the following guidelines to program the message instruction.

The PLC-3 has six levels of addressing while the PLC-5 has only four levels. Therefore, if a PLC-5 received a full PLC-3 six-level address, it would return an error code. The following table summarizes the addressing levels of the PLC-3 and PLC-5.

Address Level:	PLC-3 Family:	PLC-5 Family:
1	Major Section (3 = data table)	Major Section (0 = data table)
2	Context	File Number (must be 1 - 15)
3	Section	Element
4	File	Sub-Element
5	Structure	--
6	Word	--

To communicate from the PLC-3 to the PLC-5, you must enter the PLC-5 address in the following format:

$ E [Major Section].[File #].[Element].[Sub-Element]

A command of this format can be accepted by the PLC-5 because the address has only 4 levels.

Make sure that:

- o the PLC-5 file you will communicate with is created and large enough to handle the command
- o you specify the PLC-5 address in a message instruction as shown above. If you were to enter a PLC-5 address in normal PLC-3 address format ($N1:0), the 1775-KA would format a six level address. If the PLC-5 receives a six-level address, it will be unable to read it and will return an error.

The following example shows a PLC-3 message instruction with a PLC-5 address:

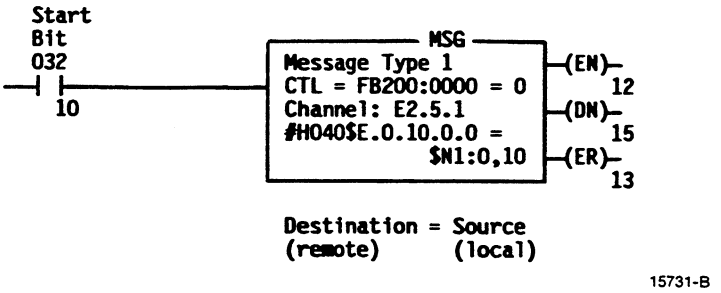

Refer to Appendix B for examples of how to:

- o read data from a PLC-5 to a PLC-3 using PLC-2 or PLC-3 commands
- o write data to a PLC-5 from a PLC-3 using PLC-2 or PLC-3 commands

Communicating from a Computer on Data Highway to a PLC-5 on Data Highway Plus

Any computer that can communicate on Data Highway can communicate with a PLC-5 on Data Highway Plus using the 1785-KA module. The table below gives a summary of PLC-5 data table areas based on the type of commands your computer sends.

The extent to which your computer can access PLC-5 data table areas depends on the addressing capabilities of the computer's software. Refer to the Data Highway/Data Highway Plus Protocol and Command Set Reference Manual (publication 1770-6.5.16) for information necessary to create a Data Highway or Data Highway Plus software driver for your computer.

If Your Computer Executes:	Then Your Computer Can Access Data From:
the Basic Command Set (CMD = 01,CMD = 08)	a single file in the PLC-5 data table. This file automatically defaults to the file number that is the decimal equivalent of the octal node address of the computer's interface module. For example, if the computer's octal node address is 20, the computer would read from and write to PLC-5 file 16 (20 octal = 16 decimal). You can change the default file to any file in a PLC-5 by issuing a **Modify PLC-2 Compatibility File** command.
PLC-5 Commands or PLC-3 Word Range Read or Write (CMD = 0F and FNC = 01, FNC = 00, etc.)	all files in the PLC-5 data table. The computer **must** have the capability to format the appropriate packet in logical ASCII or logical binary format. For more information, refer to the Data Highway/Data Highway Plus Protocol and Command Set Reference Manual (publication 1770-6.5.16)

Refer to Appendix B for examples of how to read from and write to a PLC-5 from:

- a computer using a PLC-2 command
- a computer using a PLC-3 command

Communicating From Data Highway Plus to Data Highway

A Data Highway Plus node sending a command to a Data Highway node must address the 1785-KA. The module accepts commands that are addressed to it and passes them onto Data Highway. Therefore, when communicating from Data Highway Plus to Data Highway, two addresses are required:

- **Local Node Address** -- the node address of the 1785-KA
- **Remote Node Address** -- the address of the node on the Data Highway

Because of these addressing considerations, you:

- **can** communicate from a PLC-5 on one Data Highway Plus, across a 1785-KA to another 1785-KA on Data Highway, to a PLC-5 on a second Data Highway Plus
- **cannot** communicate from a node on one Data Highway, across a 1785-KA to another 1785-KA on a Data Highway Plus, to a node on a second Data Highway
- **cannot** communicate from a computer on Data Highway Plus, across a 1785-KA, to a node on Data Highway

The PLC-5 uses a message (MSG) instruction to communicate with any Data Highway node.

The following sections contain information on how to use the PLC-5 message instruction to communicate with other nodes on Data Highway.

Refer to Appendix B for examples using a PLC-5 to read from and write to a:

- Data Highway node
- remote PLC-5 from a PLC-5

For more information on the PLC-5 message (MSG) instruction, refer to the PLC-5/15 Processor Manual (publication 1785-6.8.1).

How to Use the PLC-5 Message Instruction

To use the PLC-5 message instruction with a T-50 Industrial Computer (version 1.2 software or later), follow this procedure:

1.
Enter the control block address. This address is a variable length integer file (12 words for the PLC-2 and 15 words for the PLC-3 and PLC-5) that controls the instruction operation. Enter the address of the control block integer file without the "$" symbol.

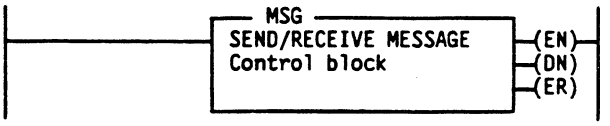

15731-C

2.
Press **DO**. The following display appears:

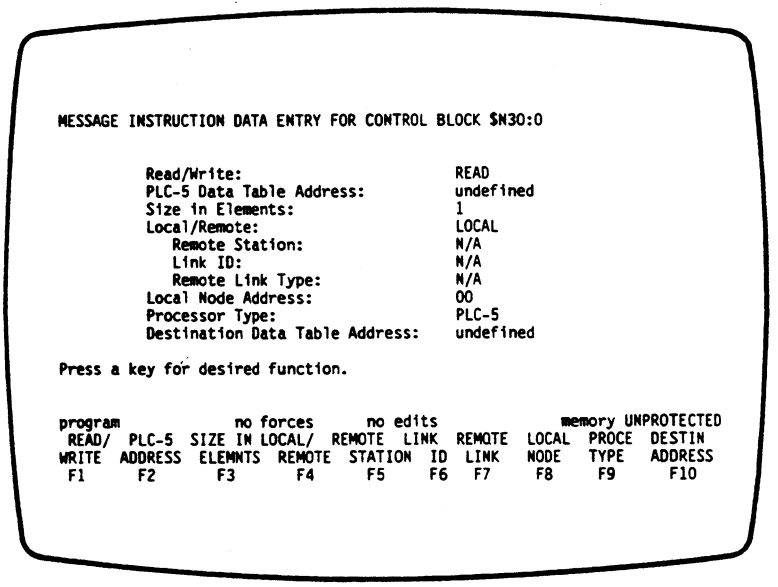

15732-A

3.
To enter information for the message instruction, refer to the following table:

Press This Key:	To:
[F1]	toggle between READ and WRITE
[F2]	enter the local data table address where data starts for the WRITE command or data is stored for the READ command
[F3]	enter the message size in elements
[F4]	toggle between LOCAL (on the Data Highway Plus) and REMOTE (through a 1785-KA). When REMOTE, F5 through F7 must be entered.
[F5]	enter the Data Highway address of the target PLC (used with the F4 REMOTE setting)
[F6]	enter the link ID (always enter zero "0") (used with F4 REMOTE setting)
[F7]	toggle to Data Highway (used with the F$ REMOTE setting)
[F8]	enter the local node address. If communication is with another PLC-5 on the Data Highway Plus, enter the PLC's Data Highway Plus address. If communication is through a 1785-KA, enter the address of the 1785-KA.
[F9]	toggle between PLC-2, PLC-3, and PLC-5 as the target PLC
[F10]	enter the target PLC's data table address

4.
Press **DO** after entering the above information. You are returned to the rung display.

5.
Press **DO** twice. The rung will be entered and you can continue editing ladder logic.

Monitoring and Modifying the Message Instruction

Use the following procedure to monitor and modify a PLC-5 message instruction:

1.
Make sure that the cursor is on the MSG instruction, then press [F8] - Data Monitor. The following display appears:

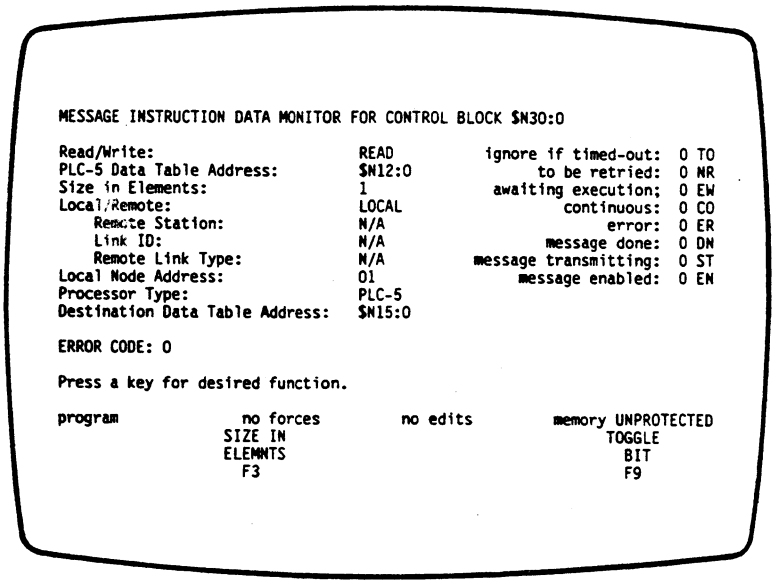

15732-B

The information that you entered for a message instruction appears in the left column. You can change the information in the right column (status and control bits) by cursoring to the desired line and pressing [F9]. This key toggles the bit between 0 and 1.

See the PLC-5/15 Processor Manual (publication 1785-6.8.1) for a detailed explanation of the status and control bits in the data monitor input screen.

You can also change the size of a message by pressing [F3] (size in elements) and entering a value.

2.
Press **DO** when finished. You are returned to the ladder diagram.

In the Next Chapter

In Chapter 5 we provide:

- a description of LED diagnostic indicators that are on the front panel of your 1785-KA module
- information on using the 1785-KA diagnostic counters

Chapter 5
1785-KA LED Indicators and Diagnostic Counters

Chapter Objectives

In this chapter, we provide:

- descriptions of the LED indicators on the front panel of the 1785-KA
- a list of 1785-KA diagnostic counters and a description of what they contain

For information on error codes and the diagnostic indicators of other Data Highway and Data Highway Plus modules, refer to the Data Highway/Data Highway Plus Protocol and Command Set Reference Manual (publication 1770-6.5.16).

Using the LED Indicators

There are 7 LED indicators on the front panel of the 1785-KA module (figure 5.1). These indicators can help you in diagnosing problems with the module's installation and operation.

Figure 5.1
The LED Indicators

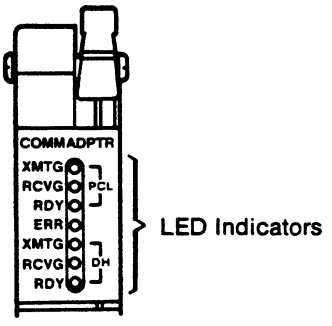

15733

The following table contains the meaning of each LED on the front panel of the 1785-KA.

This LED:	Lights:
PCL XMTG	when the 1785-KA module is passing the token, transmitting a command, or transmitting a reply message
PCL RCVG	when the module is receiving the token, a command, or a reply message from another node on the Data Highway Plus network
PCL RDY	when the module has a message stored in its transmit buffer and it is waiting to acquire the token so it can transmit
ERROR	and flashes any time the module: o replies to a received command (from either Data Highway or Data Highway Plus) with a remote error (STS byte equal to 10 hex through F0 hex) o is unable to send a packet onto either the Data Highway or the Data Highway Plus because of a local error
DH XMTG	when the 1785-KA module is current master of the Data Highway and is sending messages (commands, replies, or polling messages)
DH RCVG	when the 1785-KA is receiving a message from the Data Highway. When this LED and the DH XMTG LED are lit simultaneously, the module is polling.
DH RDY	when the module has a message and is ready to transmit. When this indicator is ON, the module is ready to assume mastership when it is polled.

If the module is passing the token or sending commands on a small Data Highway Plus network, the RCVG LED will appear to remain lit, while the XMTG LED will flicker.

Figure 5.2 shows examples of how the LEDs light for various module problems.

Figure 5.2
How the LEDs Light for Common Module Problems

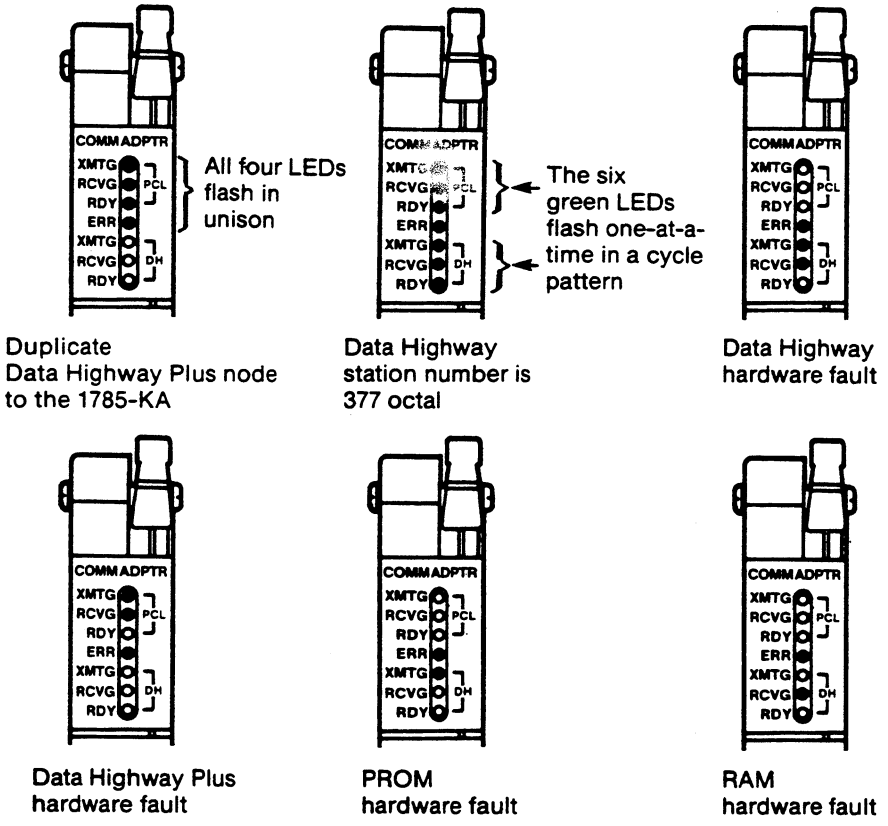

How to Use the 1785-KA Diagnostic Counters

The following sections tell you:

- what a diagnostic counter is
- how to read diagnostic counters
- what 1785-KA diagnostic counters contain

What is a Diagnostic Counter?

A diagnostic counter records an event of interest for debugging the module and for longer term reliability analysis.

The diagnostic counters occupy a block of the module's internal scratch RAM. Most are single byte counters that reset to zero when they overflow.

These counters provide a useful tool for diagnosing problems.

How to Read Diagnostic Counters

To read diagnostic counters, you must issue a **Diagnostic Read** command. This command can only be sent from a device:

- connected to a Data Highway or Data Highway Plus with an interface module that supports an asynchronous port
- that can format the diagnostic commands

Therefore, a PLC user program is unable to initiate a Diagnostic Read command.

Important: The location of the diagnostic counters in a Data Highway Plus module varies:

- from module to module
- between revision levels of the same type module

You must first request the location of these counters by transmitting a **Diagnostic Status** command to the module. Based on the address returned, you can use the number of the counters which follow as an offset to calculate:

- the location of a particular counter
- how many counter values you want returned

You can then use this information to format a Diagnostic Read command. The reply from the Diagnostic Read command will contain the data stored in the counters.

For more information on the Diagnostic Status and Diagnostic Read commands, refer to the Data Highway/Data Highway Plus Protocol and Command Set Reference Manual (publication 1770-6.5.16).

1785-KA Diagnostic Counters

The 1785-KA module stores diagnostic counters for both the Data Highway and Data Highway Plus networks.

Data Highway Diagnostic Counters

The 1785-KA stores 24 Data Highway counters in a total of 30 bytes. The following table contains a list of 1785-KA Data Highway diagnostic counter bytes and what they contain.

Counter Byte:	What the Counter Contains:
0	received ACK with bad CRC
1	timeout expired with no ACK received
2	mastership contention
3	error in received ACK
4	sum of bytes 1, 2, and 4
5	received a WAK
6	master died, we assumed mastership
7	false poll: no answer to poll of size = 1
8	received an ACK when not master
9	received frame too small
10	received frame with SRC = DST (source = destination)
11	unused
12	bad CRC in received frame
13	received a frame that was too long
14	no buffer for received message, WAK sent
15	received a retransmission of a frame
16	received frame aborted (line noise)
17,18	message successfully sent (low byte first)
19,20	message successfully received (low byte first)
21,22	command successfully sent (low byte first)
23,24	reply successfully received (low byte first)
25,26	command successfully received (low byte first)
27,28	reply successfully sent (low byte first)
29	reply could not be sent

Data Highway Plus Diagnostic Counters

The 1785-KA stores 31 Data Highway Plus counters in a total of 37 bytes. The following table contains a list of 1785-KA Data Highway Plus diagnostic counter bytes and what they contain.

Counter Byte:	What the Counter Contains:
0	received ACK with bad CRC
1	timeout expired with no ACK received
2	transmit retries exhausted
3	NAK/illegal protocol operation received
4	NAK/bad LSAP received
5	NAK/no memory received
6	received ACK/NAK too short
7	received ACK/NAK too long
8	something other than an ACK/NAK received
9	duplicate tokens found
10	duplicate nodes found
11	token pass timeout
12	token pass retries exhausted
13	claim token sequence entered
14	token claimed
15	bad CRC in received frame
16	NAK/illegal protocol operation sent
17	NAK/bad LSAP sent
18	NAK/no memory sent
19	received frame too small
20	received frame too long
21	received a retransmission of a frame
22	received frame aborted (line noise)
23,24	message successfully sent (low byte first)
25,26	message successfully received (low byte first)
27,28	command successfully sent (low byte first)
29,30	reply successfully received (low byte first)
31,32	command successfully received (low byte first)
33,34	reply successfully sent (low byte first)
35	reply could not be sent
36	number of active nodes

In the Following Appendices

In the following appendices we provide:

- 1785-KA product specifications
- examples of communicating between Data Highway and Data Highway Plus nodes

Appendix A
Specifications

Function:
- Interface a PLC-5/Data Highway Plus with a Data Highway

Location:
- single slot in a 1771 I/O chassis

Communication Ports
- Data Highway:
  15-pin male EIA D-shell connector
- Data Highway Plus:
  3-screw terminal block
- 1784-T50 Terminal:
  9-pin male EIA D-shell connector

Communication Rates
- Data Highway:
  57.6 Kb
- Data Highway Plus:
  57.6 Kb

Cabling
- To Data Highway and Data Highway Plus:
  user-supplied cable (refer to publication 1770-6.2.1)

Power Requirements
- 1.5A @ 5V DC

Ambient Temperature Rating
- 32°F to 140°F (0°C to 60°C) operational
- -40°F to 185°F (-40°C to 85°C) storage

Ambient Humidity Rating
- 5% to 95% noncondensing

Appendix B
Examples of Communicating Between Data Highway and Data Highway Plus

Appendix Objectives

This appendix contains examples that show how PLCs (or a computer) use the 1785-KA to communicate from:

- o Data Highway to Data Highway Plus
- o Data Highway Plus to Data Highway

Example Number:	Command:	Source: (Network/Device)	Destination: (Network/Device)	Special Case:
1	write	DH / PLC-2	DH + / PLC-5	--
	read	DH / PLC-2	DH + / PLC-5	--
2	write	DH / PLC-3	DH + / PLC-5	PLC-2 command
	read	DH / PLC-3	DH + / PLC-5	PLC-2 command
	write	DH / PLC-3	DH + / PLC-5	PLC-3 command
	read	DH / PLC-3	DH + / PLC-5	PLC-3 command
3	write	DH / computer	DH + / PLC-5	PLC-2 command
	read	DH / computer	DH + / PLC-5	PLC-2 command
	write	DH / computer	DH + / PLC-5	PLC-3 command
	read	DH / computer	DH + / PLC-5	PLC-3 command
4	write	DH + / PLC-5	DH / PLC-2	--
	read	DH + / PLC-5	DH / PLC-2	--
5	write	DH + / PLC-5	DH / PLC-3	--
	read	DH + / PLC-5	DH / PLC-3	--
6	write	DH + / PLC-5	DH + / PLC-5	remote DH + destination
	read	DH + / PLC-5	DH + / PLC-5	remote DH + destination

This appendix shows examples only. Refer to Chapter 4 for a detailed explanation of how to communicate through the 1785-KA.

Data Highway/Data Highway Plus Example Network Configuration

The following illustration shows the network configuration we will refer to in the examples contained in this appendix.

Important: All node addresses given in this illustration are in octal.

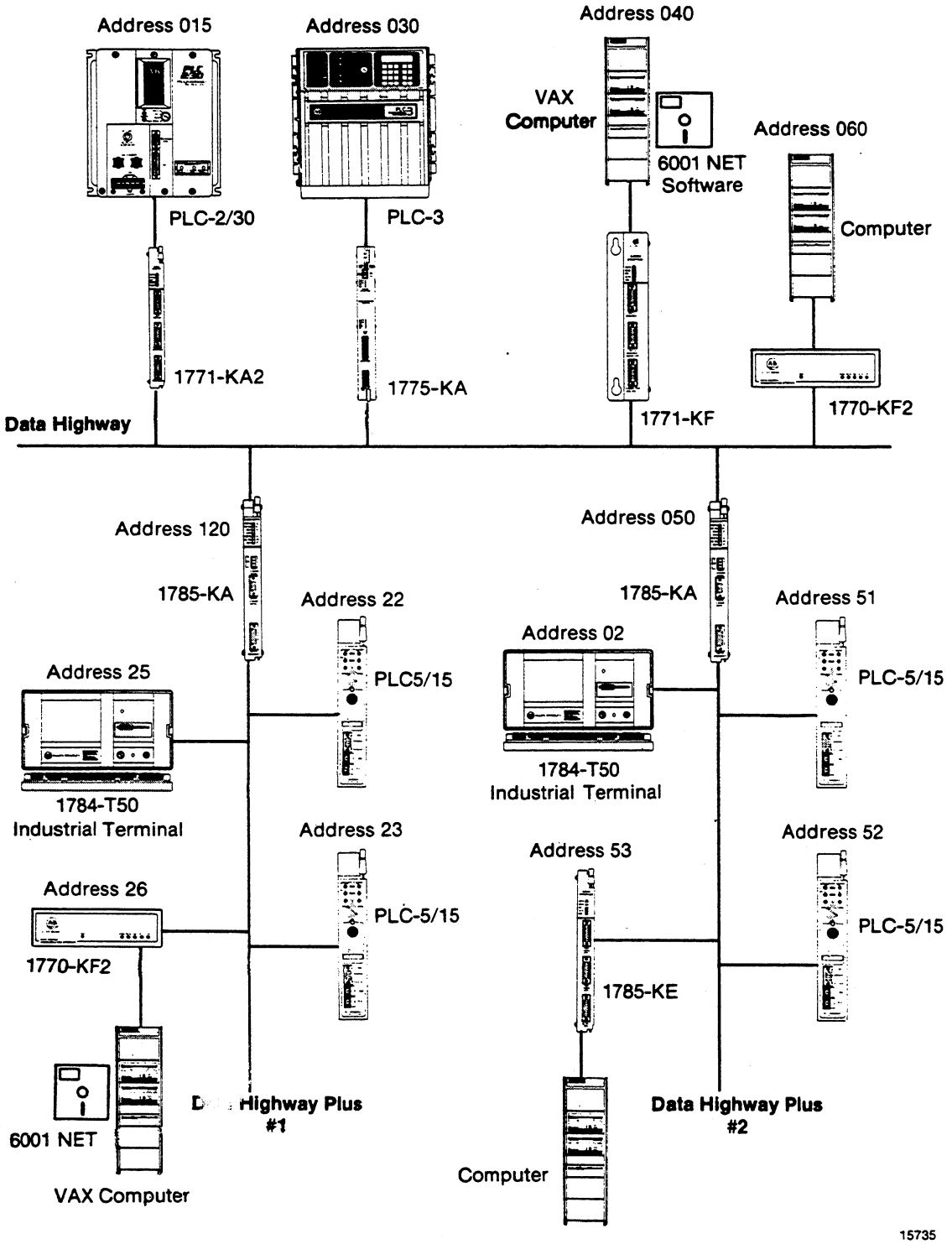

Example 1: PLC-2 (DH) to PLC-5 (DH+)

In this example:

- **PLC-2 Data Highway node address:** 015 (octal)
- **1785-KA node address:** 120 (octal)
- **PLC-5 node address:** 22 (octal)

The 1785-KA address (120) defines the network specification number of the Data Highway Plus it is connected to (for more information on the network specification number, refer to chapter 4). In this case, the PLC-5 we are communicating with is on Data Highway Plus network #1. Therefore, a node on Data Highway would address the PLC-5 at address 22 (octal) as node 122 (octal).

Since the PLC-5 is communicating with a PLC-2, the PLC-5 must have a file set up to look like a PLC-2 data table. This PLC-5 file must be the decimal equivalent of the PLC-2's node address. Since the PLC-2 is at address 015 (octal), the PLC-5 must create file 13 ($015_8 = 013_{10}$) to communicate with the PLC-2.

The following page contains an example of the PLC-2 ladder logic to communicate with a PLC-5.

PLC-2 Program Example

```
          015   077   015                                        027
(1)   ----[G]---[G]---[G]-------------------------------------(L)-------
                                                                 07

          030   122   010   040   043                          027
(2)   ----| |---| |---[G]---[G]---[G]-------------------------( )-------
            10    03                                             07

          032   122   010   044   047                          027
(3)   ----| |---| |---[G]---[G]---[G]-------------------------( )-------
            10    01                                             07

                                                               027
(4)   ---------------------------------------------------------(U)-------
                                                                 07

          030   031   031                                        030
(5)   ----|/|---|/|---|/|-------------------------------------( )-------
            00    00    10                                        10

          032   033   033                                        032
(6)   ----|/|---|/|---|/|-------------------------------------( )-------
            00    00    10                                        10

          040                                                    040
(7)   ----|/|-------------------------------------------------(TON)-----
            15                                                   1.0
                                                               PRE 999

          041                                                    041
(8)   ----|/|-------------------------------------------------(TON)-----
            15                                                   1.0
                                                               PRE 999

          042                                                    042
(9)   ----|/|-------------------------------------------------(TON)-----
            15                                                   1.0
                                                               PRE 999

          043                                                    043
(10)  ----|/|-------------------------------------------------(TON)-----
            15                                                   1.0
                                                               PRE 999

          040   041   042   043                                  050
(11)  ----[G]---[G]---[G]---[G]---+  ?-------------------------(PUT)-----
                                  |

          044   045   046   047                                  050
(12)  ----[G]---[G]---[G]---[G]---+  ?-------------------------(PUT)-----
                                  |
```

Rungs 7 through 10 are timer values to write to and then read from the PLC-5.

The following table summarizes the purpose of each rung in the example.

Rung:	What It Does:
1	communication zone header rung
2	command rung - normal PLC-2 Unprotected Write to PLC-5 node 22 (octal). The values in the timer accumulators 040 through 043 (octal) will be written into PLC-5 file 13 (decimal), element locations 8 through 11 (decimal).
3	command rung - normal PLC-2 Unprotected Read to PLC-5 node 22 (octal). The values from the timer accumulators that were written to the PLC-5 file 13 (decimal), element locations 8 through 11 (decimal) will be read into word locations 044 through 047 (octal) in the PLC-2.
4	communication zone delimiter rung
5	This rung will continuously cycle the command start bit for the normal Unprotected Write command.
6	This rung will continuously cycle the command start bit for the normal Unprotected Read command.
7	timer 040 (octal)
8	timer 041 (octal)
9	timer 042 (octal)
10	timer 043 (octal)
11	This rung will display the 4 timer accumulator values that are being written to the PLC-5.
12	This rung will display the 4 timer accumulator values that are being read from the PLC-5.

To verify that the PLC-2 test program is executing properly, check the timer accumulator values in rungs 11 and 12. You should see the timer values in word locations 040 through 043 (octal) appear in word locations 044 through 047 (octal) respectively.

Example 2: PLC-3 (DH) to PLC-5 (DH+)

In this example:

- **PLC-3 Data Highway node address:** 030 (octal)

- **1785-KA node address:** 050 (octal)
- **PLC-5 node address:** 051 (octal)

- **1785-KA node address:** 120 (octal)
- **PLC-5 node address:** 22 (octal)

We are sending PLC-2 commands from the PLC-3 to the PLC-5 at address 051 (octal). We are sending PLC-3 commands from the PLC-3 to the PLC-5 at address 22 (octal).

A 1785-KA address defines the network specification number of the Data Highway Plus it is connected to (for more information on the network specification number, refer to Chapter 4). In this case, one PLC-5 we are communicating with is on Data Highway Plus network #0 (1785-KA address 050). The other PLC-5 we are communicating with is on Data Highway Plus network #1 (1785-KA address 120).

Therefore, a node on Data Highway would address the PLC-5 at address 050 (octal) as node 050 (octal) and the PLC-5 at address 22 (octal) as node 122 (octal).

When a PLC-3 sends a PLC-2 type command, the PLC-5 must have a file set up to look like a PLC-2 data table. This PLC-5 file must be the decimal equivalent of the PLC-3 node address. Since the PLC-3 is at address 030 (octal), the PLC-5 must create file 24 ($030_8 = 024_{10}$) to communicate with the PLC-3.

The following page contains an example of the PLC-3 ladder logic to communicate with a PLC-5.

PLC-3 Program Example

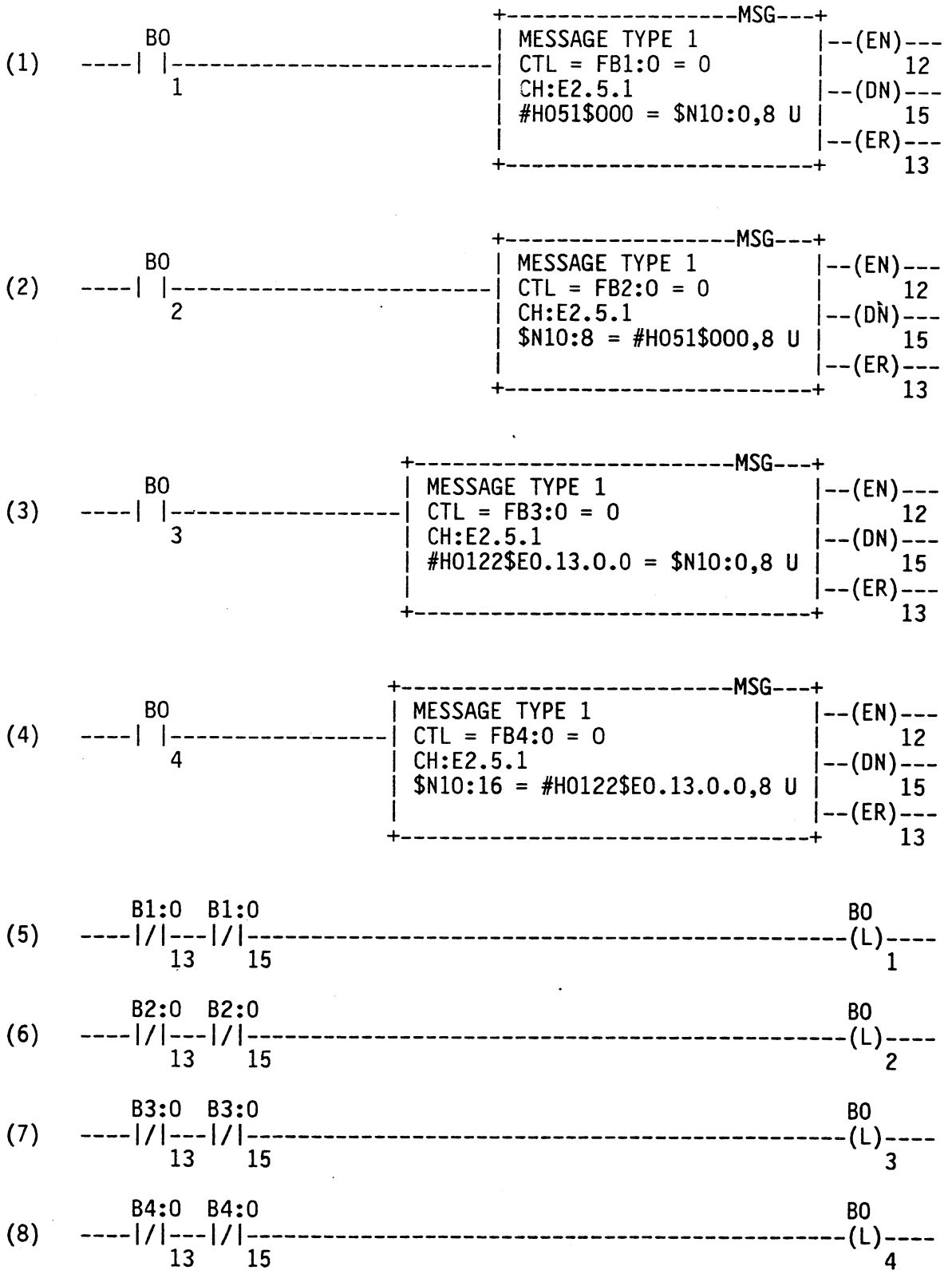

(9)

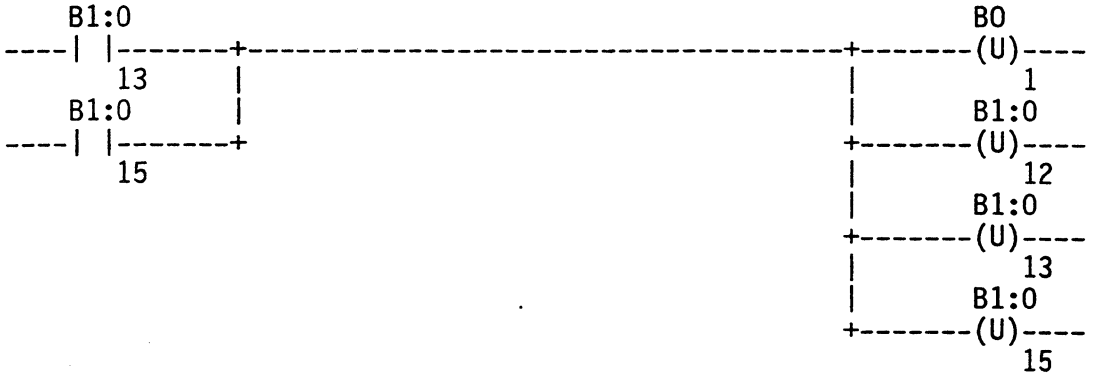
B1:0
13
B1:0
15
B0
(U)
1
B1:0
(U)
12
B1:0
(U)
13
B1:0
(U)
15

(10)

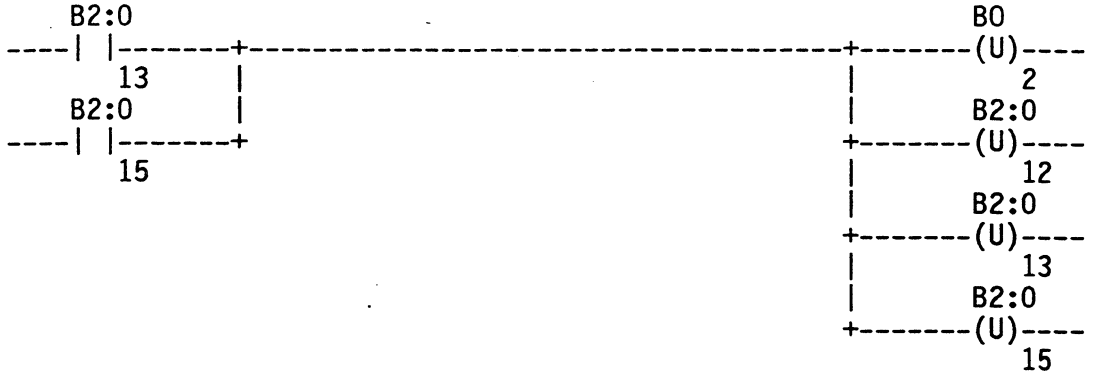
B2:0
13
B2:0
15
B0
(U)
2
B2:0
(U)
12
B2:0
(U)
13
B2:0
(U)
15

(11)

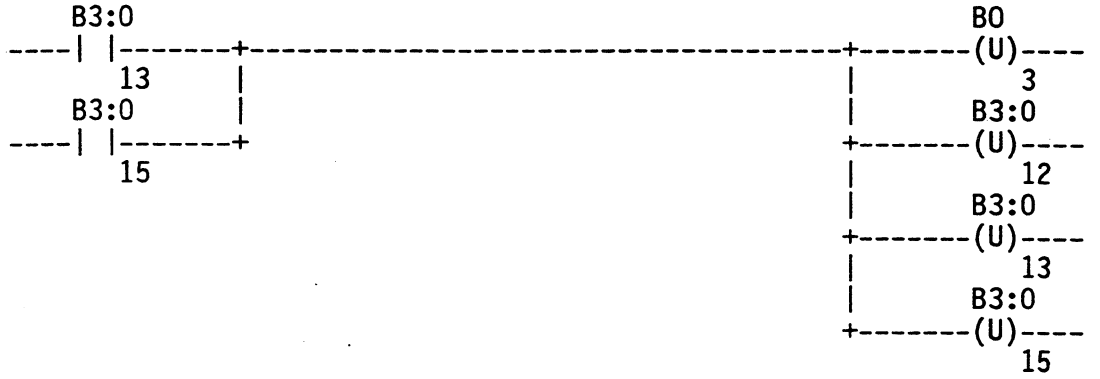
B3:0
13
B3:0
15
B0
(U)
3
B3:0
(U)
12
B3:0
(U)
13
B3:0
(U)
15

(12)

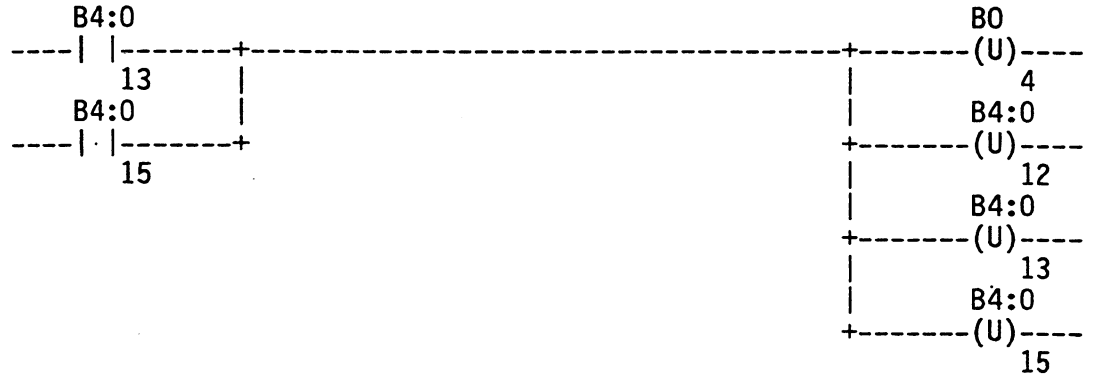
B4:0
13
B4:0
15
B0
(U)
4
B4:0
(U)
12
B4:0
(U)
13
B4:0
(U)
15

The following table summarizes the purpose of each rung in the example.

Rung:	What It Does:
1	This rung controls the initiation of a normal PLC-2 Unprotected Write command, treating the PLC-5 as though it were a PLC-2. This command will write 8 words from integer file 10 to the PLC-5's PLC-2 compatibility file (file 24), word locations 0 through 7.
2	This rung controls the initiation of a normal PLC-2 Unprotected Read command, treating the PLC-5 as though it were a PLC-2. This command will read the 8 words that were written to the PLC-5 in rung 1 and store them in the PLC-3 integer file 1, word locations 8 through 15.
3	This rung controls the initiation of a normal PLC-3 Unprotected Write command, treating the PLC-5 as though it were a PLC-3 but only specifying a four-level address. This command will write 8 words from integer file 10 to file 13, word locations 0 through 7 of the PLC-5 at node 22 (octal).
4	This rung controls the initiation of a normal PLC-3 Unprotected Read command, treating the PLC-5 as though it were a PLC-3 but only specifying a 4-level address. This command will read the 8 words that were written to the PLC-5 in rung 3 and store them in the PLC-3 integer file 10, word locations 16 through 23.
5	This rung will latch the message command initiation bit for rung 1 whenever both the message error bit and message done bit are off.
6	This rung will latch the message command initiation bit for rung 2 whenever both the message error bit and message done bit are off.
7	This rung will latch the message command initiation bit for rung 3 whenever both the message error bit and message done bit are off.
8	This rung will latch the message command initiation bit for rung 4 whenever both the message error bit and message done bit are off.
9	This rung will unlatch the message command initiation bit and control bits whenever an error bit or done bit is set for the message in rung 1.

Rung:	What It Does:
10	This rung will unlatch the message command initiation bit and control bits whenever an error bit or done bit is set for the message in rung 2.
11	This rung will unlatch the message command initiation bit and control bits whenever an error bit or done bit is set for the message in rung 3.
12	This rung will unlatch the message command initiation bit and control bits whenever an error bit or done bit is set for the message in rung 4.

To verify that this PLC-3 test program is executing properly, follow these steps:

1.
Look at the contents of integer file 10 by entering:

<DATA><DISPLAY> N10:0

2.
Change any value in word locations 0 through 7 in this file.

3.
Check the corresponding bits in your PLC-3 file to see if the bits transferred properly.

For PLC-2 commands (rungs 1 and 2), the values of word locations 0 through 7 should appear in word locations 8 through 15 respectively in the same PLC-3 file.

For PLC-3 commands (rungs 3 and 4), the values of word locations 0 through 7 should appear in word locations 16 through 23 respectively in the same PLC-3 file.

Important: Word locations 24 through 31 of PLC-3 integer file 10 will be used in example 5 later in this appendix.

Example 3: Computer (DH) to PLC-5 (DH+)

In this example, we show the computer sending:

- o PLC-2 read and write commands
- o PLC-3 read and write commands

We display the command formats that are sent over the RS-232-C (DF1) link as they would appear on a line monitor placed between the computer and its 1771-KF Data Highway module (all line monitor printouts are shown in hex).

In this example:

- o computer node address: 040 (octal)
- o 1785-KA node address: 050 (octal)
- o PLC-5 node address: 051 (octal)

If the computer sends a PLC-2 type command to the PLC-5, then the PLC-5 must create a PLC-2 compatibility file number 32 (computer address 040_8 = 32_{10}). This file must look like a PLC-2 data table to the computer.

If the computer sends a PLC-3 type command with a four-level extended address to the PLC-5, the command will be able to access any file in the PLC-5 data table.

For information on creating an RS-232-C asynchronous link driver for your computer, refer to the Data Highway/Data Highway Plus Protocol and Command Set Reference Manual (publication 1770-6.5.16).

PLC-2 Normal Unprotected Write

This example command writes 4 words of data to the PLC-5's PLC-2 compatibility file (file 32), word locations 20 through 23. The following paragraphs show line monitor examples for this command.

1.
Computer sends command to the 1771-KF:

DLE	STX	DST	SRC	CMD	STS	TNS	TNS	ADR	ADR	---------DATA----------								DLE	ETX	BCC
10	02	29	20	08	00	44	01	28	00	22	11	44	33	66	55	88	77	10	03	DE

2.
1771-KF responds to computer:

DLE	ACK
10	06

3.
1771-KF sends command to the PLC-5:

The 1771-KF sends the command onto the Data Highway. The 1785-KA checks the DST byte and passes the command onto Data Highway Plus and the PLC-5 node at 51_8.

4.
PLC-5 sends a reply to the 1771-KF:

The PLC-5 receives the command, executes the command, formats a reply, and sends the reply back to the 1771-KF.

5.
1771-KF sends the PLC-5 reply to the computer:

DLE	STX	DST	SRC	CMD	STS	TNS	TNS	DLE	ETX	BCC
10	02	20	29	48	00	44	01	10	03	2A

6.
Computer responds to 1771-KF:

DLE	ACK
10	06

PLC-2 Normal Unprotected Read

This example command reads the 4 words of data that you sent with the PLC-2 Normal Unprotected Write command. The following paragraphs show line monitor examples for this command.

1.
Computer sends command to the 1771-KF:

DLE	STX	DST	SRC	CMD	STS	TNS	TNS	ADR	ADR	SIZE	DLE	ETX	BCC
10	02	29	20	01	00	45	01	28	00	04	10	03	44

2.
1771-KF responds to computer:

DLE	ACK
10	06

3.
1771-KF sends command to the PLC-5:

The 1771-KF sends the command onto the Data Highway. The 1785-KA checks the DST byte and passes the command onto Data Highway Plus and the PLC-5 node at 51_8.

4.
PLC-5 sends a reply to the 1771-KF:

The PLC-5 receives the command, executes the command, formats a reply, and sends the reply back to the 1771-KF.

5.
1771-KF sends the PLC-5 reply to the computer:

DLE	STX	DST	SRC	CMD	STS	TNS	TNS	----------DATA-------								DLE	ETX	BCC
10	02	20	29	41	00	45	01	22	11	44	33	66	55	88	77	10	03	CC

6.
Computer responds to 1771-KF:

DLE	ACK
10	06

PLC-3 Normal Unprotected Write (Word Range Write)

This example command writes 4 words of data to the PLC-5 (node 51_8) integer file 10, word locations 15 through 18. A computer (sending a PLC-3 command) can only specify a 4-level address to the PLC-5. In this example, the address is in logical binary form. The following paragraphs show line monitor examples for this command.

1.
Computer sends command to the 1771-KF:

```
DLE STX DST SRC CMD STS TNS TNS FNC PO PO TT TT |--ADDRESS-----|
10  02  29  20  0F  00  46  01  00  00 00 04 00  0F 00 0A 0F 00

|---------DATA---------| DLE ETX BCC
22 11 44 33 66 55 88 77  10  03  D1
```

2.
1771-KF responds to computer:

```
DLE ACK
10  06
```

3.
1771-KF sends command to the PLC-5:

The 1771-KF sends the command on the Data Highway. The 1785-KA checks the DST byte and passes the command on Data Highway Plus and the PLC-5 node at 51_8.

4.
PLC-5 sends a reply to the 1771-KF:

The PLC-5 receives the command, executes the command, formats a reply, and sends the reply back to the 1771-KF.

5.
1771-KF sends the PLC-5 reply to the computer:

```
DLE STX DST SRC CMD STS TNS TNS DLE ETX BCC
10  02  20  29  4F  00  46  01  10  03  21
```

6.
Computer responds to 1771-KF:

```
DLE ACK
10  06
```

PLC-3 Normal Unprotected Read (Word Range Read)

This example command reads the four words of data that you sent with the PLC-3 Word Range Write command. A computer (sending a PLC-3 command) can only send a 4-level address to a PLC-5. In this example, the address in in logical ASCII form. The following paragraphs show line monitor examples for this command.

1.
Computer sends command to the 1771-KF:

```
                                                    ---------ADDRESS----------
DLE STX DST SRC CMD STS TNS TNS FNC PO PO TT TT NL $  N  1  0  :  1  5  NL
10  02  29  20  0F  00  47  01  01  00 00 04 00 00 24 4E 31 30 3A 31 35 00

SIZE DLE ETX BCC
04   10  03  E4
```

2.
1771-KF responds to computer:

```
DLE ACK
10  06
```

3.
1771-KF sends command to the PLC-5:

The 1771-KF sends the command on the Data Highway. The 1785-KA checks the DST byte and passes the command on Data Highway Plus and the PLC-5 node at 51_8.

4.
PLC-5 sends a reply to the 1771-KF:

The PLC-5 receives the command, executes the command, formats a reply, and sends the reply back to the 1771-KF.

5.
1771-KF sends the PLC-5 reply to the computer:

```
DLE STX DST SRC CMD STS TNS TNS ------------DATA------- DLE ETX BCC
10  02  20  29  4F  00  47  01  22 11 44 33 66 55 88 77 10  03  BC
```

6.
Computer responds to 1771-KF:

```
DLE ACK
10  06
```

Example 4: PLC-5 (DH+) to PLC-2 (DH)

In this example, we send PLC-2 read and write commands from the PLC-5. The node addresses are as follows:

- PLC-5 node address: 22 (octal)
- 1785-KA Data Highway address: 120 (octal)
- 1785-KA Data Highway Plus address: 20 (octal)
- Data Highway Plus link number: 1
- PLC-2 Data Highway node address: 015 (octal)

PLC-2 Write Commands

This example message instruction will write eight words from integer file 7, word locations 0 through 7, to the PLC-2 node 15 (octal), data table words 060 through 067 (octal).

Program a message (MSG) instruction with the parameters shown below. Also, you must set up the message instruction for continuous mode by toggling bit N30:0/11 to ON.

```
MESSAGE INSTRUCTION DATA MONITOR FOR CONTROL BLOCK N30:0

Read/Write:                      WRITE          ignore if timed-out:  0 TO
PLC-5 Data Table Address:        N7:0                 to be retried:  0 NR
Size in Elements:                8                 awaiting execution:  0 EW
Local/Remote:                    REMOTE                  continuous:  1 CO
   Remote Station:               015                          error:  0 ER
   Link ID:                      00                     message done:  0 DN
   Remote Link Type:             DATA HIGHWAY   message transmitting:  1 ST
Local Node Address:              20                  message enabled:  1 EN
Processor Type:                  PLC-2
Destination Data Table Address:  050          control bit addr: N30:0/8

ERROR CODE: 0


Press a key for desired function, or <ESC> or <RETURN> to exit monitor.
[
RUN      no forces        decimal data      decimal addr    PLC-5 Addr 22
         SIZE IN                                        TOGGLE
         ELEMNTS                                          BIT
           F3                                             F9
```

15736-A

PLC-2 Read Commands

This example message instruction will read the eight words that were written to the PLC-2 data table with the PLC-2 write command. This instruction will store the data in integer file 7, word locations 10 to 17.

Program a message (MSG) instruction with the parameters shown below. Also, you must set up the message instruction for continuous mode by toggling bit N30:20/11 to ON.

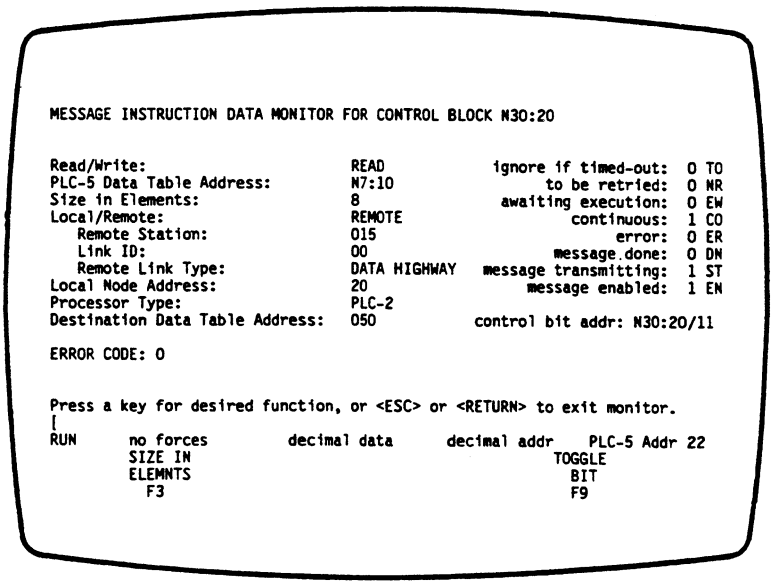

15737

Program Verification

To verify that the example programs above are executing properly, follow these steps:

1.
Look at the PLC-5 file contents of integer file 7 by typing:

<DISPLAY MONITOR> N7:0

2.
Change any value in word locations 0 through 7 in this file.

3.
The values in word locations 10 through 17 should be the same as the values in word locations 0 through 7.

Important: Word locations 20 through 27 will be used in example 5, and word locations 30 through 37 will be used in example 6 later in this appendix.

Example 5: PLC-5 (DH+) to PLC-3 (DH)

In this example, we send PLC-3 read and write commands from the PLC-5. The node addresses are as follows:

- PLC-5 node address: 22 (octal)
- 1785-KA Data Highway address: 120 (octal)
- 1785-KA Data Highway Plus address: 20 (octal)
- Data Highway Plus link number: 1
- PLC-3 Data Highway node address: 030 (octal)

PLC-3 Write Commands

This example message instruction will write eight words from integer file 7, word locations 0 through 7, to the PLC-3 node 30 (octal), integer file 10, word locations 24 through 31 (octal).

Program a message (MSG) instruction with the parameters shown below. Also, you must set up the message instruction for continuous mode by toggling bit N30:40/11 to ON.

```
MESSAGE INSTRUCTION DATA MONITOR FOR CONTROL BLOCK N30:40

Read/Write:                        WRITE          ignore if timed-out:  0 TO
PLC-5 Data Table Address:          N7:0                 to be retried:  0 NR
Size in Elements:                  8                 awaiting execution:  0 EW
Local/Remote:                      REMOTE                    continuous:  1 CO
   Remote Station:                 030                          error:  0 ER
   Link ID:                        00                     message done:  0 DN
   Remote Link Type:               DATA HIGHWAY  message transmitting:  1 ST
Local Node Address:                20                    message enabled:  1 EN
Processor Type:                    PLC-3
Destination Data Table Address:    N10:24       control bit addr: N30:40/11

ERROR CODE: 0


Press a key for desired function, or <ESC> or <RETURN> to exit monitor.
[
RUN      no forces        decimal data     decimal addr    PLC-5 Addr 22
         SIZE IN                                          TOGGLE
         ELEMNTS                                            BIT
           F3                                               F9
```

15736-B

PLC-3 Read Commands

This example message instruction will read the eight words that were written to the PLC-3 file with the PLC-3 write command. This instruction will store the data in integer file 7, word locations 20 through 27.

Program a message (MSG) instruction with the parameters shown below. Also, you must set up the message instruction for continuous mode by toggling bit N30:60/11 to ON.

```
MESSAGE INSTRUCTION DATA MONITOR FOR CONTROL BLOCK N30:20

Read/Write:                      READ          ignore if timed-out:  0 TO
PLC-5 Data Table Address:        N7:20               to be retried:  0 NR
Size in Elements:                8                awaiting execution:  0 EW
Local/Remote:                    REMOTE                continuous:  1 CO
   Remote Station:               030                        error:  0 ER
   Link ID:                      00                   message done:  0 DN
   Remote Link Type:             DATA HIGHWAY  message transmitting:  1 ST
Local Node Address:              20                 message enabled:  1 EN
Processor Type:                  PLC-3
Destination Data Table Address:  N10:24       control bit addr: N30:20/11

ERROR CODE: 0

Press a key for desired function, or <ESC> or <RETURN> to exit monitor.
[
RUN      no forces        decimal data      decimal addr    PLC-5 Addr 22
         SIZE IN                                          TOGGLE
         ELEMNTS                                            BIT
           F3                                               F9
```

15736-C

Program Verification

To verify that the example programs above are executing properly, follow these steps:

1.
Look at the PLC-5 file contents of integer file 7 by typing:

<DISPLAY MONITOR> N7:0

2.
Change any value in word locations 0 through 7 in this file.

3.
The values in word locations 20 through 27 should be the same as the values in word locations 0 through 7.

Important: Word locations 10 through 17 were used in example 4, and word locations 30 through 37 will be used in example 6 later in this appendix.

Example 6: PLC-5 (DH+) to PLC-5 (DH+)

In this example, we send PLC-5 read and write commands from the PLC-5. The node addresses are as follows:

Local PLC-5:
- o PLC-5 node address: 51 (octal)
- o 1785-KA Data Highway address: 050 (octal)
- o 1785-KA Data Highway Plus address: 50 (octal)
- o Data Highway Plus link number: 0

Remote PLC-5:
- o PLC-5 node address: 22 (octal)
- o 1785-KA Data Highway address: 120 (octal)
- o 1785-KA Data Highway Plus address: 20 (octal)
- o Data Highway Plus link number: 1

PLC-3 Read Commands

This example message instruction will read the eight words from the remote PLC-5 integer file 7, word locations 0 through 7. The instruction will store the data in the local PLC-5 integer file 7, word locations 0 through 7.

Program a message (MSG) instruction with the parameters shown below. Also, you must set up the message instruction for continuous mode by toggling bit N10:0/11 to ON.

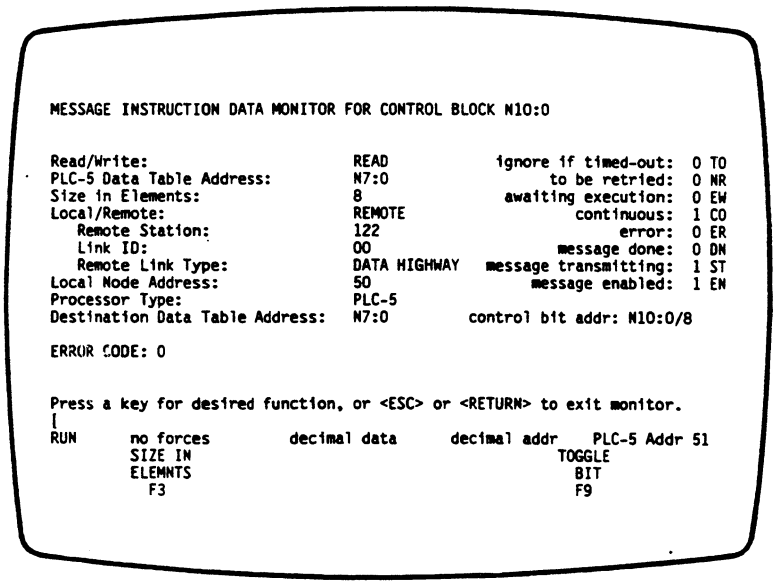

15738-A

PLC-5 Write Commands

This example message instruction will write eight words that were read from the remote PLC-5 in the previous program (PLC-5 Read command) back to the remote PLC-5 integer file 7, word locations 30 to 37.

Program a message (MSG) instruction with the parameters shown below. Also, you must set up the message instruction for continuous mode by toggling bit N10:20/11 to ON.

```
MESSAGE INSTRUCTION DATA MONITOR FOR CONTROL BLOCK N10:20

Read/Write:                        WRITE          ignore if timed-out:  0 TO
PLC-5 Data Table Address:          N7:0                to be retried:  0 NR
Size in Elements:                  8                 awaiting execution:  0 EW
Local/Remote:                      REMOTE                 continuous:  1 CO
   Remote Station:                 122                         error:  0 ER
   Link ID:                        00                  message done:  0 DN
   Remote Link Type:               DATA HIGHWAY  message transmitting:  1 ST
Local Node Address:                50                  message enabled:  1 EN
Processor Type:                    PLC-5
Destination Data Table Address:    N7:30        control bit addr: N10:20/11

ERROR CODE: 0


Press a key for desired function, or <ESC> or <RETURN> to exit monitor.
[
RUN      no forces        decimal data      decimal addr    PLC-5 Addr 51
         SIZE IN                                          TOGGLE
         ELEMNTS                                            BIT
           F3                                               F9
```

15738-B

Program Verification

To verify that the example programs above are executing properly, follow these steps:

1.
Look at the PLC-5 (node 51 octal) file contents of integer file 7 by typing:

<DISPLAY MONITOR> N7:0

2.
Change any value in word locations 0 through 7 in this file.

3.
The values in word locations 30 through 37 should be the same as the values in word locations 0 through 7.

Important: Word locations 10 through 17 were used in example 4, and word locations 20 through 27 were used in example 5 earlier in this appendix.

A

Applications..... 2-3

C

Cables..... 2-2,3-7
Communication
  Data Highway..... 4-1
  Data Highway Plus..... 4-9
  Examples..... B-1
  From a computer..... 4-7,B-11
  From a PLC-2..... 4-2,B-3
  From a PLC-3..... 4-5,B-6
  From a PLC-5..... 4-10,B-16
Communication rate
  Data Highway..... 2-4,3-2
  Data Highway Plus..... 2-4,3-2
Connectors on Front Panel..... 2-2,3-7

D

Data Highway
  address..... 3-3
  cables..... 2-2
  communicating from..... 4-1
  connector..... 2-2
  diagnostic counters..... 5-5
  other products..... 1-4
  What is it?..... 2-2
Data Highway Plus
  address..... 3-3
  cables..... 2-2
  communication from..... 4-9
  connector..... 2-2
  diagnostic counters..... 5-6
  network specification number..... 3-3,4-1
  other products..... 1-4
  What is it?..... 2-2
Diagnostic counters..... 5-3
Diagnostic indicators..... 2-2,5-1

F

Front Panel (1785-KA)..... 2-1

I

Industrial Terminal (see T50)
Installing
  cable connections..... 3-7
  keying..... 3-6
  mounting..... 3-6
  powering up..... 3-9
  setting switches..... 3-1

L

LEDs..... 2-2,5-1

N

Network Specification Number..... 3-3,4-1
Node..... 2-2

P

Peer Communications Link (see Data Highway Plus)
Publications..... 1-4

R

Related products..... 1-4
Related publications..... 1-5

S

Specifications..... A-1
Station number..... 3-5
Switch settings..... 3-1

T

T50 Industrial Terminal
- cable..... 3-11
- connector..... 2-2,3-11
- message instruction..... 4-10,B-16
- publication..... 1-4

Terminology..... 1-3
Troubleshooting
- diagnostic counters..... 5-3
- diagnostic indicators (LEDs)..... 5-1

ALLEN-BRADLEY
A ROCKWELL INTERNATIONAL COMPANY

Allen-Bradley has been helping its customers improve productivity and quality for 90 years. A-B designs, manufactures and supports a broad range of control and automation products worldwide. They include logic processors, power and motion control devices, man-machine interfaces and sensors. Allen-Bradley is a subsidiary of Rockwell International, one of the world's leading technology companies.

With major offices worldwide.

Algeria • Argentina • Australia • Austria • Bahrain • Belgium • Brazil • Bulgaria • Canada • Chile • China, PRC • Colombia • Costa Rica • Croatia • Cyprus • Czech Republic • Denmark • Ecuador • Egypt • El Salvador • Finland • France • Germany • Greece • Guatemala • Honduras • Hong Kong • Hungary • Iceland • India • Indonesia • Israel • Italy • Jamaica • Japan • Jordan • Korea • Kuwait • Lebanon • Malaysia • Mexico • New Zealand • Norway • Oman • Pakistan • Peru • Philippines • Poland • Portugal • Puerto Rico • Qatar • Romania • Russia–CIS • Saudi Arabia • Singapore • Slovakia • Slovenia • South Africa, Republic • Spain • Switzerland • Taiwan • Thailand • The Netherlands • Turkey • United Arab Emirates • United Kingdom • United States • Uruguay • Venezuela • Yugoslavia

World Headquarters, Allen-Bradley, 1201 South Second Street, Milwaukee, WI 53204 USA, Tel: (1) 414 382-2000 Fax: (1) 414 382-4444

Publication 1785-6.5.1 February 1988

PN 404619101

Copyright 1988 Allen-Bradley Company, Inc. Printed in USA