User Manual

Allen-Bradley

HC-DySC Dynamic Voltage Sag Corrector

Catalog Numbers 1608P-200A480V*xxx*-HC and 1608P-200A480V*xxx*-GT

Allen-Bradley • Rockwell Software

Rockwell Automation

Important User Information

Read this document and the documents listed in the additional resources section about installation, configuration, and operation of this equipment before you install, configure, operate, or maintain this product. Users are required to familiarize themselves with installation and wiring instructions in addition to requirements of all applicable codes, laws, and standards.

Activities including installation, adjustments, putting into service, use, assembly, disassembly, and maintenance are required to be carried out by suitably trained personnel in accordance with applicable code of practice.

If this equipment is used in a manner not specified by the manufacturer, the protection provided by the equipment may be impaired.

In no event will Rockwell Automation, Inc. be responsible or liable for indirect or consequential damages resulting from the use or application of this equipment.

The examples and diagrams in this manual are included solely for illustrative purposes. Because of the many variables and requirements associated with any particular installation, Rockwell Automation, Inc. cannot assume responsibility or liability for actual use based on the examples and diagrams.

No patent liability is assumed by Rockwell Automation, Inc. with respect to use of information, circuits, equipment, or software described in this manual.

Reproduction of the contents of this manual, in whole or in part, without written permission of Rockwell Automation, Inc., is prohibited.

Throughout this manual, when necessary, we use notes to make you aware of safety considerations.

	**WARNING:** Identifies information about practices or circumstances that can cause an explosion in a hazardous environment, which may lead to personal injury or death, property damage, or economic loss.
	**ATTENTION:** Identifies information about practices or circumstances that can lead to personal injury or death, property damage, or economic loss. Attentions help you identify a hazard, avoid a hazard, and recognize the consequence.
IMPORTANT	Identifies information that is critical for successful application and understanding of the product.

Labels may also be on or inside the equipment to provide specific precautions.

	**SHOCK HAZARD:** Labels may be on or inside the equipment, for example, a drive or motor, to alert people that dangerous voltage may be present.
	**BURN HAZARD:** Labels may be on or inside the equipment, for example, a drive or motor, to alert people that surfaces may reach dangerous temperatures.
	**ARC FLASH HAZARD:** Labels may be on or inside the equipment, for example, a motor control center, to alert people to potential Arc Flash. Arc Flash will cause severe injury or death. Wear proper Personal Protective Equipment (PPE). Follow ALL Regulatory requirements for safe work practices and for Personal Protective Equipment (PPE).

Chapter 5

Display Screen

Chapter 6

Maintenance

Chapter 7

Specifications and Dimensions

Appendix A

Generator Transfer (GT) Option

Read this preface to familiarize yourself with the rest of the manual. It provides information concerning:

- who should use this manual
- the purpose of this manual
- related documentation
- conventions used in this manual

Who Should Use This Manual

Use this manual if you are responsible for designing, installing, programming, or troubleshooting systems that use the HC-DySC™ dynamic voltage sag corrector.

Purpose of This Manual

This manual is a reference guide for the 1608P-200A480V*xxx*-HC and 1608P-200A480V*xxx*-GT models. It describes the procedures you use to install, apply power, maintain, and use these modules.

This product contains a sealed lithium battery which is permanently connected and should only be removed or replaced by trained professionals.

At the end of its life, the battery contained in this product should be collected separately from any unsorted municipal waste.

The collection and recycling of batteries helps protect the environment and contributes to the conservation of natural resources as valuable materials are recovered.

Additional Resources

These documents contain additional information concerning related products from Rockwell Automation.

Resource	Description
Bulletin 1608 DySC Voltage Sag Corrector Technical Data, 1608-TD001_-EN-P	Provides technical specifications and dimensions for the DySC® line of voltage sag protectors.
Industrial Automation Wiring and Grounding Guidelines, publication 1770-4.1	Provides general guidelines for installing a Rockwell Automation industrial system.
Product Certifications website, http://www.ab.com	Provides declarations of conformity, certificates, and other certification details.

You can view or download publications at http:/www.rockwellautomation.com/literature/. To order paper copies of technical documentation, contact your local Allen-Bradley distributor or Rockwell Automation sales representative.

Notes:

Introduction

The HC-DySC dynamic voltage sag corrector is engineered to provide years of trouble-free voltage sag (dip) protection in a healthcare environment. The patented DySC technology does not use batteries, requires only routine maintenance, includes three-stage transient voltage, surge suppression, and has unparalleled energy efficiency. Most electronic devices that are found in industry today are susceptible to power disturbances. Momentary sags in line voltage can reset or damage sensitive production equipment. The system provides instantaneous and dynamic sag correction to help your equipment ride through these common events. The corrector connects normal utility power directly to the load until a voltage sag occurs. During a sag event, the corrector's inverter is activated, adding missing voltage to keep the load voltage within the normal range. When utility power returns to normal, the inverter is deactivated and is quickly ready to correct the next sag.

The HC-DySC corrector reports these voltage sag events through its integrated touch-screen display. It provides system status, voltage sag notification and history, runtime statistics, and system history in a simple and intuitive touch-based user interface.

Safety Considerations

The HC-DySC corrector is designed to operate in healthcare environments. Follow these safety and installation guidelines.

ATTENTION: The HC-DySC corrector helps protect diagnostic imaging equipment and facilities support systems against voltage sags and momentary power interruptions. Do not use to protect life-critical patient care equipment.

SHOCK HAZARD: The HC-DySC corrector has high voltage present up to 5 minutes after disconnection from the AC line. If the exposed or disconnected terminals, cables, or parts are touched, it can lead to serious injuries or even death. Wait for a minimum of 5 minutes before performing any service or test after power is removed. High voltage remains if red status indicators above capacitor banks are lighted. Keep the cabinet doors closed and locked to help ensure proper cooling airflow and to help protect personnel from dangerous voltages.

ATTENTION: To reduce the risk of fire or electric shock, install in a temperature and humidity controlled, indoor environment, free of conductive contaminants.

- Avoid installing directly near heat-emitting equipment such as ovens, heaters, or furnaces.
- Ambient temperature must not exceed 40 °C (104 °F).
- Do not operate near water or excessive humidity (95% max).
- When punching or drilling holes for conduit fittings, take care to avoid dropping metallic particles inside the enclosure as this can result in electrical damage.
- The system is not intended for outdoor use.
- The operating environment should be maintained within the parameters stated in this manual.
- Only authorized service personnel should perform service.
- Help ensure all power is disconnected before installation or service.

ATTENTION: Electrostatic discharge (ESD) can damage internal components. Do not touch circuit boards or electronic components with hands or metal objects. Not rated to directly power life support equipment.

- Help ensure the area around the corrector is clean and uncluttered.
- Observe all DANGER, CAUTION, and WARNING notices that are affixed to the inside and outside of the equipment.

Installation

Installation Check List

Before proceeding, take a few minutes to review the necessary installation steps:

- All packing materials and restraints have been removed.
- The HC-DySC corrector is placed in its installed location.
- All conduits and cables are properly routed.
- All power cables are properly terminated.
- A ground conductor is properly installed and terminated.
- If required, check that the neutral connection is properly terminated.
- The surrounding area is clean and dust-free.
- Adequate work space and lighting is available.
- Operational checks have been reviewed and completed.

Inspecting and Unpacking

- Lift only at the base with a fork truck or pallet jack.
- Carefully inspect the outer packaging for evidence of damage during transit. Do not install a damaged cabinet. Report any damage to the carrier and contact your local sales or service immediately.
- Check the label for correct model number with the packaging list to verify you have received the correct voltage, current, and wiring configurations.
- After removing the packaging material, inspect the contents for any evidence of physical damage, and compare each item with the bill of lading. If damage has occurred or shortages are evident, contact your carrier immediately.

Location (Environment)

Install the voltage sag corrector in a protected environment. The location must provide adequate airflow and must be free from excessive dust, corrosive fumes, or conductive contaminants. Do not operate the corrector in an environment where the ambient temperature or humidity is beyond the specified limits that are given in this manual.

System Components

The HC-DySC voltage sag corrector consists of one enclosure with an integral maintenance bypass switch to prevent power disruption during service and maintenance.

Floor Mounting

Secure the corrector to the floor using fasteners and fittings appropriate for the type of floor. Holes are provided in the base channels; see Figure 1 for mounting dimensions.

TIP **Top or bottom cable entry is allowed. See Figure 1 and Figure 2 on page 11.**

Figure 1 - Bottom View Floor Mount Dimensions

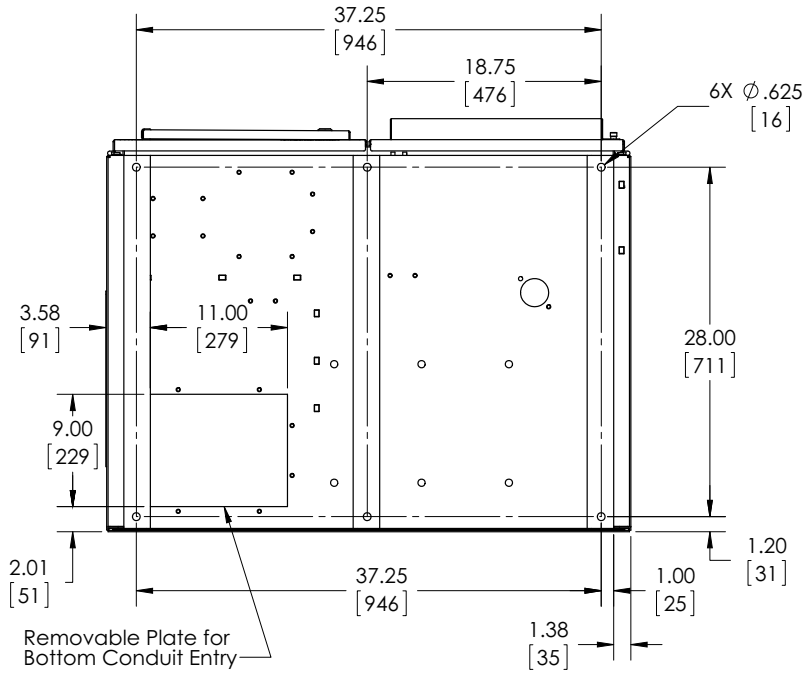

Clearance

The enclosure doors hinge on both the right and left. See Figure 30 on page 42 for dimensions including door swing. Leave required clearances:

- Door swing must allow doors to open at least 90°
- 3”[75 mm] on right side for air filter clearance when the door is open
- Left side clearance is required for bottom entry cable installation

Circuit Breaker Recommendations

Branch circuit protection upstream is required. Maximum allowed circuit breaker ratings are listed in Table 1. Branch circuit protection that is rated less than the HC-DySC corrector current rating may result in nuisance tripping.

Table 1 - Branch Circuit Protection Ratings

HC-DySC Rating	Max. MCCB Rating
200 A	250 A

WARNING: To reduce the risk of fire, use only on circuits that are provided with 250 ampere maximum branch circuit protection in accordance with the National Electric Code ANSI/NFPA 70.

Electrical Terminations

Use a qualified electrician to install the corrector in compliance with all local, and national electric codes. The input (line) and output (load) terminals are located behind the left door. Terminal details are shown in Figure 5 on page 14.

Accessing Terminations

For top entry, remove the top gland plate, which is shown in Figure 2, to access input and output terminals. This plate may be removed for drilling or punching holes for conduit. Alternate bottom entry should utilize the bottom gland plate shown in Figure 1. Access to the communications port is above the front doors, as shown in Figure 6 on page 15. A separate conduit knock-out is provided for top entry of communications conductors, as shown in Figure 2.

IMPORTANT	**When punching or drilling holes for conduit fittings, take care to avoid dropping metallic particles inside the enclosure. Metallic contamination voids the product warranty.**

Figure 2 - Top Conductor Entry

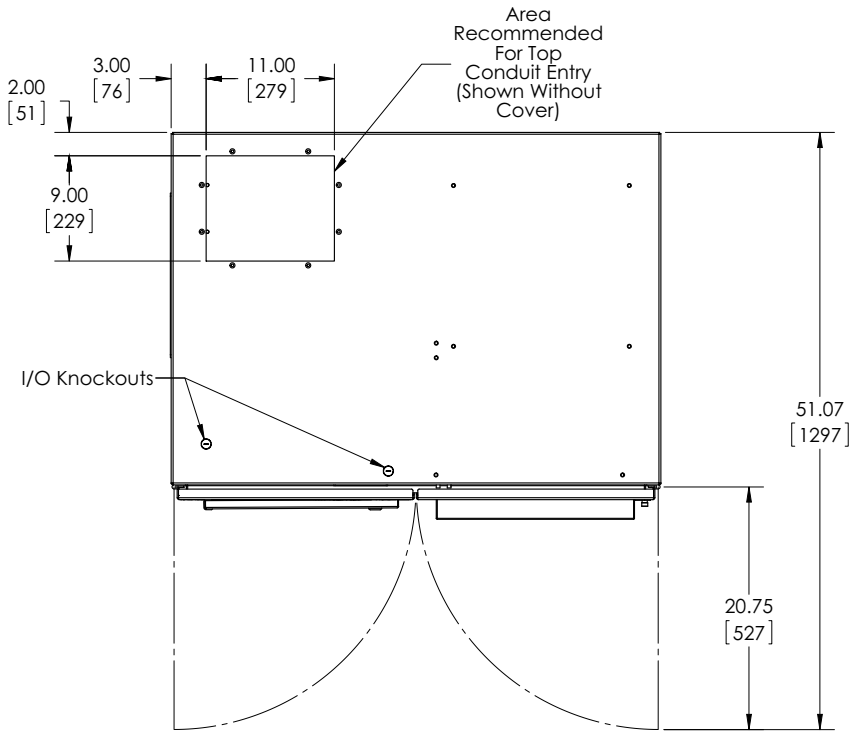

IMPORTANT	**Metallic particles inside the enclosure void the warranty.**

3-Wire Versus 4-Wire Configurations

Models are available for use with either 3-wire (L1, L2, L3) or 4-wire (L1, L2, L3, N) sources. The input N conductor must be connected to 4-wire models for proper operation. Do not connect a N conductor to 3-wire models.

3-Wire Models

Catalog numbers containing V3 are configured for 3-wire source (L1, L2, L3) and 3-wire loads (X1, X2, X3). Do not connect a N conductor to 3-wire models. Figure 3 shows the 3-wire system wiring schematically, including the internal maintenance bypass switch.

Figure 3 - HC-DySC Corrector 3-Wire Configuration

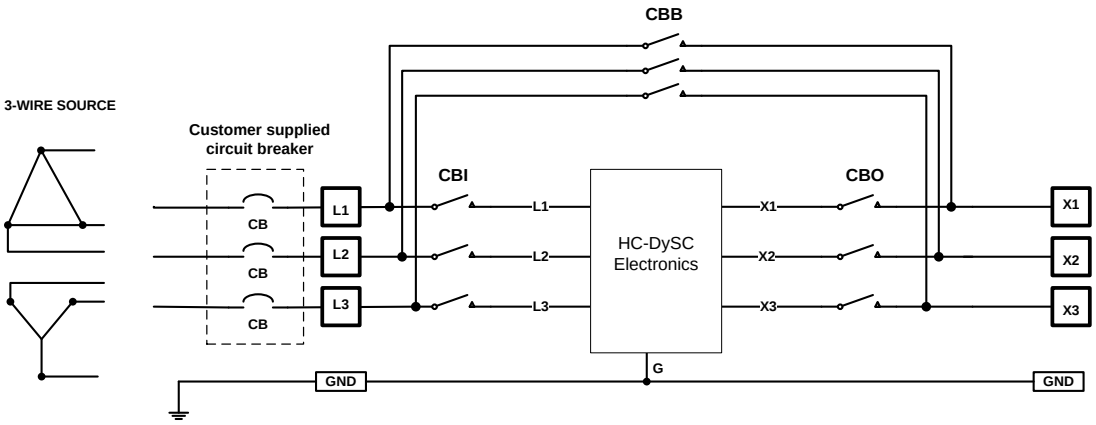

IMPORTANT **For Canadian Users: The 200 A HC-DySC models rated greater than 440V have not been evaluated for compliance with CSA 22.2 No. 107.1-01 when connected to corner-grounded or un-grounded delta power sources. Contact Rockwell Automation Technical Support for assistance.**

4-Wire Models

Catalog numbers containing V4 are configured for 4-wire source (L1, L2, L3, N) and either 3-wire or 4-wire loads. The source N conductor must be connected for proper operation of these models. Connect both input and output N conductors to the bus bar labeled NEUTRAL (See Figure 5). Figure 4 shows the 4-wire system wiring schematically, including the internal maintenance bypass switch.

Figure 4 - HC-DySC 4-Wire Configuration

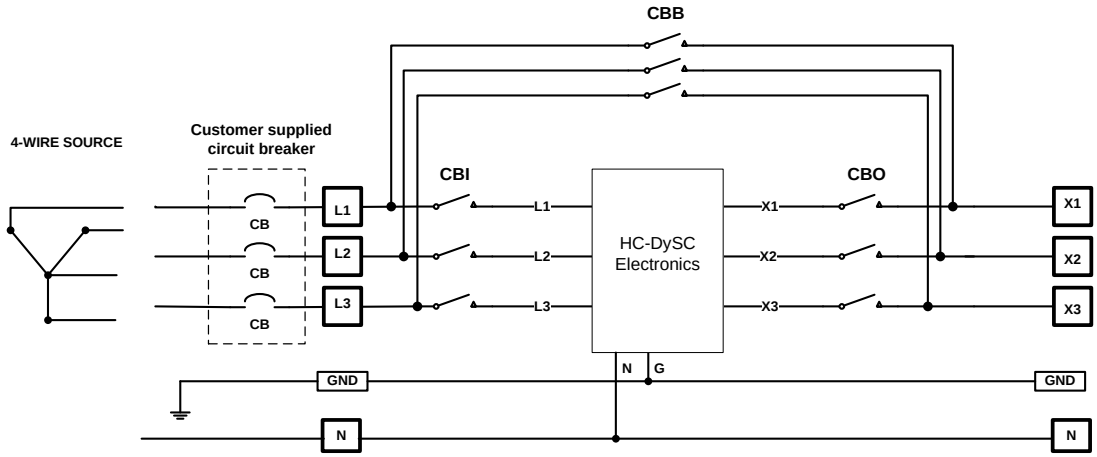

Electrical Terminations and Ratings

Input connections are marked L1, L2, and L3 for the source connections. Output connections are marked X1, X2, and X3 for the load connections (See Figure 5). In 4-wire models only, connect both input and output N conductors to the neutral bus bar. Do not connect to the neutral bus bar in 3-wire models. Replace all shields and covers when wiring is completed. The doors must be closed and latched securely.

Figure 5 - Electrical Terminations

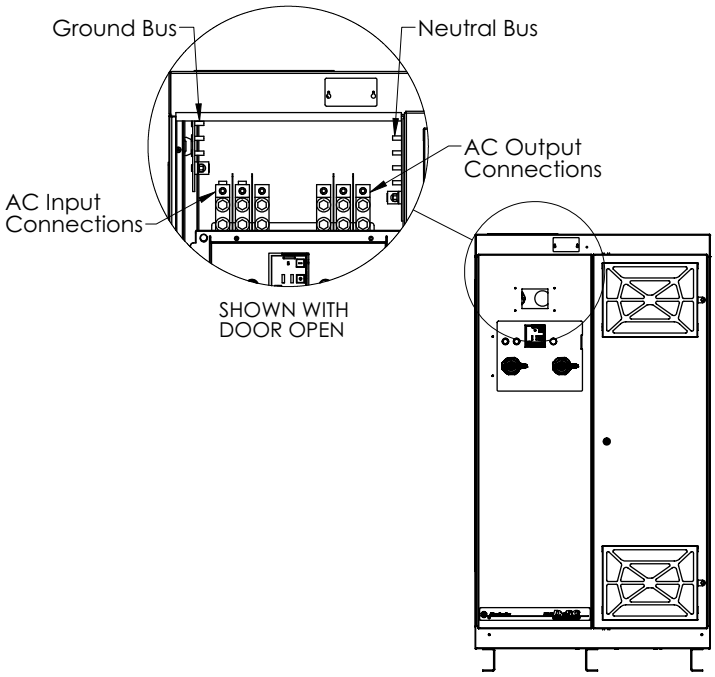

- Input/Output mechanical lugs accept AWG 6 to 350 kcmil [16 to 150 mm^2] conductors. Tighten lugs to 275 lb-in [31 N-m]. Lugs require 5/16″ hex key tool for installation.
- Input/Output mechanical lugs may be removed and replaced with pressure (crimp) lugs. Two 1/2″ holes (1.75″ spacing) are provided.
- NEUTRAL Bus and Ground Bus are provided with 3/8″-16 threaded studs (9.525mm diameter). Tighten nuts to 25 lb-ft (300 lb-in) [33.9 N-m].

ATTENTION: The HC-DySC corrector must be safety-grounded according to the National Electrical Code. In addition, all local, state, and federal regulations applicable to the installation of electrical systems and accident prevention regulations must be strictly observed.

Communications

Both dry contacts (relays) that indicate status and a Serial Communications Port (RS-232) are available for monitoring the HC-DySC voltage sag corrector.

Dry Contacts

Three relay contacts indicate status. The contacts are form A and close upon occurrence of the named event: (a) any SAG EVENT, when rms input voltage drops below 88.5% of rated value; (b) OUTPUT OK, when output voltage remains between 87% and 110%; and (c) a system ALARM event. The relay contact ratings are 24V at 1A.

For access, remove the small metal cover from the top of the enclosure. (See Figure 6)

- All wiring is to be Class 2, limited to 24 Volts, AC or DC.
- Acceptable wire gauges range from 24 AWG...12 AWG (0.205...2.5mm^2).
- Torque connections to 5.0 lb•in (0.6 N•m).
- For permanent installation of communications conductors, a standard conduit knockout is located on the cabinet top (See Figure 2).

Figure 6 - Access Cover Location

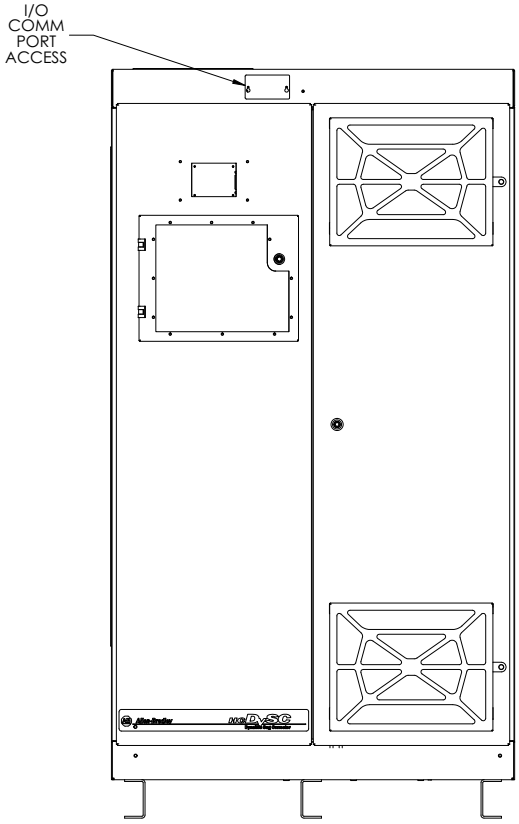

Serial Communications Port

The serial port is a DE-9 female connector. The pinout follows standard RS-232 protocol: pin 2 is RxD, pin 3 is TxD and pin 5 is common (return). All other pins are unused. Contacts are galvanically isolated from the system power and grounds.

- Protection: The RS-232 port is ESD-protected to 15kV.
- Protocol: 57.6k bps, 8 data bits, one stop bit, no parity, flow control off
- Data packets are SLIP encoded (with 2 byte length field).
- Data accessible through this port includes load voltages, load currents, status, and event and diagnostic logs.
- Consult Rockwell Automation technical support for specifications to the SLIP protocol.

Figure 7 - Serial Communications Port

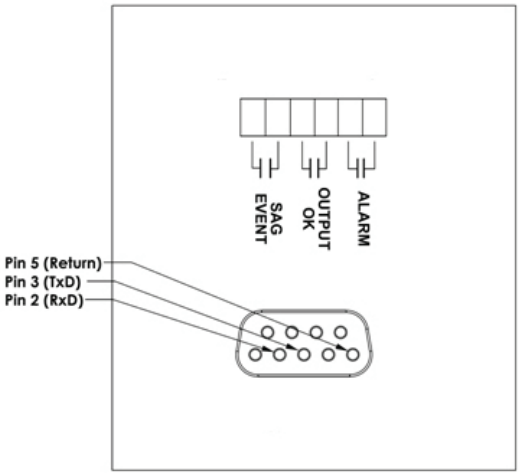

Applying Power and Operation

Applying Power

1. Before applying power, make certain there are no metal filings or any conductive debris in or on any components inside the cabinet.
2. Verify the voltage sag corrector unit voltage rating matches AC source voltage.
3. Verify all input/output wiring including grounding has been completed and properly tightened.
4. Replace all covers. Close all cabinet doors.
5. Put CBI circuit breaker and CBO circuit breaker in the OFF position. CBB circuit breaker closes automatically when upstream power is applied.
6. Apply power from the upstream branch protection device. Power flows directly to the load through the CBB circuit breaker. The touch screen becomes active and displays "System Offline" in the upper left corner.
7. Verify output (load) voltage is present.
8. Wait for "READY TO CLOSE CBI" to display in the upper left corner of the touch screen. Rotate CBI circuit breaker to the ON position. The electronics become energized in this mode but the load is still powered through the CBB circuit breaker.
9. Verify that the touch screen displays "OK" in the upper left corner, with a bar above that states "Sag Prot. Bypassed." Verify that the voltage, current, and frequency readings in the status display are correct.
10. If a "Critical" or "Fatal" system event appears on the touch screen,(1) rotate CBI circuit breaker to the off position (2) call for technical support.
11. Rotate CBO circuit breaker to the ON position. Press the red "CBB OFF" push button. Verify that the red "CBB CLOSED" lamp is off. The load is now being protected. The display shows "OK" in the upper left corner.

IMPORTANT Always use red "CBB OFF" push button to open the CBB circuit breaker. Do not use the red "Push OFF" button that is part of the CBB circuit breaker. For proper operation of the HC-DySC corrector, the CBB circuit breaker spring must be charged (displays "Charged Spring") when the CBB circuit breaker is off. If the CBB circuit breaker is off and displays "Discharged Spring", push the "CBB OFF" push button to charge the spring.

IMPORTANT NOTICE: If the HC-DySC corrector input power is cycled in the sequence OFF--ON--OFF--ON within one minute, a “Limit Cycle Timeout” alarm. In such case sag correction will be inhibited for one minute, after which the alarm will automatically reset.

System Operation

SHOCK HAZARD: Dangerous voltages are present within the HC-DySC corrector. The unit should never be operated with the enclosure door open except by qualified and authorized personnel who are trained and familiar with the operation of the unit and the location of components and voltages. Failure to comply with this warning could result in injury or death.

System Description

The HC-DySC corrector consists of the DySC dynamic voltage sag correction electronics together with an integral maintenance bypass switch. In the Normal mode of operation the raw utility power is routed through the DySC electronics to protect the loads from voltage sags and momentary interruptions. Figure 8 shows a simplified one-line diagram for the system. Neutral and Ground connections are passed straight through to the loads.

Figure 8 - One Line Diagram of the HC-DySC corrector

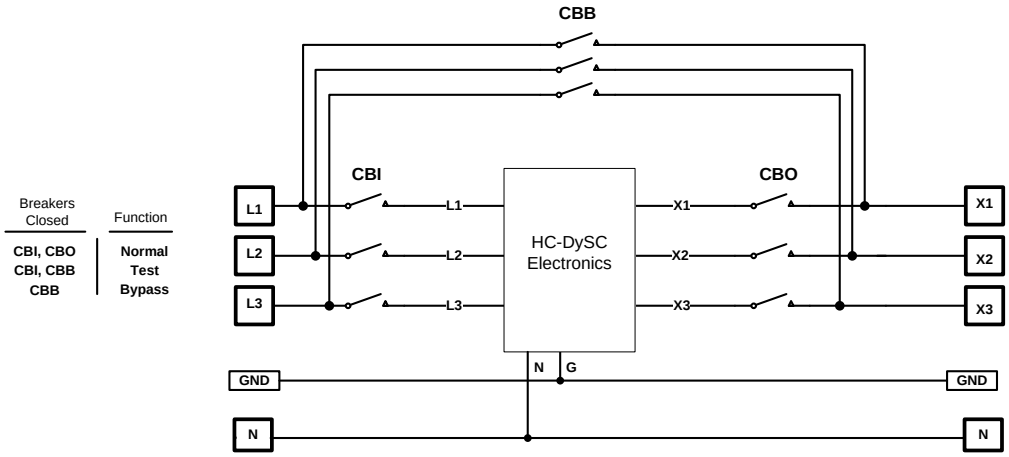

Maintenance Bypass Operation

The HC-DySC corrector has an integral maintenance bypass switch. The maintenance bypass switch is used to avoid power interruptions to the critical loads during maintenance or service. The maintenance bypass switch consists of a bypass circuit breaker (CBB), an input circuit breaker (CBI), and an output circuit breaker (CBO). Under normal operating conditions raw input power is routed through CBI to the input of the HC-DySC corrector. The output is routed to the load through CBO. CBB is normally open. CBB connects utility power directly to the load, bypassing the HC-DySC corrector, when operating in the Maintenance Bypass mode.

SHOCK HAZARD: Dangerous voltages can still exist within the enclosure even if the system is in Bypass mode. Refer servicing to qualified personnel.

Bypass Switch Modes

The maintenance bypass switch has three modes of operation: Normal mode, Bypass mode, and Test mode. It is configured as shown in Figure 9.

Normal Mode

The Normal mode is the input circuit breaker (CBI) and the output circuit breaker (CBO) closed. The bypass circuit breaker (CBB) must be open or the HC-DySC corrector will not be able to correct voltage sags. There is a red indicator light on the enclosure that is lighted when the bypass circuit breaker is closed. The green "OK" status box should be shown on the touchscreen display. The green "OK" box indicates that the voltage at the output of the HC-DySC corrector is within the +10%, -13% normal window. Refer toTable 2 for operational conditions and indications

Bypass Mode

The Bypass mode for the HC-DySC corrector is for the input circuit breaker (CBI) and the output circuit breaker (CBO) to be open. The bypass circuit breaker (CBB) must be closed to provide power to the load while the HC-DySC corrector is being serviced.

Refer to Maintenance Bypass Transfer Procedure on page 20 for instructions on transferring the system into and out of bypass mode.

Figure 9 - Maintenance Bypass Switch Configuration

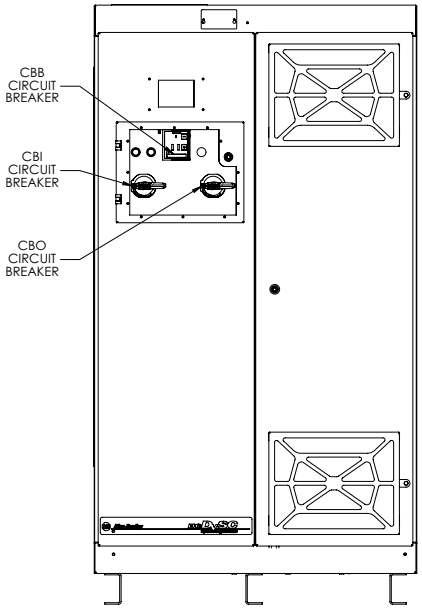

ATTENTION: Servicing must only be performed by factory authorized and qualified personnel

Test Mode

The TEST mode is for the input circuit breaker (CBI) to be closed and the output circuit breaker (CBO) to be open. The bypass circuit breaker (CBB) must be closed to provide power to the load while the HC-DySC corrector is being tested off-line.

ATTENTION: Testing must only be performed by factory authorized and qualified personnel

Maintenance Bypass Transfer Procedure

Automatic System

In the event of a fault in the HC-DySC corrector, bypass circuit breaker (CBB) will close. The system will remain in Bypass mode until manually transferred back to Normal mode.

Manual Transfer to Normal (Sag Protection)

1. Wait for HC-DySC corrector to display "READY TO CLOSE CBI".
2. Close CBI using the manual operator (Reset if needed).
3. Verify HC-DySC corrector displays “OK”.
4. Close CBO using the manual operator (Reset if needed).
5. Press “CBB OFF” button to open CBB. Red “CBB CLOSED” lamp should be off.
6. Sag protection is now active.

Manual Transfer to Maintenance Bypass

1. Press "CBB ON" pushbutton to close CBB. Red "CBB CLOSED" lamp should be on.
2. Open CBO using the manual operator.
3. Open CBI using the manual operator.
4. Sag protection is now bypassed.

IMPORTANT Always use red "CBB OFF" pushbutton to open the CBB circuit breaker. Do not use the red "Push OFF" button that is part of the CBB circuit breaker. For proper operation, the CBB circuit breaker spring must be charged (displays "Charged Spring") when the CBB circuit breaker is off. If the CBB circuit breaker is off and displays "Discharged Spring", push the "CBB OFF" pushbutton to charge the spring.

Operation

The HC-DySC corrector contains three power electronics modules (one module per phase) and controls that continuously monitor the line voltage. The modules are series-connected to the input line, and operate by adding the compensating voltage needed to restore the line to its nominal output. When the utility line voltage is within normal range the ac static switch components remain closed and no compensating voltage is added. When an insufficient line voltage event occurs, the static switches open and the sag-correcting electronics quickly add the balance of voltage necessary to regulate the load voltage.

The HC-DySC corrector accepts line input power over 3 wires into terminals L1, L2, L3 and provides sag compensated three-phase output power at terminals X1, X2, and X3 when not in the Maintenance Bypass mode. In 4-wire systems the input Neutral is connected directly to the output Neutral terminal.

A touchscreen display provides indication of the status of the HC-DySC corrector operation. After power is switched on, the green "OK" box will be displayed in the upper left hand corner of the display, indicating that the output voltage is within a normal range of -13% to +10% of nominal.

A red "FAULT" box is displayed in the upper left hand corner of the display when a fault condition is present. During this period sag correction is disabled and the HC-DySC corrector will continue to bypass the utility voltage directly to the load through the static bypass path. An orange "FAULT OVER" box is displayed when the previous fault condition has cleared. Sag correction will remain inhibited until the reset period has expired (approximately 1 minute). A blue "SYSTEM OFFLINE" box is displayed whenever the HC-DySC corrector is in the Maintenance Bypass mode (CBB closed and CBI open).

A list of conditions and indications is given in Table 2. Under some conditions the HC-DySC corrector will automatically close the maintenance bypass switch (CBB) and open CBI and CBO to prevent damage to the HC-DySC corrector or to protect loads from severe voltage unbalance. Those conditions are the last four listed in the table below. Refer to Chapter 5 for further information on system alarms and status display.

Table 2 - Operational Conditions and Indications

CONDITION	DEFINITION	DISPLAY STATUS*	INVERTER	MODE
Normal:	88.5% < V_{LINE} < 110%	Green "OK"	Standby	Static BP
Sag Event:	V_{LINE} < 88.5% for less than specified runtime	Green "OK"	Running	Inverter
Runtime Exceeded:	Cumulative runtime exceeded	Blinks Red, then Orange for 1 min. Repeats if condition persists	Inhibited	Static BP
Normal Mode, Overload:	Load current > 110%	Red during OL condition, Orange for 1 min. after OL ends	Inhibited	Static BP
Output Over-Current while inverter running (I2t)	Load current > 150% for 3 cycles	Blinks Red, then Orange for 1 min. Repeats if condition persists	Inhibited	Static BP
Inverter Module Over-temperature:	Module temperature limit exceeded	Blue, HC-DySC offline	Disconnected	Mechanical Bypass
HC-DySC cabinet Over-temperature:	Internal temperature limit exceeded	Blue, HC-DySC offline	Disconnected	Mechanical Bypass
Static Switch Failure:	Open SCR(s)	Blue, HC-DySC offline	Disconnected	Mechanical Bypass
Main Fuse Open	Open Fuse(s)	Blue, HC-DySC offline	Disconnected	Mechanical Bypass

* The touchscreen will power down if both input and output voltages fall below 75% of nominal. An error message will be displayed while the red or orange text box is displayed. Refer to Chapter 5 for further information on accessing fault codes and status history.

Display Screen

Overview

The HC-DySC touch screen display is a window to voltage sags and HC-DySC protection. The display provides system status, voltage sag notification and history, runtime statistics and system history in a simple and intuitive touch-based user interface.

At startup, a welcome screen displaying the HC-DySC logo appears. This screen disappears after 5 seconds, when the "Home" screen appears.

Note: The touch screen is optimized for use with a plastic stylus or bare finger.

At installation time perform the following steps to configure your system:

Step 1: Press the "CONFIG" button at the bottom of the "HOME" screen (See Figure 10).

Figure 10 - Home Screen

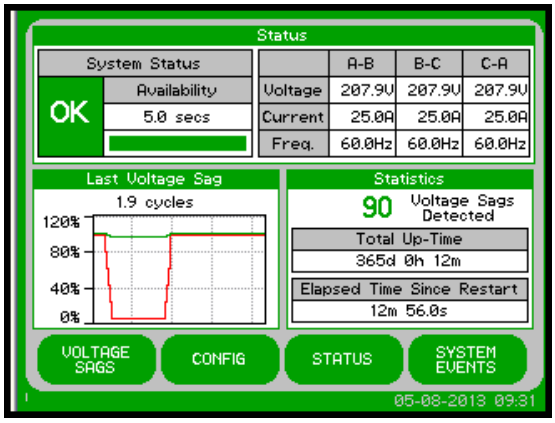

Step 2: Begin calibration by pressing "CALIBRATE TOUCH SENSOR" (See Figure 11).

Figure 11 - System Configuration

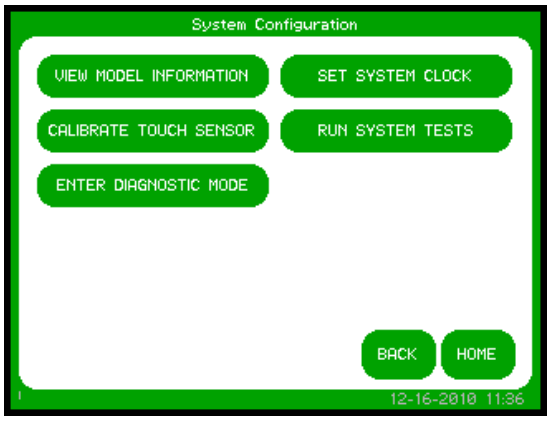

Note: To recalibrate from any screen, hold anywhere on the screen for 10 seconds. You will see a small progress bar at the bottom of the screen. When the progress bar reaches 100 percent, the calibration screen will open.

Step 3: The "Touch Screen Calibration" screen will then appear (See Figure 12). Press and hold on the center of the touch target, release when the touch target begins to flash. Repeat with the next two touch targets.

Step 4: The screen uses the new calibration configuration. You can test the calibration before saving by pressing anywhere on the screen to ensure the touch target appears where you press. After testing, press the "SAVE" button. Press the "BACK" button to return to the "System Configuration" screen.

Figure 12 - Touch Screen Calibration

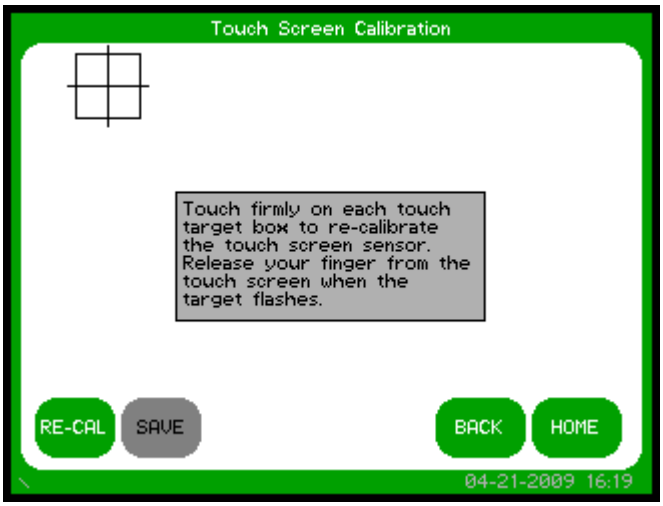

Step 5: Set date and time by pressing "SET SYSTEM CLOCK" in "System Configuration." Press "SAVE" when completed.

Figure 13 - Set System Date and Time

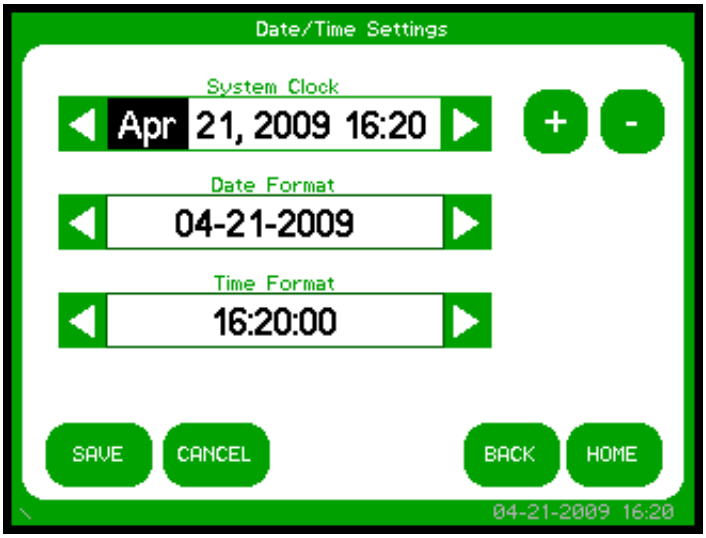

Home Screen

The "HOME" screen of the display provides a snapshot view of the status of the entire system (See Figure 14). You can return to this screen from any other screen by pressing the "HOME" button. After 5 minutes of inactivity (i.e. not pressing the screen), the touch screen will automatically return to the "HOME" screen. The "HOME" screen is divided into four main areas described in Table 3.

Figure 14 - Home Screen

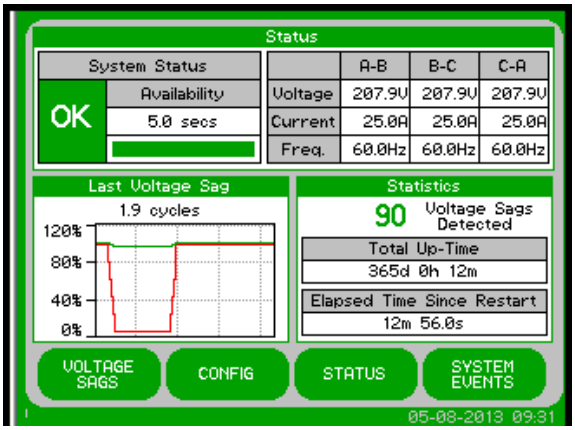

Table 3 - Home Screen Description

Description	Function	
Status	Real-time system operation: available runtime, output line-to-neutral (L-N) or line-to-line (L-L) voltage (model dependent), load current, and frequency	
Last Voltage Sag	Rotating information about the last voltage sag: event start time, event duration, and sag depth	
Statistics	Summary view of HC-DySC performance based on sags detected, plus a rotating display of last power-up date, elapsed time (since power up), and total up-time	
Main Menu	The menu buttons at the bottom of the screen navigate through: **VOLTAGE SAGS:** Displays the "Voltage Sag Log" screen **CONFIG:** Displays the "System Configuration" screen	**STATUS:** Displays the "System Status" screen **SYSTEM EVENTS:** Displays the "System Event Log" screen

Mechanical Bypass

Some systems equipped with a mechanical bypass display the bypass status in the System Status panel on the Home Screen. When the mechanical bypass is closed, the DySC unit is bypassed and voltage sags on the line will NOT be corrected.

Figure 15 - Home Screen Mechanical Bypass

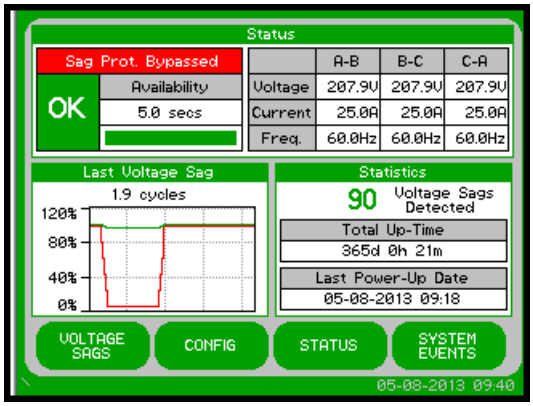

System Status

The “System Status” screen displays the real-time overall system status. Reach this screen by pressing “STATUS” on the “HOME” screen or the “Status” area at the top of the “HOME” screen

Figure 16 - System Status Summary

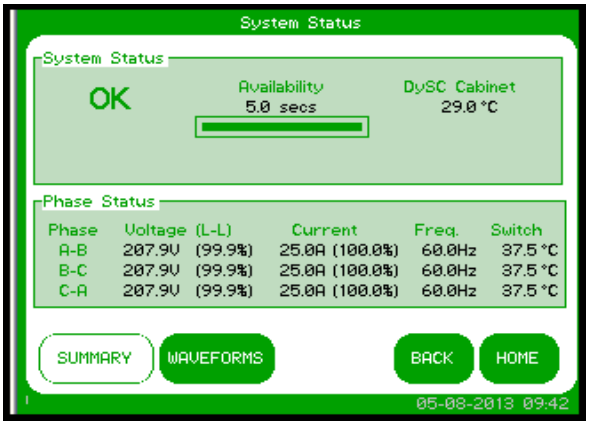

Figure 17 - - System Status Waveforms

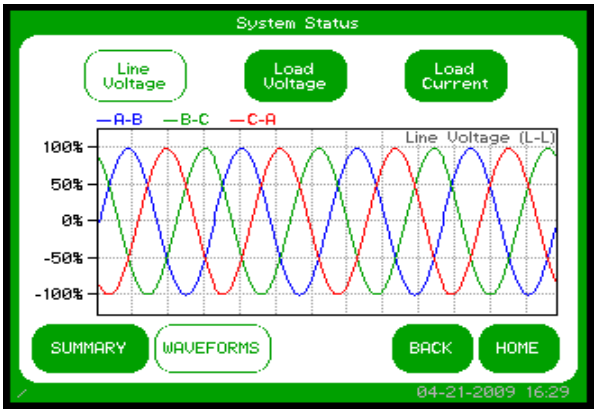

Table 4 - System Status Description

Description	Function
System Status	Overall system status including current operational status, availability to correct sags, and internal cabinet temperature
Phase Status	Voltage, current, frequency, and static switch temperature are displayed for all phases. The percentage displayed following the voltage and current is the percent of nominal value for the HC-DySC corrector. Nominal values are listed on the “View Model Information” screen.
Waveforms	A sample of a 4 cycle waveform that includes real-time line voltage, load voltage, or load current can be selected for display

Mechanical Bypass

Some systems equipped with a mechanical bypass will display the bypass status in the System Status panel on the Status Screen. When the mechanical bypass is closed, the DySC unit is bypassed and voltage sags on the line will NOT be corrected.

Figure 18 - Status Screen Bypass Status

Voltage Sag Events

A voltage sag is defined as the period when input RMS voltage drops to less than 88.5% of the rated DySC voltage. Details of each voltage sag and corresponding HC-DySC protection are captured and saved to the voltage sag log.

Voltage Sag Log

The "Voltage Sag Log" screen (See Figure 19) displays a list of the last 61 voltage sags. Reach this screen by pressing "VOLTAGE SAGS" button on the "HOME" screen.

Figure 19 - Voltage Sag Log

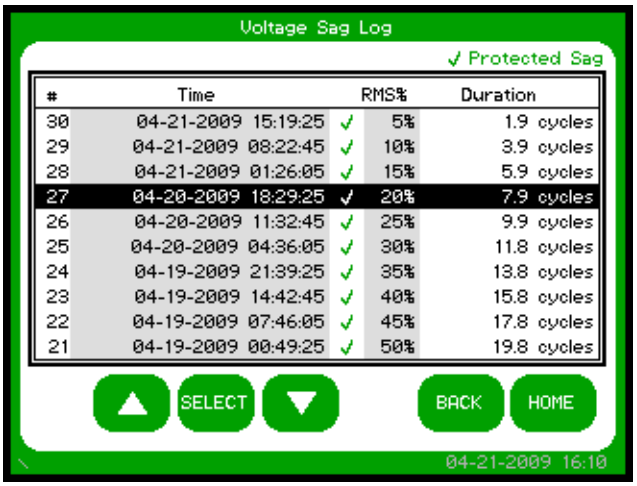

Table 5 - Voltage Sag Log Description

Description	Function
#	Unique ID within the list (0-60) to identify the voltage sag
Time	Start time and date of the voltage sag
Check Mark	Denotes the HC-DySC corrector protected the voltage sag
RMS%	Worst-case RMS voltage (percent of nominal) across all phases
Duration	Duration of the voltage sag

Note: Use the up/down arrows to navigate through the list. Press the "SELECT" button to view additional details about the voltage sag.

Voltage Sag Detail

Voltage Sag Detail screen (See Figure 20) displays all information related to the selected event. Details for the most recent sag event can also be accessed by pressing anywhere in the Last Voltage Sag area of the HOME screen.

The worst-case RMS voltage recorded during the event is displayed in the upper window along with the corresponding voltage percentage and the event duration. Table 6 describes the remaining screen content.

Figure 20 - Voltage Sag Detail

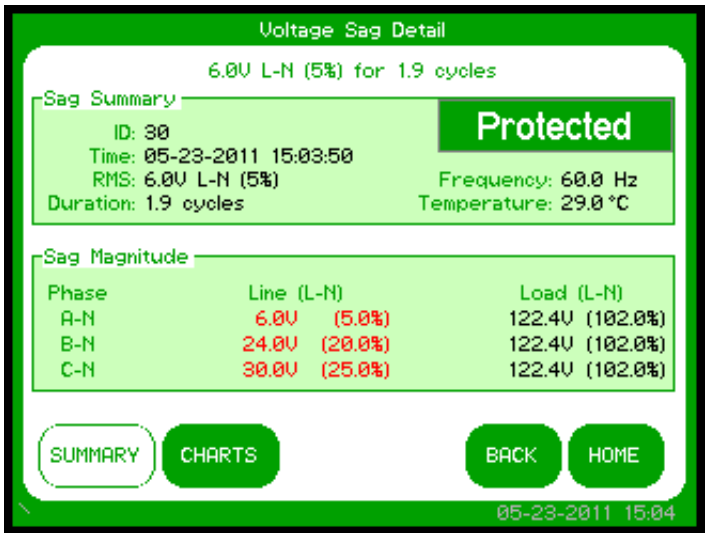

Table 6 - Voltage Sag Detail [(1)]Description

Description	Function
Sag Summary	**ID**: Unique ID within the list (0-60) to identify the voltage sag **Time:** Start time of the voltage sag **RMS:** Worst-case RMS voltage (L-N) and percent of rated voltage across all phases **Duration:** Duration of the voltage sag **Frequency:** Frequency of the line prior to the start of the voltage sag **Temperature:** Internal temperature of the HC-DySC corrector prior to the start of the voltage sag
Sag Magnitude	**Line Voltage:** Line RMS voltage and percent of rated (L-N). Voltages ≤ 80% of nominal are displayed in red. **Load Voltage**: Load RMS voltage and percent of nominal (L-N).
Correction Result	The "Correction Result" is displayed in a box in the upper-right-hand corner of the "Event Summary" section. The "Correction Result" conveys how the HC-DySC corrector performed correcting the voltage sag. The possible values are: **Protected**: The output RMS voltage on all phases is ≥ 85 percent of nominal and the HC-DySC correction was active for the duration of the voltage sag (will be displayed in green). **Run Error**: An unexpected system event occurred during the sag (will be displayed in orange) **Run Inhibite**d: The HC-DySC corrector was inhibited when the sag occurred (will be displayed in orange).

(1) The "Voltage Sag Detail" for the most recent event can also be accessed by pressing the "Last Voltage Sag" area of the "HOME" screen.

RMS Voltage Charts

The line and load RMS voltage (L-N) of each phase is recorded for 8 cycles prior to the start of the voltage sag followed by the first 300 cycles of the voltage sag (See Figure 21). Reach this screen by pressing "CHARTS" on the "Voltage Sag Detail" screen as shown in Figure 20 on page 28.

Figure 21 - RMS Voltage Charts

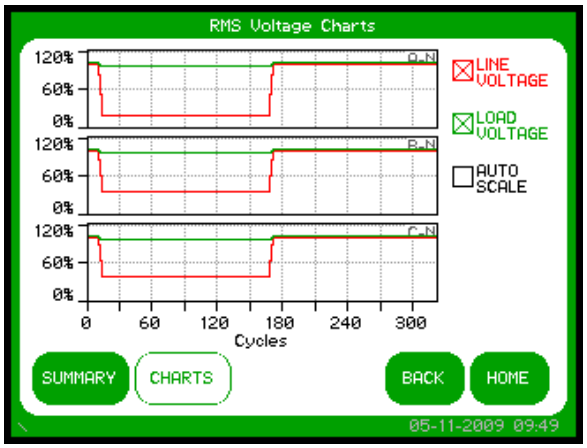

Line voltage is shown in red and load voltage is shown in green. By pressing the check boxes in the right column, you can toggle each data series Off and On as well as enable y-axis auto-scaling.

Note: 300 cycles = 5.0 seconds at 60 Hz or 6 seconds at 50 Hz.

Voltage Sag Notification

While the voltage sag is in-progress, a flashing red box in the upper left-hand corner will display "SAG-IN-PROGRESS." This box will appear on every screen until the voltage sag ends. See Figure 22.

Figure 22 - Voltage Sag Detected

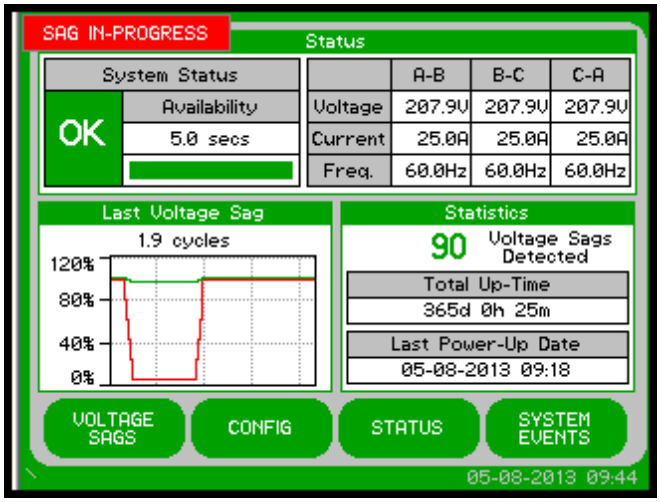

System Events

The HC-DySC corrector tracks all operational events which are classified into five groups based on severity.

Table 7 - System Event Description

Description	Function
Informational	Purely informational. No action is required.
Auto-Resetting	The HC-DySC corrector will reset within 60 seconds. No user action is required.
User Attention	User action may be required to correct a problem. The HC-DySC corrector will reset 60 seconds after the error condition is corrected.
Manual-Reset	For system events that cause circuit breaker CBI to open a manual reset of the DySC system will be required.
Call Service	For events classified as Call Service, factory trained service support will be required. Contact Rockwell Automation technical support.

System Event Log

The "System Event Log" screen displays a list of the last 40 system events in chronological order (See Figure 23). Reach this screen by pressing "SYSTEM EVENTS" on the "HOME" screen.

Figure 23 - System Event Log

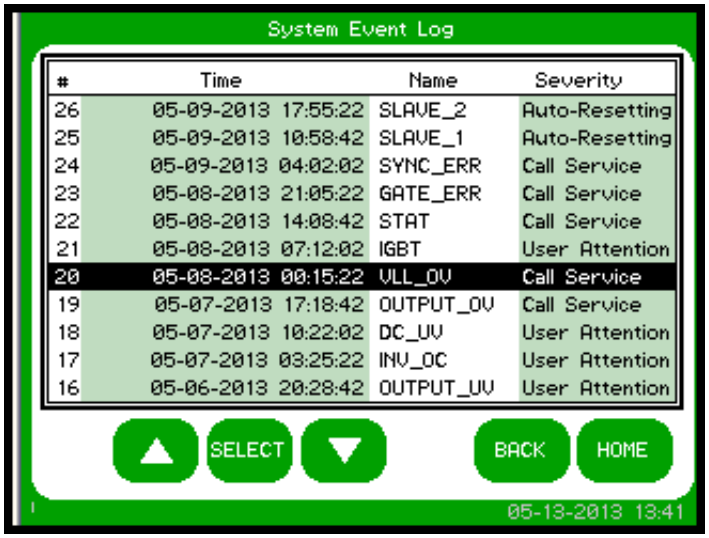

Table 8 - System Event Log Description

Description	Function
#	Unique ID (0-39) to identify the system event (unique within the list)
Time	Start time of the system event
Name	Short name of the system event.
Severity	Severity of the system event

Note: Use the up/down arrows to navigate through the list. Press the "SELECT" button to view additional detail about the system event.

System Event Detail

The "System Event Detail" screen is displayed when a specific system event is selected by pressing on the "SELECT" button on the "SYSTEM EVENT LOG" screen (See Figure 23 on page 30). It provides detailed information that was recorded during the event (See Figure 24).

Figure 24 - System Event Detail

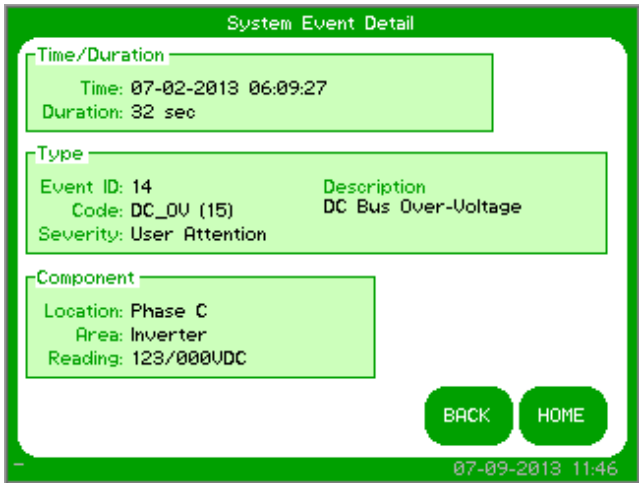

Table 9 - System Event Detail

Description	Function
Time/Duration	**Time:** Date and start time of the system event **Duration:** The amount of time the event lasted.
Type	**Event ID:** Unique ID within the list (0-39) to identify the event. **Code:** Abbreviation of the event followed by a numeric event code in parentheses. (For a list of codes and abbreviations see Table 11 on page 36 **Severity:** Severity of the event **Description:** Name of the event see Table 11 on page 36
Component	**Location:** The location in the system where the event originated (i.e. Phase A, Phase B, Phase C, etc.). **Area:** The specific area within the location where the event originated (i.e. Inverter, etc.). **Reading:** a data value relevant to the System Event may be recorded in some cases, e.g., detail for an "Inverter Over-Current" alarm would include a reading of the causal high current value. The reading "N.A." is displayed if no appropriate data value exists.

System Event Notification

When the HC-DySC corrector first detects an event condition, the "System Fault Detection" dialog box will be displayed (See Figure 25). Within the "System Fault Detection" box, the name, severity, and location of the event will be displayed.

Figure 25 - System Fault Detection

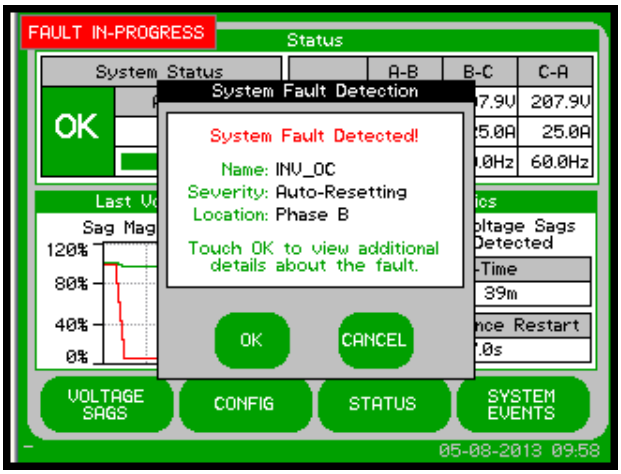

Pressing the "OK" button will open the "System Event Detail" screen. The event will appear in the event list after the event is over. The window can be closed by pressing the "CANCEL" button or waiting 15 seconds.

When the event condition clears, a new dialog box will be displayed. Press "OK" to view the complete event detail, or "CANCEL" to close the dialog box (See Figure 26).

Figure 26 - System Fault Detection - Cleared

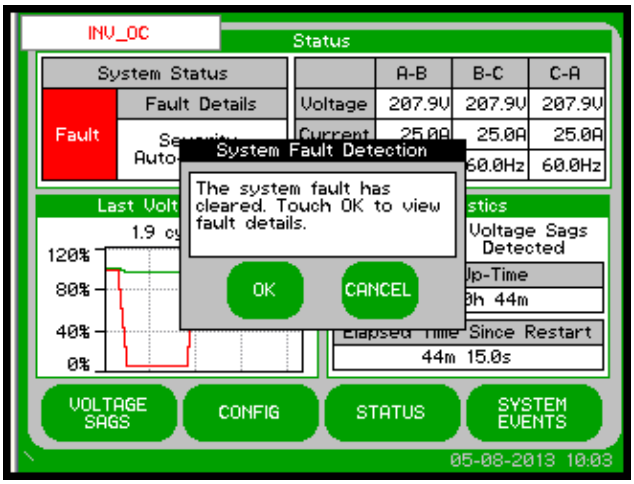

If a "Call Service" severity event is detected, record the event details including: name, description, location, and reading. Contact product support immediately. If the event clears, the touch screen will automatically go back to normal operation.

System Configuration

Press the "CONFIG" button at the bottom of the "HOME" screen to enter the "System Configuration" screen (See Figure 27). The "SET SYSTEM CLOCK" and "CALIBRATE TOUCH SENSOR" functions are described at the start of this chapter.

Figure 27 - System Configuration

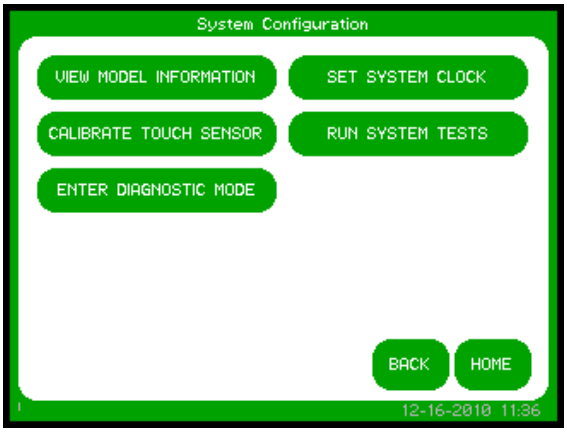

Model Information

Touch "VIEW MODEL INFORMATION" to go to the "Model Information" screen. (See Figure 28).

Figure 28 - Model Information

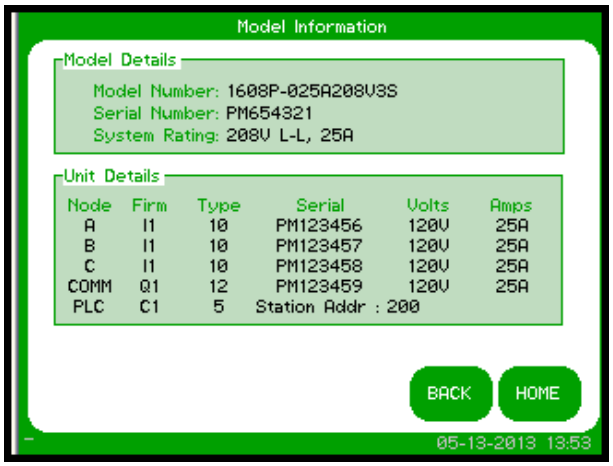

Table 10 - Model Information

Description	Function
Model Details	**Model Number:** System Model number **Serial Number:** System serial number **System Rating:** System voltage and current ratings
Unit Details	**Node:** The location index for the details listed to the right **Firm:** The firmware version for the location indexed. **Type:** Unique code specifying firmware part number for the location indexed. **Serial:** The serial number for the location indexed **Volts:** The rated voltage for the locations **Amps:** The rated current for the location indexed

Run System Tests

Press the “RUN SYSTEM TESTS” to enter the “System Tests” screen. Press “2 MINS” to run the system fans for 2 minutes (See Figure 29).

Figure 29 - System Tests

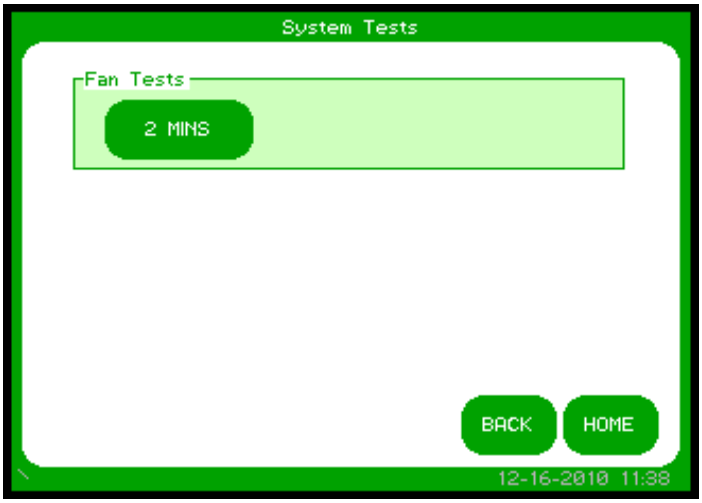

Diagnostics Mode

This is not a user function. It is numerical code protected for authorized service personnel.

Maintenance

Preventative Maintenance

The HC-DySC corrector requires very little preventative maintenance The corrector should be checked periodically for proper air flow and status indicator operation.

Monthly Checks

- Ensure the touch screen display is working and no active events are displayed.
- Verify that the maintenance bypass switch is in the NORMAL mode.
- Update system time, if needed, Figure 13 on page 24.
- Use a soft cloth to clean the touch display. DO NOT USE harsh detergent, abrasive sponges, alcohol, ammonia, toluene, or acetone on the touch display.
- Ensure air intake and exhaust filters are not covered or obstructed.

3-6 Month Checks

- Check air filters and clean when necessary.
  - Air filters require periodic cleaning, with the frequency depending on the environment. Filters are located on the front sider and can be accessed with the door closed. Power does not need to be shut off to clean the filter.
  - To remove the grill covers unscrew the captive screw, slide the frame up, then lift off. The washable foam filter pads are behind the grill cover. Gently wash the foam filter pads as needed with a light non-abrasive soap and water mixture. Towel-dry; do not wring-out.
  - Place the filter and grill cover back into their location and tighten the captive screw.
  - Replace filter if damaged. Consult Rockwell Automation technical support for replacement filters. Replacement filters must be no more restrictive to air flow than the original equipment filters.
- Check fan for proper operation.
  - Tap on “CONFIG” on the touch screen display. Tap on “Run System Test”. This will bring up a “System Test” screen to test the fans. After tapping the “Fan Test” button, you should hear the fans run for two minutes.

12 Month Check

- Transfer the HC-DySC corrector to Bypass mode, then back to Normal mode to exercise the circuit breakers in the maintenance bypass switch.

Table 11 - System Event Table

Event Code	Code Name	Full Name	Severity	Area	Event Description	Event Resolution
1	POWER_ON	DySC Power On	Informational	Unit	Power re-applied to the DySC.	No action needed.
4	T_FAN_ST	Fan Test Start	Informational	Unit	Start acknowledgment of DySC fan test.	No action needed.
5	T_IN_ST_1	Inverter Test (.5 cycles) Start	Informational	Unit	Start acknowledgment of DySC 0.5 cycle inverter test.	No action needed.
6	T_IN_ST_2	Inverter Test (3 cycles) Start	Informational	Unit	Start acknowledgment of DySC 3 cycle inverter test.	No action needed.
7	T_IN_ST_3	Inverter Test (5.5 seconds) Start	Informational	Unit	Start acknowledgment of DySC 5.5 second inverter test.	No action needed.
9	EXTERNAL	External Inhibit	Auto-Resetting	Inverter	Controller is inhibited by another phase controller.	Review event details from other phase controllers.
11	RUN_TO	Inverter Run Time out	Auto-Resetting	Inverter	DySC inverter had a total cumulative runtime of more than rated.	No action needed.
12	LIM_CYCLE	Inverter Limit Cycle Timeout	Auto-Resetting	Inverter	Power was re-applied more than once within a 58 second period.	No action needed.
13	STAT_OT	Static Switch Over-Temperature	User Attention	Static Switch	Static switch heatsink temperature was greater than maximum rating.	Verify ambient temperature is within DySC specification. Check for damaged fans. Check for dirty or obstructed air filters.
14	OVERLOAD	Overload	User Attention	Unit	Inverter inhibited because load current exceeded maximum rating.	Reduce load. In parallel DySC systems, verify proper current sharing among slave cabinets.
15	DC_OV	DC Bus Over-Voltage	User Attention	Inverter	Positive or negative half of DC bus voltage exceeded maximum rating.	Verify line voltage is within ratings. Verify proper DySC application. Call service.
16	CNTRL_UV	Controller Power Under-Voltage	User Attention	Inverter	DySC control power supply is out of tolerance.	Verify DySC is online and line voltage is within ratings. Call service.
17	OUTPUT_UV	Output Under-Voltage	User Attention	Inverter	DySC output voltage was less than 80% of nominal during sag correction. Sag condition likely outside of DySC specification.	Verify line voltage is within ratings. Verify proper DySC application.
18	INV_OC	Inverter Over-Current	User Attention	Inverter	Inverter current exceeded maximum rating during sag correction.	Verify load current is within ratings. Verify mechanical bypass switch is open. Verify proper DySC application.
19	DC_UV	DC Bus Under-Voltage	User Attention	Inverter	DC bus voltage below operational range.	Verify line voltage is within ratings. Call service.
20	OUTPUT_OV	Output Over-Voltage	Call Service	Inverter	DySC output voltage was greater than 115% of nominal during sag correction.	Call service.
25	SYNC_ERR	Line Synchronization Error	Call Service	Inverter	Inverter not synchronized to line when sag detected.	Call service.
31	CONFIG	Configuration Alert	Call Service	Inverter	Controller configuration has changed.	Call service.
32	CNTRL_MEM	Controller Memory Busy	Auto-Resetting	Inverter	Controller is loading new data into Flash memory.	No action needed.
33	UNBALANCE	Start-Up Test: DC Bus Unbalance	Call Service	Inverter	Positive and negative halves of the DC bus did not charge equally during power up.	Call service.
34	AC_V_CHK	Start-Up Test: AC Voltage Check	Call Service	Inverter	Output voltage was detected out of tolerance during the start-up test.	Call service.
35	ROLL_CALL	Start-Up Test: Controller Roll Call Timeout	Call Service	Unit	Controller communication problem detected during start-up test.	Call service.

Event Code	Code Name	Full Name	Severity	Area	Event Description	Event Resolution
36	COM_VER	Start-Up Test: Communication Compatibility Mismatch	Call Service	Unit	Firmware communication compatibility problem detected during start-up test.	Call service.
37	CNFG_TO	Start-Up Test: Controller Configuration Timeout	Call Service	Unit	Controller communication problem detected during start-up test.	Call service.
38	CNFG_ERR	Start-Up Test: Controller Configuration Mismatch	Call Service	Unit	Controller firmware configuration problem detected during start-up test.	Call service.
39	FIRM_TO	Start-Up Test: Controller Firmware Check Timeout	Call Service	Unit	Controller communication problem detected during start-up test.	Call service.
40	FIRM_DIFF	Start-Up Test: Controller Firmware Revision Mismatch	Call Service	Unit	Controller firmware revision mismatch detected during start-up test.	Call service.
41	SRL_TO	Start-Up Test: Controller Serial Number Check Timeout	Call Service	Unit	Controller communication problem detected during start-up test.	Call service.
42	SRL_DIFF	Start-Up Test: Serial Number Mismatch	Informational	Unit	Controller serial number mismatch detected during start-up test.	No action needed.
44	T_INV_TO	Inverter Test Timeout	Call Service	Unit	Phase control board failed to respond to Comm board's Inverter test.	Call service.
47	CRIT_OT	Critical Over-Temperature	Manual Reset	Unit	Internal DySC temperature exceeded maximum rating. Mechanical bypass commanded.	Verify ambient temperature is within DySC specification. Check for damaged fans. Check for dirty or obstructed air filters. Manually reset DySC.
48	FUSE_OPEN	Fuse Open	Call Service	Unit	One of the DySC fuses was detected open. Mechanical bypass commanded.	Call service.
49	OPEN_SCR_A	Open SCR Phase A	Call Service	Static Switch	The SCR on the phase A module was detected open.	Call service.
50	OPEN_SCR_B	Open SCR Phase B	Call Service	Static Switch	The SCR on the phase B module was detected open.	Call service.
51	OPEN_SCR_C	Open SCR Phase C	Call Service	Static Switch	The SCR on the phase C module was detected open.	Call service.
53	DYN_BRAKE	Dynamic Brake Error	Call Service	Unit	A problem was detected with the DySC dynamic brake controller.	Call service.
58	PLC_ERR	Programmable Logic Controller Error	Call Service	PLC	PLC error detected.	Call service.
59	PLC_ST_MM	Programmable Logic Controller State Mismatch	Call Service	Unit	PLC feedback error detected.	Call service.
73	INPUT_PS_FAIL	Input Control Power Supply Failure	Call Service	Unit	System output control power supply is not operating properly.	Call service.
74	OUTPUT_PS_FAIL	Output Control Power Supply Failure	Call Service	Unit	System output control power supply is not operating properly.	Call service.

Servicing

ATTENTION: Service must be performed by qualified personnel only.

Before attempting any servicing that requires opening the HC-DySC doors first put the system into *Bypass* (maintenance) mode as described in Maintenance Bypass Transfer Procedure on page 20.

CBI Circuit Breaker, Safety Interlocks and Stored Energy

The HC-DySC corrector includes a fast-discharge circuit to quickly dissipate stored energy when the CBI circuit breaker is opened. Always follow the Maintenance Bypass Transfer Procedure on page 20 to close the CBB circuit breaker before opening the CBI circuit breaker. Failure to follow these instructions may result in load power interruption.

If the upstream power is interrupted before CBI is opened the fast-discharge circuit will not be triggered. In that case wait at least 30 minutes before opening the HC-DySC corrector doors to avoid exposure to charged capacitors. High voltage remains on capacitors if the red status indicators above the power module capacitor banks are lighted.

Fuses

Fast-acting fuses are included to protect the HC-DySC corrector in the event of a load short circuit condition. If the system is found to be offline and the display shows an “Open Fuse” alarm then a load short circuit may have occurred. If there is no output voltage present and the display is off, it is an indication that an upstream protection device has opened. If the bypass circuit breaker CBB opens due to an overcurrent condition, it will need to be manually reset. Pump the spring charging handle on the CBB motor operator until it indicates that the spring is charged. CBB may automatically close once it is reset.

ATTENTION:

- Turn the power to the corrector’s electronics off by placing the HC-DySC switch into BYPASS or opening the branch circuit breaker before replacing any fuse. Failure to comply with this warning can result in injury or death.
- The HC-DySC has high voltage remaining up to 30 minutes after disconnection from the AC line. Touching exposed or disconnected terminals, cables or parts of the corrector can lead to serious injuries or even death. Wait for a minimum of 5 minutes before performing any service or testing on the corrector after power is removed. Keep doors closed until all internal status indicators are extinguished.
- Keep the cabinet doors closed to allow airflow and proper cooling and to protect personnel from dangerous voltages inside the HC-DySC corrector.

Fuse locations within the HC-DySC cabinet are shown on a label inside the door.

IMPORTANT A qualified electrician must replace the fuses. Open the front cabinet door(s) to access the fuse holders and fuses.

To maintain protection of the HC-DySC corrector, be sure to replace the fuse with the same type and rating. These fuses are available through Rockwell Automation Technical Support.

Fuse Rating Charts

Table 12 - HC-DySC Enclosure Fuses

HC-DySC Enclosure Fuses				
Fuse Reference	**Fuse Location**		**Fuse Rating**	**Manufacturer Part Number**
F1, F2, F3	Main Cabinet	Main Power Input	400A/500V	Mersen A50QS400-4IL
F4, F5, F6		Cross-Coupling Transformer	100A/600V	Mersen AJT100
F7, F8		Cross Coupler Auxiliary	2A/600V	Mersen ATQR2
F9, F10 (380V - 480V models)		Output Control Transformer	7A/600V	Mersen AJT7
F9, F10 (200V - 240V models)		Output Control Transformer	17.5A/600V	Mersen AJT17-1/2
F11, F12		Output Control Transformer	10A/600V	Mersen ATQR10
F13, F14 (380V - 480V models)		Input Control Transformer	2A/600V	Mersen AJT2
F13, F14 (200V - 240V models)		Input Control Transformer	4A/600V	Mersen AJT4
F15		Input Control Transformer	4A/600V	Mersen ATQR4
F16, F17, F18		TVSS Input	40KA surge / 600V	Mersen VSP40-2
F19 (4 wire only)		TVSS Input	40KA surge / 600V	Mersen VSP40-2
F20, F21, F22 (3 wire models only)		Neutral Forming Transformer	7A/600V	Mersen AJT7
F23 (3 wire models only)		Neutral Forming Transformer	15A/600V	Mersen ATQR15
F24, F25, F26 (GT units only)		GT Contactor	200A/500V	Mersen A50QS200-4IL
F27, F28, F29 (GT units only)		GT Input Snubber	15A/600V	Mersen ATMR15
HC-DySC Power Module Fuses				
Fuse Reference	**Fuse Location**		**Fuse Rating**	**Manufacturer Part Number**
F1, F2, F3, F4	Power Modules	Dynamic Brake	20A/600V	Mersen ATM20
F5		—	—	Not Field Replaceable
F6		Inverter Output	200A/500V	Mersen A50QS200-4
F7		Rectifier	350A/500V	Mersen A50QS350-4

Transient Voltage Surge Suppressor (TVSS)

The HC-DySC corrector includes an internal TVSS device (or SPD), protecting the output (load). Indicator lights on the TVSS show if surge protection is not active (internally disconnected). Power to the TVSS module may be removed by opening the block of fuses F16-F17-F18 and F19 (present in 4-wire models only).

Specifications and Dimensions

Technical Specifications

Table 13 - Technical Specifications 200 A HC-DySC Systems

Electrical Input/Output (Normal Mode—Static Switch)	
Connection Configuration	Series-connected with load. Under normal line condition, the static switch passes utility voltage directly to the load
Input Voltage	3-phase: 480V (1)
Voltage Range	-10...+5%
Available Short Circuit Current	65 kA
Current Overload (Static Switch)	150% @ 30Sec., 400% @ 5 Sec., 600% @ 0.5 Sec.
Frequency	50/60 Hz Auto Sensing
Frequency Range	48...62 Hz
TVSS	Output SPD, 40kA/mode
Efficiency	> 99% @ 480V
Electrical Output (Sag Correction Mode - Inverter)	
Output Voltage	Pre-sag rms voltage
Voltage Regulation	± 5% typical, +5% / -13% of nominal max
HC-DySC Output Current	200 A_{RMS} (2) Not rated for DC loads; max. allowable 2% DC loading
Crest Factor (at nameplate rms load)	1.45
Voltage Waveform	Sine wave
Voltage Sag Correction Times (not applicable in GT mode)	
Single Event	
3 phase 87% to 50% Voltage Remaining	5 seconds
All three phases to zero voltage remaining	63 ms at 200A load and 0.7 Power Factor; 100ms at 90A resistive load
Multiple Event	
Max Sag Correction Time	5 seconds cumulative usage
Sequential Sag Recovery	0 seconds (assuming cumulative run-time available)
Full Recovery Time	Max 5 minutes
Mechanical	
Enclosure Ratings	NEMA 1 (IP20)
Cable Entry	Top or bottom
Cooling	Filtered forced air
Access	Front for servicing and connections
Audible Noise	Less than 67 dBA at 1 m
Weight	1550 lb (700 kg)
Environmental	
Ambient Temperature	0 ...40 °C
Storage Temperature	-40...75 °C
Relative Humidity	5...95% non-condensing
Altitude	Rated current available to 1000m (3300ft). De-rate output current 10% per 1000 m, from 1000 m to 3000 m (9900ft).
Safety and Compliance	
Agency Approvals	cULus Listed (UL 1012)
Standards Compliance	Exceeds SEMI F47 Standard; IEEE Std C62.41.1 and UL 1449 3rd Ed. compliant

(1) The HC-DySC corrector has not been evaluated for compliance with CSA - 22.2 No. 107.1-01 for use in corner grounded or ungrounded delta power systems in systems rated over 440V.

(2) When using an HC-DySC corrector with motor drive loads, either insert 3% to 5% line reactance at HC-DySC output or limit motor drive loads to 60% of HC-DySC rating

Table 14 - Heat Dissipation

Rating (V)	Heat Loss (W)	Heat Loss (Btu/h)	Efficiency (%)
480	1250	4265	> 99%

Approximate Dimensions

Dimensions are shown in inches (millimeters). Dimensions are not intended to be used for manufacturing purposes.

Figure 30 - 200 A HC-DySC System Dimensions

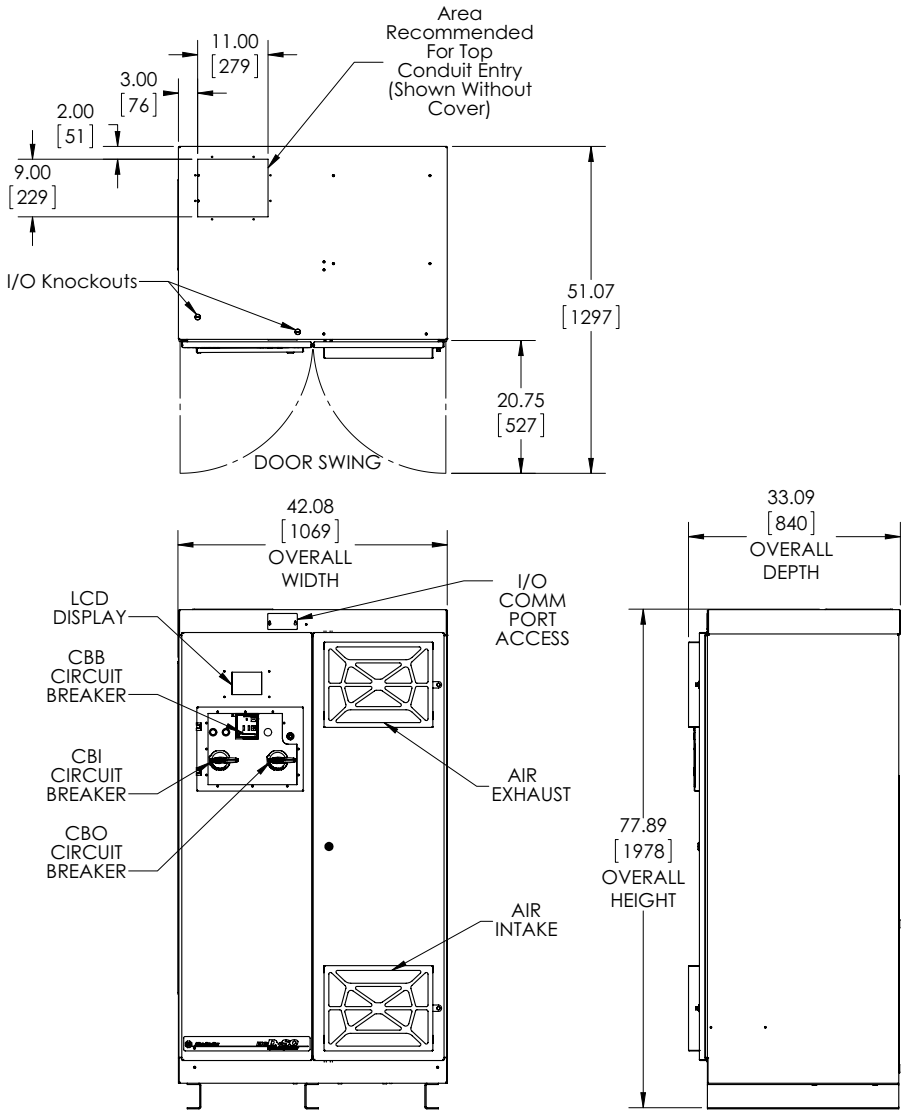

Generator Transfer (GT) Option

GT Option Description

HC-DySC corrector catalog numbers that end with "-GT" include the generator transfer option. The HC-DySC corrector with Generator Transfer (GT) option is able to switch between two modes of operation: series connected mode and shunt connected mode. The GT model operates identically to the HC model when in the normal series-connected mode; this mode provides excellent voltage sag correction performance. When transferred to the shunt-connected mode the GT model can provide regulated voltage to connected loads during brief, input voltage outages. This includes open-circuit transfer periods typical of a back-up power system that is connected through an Automatic Transfer Switch (ATS).

GT Option Operation

A Generator Transfer Command signal from the facility is required. The HC-DySC corrector with generator transfer option is able to provide open transition ride through protection only if these communications are properly installed. Rockwell Automation or other qualified applications engineers, must specify the connection requirements in consultation with the end user.

The generator transfer command signal is a dry relay contact that opens before the facility ATS transfers the HC-DySC corrector power source from grid power to emergency power. The generator transfer command signal must be received by the HC-DySC corrector at least 1second before the ATS transfer. When the HC-DySC corrector receives the generator transfer command signal, it transitions from the series connection mode to the shunt connection mode in preparation for the ATS transition. When the HC-DySC corrector is in the shunt connection mode, "GEN TRNS MODE" displays in a blue bar in the upper right corner of the screen. See Figure 31. After the ATS transitions back to grid power, the generator transfer command signal can be removed and the HC-DySC corrector will transition back to the series connection mode.

Figure 31 - Home Screen GT Mode

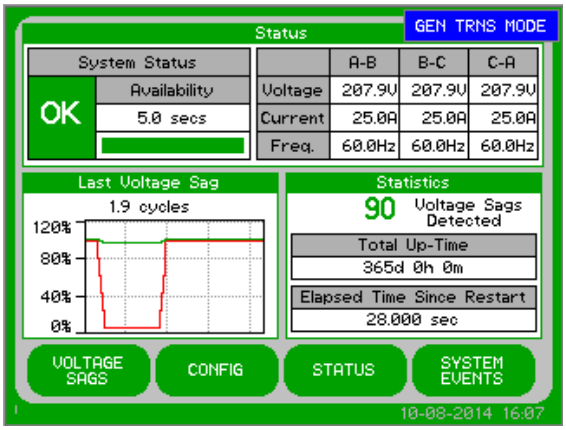

ATS / Generator Contacts

The generator transfer command dry relay contact provided by the user must be rated for at least 24 VDC and 20 mA continuous current. User connections to the HC-DySC corrector are made at terminal block TB2. The location of TB2 is shown in Figure 32. For access to the TB2 screw terminal block, remove the I/O knockout in the top left of the HC-DySC cabinet as shown in Figure 2 on page 11.

Figure 32 - TB2 Location

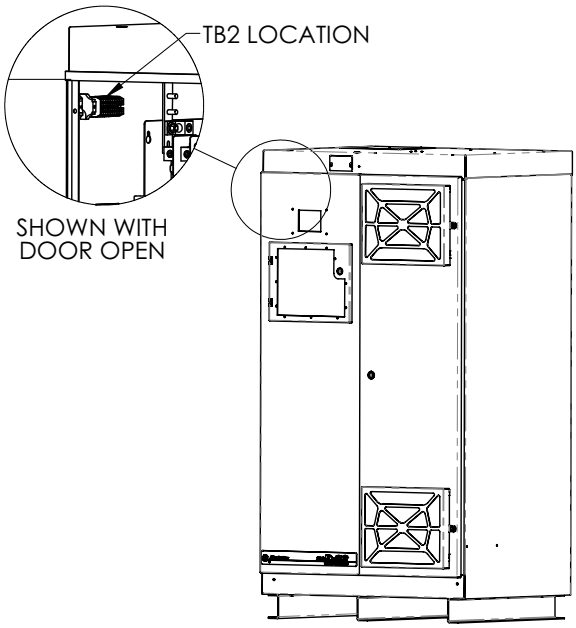

Typical TB2 connections for a hardwired generator transfer command contact signal are shown in Figure 33. The signal is connected between positions 1 and 2. Position 1 provides 24VDC to a (normally closed) auxiliary contact on the ATS or generator circuit, which is fed back to terminal 2. Open the external contact to put the HC-DySC corrector in GT mode. An internal contact between Positions 3 and 4 closes whenever the HC-DySC corrector is in the GT mode. This is a remote indicator that the HC-DySC corrector is in GT Mode. This contact is rated for 2A and 24V.

IMPORTANT **If the HC-DySC corrector 24V supply is used to power a remote indication device the device must not exceed 15 W.**
To place the HC-DySC corrector permanently in GT mode: open the connection between TB2 positions 1 and 2.

Position 5 provides the 24V return, which is internally connected to chassis ground. If an optional READY indicator is installed, connect all 24V returns together when multiple HC-DySC units are installed, as shown in Figure 34.

IMPORTANT **TB2 Recommended torque is 8 lb.-in. (0.9 N-m).**
Acceptable wire sizes are 22...8 AWG.

Figure 33 - Typical TB2 ATS / Generator Communication Connections

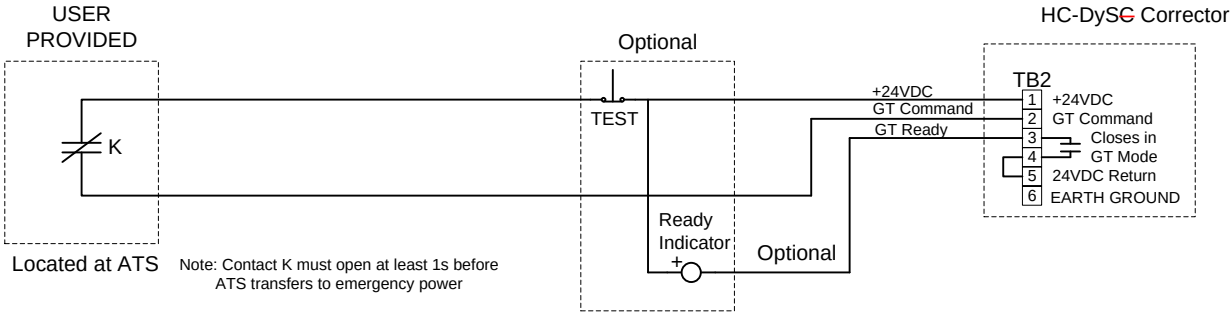

Figure 34 - Typical TB2 ATS/Generator Communication Connections (Multiple HC-DySC Units)

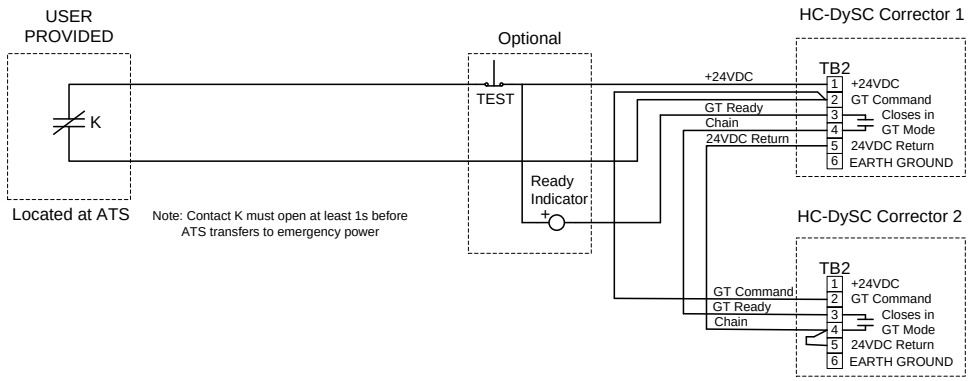

GT Command Over Ethernet

It is possible to transmit the generator transfer command from the ATS to the HC-DySC corrector over an Ethernet network. This allows the HC-DySC unit to be placed away from the transfer switch without having to run dedicated hardware control lines. The only requirement is a network connection at the HC-DySC corrector location and at the ATS location. An example implementation is shown in Figure 35. This option is not provided by Rockwell Automation, however, it may be implemented by a system integrator or end user.

Time must be allowed for the HC-DySC corrector to enter generator transfer mode before the ATS changes states. The HC-DySC corrector must receive the generator transfer command signal at least 1second before the ATS transfers to emergency power. The delay time from generator transfer command contact closure to the ATS transfer to emergency power must be 1s plus the maximum expected network latency time.

Two Ethernet enabled PLCs may be used to transmit the generator transfer command dry contact signal over the Ethernet network. Rockwell Automation recommends the Allen Bradley Micro820 PLC (Cat. No. 2080-LC20-20QWB). Visit http://www.rockwellautomation.com/support for more information.

Figure 35 - GT Command Over Ethernet

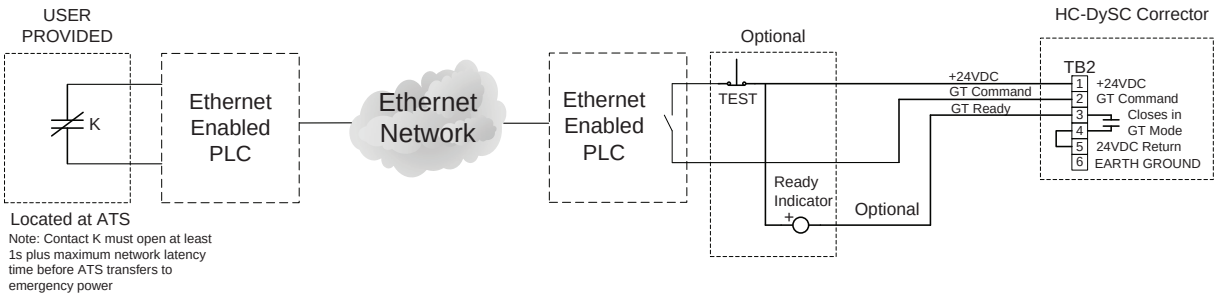

Rockwell Automation Support

Rockwell Automation provides technical information on the Web to assist you in using its products.
At http://www.rockwellautomation.com/support you can find technical and application notes, sample code, and links to software service packs. You can also visit our Support Center at https://rockwellautomation.custhelp.com/ for software updates, support chats and forums, technical information, FAQs, and to sign up for product notification updates.

In addition, we offer multiple support programs for installation, configuration, and troubleshooting. For more information, contact your local distributor or Rockwell Automation representative, or visit http://www.rockwellautomation.com/services/online-phone.

Installation Assistance

If you experience a problem within the first 24 hours of installation, review the information that is contained in this manual. You can contact Customer Support for initial help in getting your product up and running.

United States or Canada	1.440.646.3434
Outside United States or Canada	Use the Worldwide Locator at http://www.rockwellautomation.com/rockwellautomation/support/overview.page, or contact your local Rockwell Automation representative.

New Product Satisfaction Return

Rockwell Automation tests all of its products to help ensure that they are fully operational when shipped from the manufacturing facility. However, if your product is not functioning and needs to be returned, follow these procedures.

United States	Contact your distributor. You must provide a Customer Support case number (call the phone number above to obtain one) to your distributor to complete the return process.
Outside United States	Please contact your local Rockwell Automation representative for the return procedure.

Documentation Feedback

Your comments will help us serve your documentation needs better. If you have any suggestions on how to improve this document, complete this form, publication RA-DU002, available at http://www.rockwellautomation.com/literature/.

Rockwell Automation maintains current product environmental information on its website at
http://www.rockwellautomation.com/rockwellautomation/about-us/sustainability-ethics/product-environmental-compliance.page.

Rockwell Otomasyon Ticaret A.Ş., Kar Plaza İş Merkezi E Blok Kat:6 34752 İçerenköy, İstanbul, Tel: +90 (216) 5698400

www.rockwellautomation.com

Power, Control and Information Solutions Headquarters

Americas: Rockwell Automation, 1201 South Second Street, Milwaukee, WI 53204-2496 USA, Tel: (1) 414.382.2000, Fax: (1) 414.382.4444
Europe/Middle East/Africa: Rockwell Automation NV, Pegasus Park, De Kleetlaan 12a, 1831 Diegem, Belgium, Tel: (32) 2 663 0600, Fax: (32) 2 663 0640
Asia Pacific: Rockwell Automation, Level 14, Core F, Cyberport 3, 100 Cyberport Road, Hong Kong, Tel: (852) 2887 4788, Fax: (852) 2508 1846

Publication 1608P-UM005D-EN-P - July 2015

Supersedes Publication 1608P-UM005C-EN-P - November 2014