Safety Relays

(Catalog Number 700-Z)

Product Data

Contents

This product data contains:

Rockwell Automation

Allen-Bradley

Introduction

Safety relays are becoming a popular component in safety systems, due to increasing regulations and attempts to safeguard operators from hazards. When applied correctly, safety relays will detect failures in output and input devices, as well as internal failures, allowing power to be removed from a load, even if a contact is welded, and prohibit a subsequent restart of the load until the failure is corrected. Safety relays are just one component in the safety control system. All components in the system must be chosen and applied correctly, to achieve the desired level of operator safeguarding.

This publication describes the operation of a safety relay, discusses applications, outlines some of the standards that reference safety, and provides specifications for Allen–Bradley safety relays.

For safety relay technical and application support, call 1-888-790-8377.

Additional Literature for Safety–Related Issues:

- Understanding the Machinery Directive, publication SHB–900
- A Global Reference Guide for Reading Schematic Diagrams, publication 100–2.10
- Industrial and Safety Relay Selection Guide, publication 700–1.9
- Safety Relay Color Overview, publication 700–1.13
- Modular Control System, publication 100C–1.0.1
- Safety Interlock and Cable Pull Switches Color Overview, publication 802SS–1.0
- Stack Light Selection Guide, publication 855T–1.0
- Flexible Solutions In Control and Load Switches, publication 194–1.01
- 30mm NEMA Style Push Button Selection Guide, publication 800–1.2
- 22mm IEC Style Push Button Selection Guide, publication 800E–1.12

What Is a Safety Relay?

A safety relay:

- Is designed with an internal circuit that will allow power to be removed from a load even if an internal contact welds.
  - The internal circuit is redundant and self–monitoring, using multiple, positive–guided relays.
- Monitors faults in the safety relay, and the input (e.g. Start and Stop Buttons) and output (e.g. Auxiliary Relay) devices.
- Typically replaces the relay (often a master control relay) that interfaces between input devices and contactors or starters.
- Can be ordered with different numbers of contacts, like any other relay.
  - The contacts are called “monitored outputs” or “safety outputs”, and have two or more contacts in series to achieve redundancy for each load (refer to figure 1).
- Is designed to meet requirements for safety categories as outlined in European Norm EN 954 and EN 574.

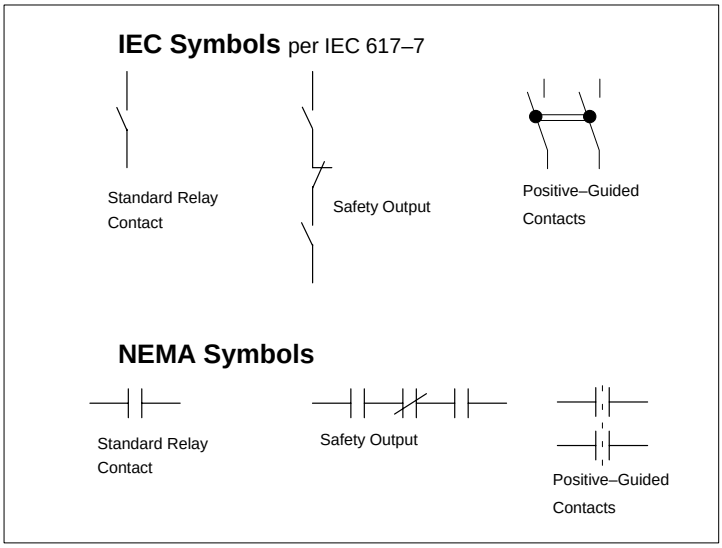

Figure 1

Positive–Guided Relays

Also called “All–or–Nothing Relays with Positively Driven Contacts”. Relays of this type have contacts that are mechanically connected together, such that if a normally open (NO) or make contact remains closed, a normally closed (NC) or break contact can not re–close. Additionally, if a NC contact fails to open upon energizing the relay, the NO contacts shall not close. This is outlined in ANSI B11.19 and EN 50205.

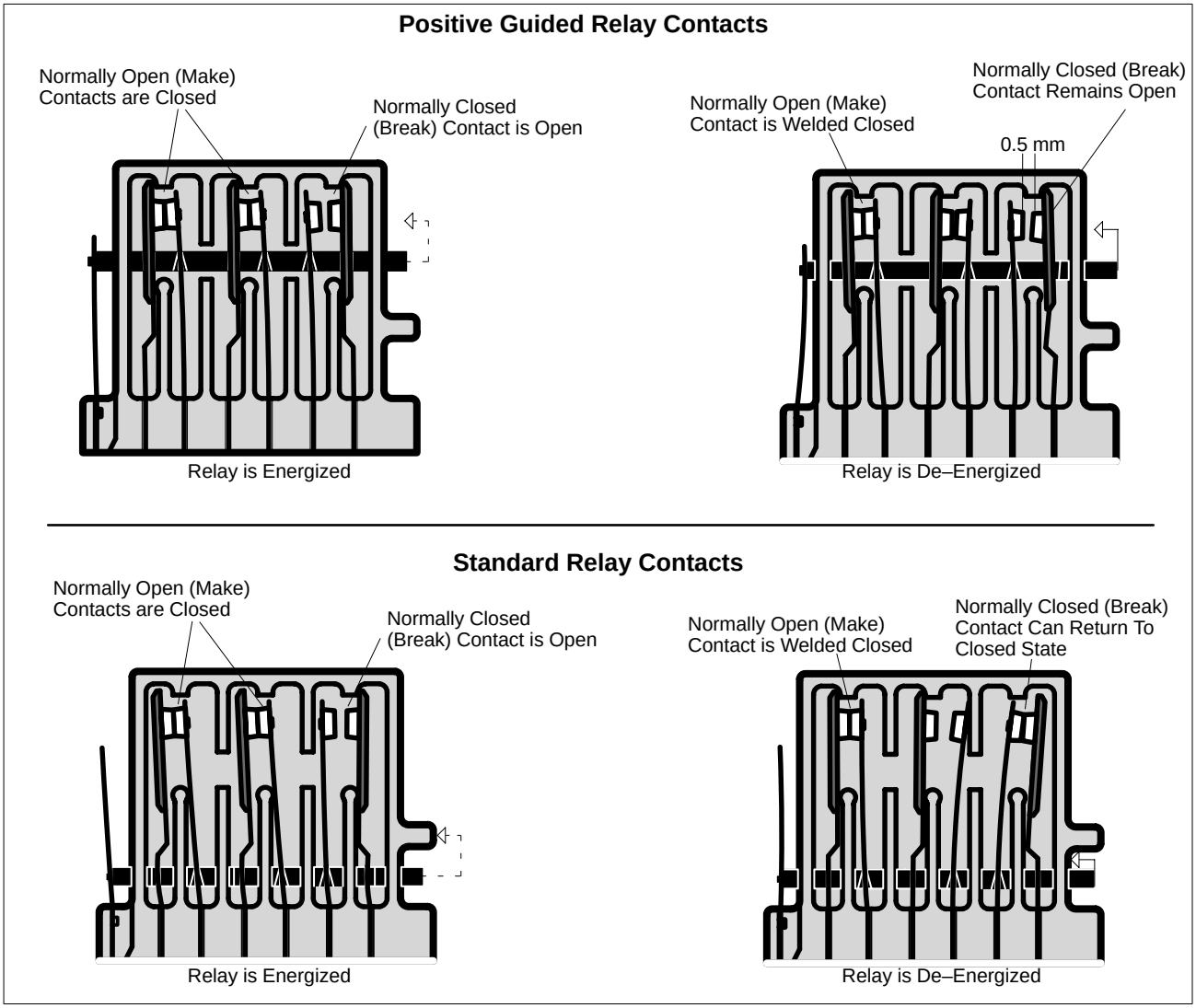

Figure 2

The positive–guided feature is necessary in the circuit design to ensure that the circuit does not re–close after a fault. Redundant contacts wired in a series ensure that the power can be removed from the load, even if a contact has welded. Refer to the redundant, self–monitoring circuit (page 5) for a more extended explanation.

Relays with positive–guided contacts can be the standard panel or DIN rail mount varieties, or printed circuit board mount, like those found inside safety relays.

Redundant, Self–Monitoring Circuit

The figure below shows a typical control circuit with a master control relay. This circuit works fine, if we can assume that CR(b) never welds. If CR(b) were to weld, pushing the E–Stop button will not remove power from the motor (M). If the motor drives a blade or cutter, the hazard can not be disabled. If the operator assumes the blade has stopped and enters the area, he could suffer serious injuries.

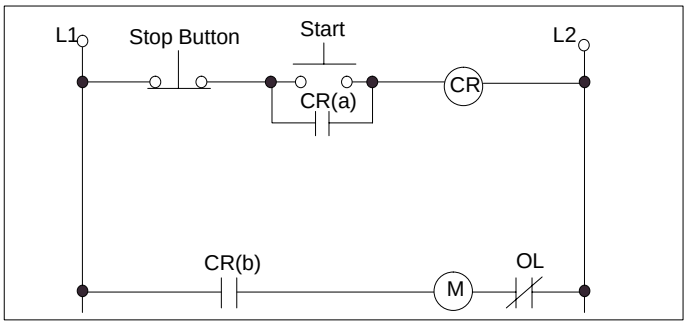

Figure 3

If a process can cause serious harm to an operator, it is a likely candidate for a redundant, self–monitoring control circuit, like the one shown below. This is similar to the internal circuit found in an Allen–Bradley safety relay. It is redundant because it uses three relays (redundancy requires two or more of a given component). It is self–monitoring or self–checking because it allows power to be removed from a load, even if a contact welds, but will not allow a subsequent restart until the fault is eliminated.

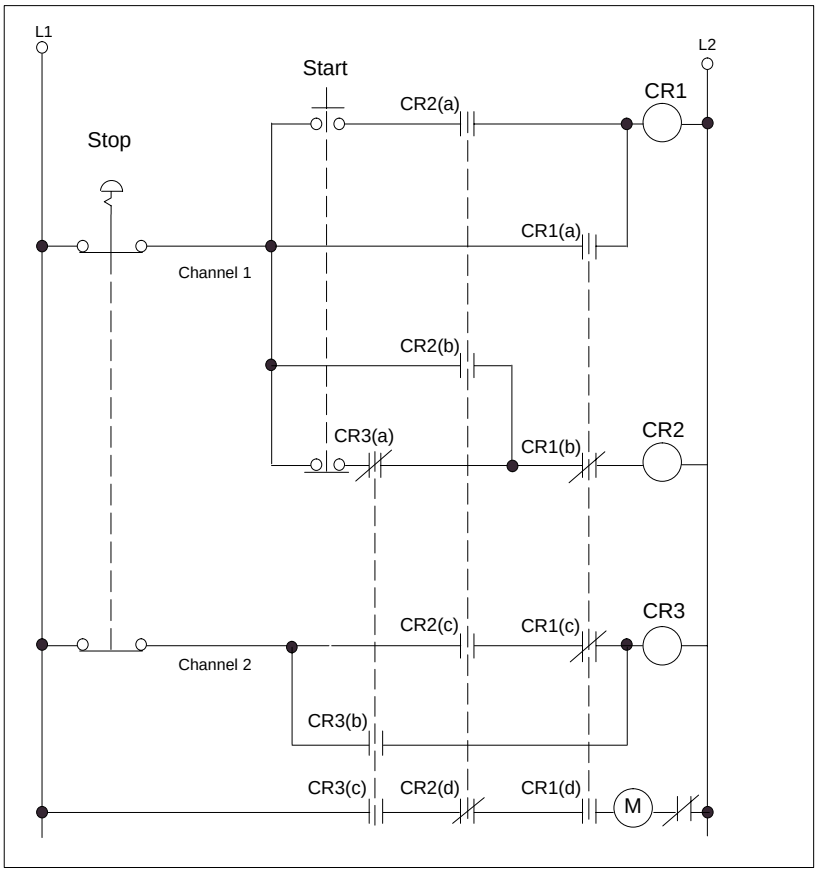

Figure 4

Normal Operation

When the E–Stop is pulled up, power flows through CR3(a) and CR1(b) energizing the coil CR2. When this coil is energized, the NO contacts CR2(a), CR2(b), and CR2(c) close and energize coil CR3. The NO contact CR3(b) closes and holds the coil CR3 energized. The device is now “armed and ready”.

When the operator pushes the start button, coil CR1 energizes. CR1(a) closes to hold in CR1. Then the NC contact CR1(b) opens and disconnects power from coil CR2. The final state is: coil CR1 on, coil CR2 off, and coil CR3 on. This condition allows the contacts of the output line [CR1(d), CR2(d), CR3(c)] to be closed and the load energized. The output line is also called the “monitored output” or the “safety output”. The terminology is the same for safety relay outputs.

Fault Examples

- Start Button Welded (Fault):
  If the start button is welded (i.e. held energized) when the E–Stop is reset, then coil CR2 will not energize because the circuit is never complete in the rung with CR3(a) and CR1(b). Since coil CR2 can not energize, it is not possible to pull in coil CR3 or CR1 because CR2(c) will not close.
- Output CR2(d) Welded (Fault):
  After resetting the E–Stop, coil CR2 will energize, but since contact CR2(d) is welded and CR2 is positive guided, the NO contact of CR2(c) will not close, thus coil CR3 can not energize and the system can not be started again. Similarly, if CR1(d) welds, CR1(b) will be held open. If CR3(c) welds, CR3(a) will be held open. Both situations prevent coil CR2 from energizing, so the system can not be rearmed.
- E–Stop Failure:
  If there is a short across the channel 2 contact block of the E–Stop, then CR3 will not de–energize, but CR1 will open the load. Restart is not possible since CR3(a) did not re–close preventing CR2 from re–energizing. Similar fault detection is provided for the channel 1 E–Stop circuit via CR1(b).

Safety Relay Operating Principle

The safety relay has a similar circuit to the one described in figure 4. Figure 5 shows the wiring for a typical category 4 E–Stop (two contacts or “channels” on the E–Stop). The timing diagram in figure 6, shows the sequence of events when the E–Stop is closed and the reset button is pressed.

IEC Diagram

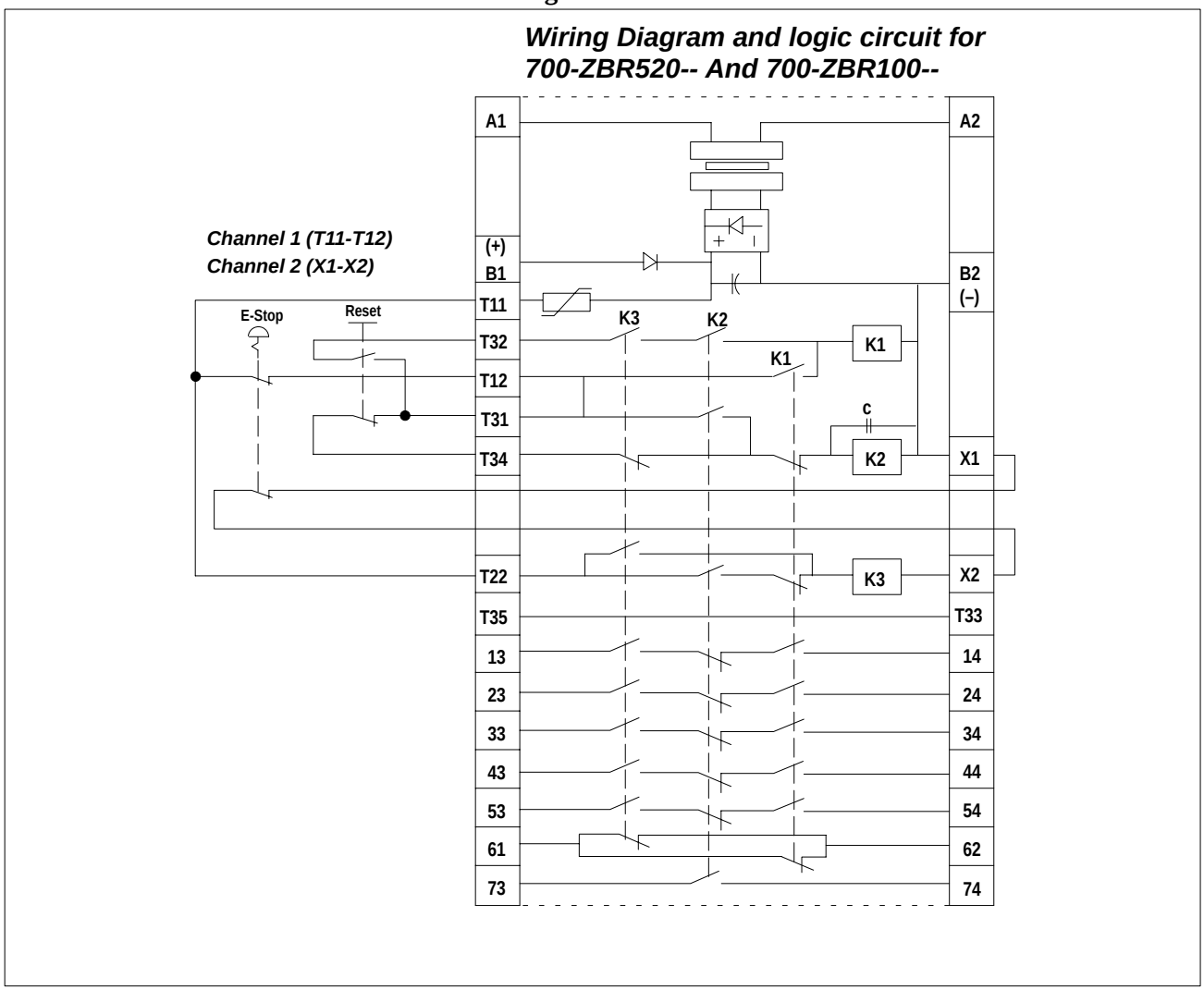

Figure 5

	E–Stop Open	E–Stop Reset	Reset Button Depressed	K2 De–Energized	Reset Button Is Released
	All relays are de–energized	–Relay K2 is energized –K2 NO contacts between T22 and relay K3, and between T32 and relay K1 are closed –Relay K3 is energized a short time later –K3 NO contact between T32 and relay K1 closes	–Reset NC contact opens –Reset NO contact closes –Relay K1 is energized –Relay K2 begins to time out	–K2 NC contacts in the output circuits close –Output circuits are closed and loads can be energized –All signaling circuits open	–No specific time duration needed
E–Stop Channel 1 (T11–T12)					
E–Stop Channel 2 (X1–X2)					
Reset NO (T31–T32)					
Reset NC (T31–T34)					
Relay K1					
Relay K2					
Relay K3		50 msec Max			
Safety Outputs 13–14, 23–24, 33–34, 43–44, 53–54					
Signal output 61–62.					
Signal output 73–74.					

Legend

Figure 6

Safety Relay Benefits

- Enhanced Operator Safety
  - When applied and wired correctly, common control system faults that could lead to a hazardous situation can be minimized through the redundancy and self-monitoring provided by the safety relay. Safety relays allow the operator to remove power from the load even when a fault occurs. This can reduce potential injuries and lost workdays. Obviously, worker safety is the first concern, but safety relays may also lead to reduced compensation and legal issues.
- Enhanced Machine Performance
  - Safety relays can minimize costly downtime and replacement parts costs, by allowing the machine to perform according to its intended design. Operator injuries result in machine damage that must be repaired. The maintenance time and replacement parts add to operating costs.
  - If downtime is minimized, the process works according to design and maximizes productivity and efficiency for the business.
- Easier Troubleshooting
  - LEDs provide clear diagnostics to quickly identify faults – LEDs indicate power, run, input short, input fault, and output fault. Refer to the Troubleshooting Guide section (page 29) for a complete diagnostic overview.
- Simplified Installation
  - Clearly marked terminals
  - DIN rail mount
  - Small, with core circuit wires contained in the box
- Flexible Configurations
  - Multiple voltages in a single unit – 120V AC, 24V AC/DC
  - Multiple function versions, or E–Stop only – reduce stocked parts, simplify parts with a multiple function unit (includes E–Stop, safety gate, and two–hand control)
  - Expander units available, for additional outputs
  - Auxiliary relays can be used for higher current applications

Catalog Number 700–ZBR520AZ1

Example shown is 90mm wide

Multiple functions in a single unit (E–Stop, safety gate, light curtain, two–hand control)

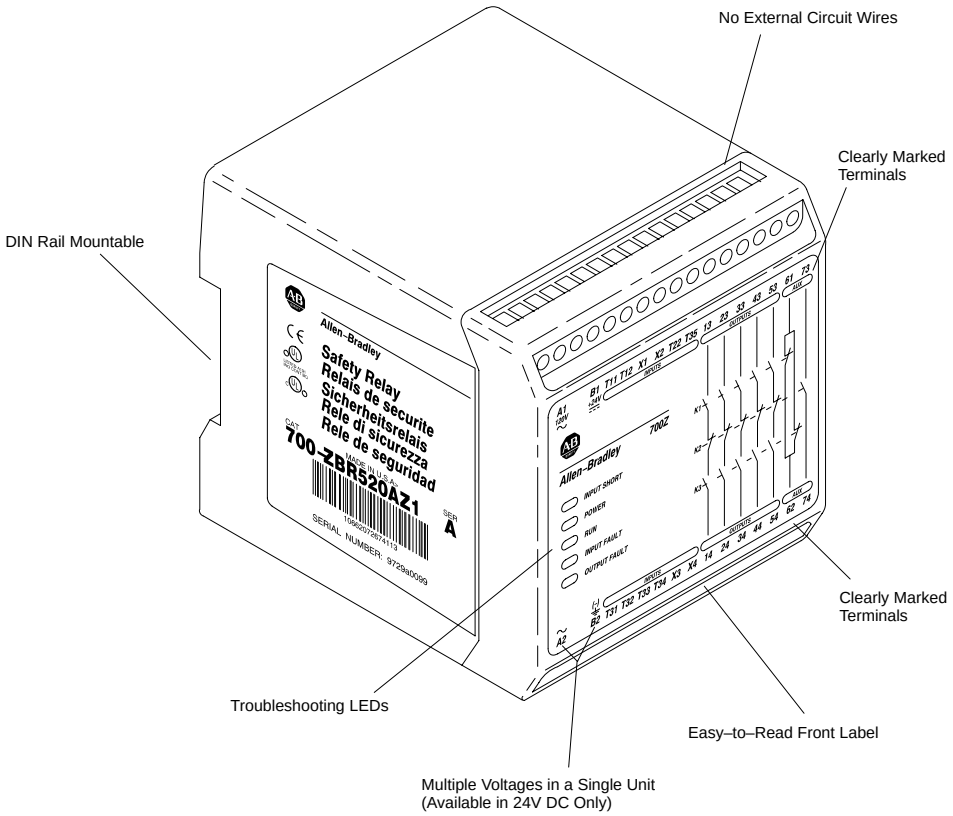

Figure 7

Safety Relay Applications

The most common applications for safety relays are in E–Stop functions, safety gates, two–hand control, light curtains, and safety mats. The following sections include connection diagrams for E–Stop functions, safety gates, and two–hand control. For light curtains and safety mats, please contact your local Rockwell Automation distributor or sales office to determine compatibility.

Diagrams are available in Auto CAD (.DRW) files and .DXF files at the Allen–Bradley Web Site, or a disk is available from your local Rockwell Automation distribution or sales office.

Note: Safety relays can be used in any application where a standard industrial relay is currently used, and more safety is required.

Emergency Stop Function

Applicable Standards

- North America:
  ANSI/NFPA 79
  7–6 Emergency Stop
  (d) The emergency stop circuit shall:
  1) operate by deactivation or de–energization and on loss of the electrical supply.
  2) have only hardware–based components (i.e. it shall not rely on software to operate), although it may be possible to initiate the circuit from the software of the programmable electronic system.
- European Market:
  EN 60204
  9.2.2 Stop Functions
  There are three categories of stop functions as follows:
  Category 0: Stopping by immediate removal of power to the machine actuators (i.e. an uncontrolled stop, see 3.59.)
  Category 1: A controlled stop (see 3.12) with power to the machine actuators available to achieve the stop and then removal of power when the stop is achieved;
  Category 2: A controlled stop with power left available to the machine actuators.

  Category 0 and Category 1 stops must be hardwired according to EN 60204.

  EN 60204
  9.2.5.4 Emergency Stop
  In addition to the requirements for stop (see 9.2.5.3 of 60204), the emergency stop has the following requirements:
  – It shall override all other functions and operations in all modes.
  – Power to the machine actuators which can cause a hazardous condition(s) shall be removed as quickly as possible without creating other hazards (e.g. by the provision of mechanical means of stopping requiring no external power, by reverse current braking for a Category 1 stop).
  – Reset shall not initiate a restart.

The emergency stop shall function as either a Category 0 or a Category 1 stop (see 9.2.2). The choice of the category of the emergency stop shall be determined by the risk assessment of the machine.

Where a Category 0 stop is used for the emergency stop function, it shall have only hardwired electromechanical components. In addition, its operation shall not depend on electronic logic (hardware or software) or the transmission of commands over a communications network or link.

Where a Category 1 stop is used for the emergency stop function, final removal of power to the machine actuators shall be ensured and shall be by means of electromechanical components.

EN 418
Includes demands for the E–Stop function:

4.1.1 The emergency stop function shall be available and operational at all times, regardless of the operating mode.

4.1.2 The control device and its actuator shall apply the principle of positive mechanical action.

4.1.4 After activation of the actuator, the emergency stop equipment shall operate in such a way that the hazard is averted or reduced automatically in the best possible manner.

4.1.7 The emergency stop command shall override all other commands.

4.1.8 The response of the machine to the emergency stop command shall not generate any additional hazard.

4.1.9 The emergency stop function shall not impair the effectiveness of safety devices or of devices with safety–related functions.

4.1.12 Resetting the control device shall not by itself cause a restart command. It shall not be possible to restart the machine until all control devices which have been actuated are reset manually, individually and intentionally.

EN 60947–5–1
Includes reference to direct-opening action for disconnect switches, emergency stop switches, safety limit switches, cable pull safety switches, and safety gate interlock switches, with direct opening defined as:
The achievement of contact separation as the direct result of a specified movement of the switch actuator through non–resilient members (e.g. not dependent upon springs).

Legend for IEC Diagrams

	S1 Emergency Stop EN 60617–7, EN 418	800T–FXT65A 800H–FRXT6A5 800EM–MTS442LX02 800EP–MTS442LX02
	S2 Reset	800T–A1A 800H–BR1A 800EM–F32LX11 800EP–F32LX11
	S3 Gate Interlock EN 1088	802F... See Pub 802SS-1.0 or C112, Chapter 3
	Positive operation EN 60617–7	Contacts are forced open mechanically
	Force guided contacts EN 60947–5 EN 50205	If N.O. welds all N.C. contacts cannot close
	Mechanically linked EN 60617–2	Contact set travels together

IEC E–Stop Diagrams

E-Stop variation1: **Single E-Stop, Category 2, Single channel input**

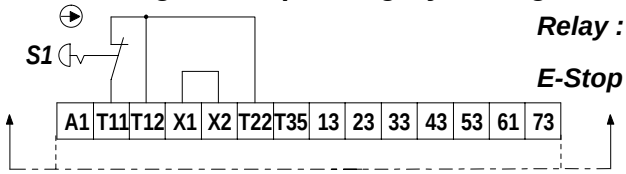

Relay : ***700-ZBR520AZ1***
700-ZBR100AZ1
E-Stop : ***800T-FXT6D4***
800H-FRXT6D4
800EP-MTS442LX01

E-Stop variation2: **Multi- E-Stop, Category 4, Dual channel input**

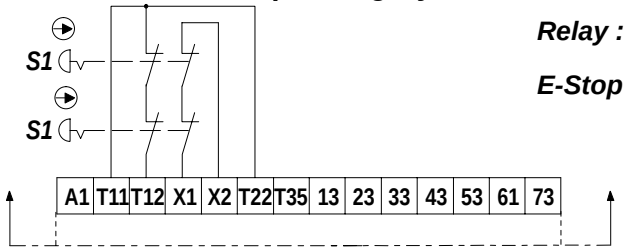

Relay : ***700-ZBR520AZ1***
700-ZBR100AZ1
E-Stop : ***800T-FXT6A5***
800H-FRXT6A5
800EP-MTS442LX02

E-Stop Category 4
700-ZBR520AZ1/700-ZBR100AZ1
Dual channel input w/ reset

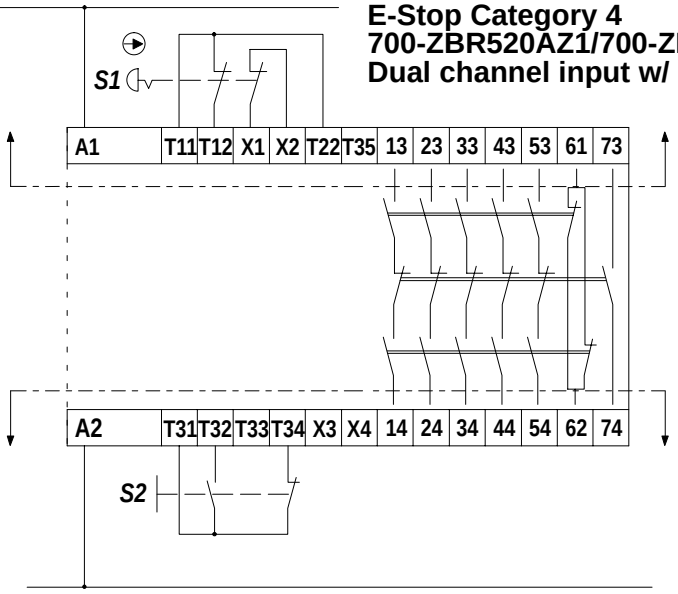

Relay:
700–ZBR520AZ1
700–ZBR100AZ1
E–Stop:
800T–FXT6A5
800H–FRXT6A5
800EP–MTS442LX02
Reset:
800T–A1A
800H–BR1A
800EM–F32LX11
800EP–F32LX11

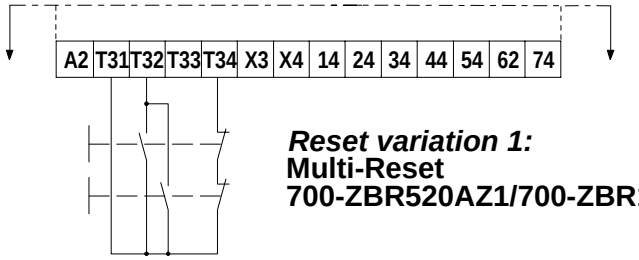

Reset variation 1:
Multi-Reset
700-ZBR520AZ1/700-ZBR100AZ1

Relay:
700–ZBR520AZ1
700–ZBR100AZ1
Reset:
800T–A1A
800H–BR1A
800EM–F32LX11
800EP–F32LX11

Attention:

- **Unexpected/unintended start-up may occur after power supply interruption.**
- **Autostart is not allowed for E-stops per EN 292-2, 60204-1 and 418.**

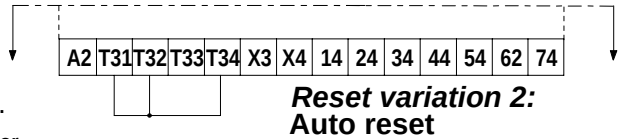

Reset variation 2:
Auto reset
700-ZBR520AZ1/700-ZBR100AZ1

Relay:
700–ZBR520AZ1
700–ZBR100AZ1

Figure 8

NEMA E–Stop Diagrams

E–Stop variation 1:
Single E–Stop,
Category 2,
Single channel input

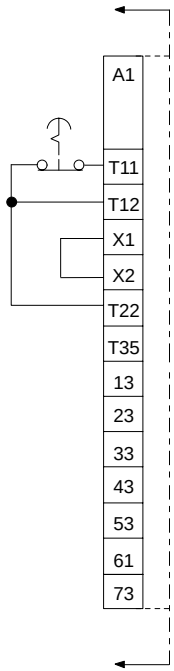

Relay:
700–ZBR520AZ1
700–ZBR100AZ1
E–Stop:
800T–FXT6D4
800H–FRXT6D4
800EP–MTS442LX01

E–Stop variation 2:
Multi–E–Stop
Category 4,
Dual channel input

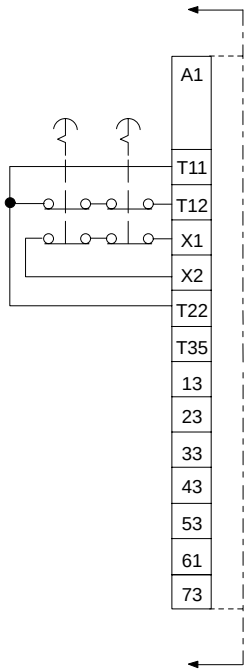

Relay:
700–ZBR520AZ1
700–ZBR100AZ1
E–Stop:
800T–FXT6A5
800H–FRXT6A5
800EP–MTS442LX02

Basic E-Stop
E–Stop Category 4
700–ZBR520AZ1/700–ZBR100AZ1
Dual channel input w/ reset

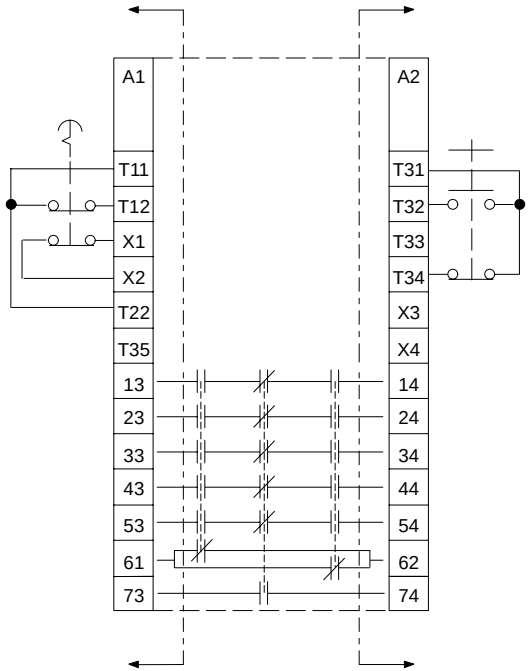

Relay:
700–ZBR520AZ1
700–ZBR100AZ1
E–Stop:
800T–FXT6A5
800H–FRXT6A5
800EP–MTS442LX02
Reset:
800T–A1A
800H–BR1A
800EM–F32LX11
800EP–F32LX11

Reset variation 1:
Multi–reset

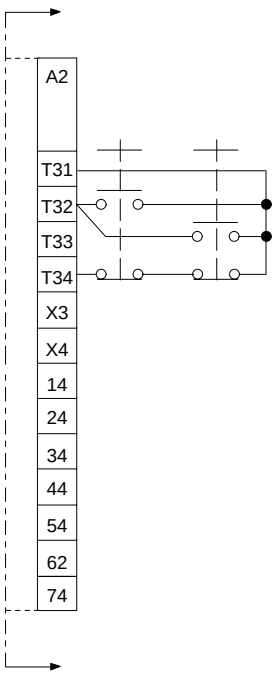

Relay:
700–ZBR520AZ1
700–ZBR100AZ1
Reset:
800T–A1A
800H–BR1A
800EM–F32LX11
800EP–F32LX11

Reset variation 2:
Auto reset

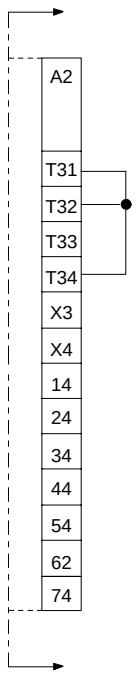

Relay:
700–ZBR520AZ1
700–ZBR100AZ1

⚠ **Attention:**

•Unexpected/unintended start-up may occur after power supply interruption.

•Autostart is not allowed for E-stops per EN 292-2, 60204-1 and 418.

Figure 9

Safety Gates

Applicable Standards

- North America:
  ANSI B11.19
  4.1.1.1.4
  The employer shall ensure that barrier guards are installed, maintained, and operated so as to protect against unauthorized adjustment or circumvention by the operator or others.
  4.1.1.2.2 (1)
  All interlocked devices used in conjunction with barrier guards shall be of such quality and design that normal operation will not render them inoperative.
  4.2.1.2.5
  Movable barrier devices shall prevent the initiation of the machine tool due to a single component failure of the device. They shall not be easily bypassed by the operator or other unauthorized personnel.

  OSHA
  1910.213 (11)
  The point of operation of machines whose operation exposes an employee to injury, shall be guarded. The guarding device shall be in conformity with any appropriate standards therefore, or, in the absence of applicable specific standards, shall be so designed and constructed as to prevent the operator from having any part of his body in the danger zone during the operating cycle.
- European Market:
  EN 1088
  Movable covers are required, if the dangerous area has to be entered very often, in order to load, unload, or fix the machine. The cover has to be designed in a way, that if it is opened, the machine or the dangerous actions have to stop. If this stop is not possible as quick as the cover can be opened, the cover has to be locked as long as the dangerous action is in effect.

  EN 60947–5–1
  Includes reference to direct-opening action for disconnect switches, emergency stop switches, safety limit switches, cable pull safety switches, and safety gate interlock switches, with direct opening defined as:
  The achievement of contact separation as the direct result of a specified movement of the switch actuator through non–resilient members (e.g. not dependent upon springs).

IEC Safety Gate Diagrams

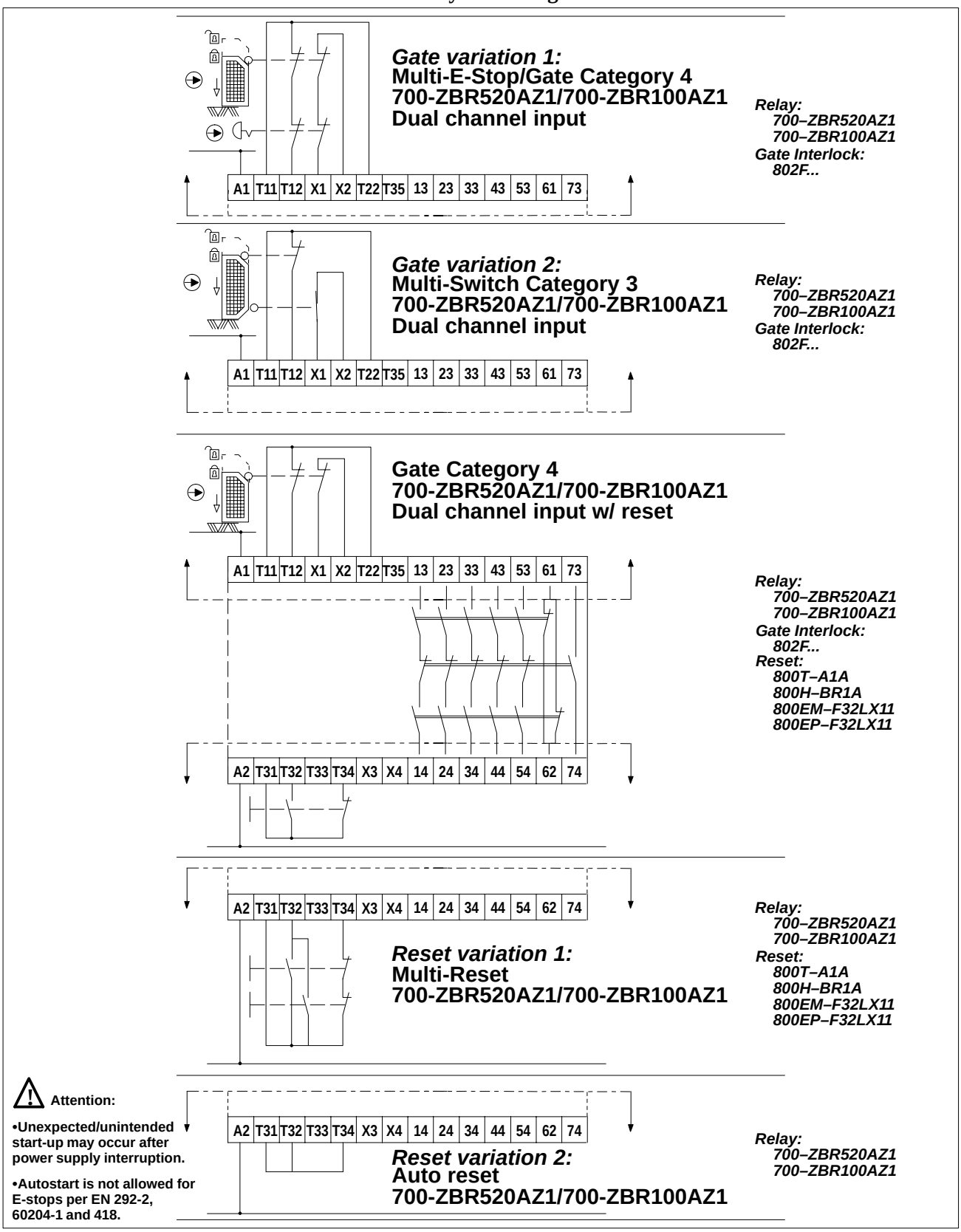

Figure 10

NEMA Safety Gate Diagrams

Gate variation 1:
Multi–E–Stop/Gate
Category 4
Dual channel input

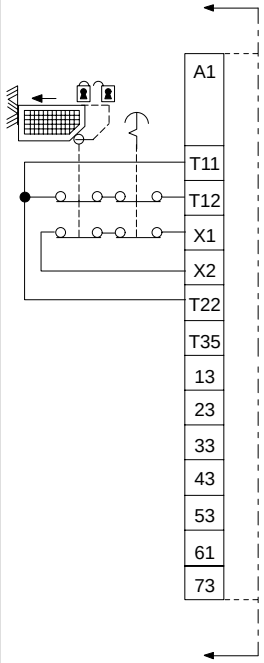

Relay:
700–ZBR520AZ1
700–ZBR100AZ1
Gate Interlock:
802F...

Gate variation 2:
Multi–Switch
Category 3
Dual channel input

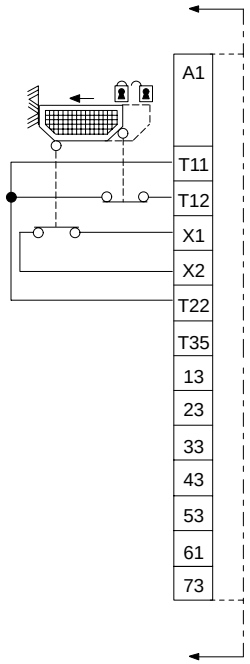

Relay:
700–ZBR520AZ1
700–ZBR100AZ1
Gate Interlock:
802F...

Gate Category 4
700–ZBR520AZ1/700–ZBR100AZ1
Dual channel input w/ reset

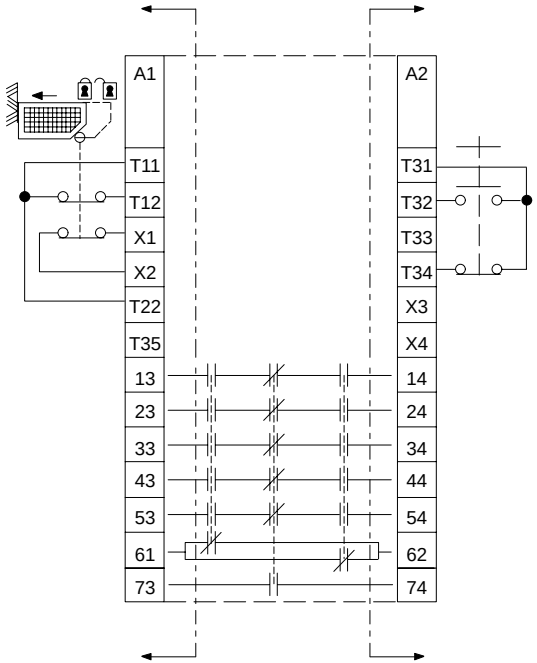

Relay:
700–ZBR520AZ1
700–ZBR100AZ1
Gate Interlock:
802F...
Reset:
800T–A1A
800H–BR1A
800EM–F32LX11
800EP–F32LX11

Reset variation 1:
Multi–reset

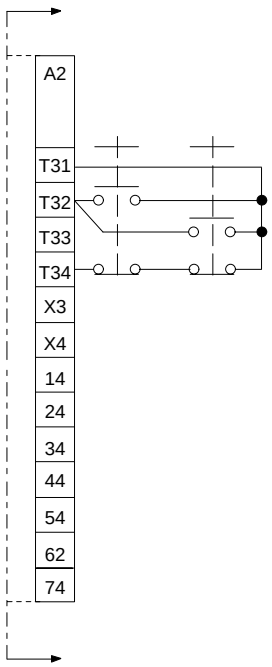

Relay:
700–ZBR520AZ1
700–ZBR100AZ1
Reset:
800T–A1A
800H–BR1A
800EM–F32LX11
800EP–F32LX11

Reset variation 2:
Auto reset

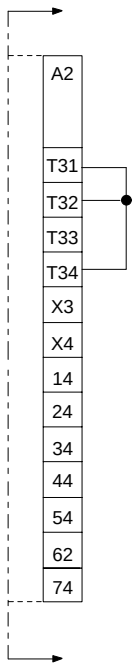

Relay:
700–ZBR520AZ1
700–ZBR100AZ1

⚠ **Attention:**

•Unexpected/unintended start-up may occur after power supply interruption.

•Autostart is not allowed for E-stops per EN 292-2, 60204-1 and 418.

Figure 11

Two–Hand Control

Applicable Standards

- European Market:
  EN 574
  Three types of two–hand control circuits are available. The risk assessment determines which one is chosen.
  Type I requires:
  1) The provision of two operating elements that require simultaneous actuation by both hands.
  2) Continuous actuation during the hazardous state; and
  3) Operation must be ended during the hazardous state if only one of the operating elements is released.

  Type II requires:
  A Type I controller that requires both operating elements to be released before operation can be restarted.

  Type III requires:
  A Type II controller that requires synchronous actuation of the operating elements as follows:
  1) Both operating elements must be actuated simultaneously within a certain time of less than or equal to 0.5s; and
  2) If the time is exceeded, then both operating elements must be released before a restart can be initiated.

Two–Hand Control Table from EN 574: 1996

List of types of two–hand control devices and minimum safety requirements

Requirements	Clause	Types				
		I	II	III		
				A	B	C
Use of both hands (simultaneous actuation)	5.1	x	x	x	x	x
Relationship between input signals and output signal	5.2	x	x	x	x	x
Cessation of the output signal	5.3	x	x	x	x	x
Prevention of accidental operation	5.4	x	x	x	x	x
Prevention of defeat	5.5	x	x	x	x	x
Re–initiation of the output signal	5.6	❶	x	x	x	x
Synchronous actuation	5.7			x	x	x
Use of category 1 (EN 954–1: 1996)	6.2			x		
Use of category 3 (EN 954–1: 1996)	6.3				x	
Use of category 4 (EN 954–1: 1996)	6.4					x

❶ NOTE: For selection of type I see 8.6.

IEC 2–Hand Control Diagrams

2–Hand Control Category 3 EN 574
700-ZBR520AZ1/700-ZBR100AZ1

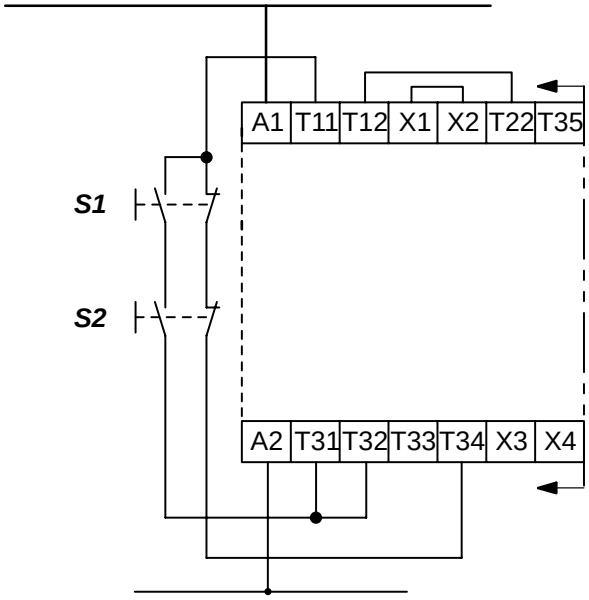

Relay:
700-ZBR520AZ1
700-ZBR100AZ1
Palm Buttons:
800P-F2CA -Flush mount
800P-F2CGA -Flush mount w/ guard
800P-S2C1A -Surface mount
800P-S2CGIA -Surface mount w/ guard

2–Hand Control Category 4 EN 574
700-ZBR520AZ1/700-ZBR100AZ1
w/E-Stop control

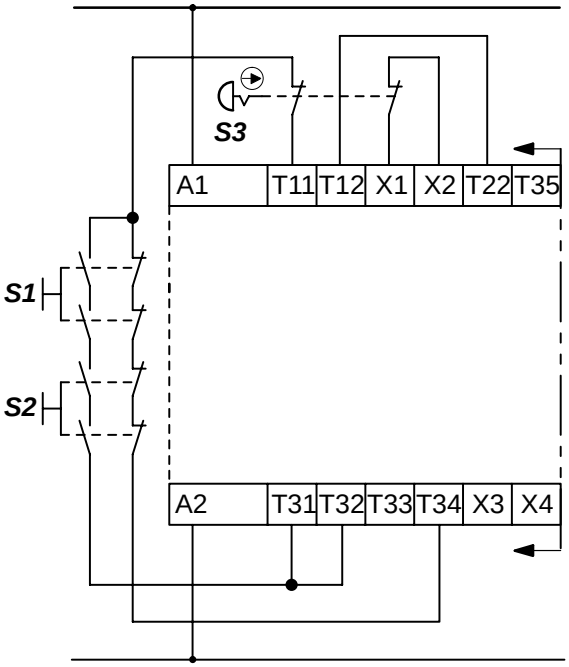

Relay:
700-ZBR520AZ1
700-ZBR100AZ1
E-Stop:
800T-FXT6A5
800H-FRXT6A5
800EP-MTS442LX02

2–Hand Control Category 4 EN 574
700-ZBR520AZ1/700-ZBR100AZ1

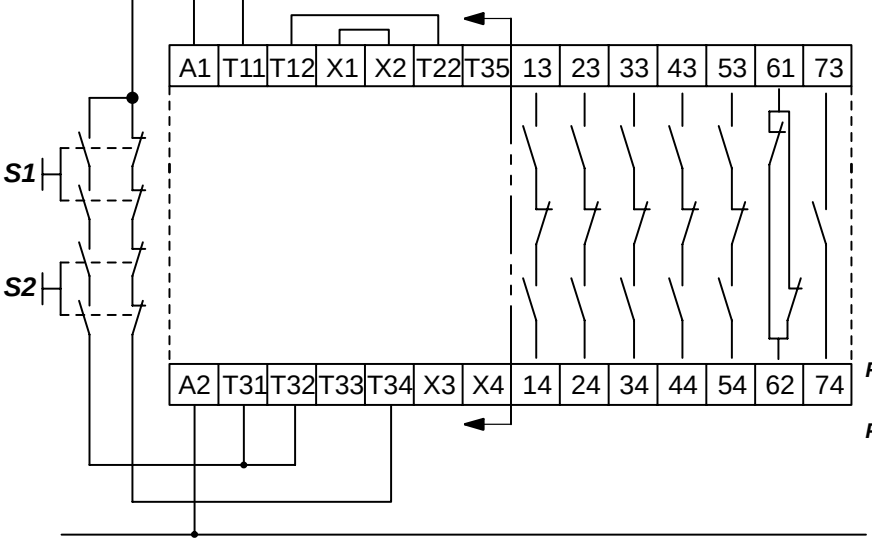

Relay:
700-ZBR520AZ1
700-ZBR100AZ1
Palm Buttons:
800P-F2CB -Flush mount
800P-F2CGB -Flush mount w/ guard
800P-S2C1B -Surface mount
800P-S2CGIB -Surface mount w/ guard

Figure 12

NEMA 2–Hand Control Diagrams

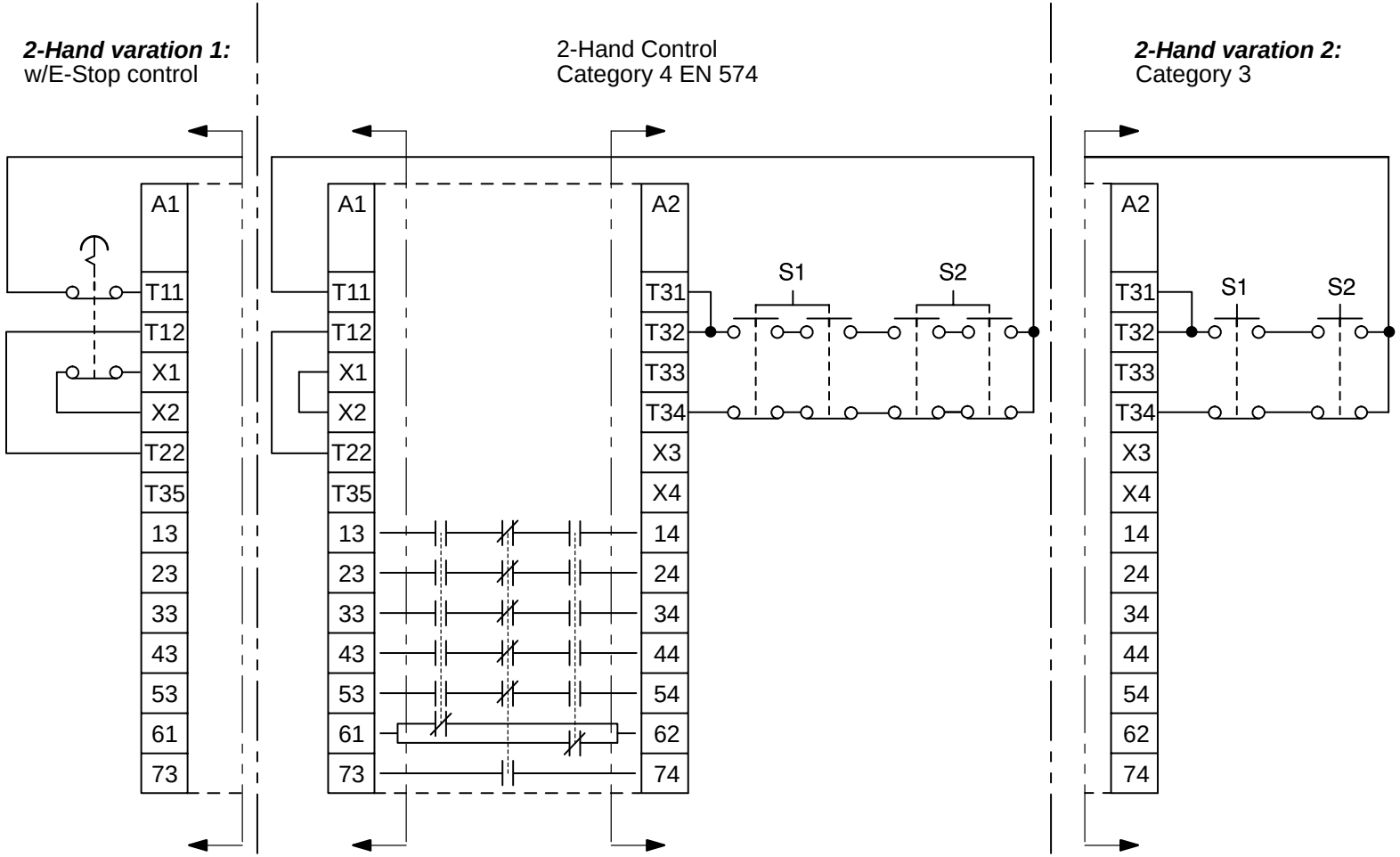

Relay:
700-ZBR520AZ1
700-ZBR100AZ1
E-Stop:
800T-FXT6A5
800H-FRXT6A5
800EP-MTS442LX02

Relay:
700-ZBR520AZ1
700-ZBR100AZ1
Palm Buttons:
800P-F2CB -Flush mount
800P-F2CGB -Flush mount w/ guard
800P-S2C1B -Surface mount
800P-S2CGIB -Surface mount w/ guard

Relay:
700-ZBR520AZ1
700-ZBR100AZ1
Palm Buttons:
800P-F2CA -Flush mount
800P-F2CGA -Flush mount w/ guard
800P-S2C1A -Surface mount
800P-S2CGIA -Surface mount w/ guard

Figure 13

NEMA 2–Hand Control Diagrams (Continued)

Multi–station
2–Hand Control
Category 4 EN 574
Key switch is key removal in off position with only one key so only one station is active at a time

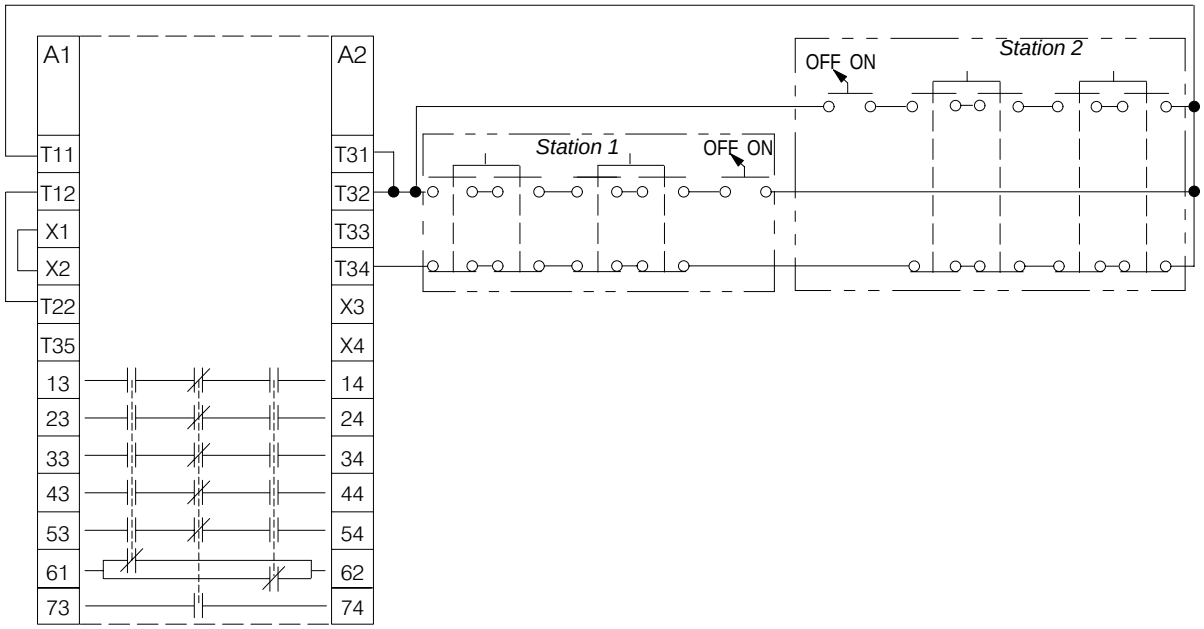

Multi–station
2–Hand variation 1:
Category 4 EN 574
w/ E–Stop controls

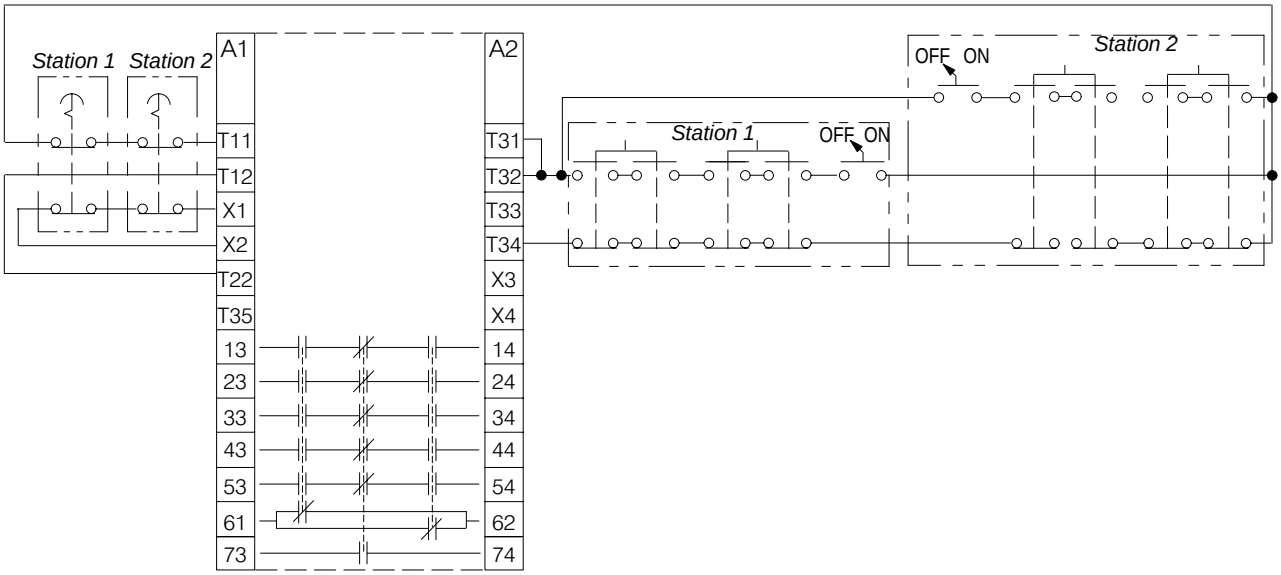

Figure 14

Expander Modules

Expander modules are used to increase the number of safety outputs. They are connected to and monitored by a safety relay. The number of expander modules that can be connected to a safety relay varies, depending on the application requirements. A sample circuit is shown below.

IEC Expander Module Diagrams

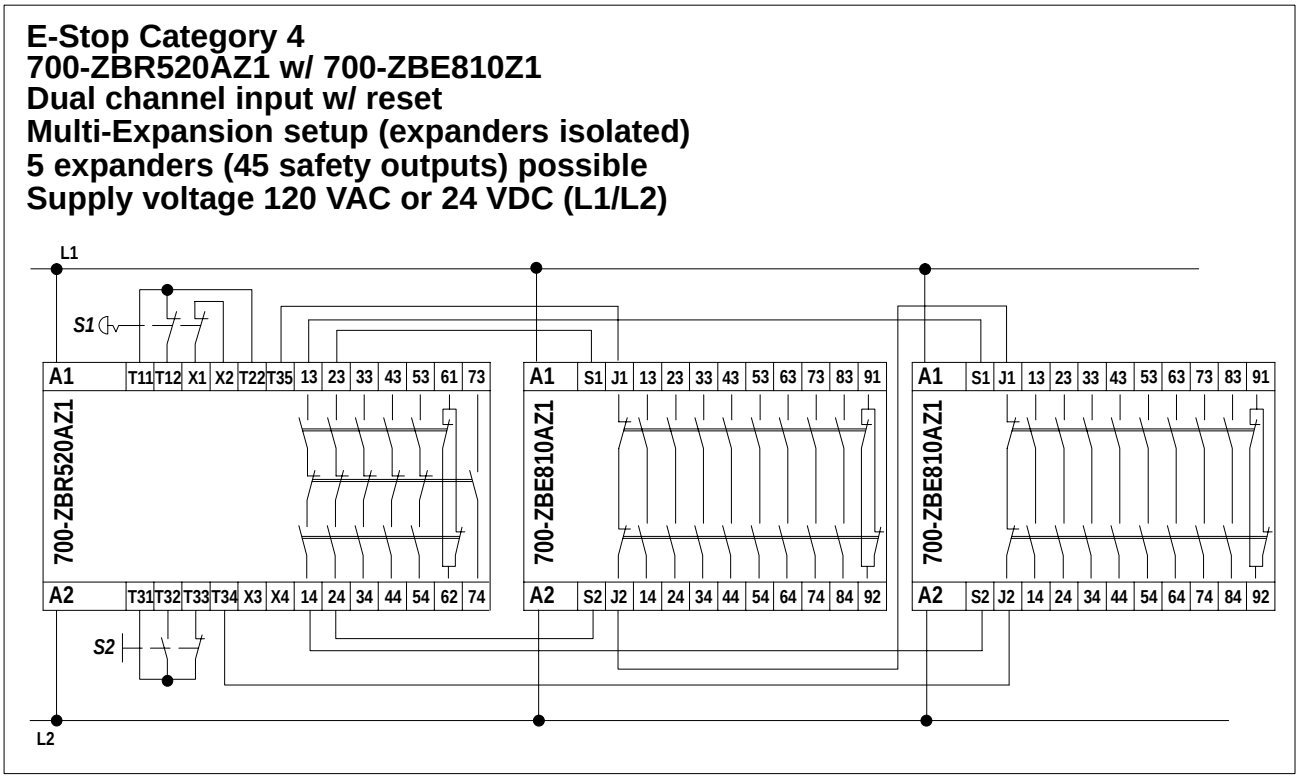

Figure 15

NEMA Expander Module Diagrams

E-Stop Category 4
700-ZBR520AZ1 w/ 700-ZBE810Z1
Dual channel input w/ reset
Multi-Expansion setup (expanders isolated)
5 expanders (45 safety outputs) possible
Supply voltage 120 VAC or 24 VDC (L1/L2)

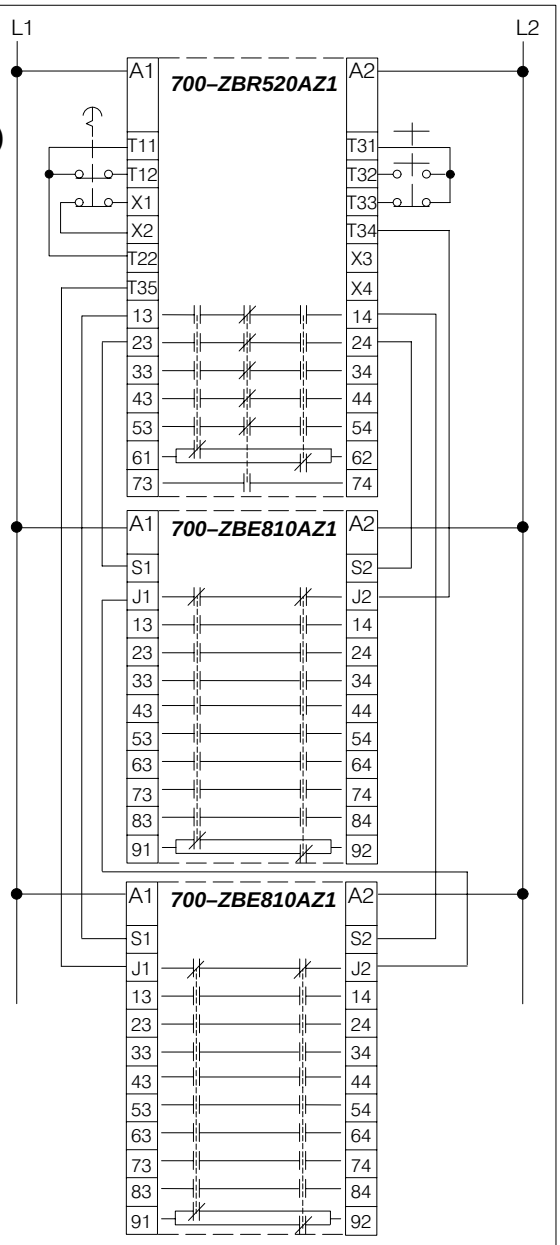

Figure 16

Additional Applications

IEC Multi-station Diagrams

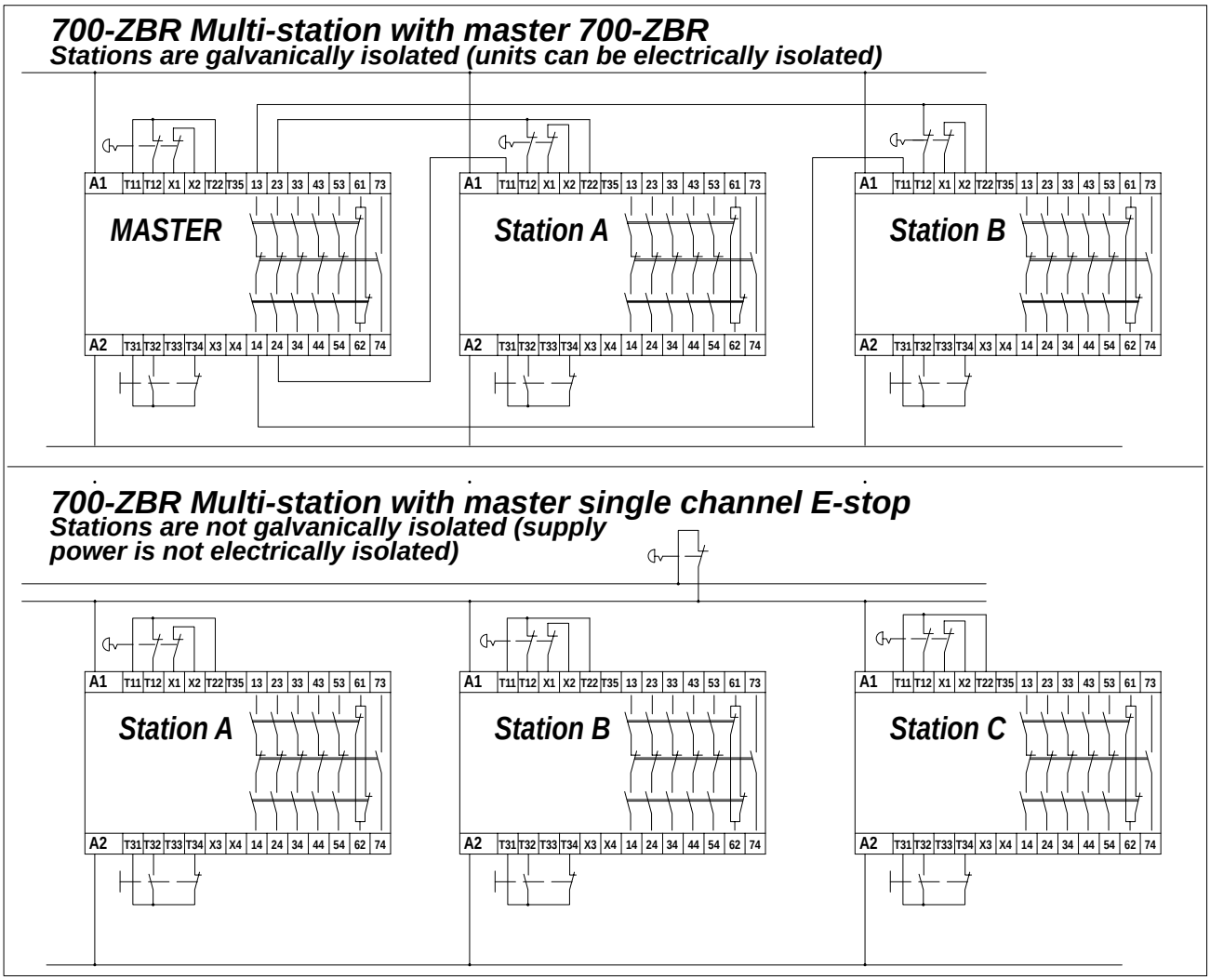

Figure 17

Higher Current Applications and Additional Safety Outputs (Auxiliary Relays)

Safety relays must be applied according to recommendations for load and life. If an application has a higher current than what is recommended, it is advisable to consider using two auxiliary relays with positive–guided contacts, that are rated to switch the load. Two relays are necessary to satisfy requirements for redundancy. The status of the auxiliary relays is monitored by a normally closed contact from each auxiliary relay in a feedback loop to the safety relay. The auxiliary relay coils are monitored and energized by the safety relay. The load is monitored and energized by a normally open contact in series from each auxiliary relay.

Two auxiliary relays provide an additional three safety outputs. With auxiliary contacts (adder decks), it is possible to obtain up to eleven additional safety outputs. The current limit for the auxiliary relays will depend on the type of relay selected. Allen–Bradley 700–P NEMA relays can handle up to 20 Amps per pole for eleven additional safety outputs. Typical IEC relays, like the Allen–Bradley 700–CF and 700–M, can handle up to 10 Amps per pole for 7 to 12 additional outputs.

IEC Diagrams

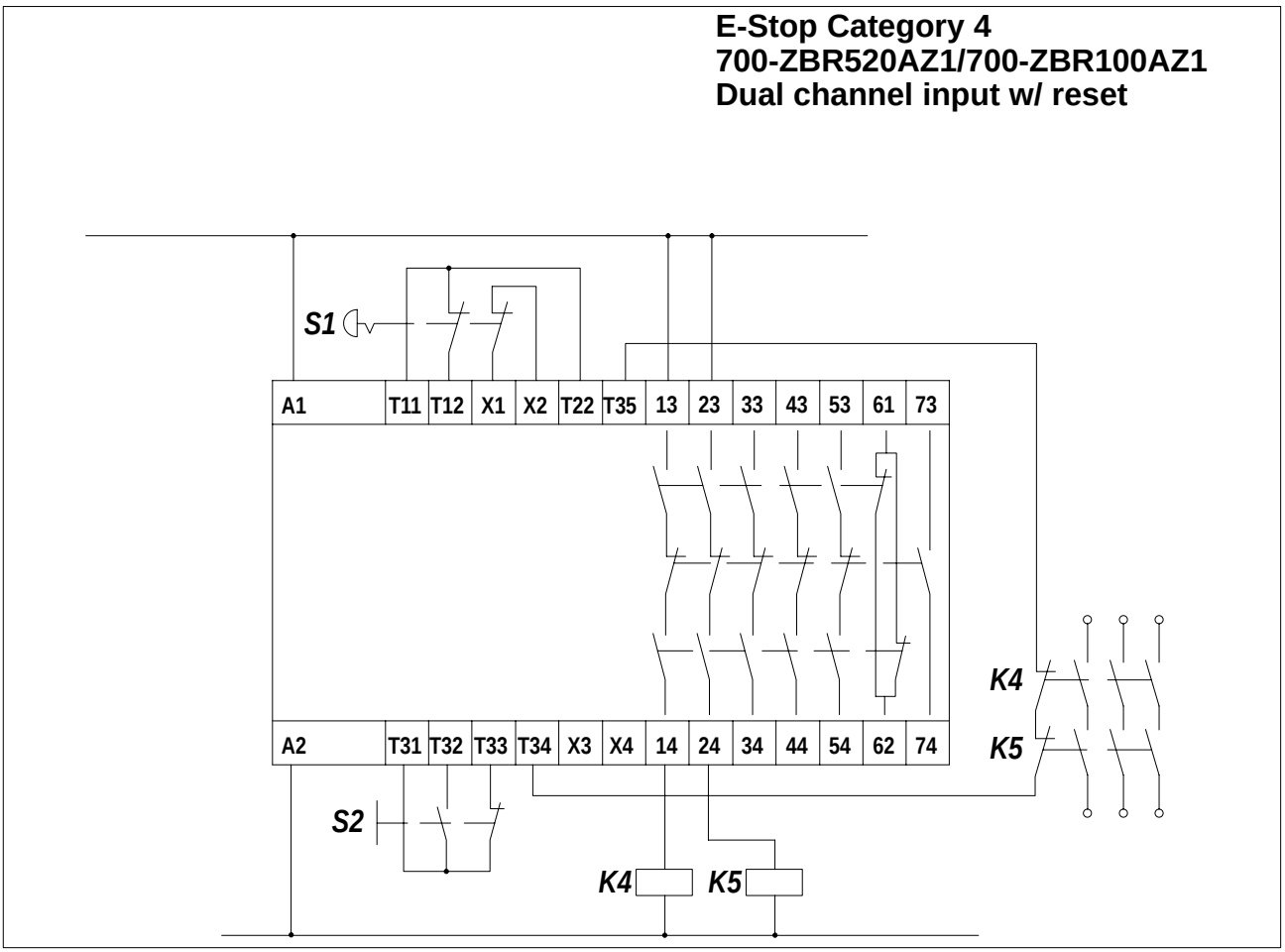

Figure 18

NEMA Diagrams

E-Stop Category 4
700-ZBR520AZ1/700-ZBR100AZ1
Dual channel input w/ reset

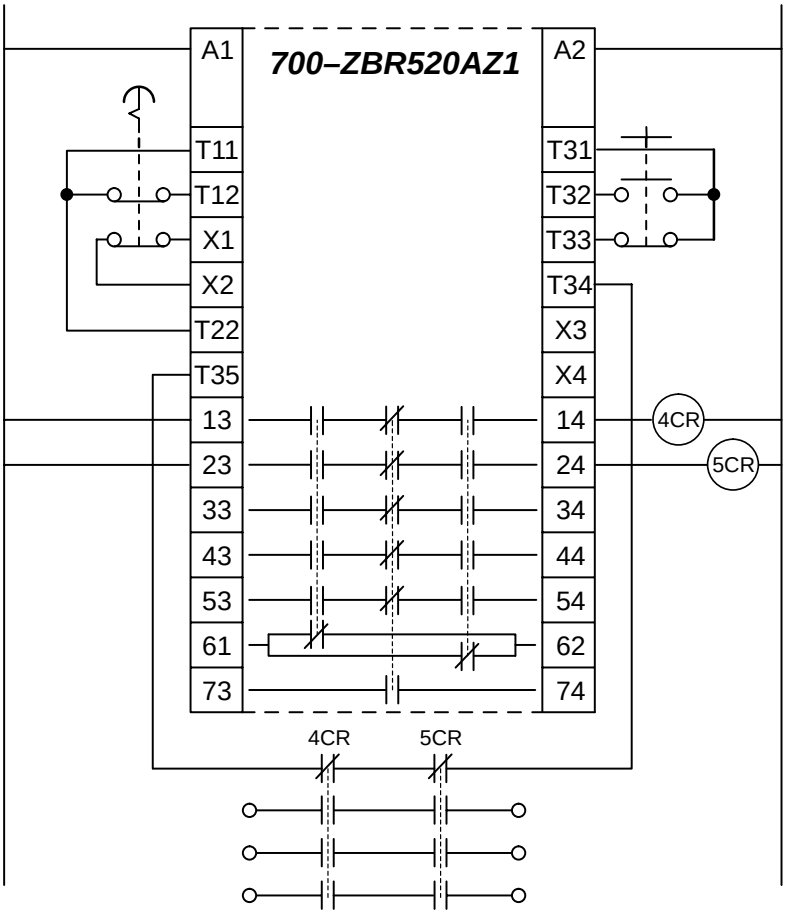

Figure 19

NEMA Diagrams

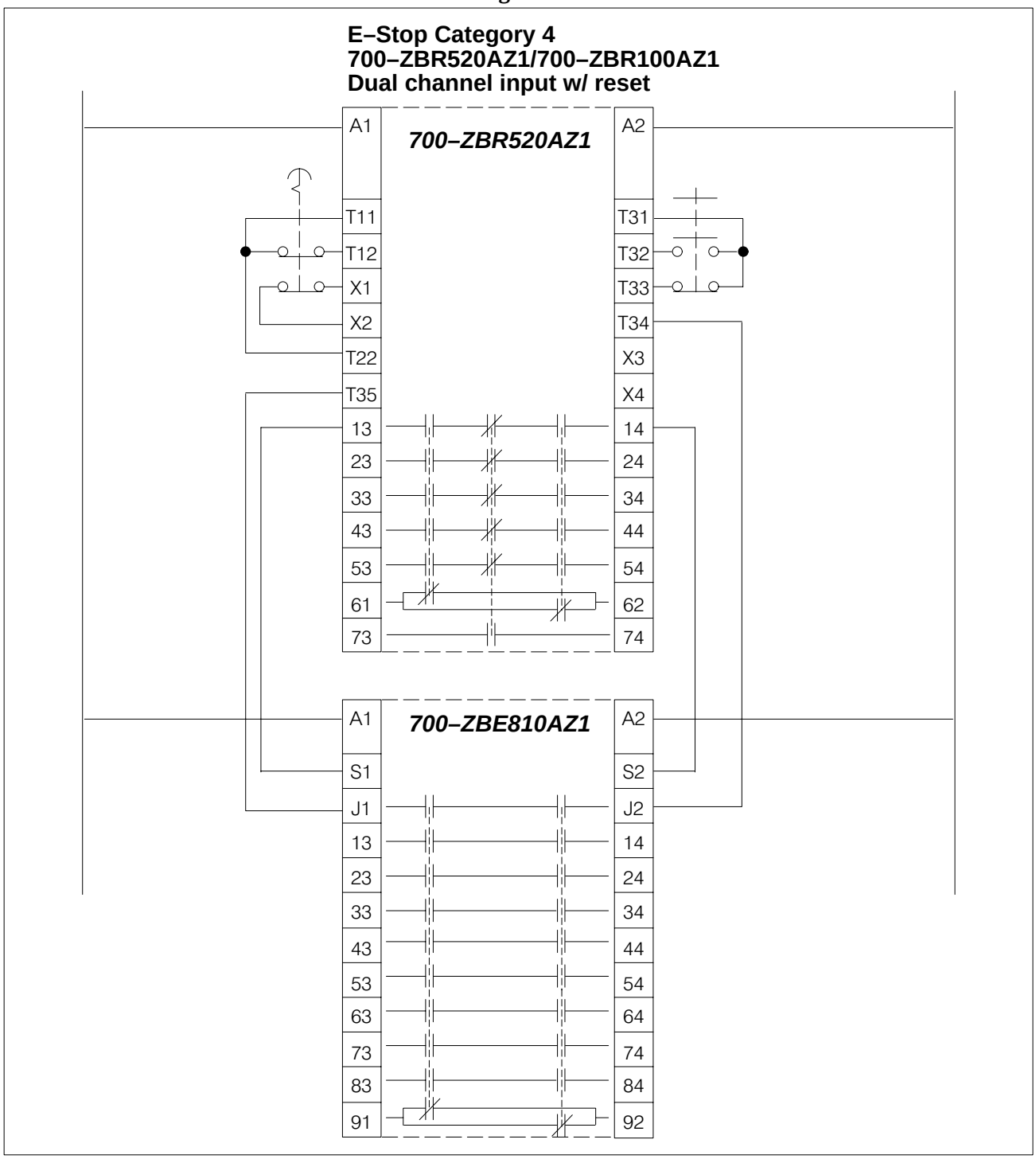

Figure 20

Connecting to DeviceNet

It is possible to monitor safety relay functions on DeviceNet by connecting to a Bulletin 100 DeviceNet Starter Auxiliary. This module monitors the status of the input devices (E–Stop, Start/Reset Button) and the safety relay, depending on the module selected.

IEC Diagram

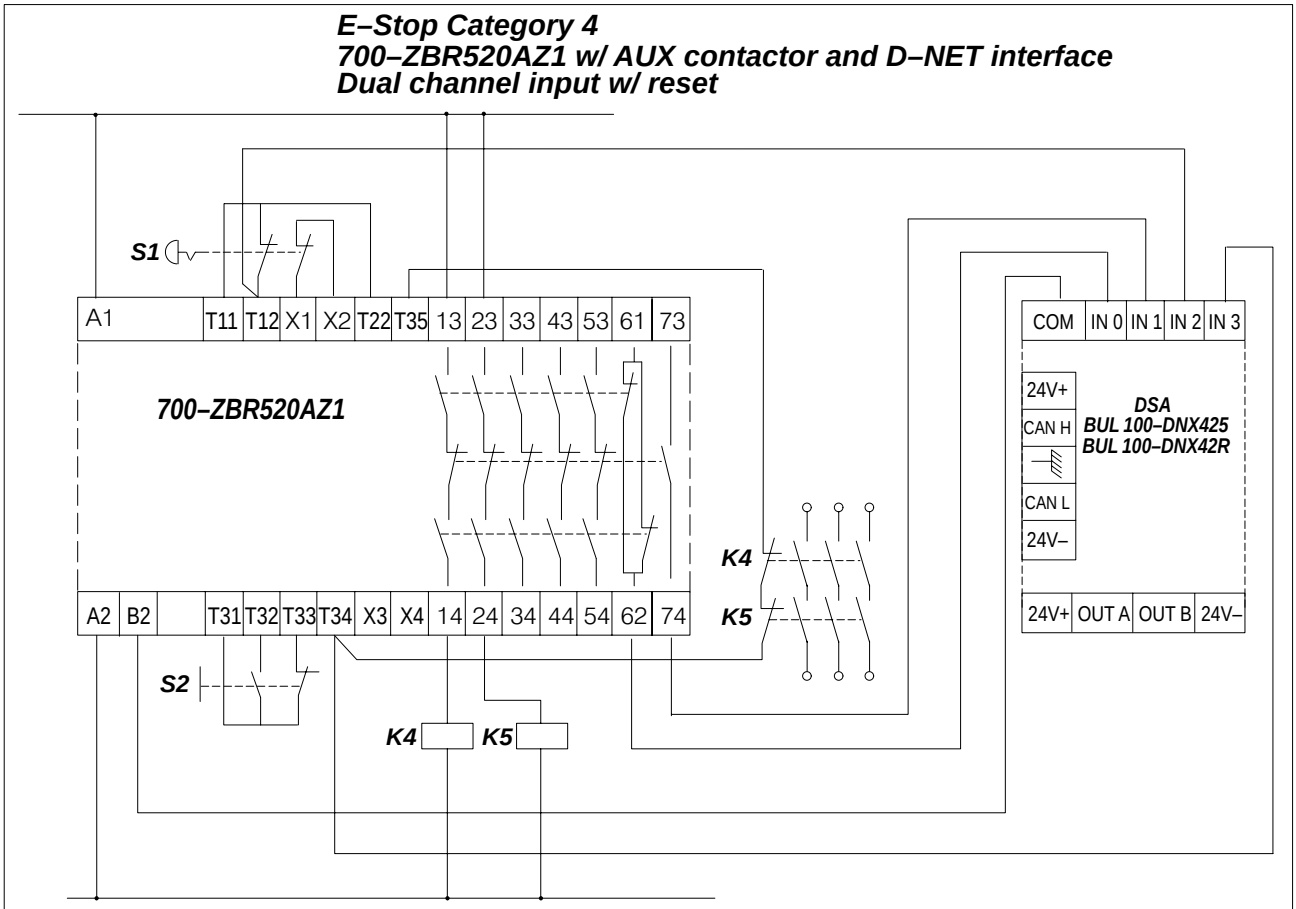

Conditions	IN 3	IN 2	IN 1	IN 0
Running	1	1	0	0
Running with tie–down reset	0	1	0	0
E–Stop pressed	0	0	0	1
E–Stop reset	1	1	1	1
Relay or Aux welded (E–Stop Reset)	1	1	0	1
Relay or Aux welded (E–Stop Reset w/ tie down reset)	0	1	0	1

Figure 21

Troubleshooting Guide for 700-ZBR520AZ1 and 700-ZBR100AZ1

Wiring Diagram and logic circuit for 700-ZBR520-- And 700-ZBR100--

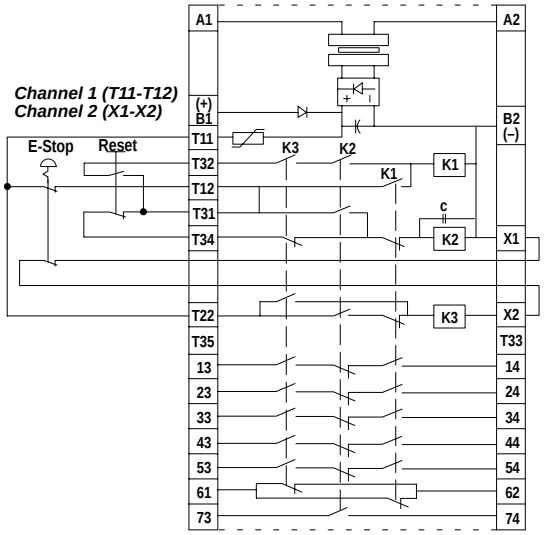

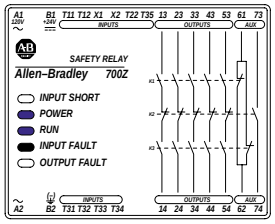

LEDs on: **Power, Run, Input fault**

Problem: **E-Stop reset Reset pressed and held or contact welded during present cycle**

Action: **Release or replace reset and cycle E-Stop and Reset**

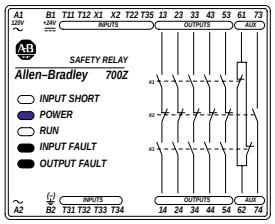

LEDs on: **Power, Input fault, Output fault**

Problem: **E-Stop reset Reset pressed/stuck or N.O. of reset welded**

Action: **Release or replace reset or contact block**

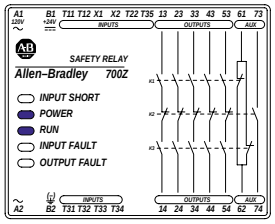

LEDs on: **Power, Run**

Problem: **E-Stop pressed Channel 1 (T11-T12) did not open or contact block shorted**

Action: **Clear short or replace contact block and cycle E-Stop.**

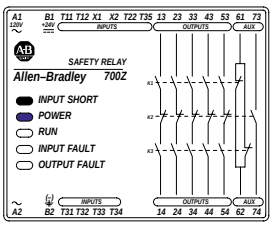

LEDs on: **Input short, Power**

Problem: **E-Stop reset Channels 1 and 2 shorted**

Action: **Correct short press E-Stop wait 30 sec reset E-Stop and press reset**

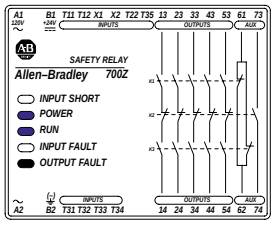

LEDs on: **Power, Run, Output fault**

Problem: **E-Stop reset Channels 1 (T11-T12) did not open or contact block shorted**

Action: **Clear short or replace contact block and cycle E-Stop**

Figure 22

Note: Green LEDs are represented in blue, and red LEDs are represented in black.

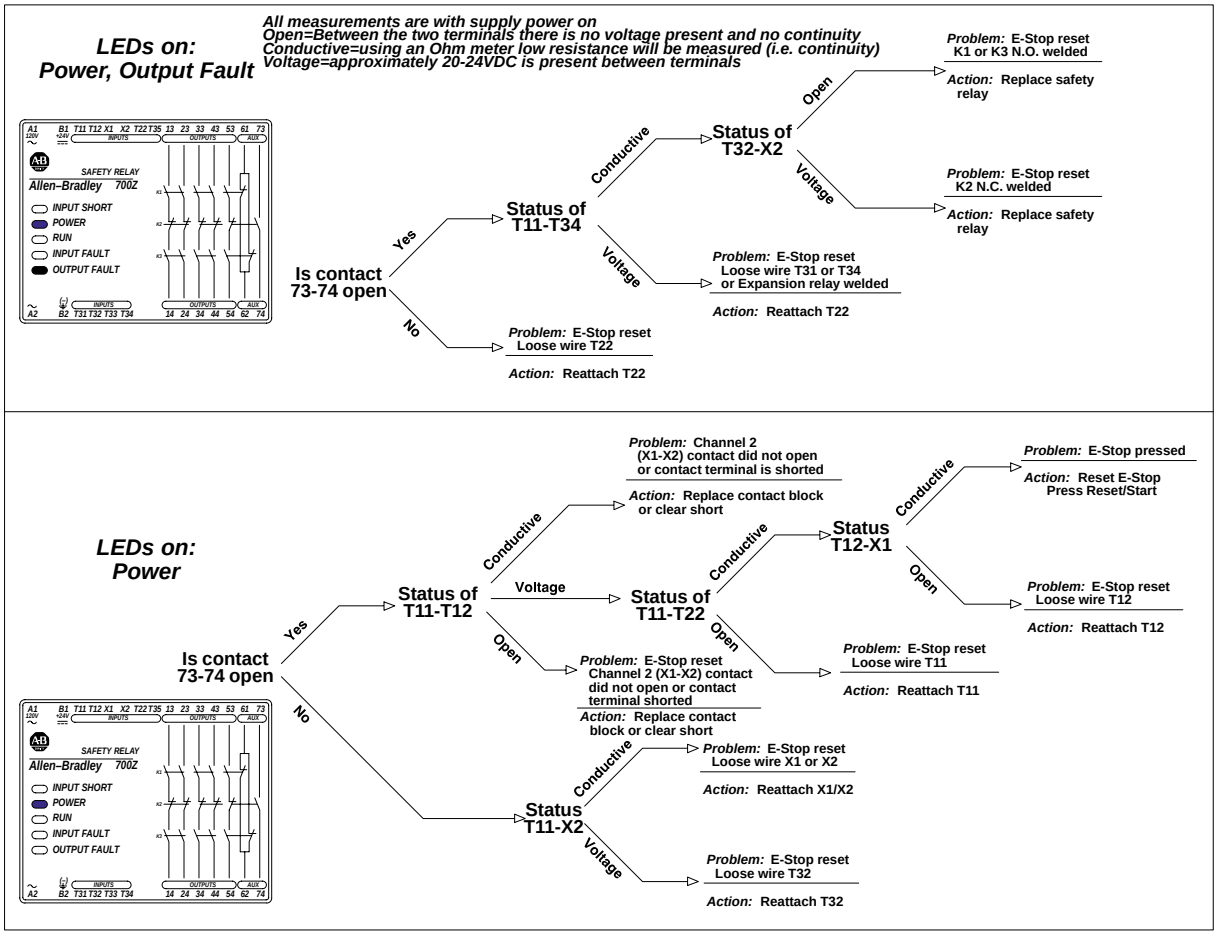

Figure 23

LEDs: Run and Fault Conditions for 700-ZBL220Z24

	Stop Reset						Stop Actuated			
Power LED	●	●	●	●	●	●	○	●	●	●
CH 1 LED	●	○	●	●	●	●	○	○	●	○
CH 2 LED	●	●	○	●	●	●	○	○	○	●
K1 LED	●	○	○	●	○	○	○	○	○	●
K2 LED	●	○	○	○	●	○	○	○	●	○
Condition	Proper Running Condition	Channel 1 Contacts May Be Open	Channel 2 Contacts May Be Open	Start/Reset Actuator Contacts May Be Welded	Safety Contacts May Be Welded	Waiting For Start/Reset Signal Expander or Auxiliary Contacts May Be Welded	Input Sort or No Power	Input Circuit Is Open	Channel 1 Contacts May Be Welded	Channel 2 Contacts May Be Welded
Action	None	Replace Channel 1 Contact Block	Replace Channel 2 Contact Block	Replace Safety Reset Contacts	Replace Safety Relay	Replace Expander or Auxiliary Relay	After Clearing Short, Power Must Be Off For 20 Seconds To Reset Fuse	Reset E–stop or Gate	Replace Channel 1 Contact Block	Replace Channel 2 Contact Block

Figure 24

Note: Green LEDs are represented in blue, and red LEDs are represented in black.

Overview of Safety Standards

Both the North American and European markets have requirements for incorporating safety into machine designs. This section provides an overview of some North American and European Standards that apply when designing for machine safety. It is not exhaustive, and is not intended to be used as a complete document for safety standards. The organizations and companies that provide copies of the standards and directives (as of September, 1997) are listed at the end of this section.

North America

OSHA 1910.211
(62) Safety System means the integrated total system ... designed, constructed and arranged to operate together as a unit, such that a single failure or single operating error will not cause injury to personnel due to point of operation hazards.

ANSI B11.19
2.12 Control Reliability – A method of ensuring the integrity of performance of guards, devices and control systems.

5.5.1 When required by the performance requirements of the safeguarding, the device, system or interface shall be designed, constructed, and installed such that a single component failure within the device, interface or system shall not prevent normal stopping action from taking place but shall prevent a successive machine cycle.

ANSI B11.20
6.13 Control Component Failure Protection (Control Reliability) – The control system shall be designed, constructed, and installed such that a single control component failure within the system does not prevent stopping action from taking place but will prevent successive system cycles until the failure has been corrected.

Europe

In the European market, to conform to the machinery safety directive, it is necessary to review the appropriate EN standards that apply to machine design, assess the risk associated with the particular machine, and design safeguards accordingly. The EN standards are divided into three groups, according to the subjects that they cover, and they are hierarchical in nature.

- Type A Standards
  - Fundamental Safety Standards
  - Apply to all types of machinery
  - The two most important: EN 292–1/2 *Safety of machinery*, and EN 1050 *Safety of machinery – Principles for risk assessment*
- Type B Standards
  - Group standards
  - Deal with only one safety aspect or one type of safety–related device
  - The two most encompassing: EN 60204–1 *Safety of machinery – Electrical equipment of machines*, and EN 954–1 *Safety of machinery – Safety related parts of control systems*

- Type C Standards
  - Detailed safety requirements for specific types of machines
  - Based on applicable sections of relevant Type A and Type B standards, but may deviate where appropriate or necessary

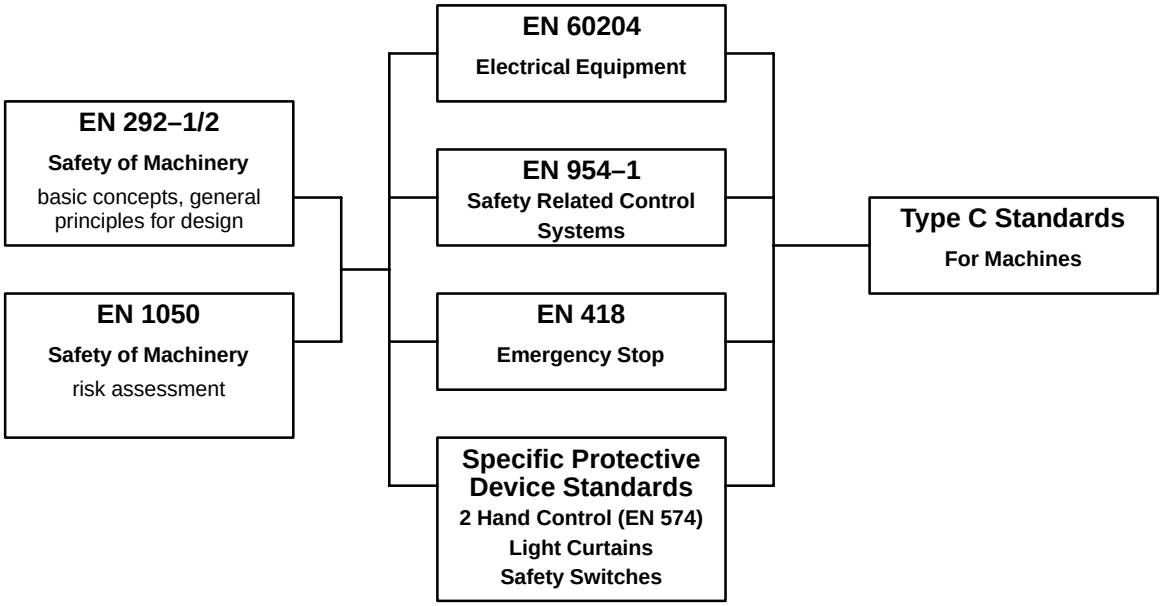

The machine designer must perform the risk assessment. EN 1050 describes principles for a consistent, systematic procedure for risk assessment, and it gives guidance for making decisions during the design of machinery. The five basic components (or steps) of EN 1050 are:

- Determination of the limits of the machinery. Refer to EN 292.
- Hazard identification. Refer to Annex A of EN 1050 for examples of hazards; Annex B describes methods for the systematic analysis of hazards.
- Risk estimation.
- Risk evaluation – determine if risk reduction is required or whether safety has been achieved. If risk reduction is required, reduce risk by design, safeguarding and/or informing operators.
- Documentation – demonstrate the procedure followed and results achieved.

EN 954 provides guidelines for risk estimation, and categories of design requirements, depending on the level of risk.

Guidelines for Risk Estimation from EN 954–1, Annex B

Estimate the severity (possible degree of harm) by considering the:

- Severity of injury
  S1 Slight (normally reversible) injury or damage to health
  S2 Serious injury or damage to health (normally irreversible, including death)

Estimate the probability of harm occurring by considering the:

- Frequency and duration of exposure:
  F1 Seldom to quite often and/or short exposure time
  F2 Frequent to continuous and/or long exposure time

- Possibility to avoid or limit the harm
  P1 Possible under specific conditions
  P2 Scarcely possible

When a hazardous situation occurs, P1 should only be selected if there is a realistic chance of avoiding an accident or of significantly reducing its effect. P2 should be selected if there is almost no chance of avoiding the hazard

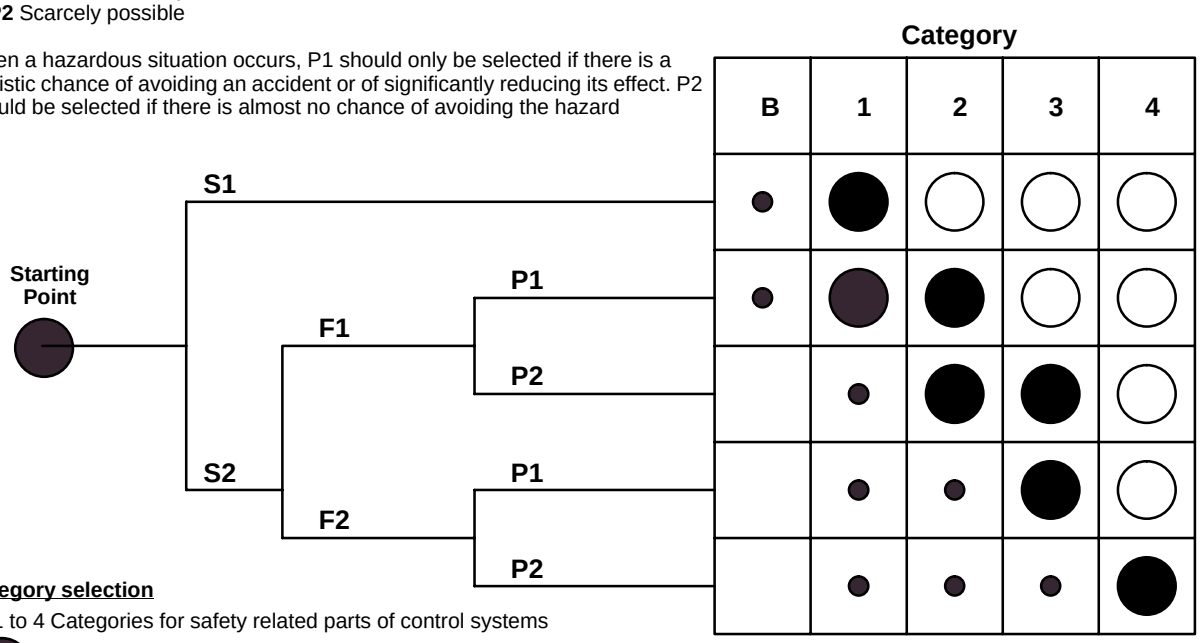

Category selection

B, 1 to 4 Categories for safety related parts of control systems

Preferred categories for reference points

Possible categories which can require additional measures

Measures which may be overdimensioned for the relevant risk

Figure 25

Guide to The Categories for Safety–Related Parts of Control Systems from EN 954–1

Category	Basic Requirements	What is Achieved		Factors Affecting The Degree of Performance	Typical Techniques	Validation Methods
		At Least	At Most			
B	Components able to withstand expected influences.	Reliability for normal operation.	Reliability for normal operation.	Availability of standards, test data, etc.	Use of materials and components conforming to recognized standards, etc.	Check specifications for conformity and suitability.
1	*Requirements of category B together with*: Use of well–tried (e.g. tested or proven) components and safety principles.	Enhanced reliability of the safety function from that of a "normal" device or system.	Elimination of fault possibilities (i.e., **high level of safety performance**).	The simplicity or complexity of the system and principle (i.e., fewer components means fewer potential modes of failure and more viable validation).	• Positive mode operation, life testing, oriented failure mode (e.g., defined weak link) – relevant to simple (e.g. mechanical) equipment. • Validation measures are usually too involved or not possible for more complex (e.g., electronic) equipment.	• Fault analysis (e.g., Failure Mode and Effects Analysis or Fault Tree Analysis) • Testing. • Checking of safety margins.
2	*Requirements of category B and the use of well–tried safety principles together with*: A safety function check at machine start–up and periodically if required.	Machine can only start when system is safe.	Machine can only start up when system is safe and faults will be detected by a frequent check (i.e., **high level of safety performance**).	The frequency and nature of the check (i.e., more frequent checks allows less time for faults to remain undetected).	Simulation of device actuation and functional check by machine control system or dedicated monitoring unit with start interlock.	Theoretical analysis and/or testing.
3	*Requirements of category B and the use of well–tried safety principles together with*: A single fault will not cause a loss of safety function.	• Detection of some single, safety critical faults at the next demand on the safety function. • Safety–critical faults can accumulate between demands on the safety function. • Non–detected, non–safety critical faults can accumulate and cause loss of safety function.	Detection of *ALL* single faults (safety–critical and non–safety critical) as the occur (i.e., **high level of safety performance** when it is not feasible to expect multiple independent faults to accumulate within the checking period).	The frequency and nature of the check (i.e., more frequent checks allows less time for faults to accumulate).	• Dual contact (or two separate) devices linked by two circuits to a separate unit which compares operation of each circuit at change of state. • Suitable where some faults can not be prevented and there is relatively frequent actuation – particularly relevant to electromechanical technology.	Theoretical analysis and/or testing.
4	*Requirements of category B and the use of well–tried safety principles together with*: Assimilation of faults will not cause a loss of safety function. (the number of faults in accumulation to be considered is normally two but may be more depending on the application circumstances).	• Detection of single faults in time to prevent the loss of safety function. • Foreseeable combinations of faults will not cause loss of safety functions.	• Detection of single faults immediately. • No combination of faults will cause loss of safety functions (this is the ideal but rarely achieved in practice). **High level of safety performance.**	The simplicity or complexity of the system and principle (i.e., fewer or simpler components mean fewer fault combination permutations).	Dynamic techniques. Relevant to equipment which must be complex to perform its primary task. Particularly relevant to electronic technology.	Theoretical analysis and/or testing.

Organizations

The organizations and companies that provide copies of the standards and directives (as of September, 1997):

- ANSI – American National Standards Institute
  11 West 42nd Street New York, NY 10036 USA.
  Phone: 1–212–642–4900.
  Fax (for ordering): 1–212–302–1286.
  Fax (general): 1–212–398–0023.
  Internet: www.ansi.org
  Comments: Now accepts credit cards. ANSI is also the source of IEC & ISO standards, CEN and CENELEC pre–standards (prEN).
- International Electromechanical Commission (IEC)
  3, rue de Varembe P.O. Box 131 CH 1211 Geneva 20 SWITZERLAND
  Phone: 011–41–22–919–0211
  Fax: 011–41–22–919–0300
  Internet: www.iec.ch/
  Comments: Direct source of IEC standards. Will accept credit cards as part of phone order.
- International Organization for Standardization (ISO)
  1, rue de Varembe CH 1211 Geneva 20 SWITZERLAND
  Phone: 011–41–22–749–0111
  Fax: 011–41–22–733–3430
  Internet: www.iso.ch/
  Comments: Direct source of ISO standards. Will accept credit cards as part of phone order.
- British Standards Institution
  389 Chiswick High Road, London W4 4AL UNITED KINGDOM
  Phone: 011–44–181–996–9000
  Fax: 011–44–181–996–7400
  Internet: www.bsi.org.uk/
  Comments: Source of CEN and CENELEC standards once they are published (English language only).
- Global Engineering Documents
  7730 Carondelet Ave., Suite 407, St. Louis, MO 63105
  Phone: 1–800–854–7179
  Fax: 1–314–726–6418
  Comments: Source for a variety of standards.
- CEN – European Committee for Standardization Central Secretariat
  rue de Stassart 36, B–1050, Brussels, Belgium
  Phone: 011–32–2–550–0819
  Fax: 011–32–2–550–0811
  Internet: http://tobbi.iti.is/cen/welcome.html
- CENELEC – European Committee for Electrotechnical Standardization Central Secretariat
  rue de Stassart 35, B–1050, Brussels, Belgium
  Phone: 011–32–2–51–96–919
  Fax: 011–32–3–51–96–871

Specifications and Approximate Dimensions

	700-ZBR100AZ1	700-ZBR520AZ1	700-ZBE300AZ1	700-ZBE810AZ1	700-ZBL220Z24
Electrical Ratings					
Supply Voltage, IEC 38	AC: 120V, –15% +10% AC: 24V, –20% +10% DC: 24V, –20% +10%	AC: 120V, –15% +10% AC: 24V, –20% +10% DC: 24V, –20% +10%	AC: 120V, –15% +10% AC: 24V, –20% +10% DC: 24V, –20% +10%	AC: 120V, –15% +10% AC: 24V, –20% +10% DC: 24V, –20% +10%	– DC: 24V, –20% +10% –
Power Consumption Nominal Input 120V AC 24V DC 24V AC	3.7VA, 2.9W 1.5W 1.55W	6.1VA, 5.7W 3.5W 3.6W	3.8VA, 3.6W 2.25W 2.3W	6.2VA, 5.7W 3.5W 3.6W	– 2.6W –
Frequency	AC: 50–60Hz	AC: 50–60Hz	AC: 50–60Hz	AC: 50–60Hz	AC: 50–60Hz
Ripple	DC: 10%	DC: 10%	DC: 10%	DC: 10%	DC: 10%
Internal Control Voltage	24V DC	24V DC	24V DC	24V DC	24V DC
Number of Safety Circuits	1	5	3	8	2
Safety Contact Maximum Voltage	1 ~ 50/60Hz 120/240V; DC 24V	1 ~ 50/60Hz 120/240V; DC 24V	1 ~ 50/60Hz 120/240V; DC 24V	1 ~ 50/60Hz 120/240V; DC 24V	1 ~ 50/60Hz 120/240V; DC 24V
Safety Contact Minimum Load	24V AC/DC, 20mA	24V AC/DC, 20mA	24V AC/DC, 20mA	24V AC/DC, 20mA	24V AC/DC, 20mA
Safety Contact Rating Load (Inductive) (IEC 947–5–1)	C300, AC15, 120V, 1.5A C300, AC15, 240V, 0.75A DC–13, 24V, 2A	C300, AC15, 120V, 1.5A C300, AC15, 240V, 0.75A DC–13, 24V, 2A	C300, AC15, 120V, 1.5A C300, AC15, 240V, 0.75A DC–13, 24V, 2A	C300, AC15, 120V, 1.5A C300, AC15, 240V, 0.75A DC–13, 24V, 2A	C300, AC15, 120V, 1.5A C300, AC15, 240V, 0.75A DC–13, 24V, 2A
Safety Contact Maximum Load (Non–Inductive) (IEC 947–1–1)	AC–1, 240V/6A/1440VA DC-12, 24V/6A/144W	AC–1, 240V DC–12, 24V ❶	AC–1, 240V DC–12, 24V ❷	AC–1, 240V DC–12, 24V ❸	AC–1, 240V/5A/1200VA DC-12, 24V/5A/120W
Number of Auxiliary (Data) Circuits	0	2	0	1	2
Auxiliary Contact Maximum Voltage	1 ~ 50/60 Hz 24V; 24V DC	1 ~ 50/60 Hz 24V; 24V DC	1 ~ 50/60 Hz 24V; 24V DC	1 ~ 50/60 Hz 24V; 24V DC	1 ~ 50/60 Hz 24V; 24V DC
Auxiliary Contact Rating Designation (IEC 947–5–1)	–	AC15, 24V, 1A Max DC13, 24V, 1A Max	–	AC15, 24V, 1A Max DC13, 24V, 1A Max	AC15, 24V, 1A Max DC13, 24V, 1A Max
Auxiliary Maximum Current (Non–Inductive)	–	1A	–	1A	1A
Auxiliary Contact Minimum Load	AC/DC: 24V, 20mA	AC/DC: 24V, 20mA	AC/DC: 24V, 20mA	AC/DC: 24V, 20mA	5V DC, 10mA
Wire Gauge	24–14 AWG (0.2–2.5mm^2)	24–14 AWG (0.2–2.5mm^2)	24–14 AWG (0.2–2.5mm^2)	24–14 AWG (0.2–2.5mm^2)	24–14 AWG (0.2–2.5mm^2)
Output Protection Fuse Needed	Select fuse according to values ❹	Select fuse according to values ❶	Select fuse according to values ❷	Select fuse according to values ❸	Select fuse according to values ❺
Electronic Fuse Reset Time	20 sec.	20 sec.	20 sec.	20 sec.	20 sec.
Rated Impulse Voltage U_{imp}	Overvoltage cat. III/2.5 kV	Overvoltage cat. III/2.5 kV	Overvoltage cat. III/2.5 kV	Overvoltage cat. III/2.5 kV	Overvoltage cat. III/2.5 kV
Rated Insulation Voltage U_i	300V	300V	300V	300V	300V
Pick Up (Start Button)	90 msec	190 msec	200 msec❻	200 msec❻	13 msec
Drop Out (E-Stop Button)	15 msec	20 msec	35 msec❻	40 msec❻	13 msec
2 Hand Control Pick-Up pr EN 574 Type III	< 0.5 sec	< 0.5 sec	N/A	N/A	N/A

❶ Refer to Table A on page 37 for more detailed information.
❷ Refer to Table B on page 37 for more detailed information.
❸ Refer to Table C on page 37 for more detailed information.
❹ Refer to Table D on page 37 for more detailed information.
❺ Refer to Table E on page 37 for more detailed information.
❻ Total time including the safety relay that must be connected to the expander unit. These are maximum times based on a 90 mm, 700–ZBR520AZ1 Safety Relay.

	700-ZBR100AZ1	700-ZBR520AZ1	700-ZBE300AZ1	700-ZBE810AZ1	700-ZBL220Z24
Environmental					
Operating Temperature, Ambient	–25°C to 55°C –13°F to 131°F	–25°C to 55°C –13°F to 131°F	–25°C to 55°C –13°F to 131°F	–25°C to 55°C –13°F to 131°F	–25°C to 55°C –13°F to 131°F
Humidity, Non-Condensing	95% RH	95% RH	95% RH	95% RH	95% RH
Storage Temperature	–30°C to 85°C –22°F to 185°F	–30°C to 85°C –22°F to 185°F	–30°C to 85°C –22°F to 185°F	–30°C to 85°C –22°F to 185°F	–30°C to 85°C –22°F to 185°F
Mounting Method, EN 50022	On 35mm DIN Rail	On 35mm DIN Rail	On 35mm DIN Rail	On 35mm DIN Rail	On 35mm DIN Rail
Permitted Mounting Position	Any	Any	Any	Any	Any
Terminal Protection, IEC 529	IP2X	IP2X	IP2X	IP2X	IP2X
Housing Protection, IEC 529	IP40	IP40	IP40	IP40	IP40
Vibration - IEC 68-2-6	10–200Hz, 5G	10–200Hz, 10G	10–200Hz, 5G	10–200Hz, 10G	10–200Hz, 5G
Shock/Bump - IEC 68-2-29	11ms, 10G/16ms, 10G	11ms, 10G/16ms, 10G	11ms, 10G/16ms, 10G	11ms, 10G/16ms, 10G	11ms, 10G/16ms, 10G
Insulation Coordination	Degree of Pollution 2	Degree of Pollution 2	Degree of Pollution 2	Degree of Pollution 2	Degree of Pollution 2
Mechanical Operations IEC 947–5	$> 1 \times 10^7$ Switching Operations	$> 1 \times 10^7$ Switching Operations	$> 1 \times 10^7$ Switching Operations	$> 1 \times 10^7$ Switching Operations	$> 1 \times 10^7$ Switching Operations
Construction					
Housing Material	Polyester PBT (UL 94V-0)	Polyester PBT (UL 94V-0)	Polyester PBT (UL 94V-0)	Polyester PBT (UL 94V-0)	Polyester PBT (UL 94V-0)
Safety Contact Material	AgCdO + Gold Flash	AgCdO + Gold Flash	$AgSnO_2$ + Gold Flash	AgCdO + Gold Flash	$AgSnO_2$ + Gold Flash
Auxiliary Contact Material	AgCdO + Gold Flash	AgCdO + Gold Flash	$AgSnO_2$ + Gold Flash	AgCdO + Gold Flash	Ag Alloy
Weight	395 Grams	780 Grams	325 Grams	630 Grams	225 Grams
Width	45mm (1.77")	90mm (3.54")	45mm (1.77")	90mm (3.54")	45mm (1.77")
Height	94mm (3.70")	94mm (3.70")	94mm (3.70")	94mm (3.70")	94mm (3.70")
Depth	103mm (4.06")	103mm (4.06")	103mm (4.06")	103mm (4.06")	103mm (4.06")

Table A

Total Number of Contacts Used	1 contact 8A	2 contacts x 7A	3 contacts x 5.5A	4 contacts x 5A	5 contacts x 4.5A
Non-Inductive Load	AC-1, 240V/8A/1920VA DC-12, 24V/8A/192W	AC-1, 240V/7A/1680VA DC-12, 24V/7A/168W	AC-1, 240V/5.5A/1320VA DC-12, 24V/5.5A/132W	AC-1, 240V/5A/1200VA DC-12, 24V/5A/120W	AC-1, 240V/4.5A/1080VA DC-12, 24V/4.5A/108W
Non-Inductive Load Fuse	8A Quick-Blow (F)	6.3A Quick-Blow (F)	5A Quick-Blow (F)	5A Quick-Blow (F)	4A Quick-Blow (F)
Inductive Load Fuse	1.6A Slow-Blow (T) for C300, AC15 Type (Inductive loads other than C300, AC15 type may require a different fuse.)				

Table B

Total Number of Contacts Used	1 contact 7A	2-3 contacts x 6A
Non-Inductive Load	AC-1, 240V/7A/1680VA DC-12, 24V/7A/168W	AC-1, 240V/6A/1440VA DC-12, 24V/6A/144W
Non-Inductive Load Fuse	6.3A Quick-Blow (F)	6.3A Quick-Blow (F)
Inductive Load Fuse	1.6A Slow-Blow (T) for C300, AC15 Type (Inductive loads other than C300, AC15 type may require a different fuse.)	

Table C

Total Number of Contacts Used	1 contact 8A	2 contacts x 7A	3-4 contacts x 6A	5-6 contacts x 5A	7-8 contacts x 4.5A
Non-Inductive Load	AC-1, 240V/8A/1920VA DC-12, 24V/8A/192W	AC-1, 240V/7A/1680VA DC-12, 24V/7A/168W	AC-1, 240V/6A/1440VA DC-12, 24V/6A/144W	AC-1, 240V/5A/1200VA DC-12, 24V/5A/120W	AC-1, 240V/4.5A/1080VA DC-12, 24V/4.5A/108W
Non-Inductive Load Fuse	8A Quick-Blow (F)	6.3A Quick-Blow (F)	6.3A Quick-Blow (F)	5A Quick-Blow (F)	4A Quick-Blow (F)
Inductive Load Fuse	1.6A Slow-Blow (T) for C300, AC15 Type (Inductive loads other than C300, AC15 type may require a different fuse.)				

Table D

Non-Inductive Load Fuse	6.3A Quick-Blow (F)
Inductive Load Fuse	1.6A Slow-Blow (T) for C300, AC15 Type (Inductive loads other than C300, AC15 type may require a different fuse.)

Table E

Non-Inductive Load Fuse	5A Quick-Blow (F)
Inductive Load Fuse	1.6A Slow-Blow (T) for C300, AC15 Type (Inductive loads other than C300, AC15 type may require a different fuse.)

Approximate Dimensions

Dimensions are shown in millimeters (inches). Approximate dimensions are not intended for manufacturing purposes.

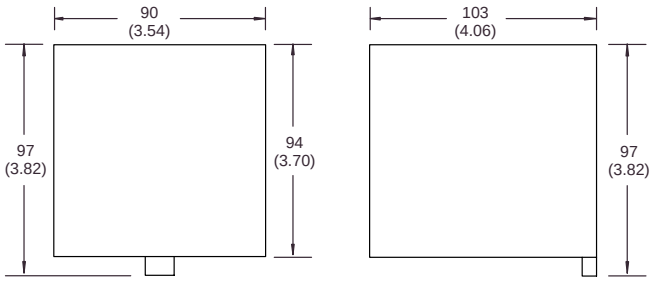

Front View *Side View*

Cat. Nos. 700-ZBR520AZ1 and 700-ZBE810AZ1

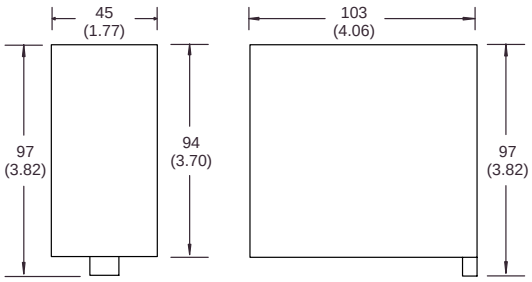

Front View *Side View*

Cat. Nos. 700-ZBR100AZ1, 700-ZBL220Z24 and 700-ZBE300AZ1

Appendix

Utilization Category Table from EN 947–5–1

Verification of Making and Breaking Capacities of Switching Elements Under Normal Conditions Corresponding to The Utilization Categories❶

Utilization Category	Normal Condition of Use								
	Make❷			Break❷			Number and Rate of Making and Breaking Operations		
	I/I_e	U/U_e	cos ψ	I/I_e	U/U_e	cos ψ	Number of Operating Cycles❸	Operating Cycles per Minute	On–time (s)❺
AC–12	1	1	0.9	1	1	0.9	6050	6	0.05
AC–13❻	2	1	0.65	1	1	0.65	6050	6	0.05
AC–14❻	6	1	0.3	1	1	0.3	6050	6	0.05
AC–15❻	10	1	0.3	1	1	0.3	6050	6	0.05
DC			$T_{0.95}$			$T_{0.95}$			
DC–12	1	1	1ms	1	1	1ms	6050	6	0.05❺
DC–13	1	1	6 *P*❹	1	1	6 *P*❹	6050	6	0.05❺
DC–14❻	10	1	15ms	1	1	15ms	6050	6	0.05❻

I_e	Rated operational current	$P=U_eI_e$	Steady–state power consumption, in watts
U_e	Rated operational voltage	I	Current to be made or broken
$T_{0.95}$	Time to reach 95% of the steady–state current, in milliseconds	U	Voltage before make

❶ See Sub–clause 8.3.3.5.2
❷ For tolerances on test quantities, see Sub–clause 8.3.2.2
❸ The first 50 operating cycles shall be run at U/U_e=1.1 with the loads set at U_e.
❹ The value "6x*P*" results from an empirical relationship which is found to represent most DC. magnetic loads to an upper limit of *P*=50W, viz. 6x*P*=300ms. Loads having power–consumption greater than 50 W are assumed to consist of smaller loads in parallel. Therefore, 300ms is to be an upper limit, irrespective of the power–consumption value.
❺ The on–time shall be at least equal to $T_{0.95}$.
❻ Where the break current value differs from the make current value, the on–time refers to the make current value after which the current is reduced to the break current value for a suitable period. e.g. 0.05s.

Contact Rating Table from EN 947–5–1

Examples of Contact Rating Designation Based on Utilization Categories

Designation❶	Utilization Category	Conventional Thermal Current I_{the}(A)	Rated Operational Current I_e (A) at Rated Operational Voltages U_e						VA Rating	
AC			120 V	240 V	380 V	480 V	500 V	600 V	Make	Break
A150	AC–15	10	6	–	–	–	–	–	7200	720
A300	AC–15	10	6	3	–	–	–	–	7200	720
A600	AC–15	10	6	3	1.9	1.5	1.4	1.2	7200	720
B150	AC–15	5	3	–	–	–	–	–	3600	360
B300	AC–15	5	3	1.5	–	–	–	–	3600	360
B600	AC–15	5	3	1.5	0.95	0.75	0.72	0.6	3600	360
C150	AC–15	2.5	1.5	–	–	–	–	–	1800	180
C300	AC–15	2.5	1.5	0.75	–	–	–	–	1800	180
C600	AC–15	2.5	1.5	0.75	0.47	0.375	0.35	0.3	1800	180
D150	AC–14	1.0	0.6	–	–	–	–	–	432	72
D300	AC–14	1.0	0.6	0.3	–	–	–	–	432	72
E150	AC–14	0.5	0.3	–	–	–	–	–	216	36
DC			125 V	250 V	440 V	500 V	600 V		Make	Break
N150	DC–13	10	2.2	–	–	–	–		275	275
N300	DC–13	10	2.2	1.1	–	–	–		275	275
N600	DC–13	10	2.2	1.1	0.63	0.55	0.4		275	275
P150	DC–13	5	1.1	–	–	–	–		138	138
P300	DC–13	5	1.1	0.55	–	–	–		138	138
P600	DC–13	5	1.1	0.55	0.31	0.27	0.2		138	138
Q150	DC–13	2.5	0.55	–	–	–	–		69	69
Q300	DC–13	2.5	0.55	0.27	–	–	–		69	69
Q600	DC–13	2.5	0.55	0.27	0.15	0.13	0.1		69	69
R150	DC–13	1.0	0.22	–	–	–	–		28	28
R300	DC–13	1.0	0.22	0.1	–	–	–		28	28

❶ This letter stands for the conventional thermal current and indentifies AC or DC; e.g. B is 5A AC The following numbers are the rated insulated voltage.

Rockwell Automation

Allen-Bradley

Allen-Bradley, a Rockwell Automation Business, has been helping its customers in productivity and quality for more than 90 years. We design, manufacture and support a range of automation products worldwide. They include logic processors, power and motion devices, operator interfaces, sensors and a variety of software. Rockwell is one of the leading technology companies.

Worldwide representation.

Argentina • Australia • Austria • Bahrain • Belgium • Brazil • Bulgaria • Canada • Chile • China, PRC • Colombia • Costa Rica • Croatia • Cyprus • Czech Republic • De
Ecuador • Egypt • El Salvador • Finland • France • Germany • Greece • Guatemala • Honduras • Hong Kong • Hungary • Iceland • India • Indonesia • Ireland • Israel
Jamaica • Japan • Jordan • Korea • Kuwait • Lebanon • Malaysia • Mexico • Netherlands • New Zealand • Norway • Pakistan • Peru • Philippines • Poland • Pr
Puerto Rico • Qatar • Romania • Russia-CIS • Saudi Arabia • Singapore • Slovakia • Slovenia • South Africa, Republic • Spain • Sweden • Switzerland • Taiwan • Th
Turkey • United Arab Emirates • United Kingdom • United States • Uruguay • Venezuela • Yugoslavia

Allen-Bradley Headquarters, 1201 South Second Street, Milwaukee, WI 53204 USA, Tel: (1) 414 3822000 Fax: (1) 414 382-4444

Publication 700-2.14 June 1998
Supersedes Publication 700-2.14 Dated July