Technical Data

Original Instructions

IEC Open Style Starter Specifications

Bulletin 190E/191E

Topic	Page
Product Line Overview	2
IEC Starters	2
Bulletin 190E/191E Eco Starters	3
Product Comparison	5
Product Selection	6
Catalog Number Explanation	6
Selection Using UL 60947-4-1 Ratings	7
Selection Using IEC 60947-4-1	15
Coil Voltage Codes	18
Short-circuit Current Ratings	19
UL 60947-4-1 SCCR Ratings	19
IEC 60947-4-1 SCCR Ratings	27
Assembly Diagrams	30
Starters with Bulletin 100-K Miniature IEC Contactors	30
Starters with Bulletin 100-C IEC Contactors	32
Starters with Bulletin 100-E IEC Contactors	36
Approximate Dimensions	38
Starters with Bulletin 100-K Miniature IEC Contactors	38
Starters with Bulletin 100-C IEC Contactors	39
Starters with Bulletin 100-E IEC Contactors	41
Additional Resources	43

IEC Starters

The Allen-Bradley® IEC starter portfolio provides a wide variety of options to match light-duty, industrial type application needs. The compact design of our IEC starters addresses your most space-critical applications while allowing for easy, secure wiring.

Our open starters provide mounting flexibility using busbars, DIN Rail, or panel mounting methods in the enclosure of your choice, available with or without disconnecting means.

- Product Applications
- Conveyors
- Belts
- Machine tools
- Overhead doors
- Cranes
- Hoists

Features

- Current range: 0.1...40 A
- Uses Bulletin 140MT motor protection circuit breakers (MPCBs) or Motor Circuit Protectors (MCPs) and Bulletin 100-E, 100-C, or 100-K contactors
- cULus Listed for control and protection of motor loads
- Type 1 or Type 2 Coordination
- Busbar, DIN Rail, or panel (screw) mounting

Standards Compliance and Certifications

Standards Compliance
IEC/EN 60947-1, -4-1, -5, -5-4
CSA C22.2, No 60947-1, 60947-4-1
UL 60947-1, UL 60947-4-1

Certifications
cULus Listed (File No. E205542, Guide NKJH, NKJH7)
CE Marked
UKCA Marked
Morocco Marked

Bulletin 190E/191E Eco Starters

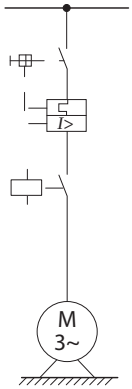

You can use Bulletin 190E/191E Eco Starters in a variety of applications. These two-component starters can be used in group motor applications or as a standalone product without any additional short-circuit protection in the motor branch circuits.

Verify that the motor protection circuit breaker can be set to the rated motor current.

Group Motor Installation and Type F Combination Motor Controllers (cULus)

Type F devices rely on manual motor starters. Because of this starter type's compact nature, Type F devices are slash voltage rated (example: 600Y/347V AC). This limits their use to solidly grounded networks at higher voltages (example: above 347V AC).

Manual motor starters that are certified as Combination Motor Controllers have to meet two specific criteria. First, they must have line-side terminal spacing of two inches over-surface (creepage) and one inch through air (clearance). The other criteria are based on differentiating between thermal (overload) and magnetic (short-circuit) trips, which simplifies troubleshooting.

Type E Self-protected Combination Motor Controllers

Most of the 140MT-C/-D motor protection circuit breakers used in the 190E/191E starters are UL Listed as a manual Type E self-protected combination motor controllers. Although there are many tests involved, one of the critical tests a self-protected combination motor controller must pass is to perform 6,000 electrical operations and an additional 4,000 mechanical operations after a short-circuit event.

Type E Self-Protected Combination Motor Controllers consist of a single component, making them the right choice when panel space is limited. They are well-suited to panels controlling simple motor systems.

Type E controllers are for applications where the motor is cycled infrequently, such as ON at that start of the shift and OFF at the end.

A combination of a manual self-protected combination motor controller and a contactor can be listed as a Type E self-protected combination motor controller. In this case, the MPCB and contactor must each pass the additional 6,000 electrical and 4,000 mechanical operational test. In some cases, this may require oversizing the MPCB or the contactor to achieve weld-free performance and meet the additional life requirements.

Type F Combination Motor Controllers

By definition, a Type F combination motor controller consists of a Type E manual self-protected combination motor controller and a magnetic or solid-state motor controller (such as a 100-C contactor or an SMC™ soft starter). As with a manual Type E self-protected combination motor controller, additional short-circuit protection is not required for the individual motor circuits.

Type F Combination Motor Controllers can reliably cycle a motor hundreds of thousands of times. Two-component Type F assemblies use a manual, self-protected device for both short-circuit and overload protection.

Group Motor Installation

Group installation has been successfully used for many years in the U.S. and Canada. It allows "two or motors or one or more motors and other loads to be connected to the same branch-circuit...". The most restrictive part of the conditions specified for Group Installation is the requirement for the protection of the conductors for each motor circuit. In the U.S. NEC for 2002, a new rule for the conductor sizing was added for devices that are listed and marked "Suitable for use as Tap Conductor Protection".

Figure 1 shows an example that illustrates installations involving multiple motors with a single BCPD protecting the entire "Group".

Figure 1 - Group Installation

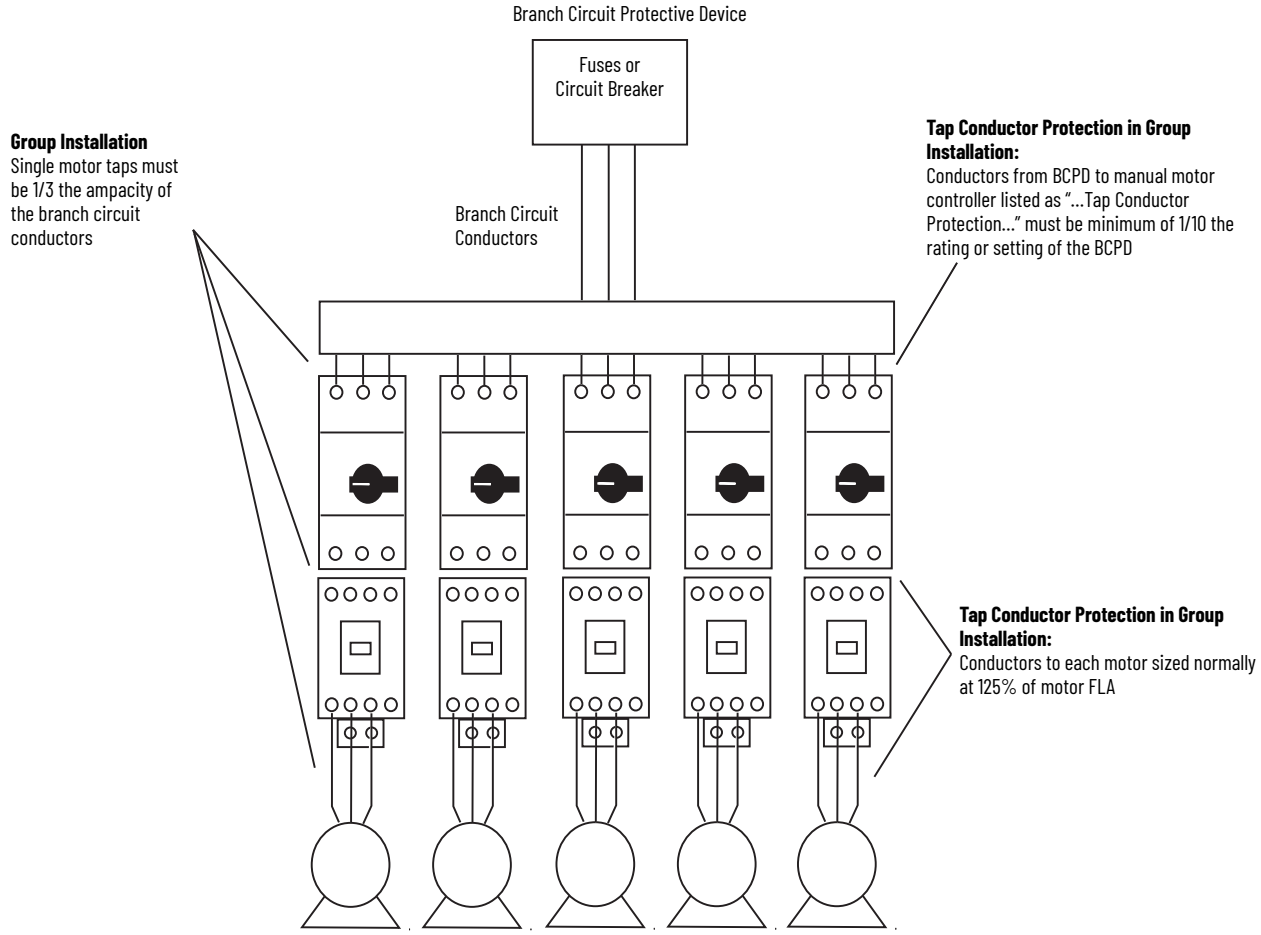

Product Comparison

Starter Type	**Eco Starter with 100/104-K Miniature IEC Contactors**	**Eco Starter with 100/104-C IEC Contactors**	**Eco Starter with 100-E IEC Contactors**
Rated Current I_e	5...12 A	9...37 A	9...38 A
No. of Poles	3	3	3
Direct-on-line (DOL) Starter	✓	✓	✓
Reversing Starter	✓	✓	–
AC Coils	Standard	Standard	Electronic: standard or low-consumption
DC Coils	Standard or integrated diode option	Electronic with integrated diode	Electronic: standard, low-consumption, or low-consumption/faster drop-out
Standards Compliance			
cULus Listed	✓	✓	✓
CE	✓	✓	✓
IEC 60947	✓	✓	✓
Components			
MPCB	140MT-C	140MT-C	140MT-C, -D
MCP	–	140MT-D	140MT-D
Contactor	100-K, 104-K (reversing)	100-C, 104-C (reversing)	100-E

Catalog Number Explanation

Examples that are given in this section are not intended to be used for product selection. Use ProposalWorks™ software to configure the Bulletin 190E/191E Eco starter. ProposalWorks software is available from rok.auto/systemtools.

190	E	-		C09	D	10	-	C	A16	X	-		-	TE
a	b		c	d	e	f		g	h	i		j		k

a	
Bulletin No.	
Code	**Description**
190	Non-reversing Starter
191	Reversing Starter

b	
Mounting Style	
Code	**Description**
E	Eco

c	
Busbar Adapter Style	
Code	**Description**
Blank	No Adapter

d	
Contactor Type/Rating	
Code	**Description**
K05	100-K/104K, 5 A
K09	100-K/104K, 9 A
K12	100-K/104K, 12 A
C09	100-C/104-C, 9 A
C12	100-C/104-C, 12 A
C16	100-C/104-C, 16 A
C23	100-C/104-C, 23 A
C30	100-C/104-C, 30 A
C37	100-C/104-C, 37 A
E09	100-E, 9 A
E12	100-E, 12 A
E16	100-E, 16 A
E26	100-E, 26 A
E32	100-E, 32 A
E38	100-E, 38 A

e	
Contactor Coil Voltage Code	
Bulletin 100-K Contactors	
Code	**Description**
D	110V AC, 50 Hz/120V AC, 60 Hz
DJ	24V DC (w/Integrated Diode)
ZJ	24V DC
KJ	24V AC, 50/60 Hz
Bulletin 100-C Contactors	
Code	**Description**
D	110V AC, 50 Hz/120V AC, 60 Hz
EJ	24V DC with Electronic Coil
KF	230V AC, 50 Hz
G	400...415V AC, 50 Hz
KJ	24V AC, 50/60 Hz
T	240V AC, 50 Hz/277V AC, 60 Hz
L	208...240V, 60 Hz
B	440V AC, 50 Hz/480V AC, 60 Hz

Bulletin 100-E Contactors	
Code	**Description**
KJ	24...60V AC, 20...60V DC
KD	100...250V AC/DC
KN	250...500V AC/DC
EJ	Low Consumption 24...60V AC, 20...60V DC
QJ	Low Consumption 24V DC

f	
Contactor Auxiliary Contacts	
Code	**Description**
01	1 N.C.
10	1 N.O.
11	1 N.O. + 1 N.C.
12	1 N.O. + 2 N.C.

g	
Breaker Frame	
Code	**Description**
C	140MT C-Frame, MPCB only
D	140MT D-Frame, MPCB or MCP

h	
Breaker Current	
Code	**Description**
A16	0.1...0.16 A
A25	0.16...0.25 A
A40	0.25...0.40 A
A63	0.40...0.63 A
B10	0.63...1.0 A
B16	1.0...1.6 A
B25	1.6...2.5 A
B40	2.5...4.0 A
B63	4.0...6.3 A
C10	6.3...10.0 A
C20	14.5...20 A
C25	18...25 A
C29	23...29 A
C32	26.5...32 A
C36	30...36 A
C40	34...40A

i	
Breaker Auxiliary Contacts	
Code	**Description**
X	Without auxiliary and trip contacts
B	1 N.O.
C	1 N.O. + 1 N.C.
D	2 N.O.
E	2 N.C.
R	1 N.C. + 1 N.O. (SC + OL)
S	1 N.O. + 1 N.O. (SC + OL)
T	1 N.O. + 1 N.C. (SC + OL)
N	1 N.O. (SC + OL) + 1 N.C. (SC)

j	
Overload Relay Code	
Code	**Description**
Blank	No separate overload relay code

k	
Options	
Code	**Description**
KN	Black Lockable Knob
KY	Red/Yellow Lockable Knob
KB	Blue Lockable Knob
TE	Spacing Adapter for Type E

Selection Using UL 60947-4-1 Ratings

Starters with Bulletin 100-K/104-K Contactors and Bulletin 140MT MPCBs/MCPs

Table 1 - Suitable for Group Installation on load side of 140MT Manual Motor Controller; Type 1 Short-circuit Coordination Only

Motor Current Adjustment Range [A]	Max. Hp ratings [Hp] or [(FLA/LRA)] (1)						Cat. No.	
	1-phase		3-phase				DOL Starters	Reversing Starters
	115V AC	230V AC	200V AC	230V AC	480V AC	575V AC		
C-Frame MPCB with 100-K/104-K Contactors								
0.10...0.16	(0.16/0.96)	(0.16/0.96)	(0.16/0.96)	(0.16/0.96)	(0.16/0.96)	(0.16/0.96)	190E-K05⊗10-CA16X	191E-K05⊗01-CA16X
0.16...0.25	(0.25/1.5)	(0.25/1.5)	(0.25/1.5)	(0.25/1.5)	(0.25/1.5)	(0.25/1.5)	190E-K05⊗10-CA25X	191E-K05⊗01-CA25X
0.25...0.40	(0.40/2.4)	(0.40/2.4)	(0.40/2.4)	(0.40/2.4)	(0.40/2.4)	(0.40/2.4)	190E-K05⊗10-CA40X	191E-K05⊗01-CA40X
0.40...0.63	(0.63/3.78)	(0.63/3.78)	(0.63/3.78)	(0.63/3.78)	(0.63/3.78)	(0.63/3.78)	190E-K05⊗10-CA63X	191E-K05⊗01-CA63X
0.63...1.0	(1.0/6.0)	(1.0/6.0)	(1.0/6.0)	(1.0/6.0)	1/2	1/2	190E-K05⊗10-CB10X	191E-K05⊗01-CB10X
1.0...1.6	(1.6/9.6)	1/10	(1.6/9.6)	(1.6/9.6)	3/4	3/4	190E-K05⊗10-CB16X	191E-K05⊗01-CB16X
1.6...2.5	(2.5/15)	1/6	1/2	1/2	1	1 1/2	190E-K05⊗10-CB25X	191E-K05⊗01-CB25X
2.5...4.0	1/8	1/3	3/4	3/4	2	3	190E-K05⊗10-CB40X	191E-K05⊗01-CB40X
4.0...6.3	1/4	1/2	1	1 1/2	3	3	190E-K05⊗10-CB63X	191E-K05⊗01-CB63X
4.0...6.3	1/4	1/2	1	1 1/2	3	5	190E-K09⊗10-CB63X	191E-K09⊗01-CB63X
6.3...10	1/2	1 1/2	2	2	5	5	190E-K09⊗10-CC10X	191E-K09⊗01-CC10X
6.3...10	1/2	1 1/2	2	2	5	7 1/2	190E-K12⊗10-CC10X	191E-K12⊗01-CC10X
10...16	3/4	2	3	3	7 1/2	7 1/2	190E-K12⊗10-CC16X	191E-K12⊗01-CC16X

(1) Hp ratings shown in the table are for reference. Final selection of the starter depends upon the actual motor full-load current and service factor.

⊗ Coil voltage code – see page 18.

Table 2 - Suitable for Group Installation/Disconnecting Means on load side of 140MT Manual Motor Controller; Type 1 Short-circuit Coordination Only

Motor Current Adjustment Range [A]	Max. Hp ratings [Hp] or [(FLA/LRA)] (1)						Cat. No.	
	1-phase		3-phase				DOL Starters	Reversing Starters
	115V AC	230V AC	200V AC	230V AC	480V AC	575V AC		
C-Frame MPCB with 100-K/104-K Contactors								
0.10...0.16	(0.16/0.96)	(0.16/0.96)	(0.16/0.96)	(0.16/0.96)	(0.16/0.96)	(0.16/0.96)	190E-K05⊗10-CA16X	191E-K05⊗01-CA16X
0.16...0.25	(0.25/1.5)	(0.25/1.5)	(0.25/1.5)	(0.25/1.5)	(0.25/1.5)	(0.25/1.5)	190E-K05⊗10-CA25X	191E-K05⊗01-CA25X
0.25...0.40	(0.40/2.4)	(0.40/2.4)	(0.40/2.4)	(0.40/2.4)	(0.40/2.4)	(0.40/2.4)	190E-K05⊗10-CA40X	191E-K05⊗01-CA40X
0.40...0.63	(0.63/3.78)	(0.63/3.78)	(0.63/3.78)	(0.63/3.78)	(0.63/3.78)	(0.63/3.78)	190E-K05⊗10-CA63X	191E-K05⊗01-CA63X
0.63...1.0	(1.0/6.0)	(1.0/6.0)	(1.0/6.0)	(1.0/6.0)	1/2	1/2	190E-K05⊗10-CB10X	191E-K05⊗01-CB10X
1.0...1.6	(1.6/9.6)	1/10	(1.6/9.6)	(1.6/9.6)	3/4	3/4	190E-K05⊗10-CB16X	191E-K05⊗01-CB16X
1.6...2.5	(2.5/15)	1/6	1/2	1/2	1	1 1/2	190E-K05⊗10-CB25X	191E-K05⊗01-CB25X
2.5...4.0	1/8	1/3	3/4	3/4	2	3	190E-K05⊗10-CB40X	191E-K05⊗01-CB40X
4.0...6.3	1/4	1/2	1	1 1/2	3	3	190E-K05⊗10-CB63X	191E-K05⊗01-CB63X
4.0...6.3	1/4	1/2	1	1 1/2	3	5	190E-K09⊗10-CB63X	191E-K09⊗01-CB63X
6.3...10	1/2	1 1/2	2	2	5	5	190E-K09⊗10-CC10X	191E-K09⊗01-CC10X
6.3...10	1/2	1 1/2	2	2	5	7 1/2	190E-K12⊗10-CC10X	191E-K12⊗01-CC10X
10...16	3/4	2	3	3	7 1/2	7 1/2	190E-K12⊗10-CC16X	191E-K12⊗01-CC16X

(1) Hp ratings shown in the table are for reference. Final selection of the starter depends upon the actual motor full-load current and service factor.

⊗ Coil voltage code – see page 18.

Table 3 - 140MT Combination Motor Controller as Type F Combination with 100-K Contactors; Type 1 Short-circuit Coordination Only

Motor Current Adjustment Range [A]	Max. Hp ratings [Hp] or [(FLA/LRA)] (1)						Cat. No.	
	1-phase		3-phase				DOL Starters	Reversing Starters
	115V AC	230V AC	200V AC	230V AC	480V AC	575V AC		
C-Frame MCP with 100-K/104-K Contactors								
0.10...0.16	(0.16/0.96)	(0.16/0.96)	(0.16/0.96)	(0.16/0.96)	(0.16/0.96)	(0.16/0.96)	190E-K05⊗10-CA16X-TE	191E-K05⊗01-CA16X-TE
0.16...0.25	(0.25/1.5)	(0.25/1.5)	(0.25/1.5)	(0.25/1.5)	(0.25/1.5)	(0.25/1.5)	190E-K05⊗10-CA25X-TE	191E-K05⊗01-CA25X-TE
0.25...0.40	(0.40/2.4)	(0.40/2.4)	(0.40/2.4)	(0.40/2.4)	(0.40/2.4)	(0.40/2.4)	190E-K05⊗10-CA40X-TE	191E-K05⊗01-CA40X-TE
0.40...0.63	(0.63/3.78)	(0.63/3.78)	(0.63/3.78)	(0.63/3.78)	(0.63/3.78)	(0.63/3.78)	190E-K05⊗10-CA63X-TE	191E-K05⊗01-CA63X-TE
0.63...1.0	(1.0/6.0)	(1.0/6.0)	(1.0/6.0)	(1.0/6.0)	1/2	1/2	190E-K05⊗10-CB10X-TE	191E-K05⊗01-CB10X-TE
1.0...1.6	(1.6/9.6)	1/10	(1.6/9.6)	(1.6/9.6)	3/4	3/4	190E-K05⊗10-CB16X-TE	191E-K05⊗01-CB16X-TE
1.6...2.5	(2.5/15)	1/6	1/2	1/2	1	1 1/2	190E-K05⊗10-CB25X-TE	191E-K05⊗01-CB25X-TE
2.5...4.0	1/8	1/3	3/4	3/4	2	3	190E-K05⊗10-CB40X-TE	191E-K05⊗01-CB40X-TE
4.0...6.3	1/4	1/2	1	1 1/2	3	—	190E-K05⊗10-CB63X-TE	191E-K05⊗01-CB63X-TE
4.0...6.3	1/4	1/2	1	1 1/2	3	—	190E-K09⊗10-CB63X-TE	191E-K09⊗01-CB63X-TE
6.3...10	1/2	1 1/2	2	2	5	—	190E-K09⊗10-CC10X-TE	191E-K09⊗01-CC10X-TE
6.3...10	1/2	1 1/2	2	2	5	—	190E-K12⊗10-CC10X-TE	191E-K12⊗01-CC10X-TE
10...16	3/4	2	3	3	7 1/2	—	190E-K12⊗10-CC16X-TE	191E-K12⊗01-CC16X-TE

(1) Hp ratings shown in the table are for reference. Final selection of the starter depends upon the actual motor full-load current and service factor.

⊗ Coil voltage code — see page 18.

Starters with Bulletin 100-C/104-C Contactors and Bulletin 140MT MPCBs/MCPs

Table 4 - Suitable for Group Installation on load side of 140MT Manual Motor Controller; Type 1 Short-circuit Coordination Only

Motor Current Adjustment Range [A]	Max. Hp ratings [Hp] or [(FLA/LRA)] (1)						Cat. No.	
	1-phase		3-phase				DOL Starters	Reversing Starters
	115V AC	230V AC	200V AC	230V AC	480V AC	575V AC		
C-Frame MPCB with 100-C/104-C Contactors								
0.10...0.16	(0.16/0.96)	(0.16/0.96)	(0.16/0.96)	(0.16/0.96)	(0.16/0.96)	(0.16/0.96)	190E-C09⊗10-CA16X	191E-C09⊗11-CA16X
0.16...0.25	(0.25/1.5)	(0.25/1.5)	(0.25/1.5)	(0.25/1.5)	(0.25/1.5)	(0.25/1.5)	190E-C09⊗10-CA25X	191E-C09⊗11-CA25X
0.25...0.40	(0.40/2.4)	(0.40/2.4)	(0.40/2.4)	(0.40/2.4)	(0.40/2.4)	(0.40/2.4)	190E-C09⊗10-CA40X	191E-C09⊗11-CA40X
0.40...0.63	(0.63/3.78)	(0.63/3.78)	(0.63/3.78)	(0.63/3.78)	(0.63/3.78)	(0.63/3.78)	190E-C09⊗10-CA63X	191E-C09⊗11-CA63X
0.63...1.0	(1.0/6.0)	(1.0/6.0)	(1.0/6.0)	(1.0/6.0)	1/2	1/2	190E-C09⊗10-CB10X	191E-C09⊗11-CB10X
1.0...1.6	(1.6/9.6)	1/10	(1.6/9.6)	(1.6/9.6)	3/4	3/4	190E-C09⊗10-CB16X	191E-C09⊗11-CB16X
1.6...2.5	(2.5/15)	1/6	1/2	1/2	1	1 1/2	190E-C09⊗10-CB25X	191E-C09⊗11-CB25X
2.5...4.0	1/8	1/3	3/4	3/4	2	3	190E-C09⊗10-CB40X	191E-C09⊗11-CB40X
4.0...6.3	1/4	1/2	1	1 1/2	3	5	190E-C09⊗10-CB63X	191E-C09⊗11-CB63X
6.3...10	1/2	1 1/2	2	2	5	7 1/2	190E-C09⊗10-CC10X	191E-C09⊗11-CC10X
10...16	1/2	2	3	3	7 1/2	10	190E-C12⊗10-CC16X	191E-C12⊗11-CC10X
10...16	1	2	3	5	10	10	190E-C16⊗10-CC16X	191E-C16⊗11-CC16X
14.5...20	1 1/2	3	5	5	10	15	190E-C16⊗10-CC20X	191E-C16⊗11-CC20X
18...25	2	3	5	7 1/2	15	15	190E-C23⊗10-CC25X	191E-C23⊗11-CC25X
18...25	2	3	5	7 1/2	15	20	190E-C30⊗10-CC25X	191E-C30⊗11-CC25X
23...29	2	5	7 1/2	10	20	25	190E-C30⊗10-CC29X	191E-C30⊗11-CC29X
26.5...32	(32/192)	5	7 1/2	10	20	30	190E-C37⊗10-CC32X	191E-C37⊗11-CC32X
D-Frame MPCB with 100-C/104-C Contactors								
0.40...0.63	(0.63/3.78)	(0.63/3.78)	(0.63/3.78)	(0.63/3.78)	(0.63/3.78)	(0.63/3.78)	190E-C09⊗10-DA63X	191E-C09⊗11-DA63X
0.63...1.0	(1.0/6.0)	(1.0/6.0)	(1.0/6.0)	(1.0/6.0)	1/2	1/2	190E-C09⊗10-DB10X	191E-C09⊗11-DB10X
1.0...1.6	(1.6/9.6)	1/10	(1.6/9.6)	(1.6/9.6)	3/4	3/4	190E-C09⊗10-DB16X	191E-C09⊗11-DB16X
1.6...2.5	(2.5/15)	1/6	1/2	1/2	1	1 1/2	190E-C09⊗10-DB25X	191E-C09⊗11-DB25X
2.5...4.0	1/8	1/3	3/4	3/4	2	3	190E-C09⊗10-DB40X	191E-C09⊗11-DB40X
4.0...6.3	1/4	1/2	1	1 1/2	3	5	190E-C09⊗10-DB63X	191E-C09⊗11-DB63X
6.3...10	1/2	1 1/2	2	2	5	7 1/2	190E-C09⊗10-DC10X	191E-C09⊗11-DC10X
10...16	1/2	2	3	3	7 1/2	10	190E-C12⊗10-DC16X	191E-C12⊗11-DC10X
10...16	1	2	3	5	10	10	190E-C16⊗10-DC16X	191E-C16⊗11-DC16X
14.5...20	1 1/2	3	5	5	10	15	190E-C23⊗10-DC20X	191E-C23⊗11-DC20X
18...25	2	3	5	7 1/2	15	15	190E-C23⊗10-DC25X	191E-C23⊗11-DC25X
18...25	2	3	5	7 1/2	15	20	190E-C30⊗10-DC25X	191E-C30⊗11-DC25X
23...29	2	5	7 1/2	10	20	25	190E-C30⊗10-DC29X	191E-C30⊗11-DC29X
26.5...32	(32/192)	5	7 1/2	10	20	30	190E-C37⊗10-DC32X	191E-C37⊗11-DC32X
30...36	3	5	10	10	25	30	190E-C37⊗10-DC36X	191E-C37⊗11-DC36X
34...40	3	5	10	10	25	30	190E-C37⊗10-DC40X	191E-C37⊗11-DC40X

(1) Hp ratings shown in the table are for reference. Final selection of the starter depends upon the actual motor full-load current and service factor.

⊗ Coil voltage code — see page 18.

Table 5 - Suitable for Group Installation/Disconnecting Means on load side of 140MT Manual Motor Controller; Type 1 Short-circuit Coordination Only

Motor Current Adjustment Range [A]	Max. Hp ratings [Hp] or [(FLA/LRA)] (1)						Cat. No.	
	1-phase		3-phase				DOL Starters	Reversing Starters
	115V AC	230V AC	200V AC	230V AC	480V AC	575V AC		
C-Frame MPCB with 100-C/104-C Contactors								
0.10...0.16	(0.16/0.96)	(0.16/0.96)	(0.16/0.96)	(0.16/0.96)	(0.16/0.96)	(0.16/0.96)	190E-C09⊗10-CA16X	191E-C09⊗11-CA16X
0.16...0.25	(0.25/1.5)	(0.25/1.5)	(0.25/1.5)	(0.25/1.5)	(0.25/1.5)	(0.25/1.5)	190E-C09⊗10-CA25X	191E-C09⊗11-CA25X
0.25...0.40	(0.40/2.4)	(0.40/2.4)	(0.40/2.4)	(0.40/2.4)	(0.40/2.4)	(0.40/2.4)	190E-C09⊗10-CA40X	191E-C09⊗11-CA40X
0.40...0.63	(0.63/3.78)	(0.63/3.78)	(0.63/3.78)	(0.63/3.78)	(0.63/3.78)	(0.63/3.78)	190E-C09⊗10-CA63X	191E-C09⊗11-CA63X
0.63...1.0	(1.0/6.0)	(1.0/6.0)	(1.0/6.0)	(1.0/6.0)	1/2	1/2	190E-C09⊗10-CB10X	191E-C09⊗11-CB10X
1.0...1.6	(1.6/9.6)	1/10	(1.6/9.6)	(1.6/9.6)	3/4	3/4	190E-C09⊗10-CB16X	191E-C09⊗11-CB16X
1.6...2.5	(2.5/15)	1/6	1/2	1/2	1	1 1/2	190E-C09⊗10-CB25X	191E-C09⊗11-CB25X
2.5...4.0	1/8	1/3	3/4	3/4	2	3	190E-C09⊗10-CB40X	191E-C09⊗11-CB40X
4.0...6.3	1/4	1/2	1	1 1/2	3	5	190E-C09⊗10-CB63X	191E-C09⊗11-CB63X
6.3...10	1/2	1 1/2	2	2	5	7 1/2	190E-C09⊗10-CC10X	191E-C09⊗11-CC10X
10...16	1/2	2	3	3	7 1/2	10	190E-C12⊗10-CC16X	191E-C12⊗11-CC10X
10...16	1	2	3	5	10	10	190E-C16⊗10-CC16X	191E-C16⊗11-CC16X
14.5...20	1 1/2	3	5	5	10	15	190E-C16⊗10-CC20X	191E-C16⊗11-CC20X
18...25	2	3	5	7 1/2	15	15	190E-C23⊗10-CC25X	191E-C23⊗11-CC25X
18...25	2	3	5	7 1/2	15	20	190E-C30⊗10-CC25X	191E-C30⊗11-CC25X
23...29	2	5	7 1/2	10	20	—	190E-C30⊗10-CC29X	191E-C30⊗11-CC29X
26.5...32	(32/192)	5	7 1/2	10	20	—	190E-C37⊗10-CC32X	191E-C37⊗11-CC32X
D-Frame MPCB with 100-C/104-C Contactors								
0.40...0.63	(0.63/3.78)	(0.63/3.78)	(0.63/3.78)	(0.63/3.78)	(0.63/3.78)	(0.63/3.78)	190E-C09⊗10-DA63X	191E-C09⊗11-DA63X
0.63...1.0	(1.0/6.0)	(1.0/6.0)	(1.0/6.0)	(1.0/6.0)	1/2	1/2	190E-C09⊗10-DB10X	191E-C09⊗11-DB10X
1.0...1.6	(1.6/9.6)	1/10	(1.6/9.6)	(1.6/9.6)	3/4	3/4	190E-C09⊗10-DB16X	191E-C09⊗11-DB16X
1.6...2.5	(2.5/15)	1/6	1/2	1/2	1	1 1/2	190E-C09⊗10-DB25X	191E-C09⊗11-DB25X
2.5...4.0	1/8	1/3	3/4	3/4	2	3	190E-C09⊗10-DB40X	191E-C09⊗11-DB40X
4.0...6.3	1/4	1/2	1	1 1/2	3	5	190E-C09⊗10-DB63X	191E-C09⊗11-DB63X
6.3...10	1/2	1 1/2	2	2	5	7 1/2	190E-C09⊗10-DC10X	191E-C09⊗11-DC10X
10...16	1/2	2	3	3	7 1/2	10	190E-C12⊗10-DC16X	191E-C12⊗11-DC10X
10...16	1	2	3	5	10	10	190E-C16⊗10-DC16X	191E-C16⊗11-DC16X
14.5...20	1 1/2	3	5	5	10	15	190E-C23⊗10-DC20X	191E-C23⊗11-DC20X
18...25	2	3	5	7 1/2	15	15	190E-C23⊗10-DC25X	191E-C23⊗11-DC25X
18...25	2	3	5	7 1/2	15	20	190E-C30⊗10-DC25X	191E-C30⊗11-DC25X
23...29	2	5	7 1/2	10	20	25	190E-C30⊗10-DC29X	191E-C30⊗11-DC29X
26.5...32	(32/192)	5	7 1/2	10	20	30	190E-C37⊗10-DC32X	191E-C37⊗11-DC32X
30...36	3	5	10	10	25	30	190E-C37⊗10-DC36X	191E-C37⊗11-DC36X
34...40	3	5	10	10	25	30	190E-C37⊗10-DC40X	191E-C37⊗11-DC40X

(1) Hp ratings shown in the table are for reference. Final selection of the starter depends upon the actual motor full-load current and service factor.

⊗ Coil voltage code — see page 18.

Table 6 - 140MT Combination Motor Controller as Type F Combination with 100-C contactors; Type 1 Short-circuit Coordination Only

Motor Current Adjustment Range [A]	Max. Hp ratings [Hp] or [(FLA/LRA)] (1)						Cat. No.	
	1-phase		3-phase				DOL Starters	Reversing Starters
	115V AC	230V AC	200V AC	230V AC	480V AC	575V AC		
C-Frame MCP with 100-C/104-C Contactors								
0.10...0.16	(0.16/0.96	0.16/0.96	0.16/0.97	0.16/0.98	(0.16/0.96)	(0.16/0.96)	190E-C09⊗10-CA16X-TE	191E-C09⊗11-CA16X-TE
0.16...0.25	(0.25/1.5)	(0.25/1.5)	(0.25/1.5)	(0.25/1.5)	(0.25/1.5)	(0.25/1.5)	190E-C09⊗10-CA25X-TE	191E-C09⊗11-CA25X-TE
0.25...0.40	(0.40/2.4)	(0.40/2.4)	(0.40/2.4)	(0.40/2.4)	(0.40/2.4)	(0.40/2.4)	190E-C09⊗10-CA40X-TE	191E-C09⊗11-CA40X-TE
0.40...0.63	(0.63/3.78)	(0.63/3.78)	(0.63/3.78)	(0.63/3.78)	(0.63/3.78)	(0.63/3.78)	190E-C09⊗10-CA63X-TE	191E-C09⊗11-CA63X-TE
0.63...1.0	(1.0/6.0)	(1.0/6.0)	(1.0/6.0)	(1.0/6.0)	1/2	1/2	190E-C09⊗10-CB10X-TE	191E-C09⊗11-CB10X-TE
1.0...1.6	(1.6/9.6)	1/10	(1.6/9.6)	(1.6/9.6)	3/4	3/4	190E-C09⊗10-CB16X-TE	191E-C09⊗11-CB16X-TE
1.6...2.5	(2.5/15)	1/6	1/2	1/2	1	1 1/2	190E-C09⊗10-CB25X-TE	191E-C09⊗11-CB25X-TE
2.5...4.0	1/8	1/3	3/4	3/4	2	3	190E-C09⊗10-CB40X-TE	191E-C09⊗11-CB40X-TE
4.0...6.3	1/4	1/2	1	1 1/2	3	—	190E-C09⊗10-CB63X-TE	191E-C09⊗11-CB63X-TE
6.3...10	1/2	1 1/2	2	2	5	—	190E-C09⊗10-CC10X-TE	191E-C09⊗11-CC10X-TE
10...16	1/2	2	3	3	7 1/2	—	190E-C12⊗10-CC16X-TE	191E-C12⊗11-CC10X-TE
10...16	1	2	3	5	10	—	190E-C16⊗10-CC16X-TE	191E-C16⊗11-CC16X-TE
D-Frame MCP with 100-C/104-C Contactors								
0.40...0.63	(0.63/3.78)	(0.63/3.78)	(0.63/3.78)	(0.63/3.78)	(0.63/3.78)	(0.63/3.78)	190E-C09⊗10-DA63X-TE	191E-C09⊗11-DA63X-TE
0.63...1.0	(1.0/6.0)	(1.0/6.0)	(1.0/6.0)	(1.0/6.0)	1/2	1/2	190E-C09⊗10-DB10X-TE	191E-C09⊗11-DB10X-TE
1.0...1.6	(1.6/9.6)	1/10	(1.6/9.6)	(1.6/9.6)	3/4	3/4	190E-C09⊗10-DB16X-TE	191E-C09⊗11-DB16X-TE
1.6...2.5	(2.5/15)	1/6	1/2	1/2	1	1 1/2	190E-C09⊗10-DB25X-TE	191E-C09⊗11-DB25X-TE
2.5...4.0	1/8	1/3	3/4	3/4	2	3	190E-C09⊗10-DB40X-TE	191E-C09⊗11-DB40X-TE
4.0...6.3	1/4	1/2	1	1 1/2	3	5	190E-C09⊗10-DB63X-TE	191E-C09⊗11-DB63X-TE
6.3...10	1/2	1 1/2	2	2	5	7 1/2	190E-C09⊗10-DC10X-TE	191E-C09⊗11-DC10X-TE
10...16	1/2	2	3	3	7 1/2	10	190E-C12⊗10-DC16X-TE	191E-C12⊗11-DC10X-TE
10...16	1	2	3	5	10	10	190E-C16⊗10-DC16X-TE	191E-C16⊗11-DC16X-TE
14.5...20	1 1/2	3	5	5	10	—	190E-C23⊗10-DC20X-TE	191E-C23⊗11-DC20X-TE
18...25	2	3	5	7 1/2	15	—	190E-C23⊗10-DC25X-TE	191E-C23⊗11-DC25X-TE
23...29	2	5	7 1/2	10	20	—	190E-C30⊗10-DC25X-TE	191E-C30⊗11-DC25X-TE
26.5...32	(32/192)	5	7 1/2	10	20	—	190E-C37⊗10-DC32X-TE	191E-C37⊗11-DC32X-TE
30...36	3	5	10	10	25	—	190E-C37⊗10-DC36X-TE	191E-C37⊗11-DC36X-TE
34...40	3	5	10	10	25	—	190E-C37⊗10-DC40X-TE	191E-C37⊗11-DC40X-TE

(1) Hp ratings shown in the table are for reference. Final selection of the starter depends upon the actual motor full-load current and service factor.

⊗ Coil voltage code — see page 18.

Starters with Bulletin 100-E Contactors and Bulletin 140MT MPCBs/MCPs

Table 7 - Suitable for Group Installation on load side of 140MT Manual Motor Controller; Type 1 Short-circuit Coordination Only

Motor Current Adjustment Range [A]	Max. Hp ratings [Hp] or [(FLA/LRA)] (1)						Cat. No.
	1-phase		3-phase				DOL Starters
	115V AC	230V AC	200V AC	230V AC	480V AC	575V AC	
C-Frame MPCB with 100-E Contactors							
0.10...0.16	(0.16/0.96)	(0.16/0.96)	(0.16/0.96)	(0.16/0.96)	(0.16/0.96)	(0.16/0.96)	190E-E09⊗10-CA16X
0.16...0.25	(0.25/1.5)	(0.25/1.5)	(0.25/1.5)	(0.25/1.5)	(0.25/1.5)	(0.25/1.5)	190E-E09⊗10-CA25X
0.25...0.40	(0.40/2.4)	(0.40/2.4)	(0.40/2.4)	(0.40/2.4)	(0.40/2.4)	(0.40/2.4)	190E-E09⊗10-CA40X
0.40...0.63	(0.63/3.78)	(0.63/3.78)	(0.63/3.78)	(0.63/3.78)	(0.63/3.78)	(0.63/3.78)	190E-E09⊗10-CA63X
0.63...1.0	(1.0/6.0)	(1.0/6.0)	(1.0/6.0)	(1.0/6.0)	1/2	1/2	190E-E09⊗10-CB10X
1.0...1.6	(1.6/9.6)	1/10	(1.6/9.6)	(1.6/9.6)	3/4	3/4	190E-E09⊗10-CB16X
1.6...2.5	(2.5/15)	1/6	1/2	1/2	1	1 1/2	190E-E09⊗10-CB25X
2.5...4.0	1/8	1/3	3/4	3/4	2	3	190E-E09⊗10-CB40X
4.0...6.3	1/4	1/2	1	1 1/2	3	5	190E-E09⊗10-CB63X
6.3...10	1/2	1 1/2	2	2	5	7 1/2	190E-E09⊗10-CC10X
10...16	1	2	3	3	7 1/2	10	190E-E12⊗10-CC16X
10...16	1	2	3	5	10	10	190E-E16⊗10-CC16X
14.5...20	1 1/2	3	5	5	10	15	190E-E16⊗10-CC20X
18...25	2	3	5	7 1/2	15	20	190E-E26⊗10-CC25X
23...29	2	5	7 1/2	10	20	25	190E-E30⊗10-CC29X
26.5...32	2	5	7 1/2	10	20	30	190E-E38⊗10-CC32X
D-Frame MPCB with 100-E Contactors							
0.40...0.63	(0.63/3.78)	(0.63/3.78)	(0.63/3.78)	(0.63/3.78)	(0.63/3.78)	(0.63/3.78)	190E-E09⊗10-DA63X
0.63...1.0	(1.0/6.0)	(1.0/6.0)	(1.0/6.0)	(1.0/6.0)	1/2	1/2	190E-E09⊗10-DB10X
1.0...1.6	(1.6/9.6)	1/10	(1.6/9.6)	(1.6/9.6)	3/4	3/4	190E-E09⊗10-DB16X
1.6...2.5	(2.5/15)	1/6	1/2	1/2	1	1 1/2	190E-E09⊗10-DB25X
2.5...4.0	1/8	1/3	3/4	3/4	2	3	190E-E09⊗10-DB40X
4.0...6.3	1/4	1/2	1	1 1/2	3	5	190E-E09⊗10-DB63X
6.3...10	1/2	1 1/2	2	2	5	7 1/2	190E-E09⊗10-DC10X
10...16	1	2	3	3	7 1/2	10	190E-E12⊗10-DC16X
10...16	1	2	3	5	10	10	190E-E16⊗10-DC16X
14.5...20	1 1/2	3	5	5	10	15	190E-E26⊗10-DC20X
18...25	2	3	5	7 1/2	15	20	190E-E26⊗10-DC25X
23...29	2	5	7 1/2	10	20	25	190E-E30⊗10-DC29X
26.5...32	2	5	7 1/2	10	20	30	190E-E38⊗10-DC32X
30...36	2	5	10	10	25	30	190E-E38⊗10-DC36X
34...40	2	5	10	10	25	30	190E-E38⊗10-DC40X

(1) Hp ratings shown in the table are for reference. Final selection of the starter depends upon the actual motor full-load current and service factor.

⊗ Coil voltage code — see page 18.

Table 8 - Suitable for Group Installation/Disconnecting Means on load side of 140MT Manual Motor Controller; Type 1 Short-circuit Coordination Only

Motor Current Adjustment Range [A]	Max. Hp ratings [Hp] or [(FLA/LRA)] (1)						Cat. No.
	1-phase		3-phase				DOL Starters
	115V AC	230V AC	200V AC	230V AC	480V AC	575V AC	
C-Frame MPCB with 100-E Contactors							
0.10...0.16	(0.16/0.96)	(0.16/0.96)	(0.16/0.96)	(0.16/0.96)	(0.16/0.96)	(0.16/0.96)	190E-E09⊗10-CA16X
0.16...0.25	(0.25/1.5)	(0.25/1.5)	(0.25/1.5)	(0.25/1.5)	(0.25/1.5)	(0.25/1.5)	190E-E09⊗10-CA25X
0.25...0.40	(0.40/2.4)	(0.40/2.4)	(0.40/2.4)	(0.40/2.4)	(0.40/2.4)	(0.40/2.4)	190E-E09⊗10-CA40X
0.40...0.63	(0.63/3.78)	(0.63/3.78)	(0.63/3.78)	(0.63/3.78)	(0.63/3.78)	(0.63/3.78)	190E-E09⊗10-CA63X
0.63...1.0	(1.0/6.0)	(1.0/6.0)	(1.0/6.0)	(1.0/6.0)	1/2	1/2	190E-E09⊗10-CB10X
1.0...1.6	(1.6/9.6)	1/10	(1.6/9.6)	(1.6/9.6)	3/4	3/4	190E-E09⊗10-CB16X
1.6...2.5	(2.5/15)	1/6	1/2	1/2	1	1 1/2	190E-E09⊗10-CB25X
2.5...4.0	1/8	1/3	3/4	3/4	2	3	190E-E09⊗10-CB40X
4.0...6.3	1/4	1/2	1	1 1/2	3	5	190E-E09⊗10-CB63X
6.3...10	1/2	1 1/2	2	2	5	7 1/2	190E-E09⊗10-CC10X
10...16	1	2	3	3	7 1/2	10	190E-E12⊗10-CC16X
10...16	1	2	3	5	10	10	190E-E16⊗10-CC16X
14.5...20	1 1/2	3	5	5	10	15	190E-E16⊗10-CC20X
18...25	2	3	5	7 1/2	15	20	190E-E26⊗10-CC25X
23...29	2	5	7 1/2	10	20	—	190E-E30⊗10-CC29X
26.5...32	2	5	7 1/2	10	20	—	190E-E38⊗10-CC32X
D-Frame MPCB with 100-E Contactors							
0.40...0.63	(0.63/3.78)	(0.63/3.78)	(0.63/3.78)	(0.63/3.78)	(0.63/3.78)	(0.63/3.78)	190E-E09⊗10-DA63X
0.63...1.0	(1.0/6.0)	(1.0/6.0)	(1.0/6.0)	(1.0/6.0)	1/2	1/2	190E-E09⊗10-DB10X
1.0...1.6	(1.6/9.6)	1/10	(1.6/9.6)	(1.6/9.6)	3/4	3/4	190E-E09⊗10-DB16X
1.6...2.5	(2.5/15)	1/6	1/2	1/2	1	1 1/2	190E-E09⊗10-DB25X
2.5...4.0	1/8	1/3	3/4	3/4	2	3	190E-E09⊗10-DB40X
4.0...6.3	1/4	1/2	1	1 1/2	3	5	190E-E09⊗10-DB63X
6.3...10	1/2	1 1/2	2	2	5	7 1/2	190E-E09⊗10-DC10X
10...16	1	2	3	3	7 1/2	10	190E-E12⊗10-DC16X
10...16	1	2	3	5	10	10	190E-E16⊗10-DC16X
14.5...20	1 1/2	3	5	5	10	15	190E-E26⊗10-DC20X
18...25	2	3	5	7 1/2	15	20	190E-E26⊗10-DC25X
23...29	2	5	7 1/2	10	20	25	190E-E30⊗10-DC29X
26.5...32	2	5	7 1/2	10	20	30	190E-E38⊗10-DC32X
30...36	2	5	10	10	25	30	190E-E38⊗10-DC36X
34...40	2	5	10	10	25	30	190E-E38⊗10-DC40X

(1) Hp ratings shown in the table are for reference. Final selection of the starter depends upon the actual motor full-load current and service factor.

⊗ Coil voltage code — see page 18.

Table 9 - 140MT Combination Motor Controller as Type F Combination with 100-E contactors; Type 1 Short-circuit Coordination Only

Motor Current Adjustment Range [A]	Max. Hp ratings [Hp] or [(FLA/LRA)] (1)						Cat. No.
	1-phase		3-phase				DOL Starters
	115V AC	230V AC	200V AC	230V AC	480V AC	575V AC	
C-Frame MCP with 100-E Contactors							
0.10...0.16	(0.16/0.96)	(0.16/0.96)	(0.16/0.96)	(0.16/0.96)	(0.16/0.96)	(0.16/0.96)	190E-E09⊗10-CA16X-TE
0.16...0.25	(0.25/1.5)	(0.25/1.5)	(0.25/1.5)	(0.25/1.5)	(0.25/1.5)	(0.25/1.5)	190E-E09⊗10-CA25X-TE
0.25...0.40	(0.40/2.4)	(0.40/2.4)	(0.40/2.4)	(0.40/2.4)	(0.40/2.4)	(0.40/2.4)	190E-E09⊗10-CA40X-TE
0.40...0.63	(0.63/3.78)	(0.63/3.78)	(0.63/3.78)	(0.63/3.78)	(0.63/3.78)	(0.63/3.78)	190E-E09⊗10-CA63X-TE
0.63...1.0	(1.0/6.0)	(1.0/6.0)	(1.0/6.0)	(1.0/6.0)	1/2	1/2	190E-E09⊗10-CB10X-TE
1.0...1.6	(1.6/9.6)	1/10	(1.6/9.6)	(1.6/9.6)	3/4	3/4	190E-E09⊗10-CB16X-TE
1.6...2.5	(2.5/15)	1/6	1/2	1/2	1	1 1/2	190E-E09⊗10-CB25X-TE
2.5...4.0	1/8	1/3	3/4	3/4	2	3	190E-E09⊗10-CB40X-TE
4.0...6.3	1/4	1/2	1	1 1/2	3	–	190E-E09⊗10-CB63X-TE
6.3...10	1/2	1 1/2	2	2	5	–	190E-E09⊗10-CC10X-TE
10...16	1	2	3	3	7 1/2	–	190E-E12⊗10-CC16X-TE
10...16	1	2	3	5	10	–	190E-E16⊗10-CC16X-TE
D-Frame MCP with 100-E Contactors							
0.40...0.63	(0.63/3.78)	(0.63/3.78)	(0.63/3.78)	(0.63/3.78)	(0.63/3.78)	(0.63/3.78)	190E-E09⊗10-DA63X-TE
0.63...1.0	(1.0/6.0)	(1.0/6.0)	(1.0/6.0)	(1.0/6.0)	1/2	1/2	190E-E09⊗10-DB10X-TE
1.0...1.6	(1.6/9.6)	1/10	(1.6/9.6)	(1.6/9.6)	3/4	3/4	190E-E09⊗10-DB16X-TE
1.6...2.5	(2.5/15)	1/6	1/2	1/2	1	1 1/2	190E-E09⊗10-DB25X-TE
2.5...4.0	1/8	1/3	3/4	3/4	2	3	190E-E09⊗10-DB40X-TE
4.0...6.3	1/4	1/2	1	1 1/2	3	5	190E-E09⊗10-DB63X-TE
6.3...10	1/2	1 1/2	2	2	5	7 1/2	190E-E09⊗10-DC10X-TE
10...16	1	2	3	3	7 1/2	10	190E-E12⊗10-DC16X-TE
10...16	1	2	3	5	10	10	190E-E16⊗10-DC16X-TE
14.5...20	1 1/2	3	5	5	10	–	190E-E26⊗10-DC20X-TE
18...25	2	3	5	7 1/2	15	–	190E-E26⊗10-DC25X-TE
23...29	2	5	7 1/2	10	20	–	190E-E30⊗10-DC29X-TE
26.5...32	2	5	7 1/2	10	20	–	190E-E38⊗10-DC32X-TE
30...36	2	5	10	10	25	–	190E-E38⊗10-DC36X-TE
34...40	2	5	10	10	25	–	190E-E38⊗10-DC40X-TE

(1) Hp ratings shown in the table are for reference. Final selection of the starter depends upon the actual motor full-load current and service factor.

⊗ Coil voltage code – see page 18.

Selection Using IEC 60947-4-1

Starters with Bulletin 100-K/104-K Contactors and Bulletin 140MT MPCBs

Table 10 - Type 1 Short-Circuit Coordination

Motor Current Adjustment Range [A]	IEC kW Ratings for Standard Motors, 1500 rpm			Max Short-Circuit Current [kA]		Cat. No.	
	Max kW, 50 Hz(1)			Type 1 Coordination		Direct-on-Line Starter	Reversing Starter
	230V	415V	525V	415V	525V		
C-Frame MPCB with 100-K/104-K Miniature IEC Contactors							
0.10...0.16	–	0.02	0.06	65	50	190E-K05⊗10-CA16X	191E-K05⊗01-CA16X
0.16...0.25	–	0.04	0.09	65	50	190E-K05⊗10-CA25X	191E-K05⊗01-CA25X
0.25...0.40	0.06	0.09	0.12	65	50	190E-K05⊗10-CA40X	191E-K05⊗01-CA40X
0.40...0.63	0.09	0.18	0.18	65	50	190E-K05⊗10-CA63X	191E-K05⊗01-CA63X
0.63...1.0	0.18	0.25	0.37	65	50	190E-K05⊗10-CB10X	191E-K05⊗01-CB10X
1.0...1.6	0.25	0.55	0.75	65	50	190E-K05⊗10-CB16X	191E-K05⊗01-CB16X
1.6...2.5	0.37	0.75	1.1	65	30	190E-K05⊗10-CB25X	191E-K05⊗01-CB25X
2.5...4.0	0.75	1.5	2.2	65	30	190E-K05⊗10-CB40X	191E-K05⊗01-CB40X
4.0...6.3	1.5	2.2	2.2	65	30	190E-K05⊗10-CB63X	191E-K05⊗01-CB63X
	1.5	2.2	3	65	30	190E-K09⊗10-CB63X	191E-K09⊗01-CB63X
6.3...10	2.2	4	4	65	30	190E-K09⊗10-CC10X	191E-K09⊗01-CC10X
	2.2	4	5.5	65	30	190E-K12⊗10-CC10X	191E-K12⊗01-CC10X
10...16	3	5.5	5.5	30	30	190E-K12⊗10-CC16X	191E-K12⊗01-CC16X

(1) kW ratings shown in the table are for reference. Final selection of the starter depends upon the actual motor full-load current.

⊗ Coil voltage code – see page 18.

Starters with Bulletin 100-C/104-C Contactors and Bulletin 140MT MPCBs

Table 11 - Type 2 Short-circuit Coordination

Motor Current Adjustment Range [A]	IEC kW Ratings for Standard Motors, 1500 rpm				Max. Short-circuit Current [kA]			Cat. No.	
	Max kW, 50 Hz(1)				Type 2 Coordination			DOL Starters	Reversing Starters
	230V	415V	525V	690V	415V	525V	690V		
C-Frame MPCB with 100-C/104-C Contactors									
0.10...0.16	–	0.02	0.06	0.06	100	65	50	190E-C09⊗10-CA16X	191E-C09⊗11-CA16X
0.16...0.25	–	0.04	0.09	0.09	100	65	50	190E-C09⊗10-CA25X	191E-C09⊗11-CA25X
0.25...0.40	0.06	0.09	0.12	0.18	100	65	50	190E-C09⊗10-CA40X	191E-C09⊗11-CA40X
0.40...0.63	0.09	0.18	0.18	0.25	100	65	50	190E-C09⊗10-CA63X	191E-C09⊗11-CA63X
0.63...1.0	0.18	0.25	0.37	0.55	100	65	50	190E-C09⊗10-CB10X	191E-C09⊗11-CB10X
1.0...1.6	0.25	0.55	0.75	1.1	100	50	50	190E-C09⊗10-CB16X	191E-C09⊗11-CB16X
1.6...2.5	0.37	0.75	1.1	–	65	50	–	190E-C23⊗10-CB25X	191E-C23⊗11-CB25X
2.5...4.0	0.75	1.5	–	–	65	–	–	190E-C23⊗10-CB40X	191E-C23⊗11-CB40X
4.0...6.3	1.5	2.2	–	–	65	–	–	190E-C23⊗10-CB63X	191E-C23⊗11-CB63X
6.3...10	2.2	4	–	–	65	–	–	190E-C23⊗10-CC10X	191E-C23⊗11-CC10X
10...16	4	7.5	–	–	50	–	–	190E-C30⊗10-CC16X	191E-C30⊗11-CC10X
14.5...20	5.5	10	–	–	50	–	–	190E-C30⊗10-CC20X	191E-C30⊗11-CC20X
18...25	5.5	11	–	–	15	–	–	190E-C30⊗10-CC25X	191E-C30⊗11-CC25X
23...29	7.5	13	–	–	15	–	–	190E-C30⊗10-CC29X	191E-C30⊗11-CC29X
26.5...32	7.5	15	–	–	15	–	–	190E-C30⊗10-CC32X	191E-C30⊗11-CC32X
D-Frame MPCB with 100-C/104-C Contactors									
0.40...0.63	0.09	0.18	0.18	0.25	100	65	50	190E-C09⊗10-DA63X	191E-C09⊗11-DA63X
0.63...1.0	0.18	0.25	0.37	0.55	100	65	50	190E-C09⊗10-DB10X	191E-C09⊗11-DB10X
1.0...1.6	0.25	0.55	0.75	1.1	100	50	50	190E-C09⊗10-DB16X	191E-C09⊗11-DB16X
1.6...2.5	0.37	0.75	–	–	100	–	–	190E-C09⊗10-DB25X	191E-C09⊗11-DB25X
	–	–	1.1	–	–	50	–	190E-C12⊗10-DB25X	191E-C12⊗11-DB25X
	–	–	–	1.8	–	–	50	190E-C23⊗10-DB25X	191E-C23⊗11-DB25X
2.5...4.0	0.75	1.5	–	–	65	–	–	190E-C09⊗10-DB40X	191E-C09⊗11-DB40X
	–	–	2.2	–	–	50	–	190E-C12⊗10-DB40X	191E-C12⊗11-DB40X
	–	–	–	3.0	–	–	50	190E-C23⊗10-DB40X	191E-C23⊗11-DB40X
4.0...6.3	1.5	2.2	–	–	65	–	–	190E-C09⊗10-DB63X	191E-C09⊗11-DB63X
	–	–	3.0	–	–	50	–	190E-C12⊗10-DB63X	191E-C12⊗11-DB63X
	–	–	–	4.0	–	–	50	190E-C23⊗10-DB63X	191E-C23⊗11-DB63X
6.3...10	2.2	4	–	–	65	–	–	190E-C09⊗10-DC10X	191E-C09⊗11-DC10X
	–	–	5.5	–	–	50	–	190E-C12⊗10-DC10X	191E-C12⊗11-DC10X
	–	–	6.3	–	–	50	–	190E-C16⊗10-DC10X	191E-C16⊗11-DC10X
	–	–	–	7.5	–	–	50	190E-C30⊗10-DC10X	191E-C30⊗11-DC10X
10...16	4	7.5	10	10	65	50	–	190E-C23⊗10-DC16X	191E-C23⊗11-DC10X
14.5...20	5.5	10	11	10	65	–	–	190E-C23⊗10-DC20X	191E-C23⊗11-DC20X
18...25	5.5	11	13	10	65	–	–	190E-C23⊗10-DC25X	191E-C23⊗11-DC25X
23...29	7.5	13	15	15	65	–	–	190E-C30⊗10-DC29X	191E-C30⊗11-DC29X
26.5...32	7.5	15	15	15	65	–	–	190E-C30⊗10-DC32X	191E-C30⊗11-DC32X
30...36	–	15	–	–	65	–	–	190E-C30⊗10-DC36X	191E-C30⊗11-DC36X
	–	18.5	–	–	65	–	–	190E-C37⊗10-DC36X	191E-C37⊗11-DC36X
34...40	10	15	15	15	65	–	–	190E-C37⊗10-DC40X	191E-C37⊗11-DC40X

(1) kW ratings shown in the table are for reference. Final selection of the starter depends upon the actual motor full-load current.

⊗ Coil voltage code – see page 18.

Starters with Bulletin 100-E Contactors and Bulletin 140MT MPCBs

Table 12 - Type 2 Short-circuit Coordination

Motor Current Adjustment Range [A]	IEC kW Ratings for Standard Motors, 1500 rpm				Max. Short-circuit Current [kA]			Cat. No.
	Max kW, 50 Hz[1]				Type 2 Coordination			DOL Starters
	230V	415V	525V	690V	415V	525V	690V	
C-Frame MPCB with 100-E Contactors								
0.10...0.16	–	0.02	0.06	0.06	100	65	50	190E-E09⊗10-CA16X
0.16...0.25	–	0.04	0.09	0.09	100	65	50	190E-E09⊗10-CA25X
0.25...0.40	0.06	0.09	0.12	0.18	100	65	50	190E-E09⊗10-CA40X
0.40...0.63	0.09	0.18	0.18	0.25	100	65	50	190E-E09⊗10-CA63X
0.63...1.0	0.18	0.25	0.37	0.55	100	65	50	190E-E09⊗10-CB10X
1.0...1.6	0.25	0.55	0.75	1.1	100	50	50	190E-E09⊗10-CB16X
	–	–	–	1.1	–	–	50	190E-E26⊗10-CB16X
1.6...2.5	0.37	0.75	1.1	1.8	65	50	–	190E-E26⊗10-CB25X
2.5...4.0	0.75	1.5	2.2	3	65	–	–	190E-E26⊗10-CB40X
4.0...6.3	1.5	2.2	3	4	65	–	–	190E-E26⊗10-CB63X
6.3...10	2.2	4	6.3	7.5	65	–	–	190E-E26⊗10-CC10X
10...16	4	7.5	10	13	50	–	–	190E-E26⊗10-CC16X
14.5...20	5.5	10	11	15	50	–	–	190E-E26⊗10-CC20X
18...25	5.5	11	15	18.5	15	–	–	190E-E30⊗10-CC25X
23...29	7.5	13	18.5	18.5	15	–	–	190E-E30⊗10-CC29X
26.5...32	7.5	15	18.5	18.5	15	–	–	190E-E30⊗10-CC32X
D-Frame MPCB with 100-E Contactors								
0.40...0.63	0.09	0.18	0.18	0.25	100	65	50	190E-E09⊗10-DA63X
0.63...1.0	0.18	0.25	0.37	0.55	100	65	50	190E-E09⊗10-DB10X
1.0...1.6	0.25	0.55	0.75	–	100	50	–	190E-E09⊗10-DB16X
	–	–	–	1.1	–	–	50	190E-E26⊗10-DB16X
1.6...2.5	0.37	0.75	–	–	100	–	–	190E-E09⊗10-DB25X
	–	–	1.1	1.8	–	50	50	190E-E26⊗10-DB25X
2.5...4.0	0.75	1.5	2.2	3	65	50	50	190E-E26⊗10-DB40X
4.0...6.3	1.5	2.2	3	4	65	50	50	190E-E26⊗10-DB63X
6.3...10	2.2	4	6.3	7.5	65	50	50	190E-E26⊗10-DC10X
10...16	4	7.5	10	–	65	50	–	190E-E26⊗10-DC16X
14.5...20	5.5	10	–	–	65	–	–	190E-E26⊗10-DC20X
18...25	5.5	11	–	–	65	–	–	190E-E26⊗10-DC25X
23...29	6.5	11	–	–	65	–	–	190E-E26⊗10-DC29X
	7.5	13	–	–	65	–	–	190E-E30⊗10-DC29X
26.5...32	7.5	15	–	–	65	–	–	190E-E30⊗10-DC32X
30...36	–	15	–	–	65	–	–	190E-E30⊗10-DC36X
	–	18.5	–	–	65	–	–	190E-E36⊗10-DC36X
34...40	11	15	–	–	66	–	–	190E-E38⊗10-DC36X

(1) kW ratings shown in the table are for reference. Final selection of the starter depends upon the actual motor full-load current.

⊗ Coil voltage code – see page 18.

Coil Voltage Codes

The Cat. No. as listed is incomplete. Select a coil voltage code from the table below to complete the Cat. No.
Example: 120V, 60 Hz: Cat. No. 190E-K05⊗10-CA16X becomes Cat. No.190E-K05D10-CA16X.

Bulletin 100-K/104-K Miniature Contactors

AC Voltages [V]	24	110	120
50 Hz	–	D	–
60 Hz	–	–	D
50/60 Hz	KJ	–	–

DC Voltages [V]	24
Standard	ZJ
with Integrated Diode	DJ

Bulletin 100-C/104-C Standard Contactors

AC Voltages [V]	24	110	120	200...220	208...240	230	240	277	400...415	440	480
50 Hz	–	D	–	L	–	–	T	–	G	B	–
60 Hz	–	–	D	–	L	–	–	T	–	G	B
50/60 Hz	KJ	–	–	–	–	KF	–	–	–	–	–

DC Voltages [V]		24
100/104-C09...C37	Electronic with Integrated Diode	EJ

Bulletin 100-E Standard Contactors with Electronic Coils

V(1)	24V DC	24...60V AC, 20...60V DC	100...250V AC/DC	250...500V AC/DC
Standard AC/DC	–	KJ	KD	KN
Low Consumption AC/DC	–	EJ	–	–
Low Consumption/Faster Drop-out DC	QJ	–	–	–

(1) AC voltages are at 50/60 Hz.

For additional short-circuit rating information, see our Rockwell Automation Global SCCR Tool, rok.auto/sccr.

UL 60947-4-1 SCCR Ratings

Starters with Bulletin 100-K/104-K Contactors and Bulletin 140MT MPCBs

Table 13 - Suitable for Group Installation on load side of 140MT Manual Motor Controller; Type 1 Short-circuit Coordination Only

Cat. No.		MPCB	Motor Current Adjustment Range [A]	Connection Module	Reversing Power Wiring Kit	Min Contactor Size(1)	SCCR [kA] Type 1 Coordination		Max Fuse or Circuit Breaker per NEC [A]
DOL Starters	Reversing Starters						480V AC	600V AC	
C-Frame MPCB with 100-K/104-K Contactors									
190E-K05⊗10-CA16X	191E-K05⊗01-CA16X	140MT-C3E-A16	0.10...0.16	140MT-C-PEK12	100-KPR	100-K05	65	50	450
190E-K05⊗10-CA25X	191E-K05⊗01-CA25X	140MT-C3E-A25	0.16...0.25			100-K05	65	50	450
190E-K05⊗10-CA40X	191E-K05⊗01-CA40X	140MT-C3E-A40	0.25...0.40			100-K05	65	50	450
190E-K05⊗10-CA63X	191E-K05⊗01-CA63X	140MT-C3E-A63	0.40...0.63			100-K05	65	50	450
190E-K05⊗10-CB10X	191E-K05⊗01-CB10X	140MT-C3E-B10	0.63...1.0			100-K05	65	50	450
190E-K05⊗10-CB16X	191E-K05⊗01-CB16X	140MT-C3E-B16	1.0...1.6			100-K05	65	50	450
190E-K05⊗10-CB25X	191E-K05⊗01-CB25X	140MT-C3E-B25	1.6...2.5			100-K05	65	30	450
190E-K05⊗10-CB40X	191E-K05⊗01-CB40X	140MT-C3E-B40	2.5...4.0			100-K05	65	30	450
190E-K05⊗10-CB63X	191E-K05⊗01-CB63X	140MT-C3E-B63	4.0...6.3			100-K05	65	30	450
190E-K09⊗10-CB63X	191E-K09⊗01-CB63X	140MT-C3E-B63	4.0...6.3			100-K09	65	30	450
190E-K09⊗10-CC10X	191E-K09⊗01-CC10X	140MT-C3E-C10	6.3...10			100-K09	65	30	450
190E-K12⊗10-CC10X	191E-K12⊗01-CC10X	140MT-C3E-C10	6.3...10			100-K12	65	30	450
190E-K12⊗10-CC16X	191E-K12⊗01-CC16X	140MT-C3E-C16	10...16			100-K12	30	30	450

(1) Similar for other contactor configurations (DOL or reversing).

Table 14 - Suitable for Group Installation/Disconnecting Means on load side of 140MT Manual Motor Controller; Type 1 Short-circuit Coordination Only

Cat. No.		MPCB	Motor Current Adjustment Range [A]	Connection Module	Reversing Power Wiring Kit	Min Contactor Size(1)	SCCR [kA] Type 1 Coordination		Max Fuse or Circuit Breaker per NEC [A]
DOL Starters	Reversing Starters						480V AC	600V AC	
C-Frame MPCB with 100-K/104-K Contactors									
190E-K05⊗10-CA16X	191E-K05⊗01-CA16X	140MT-C3E-A16	0.10...0.16	140MT-C-PEK12	100-KPR	100-K05	65	50	450
190E-K05⊗10-CA25X	191E-K05⊗01-CA25X	140MT-C3E-A25	0.16...0.25			100-K05	65	50	450
190E-K05⊗10-CA40X	191E-K05⊗01-CA40X	140MT-C3E-A40	0.25...0.40			100-K05	65	50	450
190E-K05⊗10-CA63X	191E-K05⊗01-CA63X	140MT-C3E-A63	0.40...0.63			100-K05	65	50	450
190E-K05⊗10-CB10X	191E-K05⊗01-CB10X	140MT-C3E-B10	0.63...1.0			100-K05	65	50	450
190E-K05⊗10-CB16X	191E-K05⊗01-CB16X	140MT-C3E-B16	1.0...1.6			100-K05	65	50	450
190E-K05⊗10-CB25X	191E-K05⊗01-CB25X	140MT-C3E-B25	1.6...2.5			100-K05	65	30	450
190E-K05⊗10-CB40X	191E-K05⊗01-CB40X	140MT-C3E-B40	2.5...4.0			100-K05	65	30	450
190E-K05⊗10-CB63X	191E-K05⊗01-CB63X	140MT-C3E-B63	4.0...6.3			100-K05	65	30	450
190E-K09⊗10-CB63X	191E-K09⊗01-CB63X	140MT-C3E-B63	4.0...6.3			100-K09	65	30	450
190E-K09⊗10-CC10X	191E-K09⊗01-CC10X	140MT-C3E-C10	6.3...10			100-K09	65	30	450
190E-K12⊗10-CC10X	191E-K12⊗01-CC10X	140MT-C3E-C10	6.3...10			100-K12	65	30	450
190E-K12⊗10-CC16X	191E-K12⊗01-CC16X	140MT-C3E-C16	10...16			100-K12	30	30	450

(1) Similar for other contactor configurations (DOL or reversing).

Table 15 - 140MT Combination Motor Controller as Type F Combination; Type 1 Short-circuit Coordination Only

Cat. No.		MPCB	Motor Current Adjustment Range [A]	Connection Module	Reversing Power Wiring Kit	Min Contactor Size(1)	SCCR [kA] Type 1 Coordination		Max Fuse or Circuit Breaker per NEC [A]
DOL Starters	Reversing Starters						480V AC	600V AC	
C-Frame MPCB with 100-K/104-K Contactors									
190E-K05⊗10-CA16X	191E-K05⊗01-CA16X	140MT-C3E-A16	0.10...0.16	140MT-C-PEK12	100-KPR	100-K05	65	50	450
190E-K05⊗10-CA25X	191E-K05⊗01-CA25X	140MT-C3E-A25	0.16...0.25			100-K05	65	50	450
190E-K05⊗10-CA40X	191E-K05⊗01-CA40X	140MT-C3E-A40	0.25...0.40			100-K05	65	50	450
190E-K05⊗10-CA63X	191E-K05⊗01-CA63X	140MT-C3E-A63	0.40...0.63			100-K05	65	50	450
190E-K05⊗10-CB10X	191E-K05⊗01-CB10X	140MT-C3E-B10	0.63...1.0			100-K05	65	50	450
190E-K05⊗10-CB16X	191E-K05⊗01-CB16X	140MT-C3E-B16	1.0...1.6			100-K05	65	50	450
190E-K05⊗10-CB25X	191E-K05⊗01-CB25X	140MT-C3E-B25	1.6...2.5			100-K05	65	30	450
190E-K05⊗10-CB40X	191E-K05⊗01-CB40X	140MT-C3E-B40	2.5...4.0			100-K05	65	30	450
190E-K05⊗10-CB63X	191E-K05⊗01-CB63X	140MT-C3E-B63	4.0...6.3			100-K05	65	–	450
190E-K09⊗10-CB63X	191E-K09⊗01-CB63X	140MT-C3E-B63	4.0...6.3			100-K09	65	–	450
190E-K09⊗10-CC10X	191E-K09⊗01-CC10X	140MT-C3E-C10	6.3...10			100-K09	65	–	450
190E-K12⊗10-CC10X	191E-K12⊗01-CC10X	140MT-C3E-C10	6.3...10			100-K12	65	–	450
190E-K12⊗10-CC16X	191E-K12⊗01-CC16X	140MT-C3E-C16	10...16			100-K12	30	–	450

(1) Similar for other contactor configurations (DOL or reversing).

Starters with Bulletin 100-C/104-C Contactors and Bulletin 140MT MPCBs/MCPs

Table 16 - Suitable for Group Installation on load side of 140MT Manual Motor Controller; Type 1 Short-circuit Coordination Only

Cat. No.		MPCB	Motor Current Adjustment Range [A]	Connection Module	Reversing Power Wiring Kit	Min Contactor Size(1)	SCCR [kA] Type 1 Coordination		Max Fuse or Circuit Breaker per NEC [A]
DOL Starters	Reversing Starters						480V AC	600V AC	
C-Frame MPCB with 100-C/104-C Contactors									
190E-C09⊗10-CA16X	191E-C09⊗11-CA16X	140MT-C3E-A16	0.10...0.16	140MT-C-PEC23 or 140MT-C-PNC23	105-PW23	100-C09	65	50	450
190E-C09⊗10-CA25X	191E-C09⊗11-CA25X	140MT-C3E-A25	0.16...0.25			100-C09	65	50	450
190E-C09⊗10-CA40X	191E-C09⊗11-CA40X	140MT-C3E-A40	0.25...0.40			100-C09	65	50	450
190E-C09⊗10-CA63X	191E-C09⊗11-CA63X	140MT-C3E-A63	0.40...0.63			100-C09	65	50	450
190E-C09⊗10-CB10X	191E-C09⊗11-CB10X	140MT-C3E-B10	0.63...1.0			100-C09	65	50	450
190E-C09⊗10-CB16X	191E-C09⊗11-CB16X	140MT-C3E-B16	1.0...1.6			100-C09	65	50	450
190E-C09⊗10-CB25X	191E-C09⊗11-CB25X	140MT-C3E-B25	1.6...2.5			100-C09	65	30	450
190E-C09⊗10-CB40X	191E-C09⊗11-CB40X	140MT-C3E-B40	2.5...4.0			100-C09	65	30	450
190E-C09⊗10-CB63X	191E-C09⊗11-CB63X	140MT-C3E-B63	4.0...6.3			100-C09	65	30	450
190E-C09⊗10-CC10X	191E-C09⊗11-CC10X	140MT-C3E-C10	6.3...10			100-C09	65	30	450
190E-C12⊗10-CC16X	191E-C12⊗11-CC10X	140MT-C3E-C16	10...16			100-C12	30	30	450
190E-C16⊗10-CC16X	191E-C16⊗11-CC16X	140MT-C3E-C16	10...16			100-C16	30	30	450
190E-C16⊗10-CC20X	191E-C16⊗11-CC20X	140MT-C3E-C20	14.5...20			100-C16	30	30	450
190E-C23⊗10-CC25X	191E-C23⊗11-CC25X	140MT-C3E-C25	18...25			100-C23	30	18	450
190E-C30⊗10-CC25X	191E-C30⊗11-CC25X	140MT-C3E-C25	18...25	—	105-PW37	100-C30	30	18	450
190E-C30⊗10-CC29X	191E-C30⊗11-CC29X	140MT-C3E-C29	23...29			100-C30	30	10	450
190E-C37⊗10-CC32X	191E-C37⊗11-CC32X	140MT-C3E-C32	26.5...32			100-C37	30	10	450
D-Frame MPCB with 100-C/104-C Contactors									
190E-C09⊗10-DA63X	191E-C09⊗11-DA63X	140MT-D9E-A63	0.40...0.63	140MT-D-PEC23 or 140MT-D-PNC23	105-PW23	100-C09	65	50	450
190E-C09⊗10-DB10X	191E-C09⊗11-DB10X	140MT-D9E-B10	0.63...1.0			100-C09	65	50	450
190E-C09⊗10-DB16X	191E-C09⊗11-DB16X	140MT-D9E-B16	1.0...1.6			100-C09	65	50	450
190E-C09⊗10-DB25X	191E-C09⊗11-DB25X	140MT-D9E-B25	1.6...2.5			100-C09	65	30	450
190E-C09⊗10-DB40X	191E-C09⊗11-DB40X	140MT-D9E-B40	2.5...4.0			100-C09	65	30	450
190E-C09⊗10-DB63X	191E-C09⊗11-DB63X	140MT-D9E-B63	4.0...6.3			100-C09	65	30	450
190E-C09⊗10-DC10X	191E-C09⊗11-DC10X	140MT-D9E-C10	6.3...10			100-C09	65	30	450
190E-C12⊗10-DC16X	191E-C12⊗11-DC10X	140MT-D9E-C16	10...16			100-C12	65	30	450
190E-C16⊗10-DC16X	191E-C16⊗11-DC16X	140MT-D9E-C16	10...16			100-C16	65	30	450
190E-C23⊗10-DC20X	191E-C23⊗11-DC20X	140MT-D9E-C20	14.5...20			100-C23	65	30	450
190E-C23⊗10-DC25X	191E-C23⊗11-DC25X	140MT-D9E-C25	18...25			100-C23	50	30	450
190E-C30⊗10-DC25X	191E-C30⊗11-DC25X	140MT-D9E-C25	18...25	140MT-D-PEC37 or 140MT-D-PNC37	105-PW37	100-C30	50	30	450
190E-C30⊗10-DC29X	191E-C30⊗11-DC29X	140MT-D9E-C29	23...29			100-C30	50	30	450
190E-C37⊗10-DC32X	191E-C37⊗11-DC32X	140MT-D9E-C32	26.5...32			100-C37	50	30	450
190E-C37⊗10-DC36X	191E-C37⊗11-DC36X	140MT-D9E-C36	30...36			100-C37	30	30	450
190E-C37⊗10-DC40X	191E-C37⊗11-DC40X	140MT-D9E-C40	34...40			100-C37	30	30	450

(1) Similar for other contactor configurations (DOL or reversing).

Table 17 - Suitable for Group Installation/Disconnecting Means on load side of 140MT Manual Motor Controller; Type 1 Short-circuit Coordination Only

Cat. No.		MPCB	Motor Current Adjustment Range [A]	Connection Module	Reversing Power Wiring Kit	Min Contactor Size(1)	SCCR [kA] Type 1 Coordination		Max Fuse or Circuit Breaker per NEC [A]
DOL Starters	Reversing Starters						480V AC	600V AC	
C-Frame MPCB with 100-C/104-C Contactors									
190E-C09⊗10-CA16X	191E-C09⊗11-CA16X	140MT-C3E-A16	0.10...0.16	140MT-C-PEC23 or 140MT-C-PNC23	105-PW23	100-C09	65	50	450
190E-C09⊗10-CA25X	191E-C09⊗11-CA25X	140MT-C3E-A25	0.16...0.25			100-C09	65	50	450
190E-C09⊗10-CA40X	191E-C09⊗11-CA40X	140MT-C3E-A40	0.25...0.40			100-C09	65	50	450
190E-C09⊗10-CA63X	191E-C09⊗11-CA63X	140MT-C3E-A63	0.40...0.63			100-C09	65	50	450
190E-C09⊗10-CB10X	191E-C09⊗11-CB10X	140MT-C3E-B10	0.63...1.0			100-C09	65	50	450
190E-C09⊗10-CB16X	191E-C09⊗11-CB16X	140MT-C3E-B16	1.0...1.6			100-C09	65	50	450
190E-C09⊗10-CB25X	191E-C09⊗11-CB25X	140MT-C3E-B25	1.6...2.5			100-C09	65	30	450
190E-C09⊗10-CB40X	191E-C09⊗11-CB40X	140MT-C3E-B40	2.5...4.0			100-C09	65	30	450
190E-C09⊗10-CB63X	191E-C09⊗11-CB63X	140MT-C3E-B63	4.0...6.3			100-C09	65	30	450
190E-C09⊗10-CC10X	191E-C09⊗11-CC10X	140MT-C3E-C10	6.3...10			100-C09	65	30	450
190E-C12⊗10-CC16X	191E-C12⊗11-CC10X	140MT-C3E-C16	10...16			100-C12	30	30	450
190E-C16⊗10-CC16X	191E-C16⊗11-CC16X	140MT-C3E-C16	10...16			100-C16	30	30	450
190E-C16⊗10-CC20X	191E-C16⊗11-CC20X	140MT-C3E-C20	14.5...20			100-C16	30	10	450
190E-C23⊗10-CC25X	191E-C23⊗11-CC25X	140MT-C3E-C25	18...25			100-C23	10	5	450
190E-C30⊗10-CC25X	191E-C30⊗11-CC25X	140MT-C3E-C25	18...25	—	105-PW37	100-C30	30	5	450
190E-C30⊗10-CC29X	191E-C30⊗11-CC29X	140MT-C3E-C29	23...29			100-C30	10	—	450
190E-C37⊗10-CC32X	191E-C37⊗11-CC32X	140MT-C3E-C32	26.5...32			100-C37	10	—	450
D-Frame MPCB with 100-C/104-C Contactors									
190E-C09⊗10-DA63X	191E-C09⊗11-DA63X	140MT-D9E-A63	0.40...0.63	140MT-D-PEC23 or 140MT-D-PNC23	105-PW23	100-C09	65	50	450
190E-C09⊗10-DB10X	191E-C09⊗11-DB10X	140MT-D9E-B10	0.63...1.0			100-C09	65	50	450
190E-C09⊗10-DB16X	191E-C09⊗11-DB16X	140MT-D9E-B16	1.0...1.6			100-C09	65	50	450
190E-C09⊗10-DB25X	191E-C09⊗11-DB25X	140MT-D9E-B25	1.6...2.5			100-C09	65	30	450
190E-C09⊗10-DB40X	191E-C09⊗11-DB40X	140MT-D9E-B40	2.5...4.0			100-C09	65	30	450
190E-C09⊗10-DB63X	191E-C09⊗11-DB63X	140MT-D9E-B63	4.0...6.3			100-C09	65	30	450
190E-C09⊗10-DC10X	191E-C09⊗11-DC10X	140MT-D9E-C10	6.3...10			100-C09	65	30	450
190E-C12⊗10-DC16X	191E-C12⊗11-DC10X	140MT-D9E-C16	10...16			100-C12	65	30	450
190E-C16⊗10-DC16X	191E-C16⊗11-DC16X	140MT-D9E-C16	10...16			100-C16	65	30	450
190E-C23⊗10-DC20X	191E-C23⊗11-DC20X	140MT-D9E-C20	14.5...20			100-C23	65	30	450
190E-C23⊗10-DC25X	191E-C23⊗11-DC25X	140MT-D9E-C25	18...25			100-C23	50	30	450
190E-C30⊗10-DC25X	191E-C30⊗11-DC25X	140MT-D9E-C25	18...25	140MT-D-PEC37 or 140MT-D-PNC37	105-PW37	100-C30	50	30	450
190E-C30⊗10-DC29X	191E-C30⊗11-DC29X	140MT-D9E-C29	23...29			100-C30	50	30	450
190E-C37⊗10-DC32X	191E-C37⊗11-DC32X	140MT-D9E-C32	26.5...32			100-C37	30	18	450
190E-C37⊗10-DC36X	191E-C37⊗11-DC36X	140MT-D9E-C36	30...36			100-C37	30	18	450
190E-C37⊗10-DC40X	191E-C37⊗11-DC40X	140MT-D9E-C40	34...40			100-C37	30	18	450

(1) Similar for other contactor configurations (DOL or reversing).

Table 18 - 140MT Combination Motor Controller as Type F Combination; Type 1 Short-circuit Coordination Only

Cat. No.		MPCB	Motor Current Adjustment Range [A]	Connection Module	Reversing Power Wiring Kit	Min Contactor Size(1)	SCCR [kA] Type 1 Coordination		Max Fuse or Circuit Breaker per NEC [A]
DOL Starters	Reversing Starters						480V AC	600V AC	
C-Frame MCP with 100-C/104-C Contactors									
190E-C09⊗10-CA16X-TE	191E-C09⊗11-CA16X-TE	140MT-C3E-A16	0.10...0.16	140MT-C-PEC23 or 140MT-C-PNC23	105-PW23	100-C09	65	50	450
190E-C09⊗10-CA25X-TE	191E-C09⊗11-CA25X-TE	140MT-C3E-A25	0.16...0.25			100-C09	65	50	450
190E-C09⊗10-CA40X-TE	191E-C09⊗11-CA40X-TE	140MT-C3E-A40	0.25...0.40			100-C09	65	50	450
190E-C09⊗10-CA63X-TE	191E-C09⊗11-CA63X-TE	140MT-C3E-A63	0.40...0.63			100-C09	65	50	450
190E-C09⊗10-CB10X-TE	191E-C09⊗11-CB10X-TE	140MT-C3E-B10	0.63...1.0			100-C09	65	50	450
190E-C09⊗10-CB16X-TE	191E-C09⊗11-CB16X-TE	140MT-C3E-B16	1.0...1.6			100-C09	65	50	450
190E-C09⊗10-CB25X-TE	191E-C09⊗11-CB25X-TE	140MT-C3E-B25	1.6...2.5			100-C09	65	30	450
190E-C09⊗10-CB40X-TE	191E-C09⊗11-CB40X-TE	140MT-C3E-B40	2.5...4.0			100-C09	65	30	450
190E-C09⊗10-CB63X-TE	191E-C09⊗11-CB63X-TE	140MT-C3E-B63	4.0...6.3			100-C09	65	–	450
190E-C09⊗10-CC10X-TE	191E-C09⊗11-CC10X-TE	140MT-C3E-C10	6.3...10			100-C09	65	–	450
190E-C12⊗10-CC16X-TE	191E-C12⊗11-CC10X-TE	140MT-C3E-C16	10...16			100-C12	30	–	450
190E-C16⊗10-CC16X-TE	191E-C16⊗11-CC16X-TE	140MT-C3E-C16	10...16			100-C16	30	–	450
D-Frame MCP with 100-C/104-C Contactors									
190E-C09⊗10-DA63X-TE	191E-C09⊗11-DA63X-TE	140MT-D9E-A63	0.40...0.63	140MT-D-PEC23 or 140MT-D-PNC23	105-PW23	100-C09	65	50	450
190E-C09⊗10-DB10X-TE	191E-C09⊗11-DB10X-TE	140MT-D9E-B10	0.63...1.0			100-C09	65	50	450
190E-C09⊗10-DB16X-TE	191E-C09⊗11-DB16X-TE	140MT-D9E-B16	1.0...1.6			100-C09	65	50	450
190E-C09⊗10-DB25X-TE	191E-C09⊗11-DB25X-TE	140MT-D9E-B25	1.6...2.5			100-C09	65	30	450
190E-C09⊗10-DB40X-TE	191E-C09⊗11-DB40X-TE	140MT-D9E-B40	2.5...4.0			100-C09	65	30	450
190E-C09⊗10-DB63X-TE	191E-C09⊗11-DB63X-TE	140MT-D9E-B63	4.0...6.3			100-C09	65	30	450
190E-C09⊗10-DC10X-TE	191E-C09⊗11-DC10X-TE	140MT-D9E-C10	6.3...10			100-C09	65	30	450
190E-C12⊗10-DC16X-TE	191E-C12⊗11-DC10X-TE	140MT-D9E-C16	10...16			100-C12	65	30	450
190E-C16⊗10-DC16X-TE	191E-C16⊗11-DC16X-TE	140MT-D9E-C16	10...16			100-C16	65	30	450
190E-C23⊗10-DC20X-TE	191E-C23⊗11-DC20X-TE	140MT-D9E-C20	14.5...20			100-C23	65	–	450
190E-C23⊗10-DC25X-TE	191E-C23⊗11-DC25X-TE	140MT-D9E-C25	18...25			100-C23	50	–	450
190E-C30⊗10-DC25X-TE	191E-C30⊗11-DC25X-TE	140MT-D9E-C29	23...29	140MT-D-PEC37 or 140MT-D-PNC37	105-PW37	100-C30	50	–	450
190E-C37⊗10-DC32X-TE	191E-C37⊗11-DC32X-TE	140MT-D9E-C32	26.5...32			100-C37	30	–	450
190E-C37⊗10-DC36X-TE	191E-C37⊗11-DC36X-TE	140MT-D9E-C36	30...36			100-C37	30	–	450
190E-C37⊗10-DC40X-TE	191E-C37⊗11-DC40X-TE	140MT-D9E-C40	34...40			100-C37	30	–	450

(1) Similar for other contactor configurations (DOL or reversing).

Starters with Bulletin 100-E Contactors and Bulletin 140MT MPCBs/MCPs

Table 19 - Suitable for Group Installation on load side of 140MT Manual Motor Controller; Type 1 Short-circuit Coordination Only

Cat. No. DOL Starters	MPCB	Motor Current Adjustment Range [A]	Connection Module	Min Contactor Size(1)	SCCR [kA] Type 1 Coordination 480V AC	SCCR [kA] Type 1 Coordination 600V AC	Max Fuse or Circuit Breaker per NEC [A]
C-Frame MPCB with 100-E Contactors							
190E-E09⊗10-CA16X	140MT-C3E-A16	0.10...0.16	140MT-C-PE16 or 140MT-C-PSE16	100-E09	65	50	450
190E-E09⊗10-CA25X	140MT-C3E-A25	0.16...0.25		100-E09	65	50	450
190E-E09⊗10-CA40X	140MT-C3E-A40	0.25...0.40		100-E09	65	50	450
190E-E09⊗10-CA63X	140MT-C3E-A63	0.40...0.63		100-E09	65	50	450
190E-E09⊗10-CB10X	140MT-C3E-B10	0.63...1.0		100-E09	65	50	450
190E-E09⊗10-CB16X	140MT-C3E-B16	1.0...1.6		100-E09	65	50	450
190E-E09⊗10-CB25X	140MT-C3E-B25	1.6...2.5		100-E09	65	30	450
190E-E09⊗10-CB40X	140MT-C3E-B40	2.5...4.0		100-E09	65	30	450
190E-E09⊗10-CB63X	140MT-C3E-B63	4.0...6.3		100-E09	65	30	450
190E-E09⊗10-CC10X	140MT-C3E-C10	6.3...10		100-E09	65	30	450
190E-E12⊗10-CC16X	140MT-C3E-C16	10...16		100-E12	30	30	450
190E-E16⊗10-CC16X	140MT-C3E-C16	10...16		100-E16	30	30	450
190E-E16⊗10-CC20X	140MT-C3E-C20	14.5...20		100-E16	30	30	450
190E-E26⊗10-CC25X	140MT-C3E-C25	18...25	140MT-C-PE38 or 140MT-C-PSE38	100-E26	30	18	450
190E-E30⊗10-CC29X	140MT-C3E-C29	23...29		100-E30	30	10	450
190E-E38⊗10-CC32X	140MT-C3E-C32	26.5...32		100-E38	30	10	450
D-Frame MPCB with 100-E Contactors							
190E-E09⊗10-DA63X	140MT-D9E-A63	0.40...0.63	140MT-D-PE16 or 140MT-D-PSE16	100-E09	65	50	450
190E-E09⊗10-DB10X	140MT-D9E-B10	0.63...1.0		100-E09	65	50	450
190E-E09⊗10-DB16X	140MT-D9E-B16	1.0...1.6		100-E09	65	50	450
190E-E09⊗10-DB25X	140MT-D9E-B25	1.6...2.5		100-E09	65	30	450
190E-E09⊗10-DB40X	140MT-D9E-B40	2.5...4.0		100-E09	65	30	450
190E-E09⊗10-DB63X	140MT-D9E-B63	4.0...6.3		100-E09	65	30	450
190E-E09⊗10-DC10X	140MT-D9E-C10	6.3...10		100-E09	65	30	450
190E-E12⊗10-DC16X	140MT-D9E-C16	10...16		100-E12	65	30	450
190E-E16⊗10-DC16X	140MT-D9E-C16	10...16		100-E16	65	30	450
190E-E26⊗10-DC20X	140MT-D9E-C20	14.5...20	140MT-D-PE38 or 140MT-D-PSE38	100-E26	65	30	450
190E-E26⊗10-DC25X	140MT-D9E-C25	18...25		100-E26	50	30	450
190E-E30⊗10-DC29X	140MT-D9E-C29	23...29		100-E30	50	30	450
190E-E38⊗10-DC32X	140MT-D9E-C32	26.5...32		100-E38	50	30	450
190E-E38⊗10-DC36X	140MT-D9E-C36	30...36		100-E38	30	30	450
190E-E38⊗10-DC40X	140MT-D9E-C40	34...40	140MT-D-PE38 or 140MT-D-PSE38	100-E38	30	30	450

(1) Similar for other contactor configurations (DOL or reversing).

Table 20 - Suitable for Group Installation/Disconnecting Means on load side of 140MT Manual Motor Controller; Type 1 Short-circuit Coordination Only

Cat. No. DOL Starters	MPCB	Motor Current Adjustment Range [A]	Connection Module	Min Contactor Size(1)	SCCR [kA] Type 1 Coordination 480V AC	SCCR [kA] Type 1 Coordination 600V AC	Max Fuse or Circuit Breaker per NEC [A]
C-Frame MPCB with 100-E Contactors							
190E-E09⊗10-CA16X	140MT-C3E-A16	0.10...0.16	140MT-C-PE16 or 140MT-C-PSE16	100-E09	65	50	450
190E-E09⊗10-CA25X	140MT-C3E-A25	0.16...0.25		100-E09	65	50	450
190E-E09⊗10-CA40X	140MT-C3E-A40	0.25...0.40		100-E09	65	50	450
190E-E09⊗10-CA63X	140MT-C3E-A63	0.40...0.63		100-E09	65	50	450
190E-E09⊗10-CB10X	140MT-C3E-B10	0.63...1.0		100-E09	65	50	450
190E-E09⊗10-CB16X	140MT-C3E-B16	1.0...1.6		100-E09	65	50	450
190E-E09⊗10-CB25X	140MT-C3E-B25	1.6...2.5		100-E09	65	30	450
190E-E09⊗10-CB40X	140MT-C3E-B40	2.5...4.0		100-E09	65	30	450
190E-E09⊗10-CB63X	140MT-C3E-B63	4.0...6.3		100-E09	65	30	450
190E-E09⊗10-CC10X	140MT-C3E-C10	6.3...10		100-E09	65	30	450
190E-E12⊗10-CC16X	140MT-C3E-C16	10...16		100-E12	30	30	450
190E-E16⊗10-CC16X	140MT-C3E-C16	10...16		100-E16	30	30	450
190E-E16⊗10-CC20X	140MT-C3E-C20	14.5...20		100-E16	30	10	450
190E-E26⊗10-CC25X	140MT-C3E-C25	18...25	140MT-C-PE38 or 140MT-C-PSE38	100-E26	10	5	450
190E-E30⊗10-CC29X	140MT-C3E-C29	23...29		100-E30	10	–	450
190E-E38⊗10-CC32X	140MT-C3E-C32	26.5...32		100-E38	10	–	450
D-Frame MPCB with 100-E Contactors							
190E-E09⊗10-DA63X	140MT-D9E-A63	0.40...0.63	140MT-D-PE16 or 140MT-D-PSE16	100-E09	65	50	450
190E-E09⊗10-DB10X	140MT-D9E-B10	0.63...1.0		100-E09	65	50	450
190E-E09⊗10-DB16X	140MT-D9E-B16	1.0...1.6		100-E09	65	50	450
190E-E09⊗10-DB25X	140MT-D9E-B25	1.6...2.5		100-E09	65	30	450
190E-E09⊗10-DB40X	140MT-D9E-B40	2.5...4.0		100-E09	65	30	450
190E-E09⊗10-DB63X	140MT-D9E-B63	4.0...6.3		100-E09	65	30	450
190E-E09⊗10-DC10X	140MT-D9E-C10	6.3...10		100-E09	65	30	450
190E-E12⊗10-DC16X	140MT-D9E-C16	10...16		100-E12	65	30	450
190E-E16⊗10-DC16X	140MT-D9E-C16	10...16		100-E16	65	30	450
190E-E26⊗10-DC20X	140MT-D9E-C20	14.5...20	140MT-D-PE38 or 140MT-D-PSE38	100-E26	65	30	450
190E-E26⊗10-DC25X	140MT-D9E-C25	18...25		100-E26	50	30	450
190E-E30⊗10-DC29X	140MT-D9E-C29	23...29		100-E30	50	30	450
190E-E38⊗10-DC32X	140MT-D9E-C32	26.5...32		100-E38	30	18	450
190E-E38⊗10-DC36X	140MT-D9E-C36	30...36		100-E38	30	18	450
190E-E38⊗10-DC40X	140MT-D9E-C40	34...40	140MT-D-PE38 or 140MT-D-PSE38	100-E38	30	18	450

(1) Similar for other contactor configurations (DOL or reversing).

Table 21 - 140MT Combination Motor Controller as Type F Combination; Type 1 Short-circuit Coordination Only

Cat. No. DOL Starters	MPCB	Motor Current Adjustment Range [A]	Connection Module	Min Contactor Size(1)	SCCR [kA] Type 1 Coordination 480V AC	SCCR [kA] Type 1 Coordination 600V AC	Max Fuse or Circuit Breaker per NEC [A]
C-Frame MCP with 100-E Contactors							
190E-E09⊗10-CA16X-TE	140MT-C3E-A16	0.10...0.16	140MT-C-PE16 or 140MT-C-PSE16	100-E09	65	50	450
190E-E09⊗10-CA25X-TE	140MT-C3E-A25	0.16...0.25		100-E09	65	50	450
190E-E09⊗10-CA40X-TE	140MT-C3E-A40	0.25...0.40		100-E09	65	50	450
190E-E09⊗10-CA63X-TE	140MT-C3E-A63	0.40...0.63		100-E09	65	50	450
190E-E09⊗10-CB10X-TE	140MT-C3E-B10	0.63...1.0		100-E09	65	50	450
190E-E09⊗10-CB16X-TE	140MT-C3E-B16	1.0...1.6		100-E09	65	50	450
190E-E09⊗10-CB25X-TE	140MT-C3E-B25	1.6...2.5		100-E09	65	30	450
190E-E09⊗10-CB40X-TE	140MT-C3E-B40	2.5...4.0		100-E09	65	30	450
190E-E09⊗10-CB63X-TE	140MT-C3E-B63	4.0...6.3		100-E09	65	–	450
190E-E09⊗10-CC10X-TE	140MT-C3E-C10	6.3...10		100-E09	65	–	450
190E-E12⊗10-CC16X-TE	140MT-C3E-C16	10...16		100-E12	30	–	450
190E-E16⊗10-CC16X-TE	140MT-C3E-C16	10...16		100-E16	30	–	450
D-Frame MCP with 100-E Contactors							
190E-E09⊗10-DA63X-TE	140MT-D9E-A63	0.40...0.63	140MT-D-PE16 or 140MT-D-PSE16	100-E09	65	50	450
190E-E09⊗10-DB10X-TE	140MT-D9E-B10	0.63...1.0		100-E09	65	50	450
190E-E09⊗10-DB16X-TE	140MT-D9E-B16	1.0...1.6		100-E09	65	50	450
190E-E09⊗10-DB25X-TE	140MT-D9E-B25	1.6...2.5		100-E09	65	30	450
190E-E09⊗10-DB40X-TE	140MT-D9E-B40	2.5...4.0		100-E09	65	30	450
190E-E09⊗10-DB63X-TE	140MT-D9E-B63	4.0...6.3		100-E09	65	30	450
190E-E09⊗10-DC10X-TE	140MT-D9E-C10	6.3...10		100-E09	65	30	450
190E-E12⊗10-DC16X-TE	140MT-D9E-C16	10...16		100-E12	65	30	450
190E-E16⊗10-DC16X-TE	140MT-D9E-C16	10...16		100-E16	65	30	450
190E-E26⊗10-DC20X-TE	140MT-D9E-C20	14.5...20	140MT-D-PE38 or 140MT-D-PSE38	100-E26	65	–	450
190E-E26⊗10-DC25X-TE	140MT-D9E-C25	18...25		100-E26	50	–	450
190E-E30⊗10-DC29X-TE	140MT-D9E-C29	23...29		100-E30	50	–	450
190E-E38⊗10-DC32X-TE	140MT-D9E-C32	26.5...32		100-E38	30	–	450
190E-E38⊗10-DC36X-TE	140MT-D9E-C36	30...36		100-E38	30	–	450
190E-E38⊗10-DC40X-TE	140MT-D9E-C40	34...40	140MT-D-PE38 or 140MT-D-PSE38	100-E38	30	–	450

(1) Similar for other contactor configurations (DOL or reversing).

IEC 60947-4-1 SCCR Ratings

Starters with Bulletin 100-K/104-K Contactors and Bulletin 140MT MPCBs

Table 22 - IEC 60947-4-1, Type 1 Short-circuit Coordination

Cat. No.		MPCB	Motor Current Adjustment Range [A]	Connection Module	Reversing Power Wiring Kit	Min Contactor Size(1)	SCCR [kA]	
							Type 1 Coordination	
DOL Starters	Reversing Starters						415V AC	525V AC
C-Frame MPCB with 100-K/104-K Contactors								
190E-K05⊗10-CA16X	191E-K05⊗01-CA16X	140MT-C3E-A16	0.10...0.16	140MT-C-PEK12	100-KPR	100-K05	65	50
190E-K05⊗10-CA25X	191E-K05⊗01-CA25X	140MT-C3E-A25	0.16...0.25			100-K05	65	50
190E-K05⊗10-CA40X	191E-K05⊗01-CA40X	140MT-C3E-A40	0.25...0.40			100-K05	65	50
190E-K05⊗10-CA63X	191E-K05⊗01-CA63X	140MT-C3E-A63	0.40...0.63			100-K05	65	50
190E-K05⊗10-CB10X	191E-K05⊗01-CB10X	140MT-C3E-B10	0.63...1.0			100-K05	65	50
190E-K05⊗10-CB16X	191E-K05⊗01-CB16X	140MT-C3E-B16	1.0...1.6			100-K05	65	50
190E-K05⊗10-CB25X	191E-K05⊗01-CB25X	140MT-C3E-B25	1.6...2.5			100-K05	65	30
190E-K05⊗10-CB40X	191E-K05⊗01-CB40X	140MT-C3E-B40	2.5...4.0			100-K05	65	30
190E-K05⊗10-CB63X	191E-K05⊗01-CB63X	140MT-C3E-B63	4.0...6.3			100-K05	65	30
190E-K09⊗10-CB63X	191E-K09⊗01-CB63X	140MT-C3E-B63	4.0...6.3			100-K09	65	30
190E-K09⊗10-CC10X	191E-K09⊗01-CC10X	140MT-C3E-C10	6.3...10			100-K09	65	30
190E-K12⊗10-CC10X	191E-K12⊗01-CC10X	140MT-C3E-C10	6.3...10			100-K12	65	30
190E-K12⊗10-CC16X	191E-K12⊗01-CC16X	140MT-C3E-C16	10...16			100-K12	30	30

(1) Similar for other contactor configurations (DOL or reversing).

Starters with Bulletin 100-C/104-C Contactors and Bulletin 140MT MPCBs/MCPs

Table 23 - IEC 60947-4-1, Type 2 Short-circuit Coordination

Cat. No.		Motor Current Adjustment Range [A]	Connection Module	Reversing Power Wiring Kit	Min Contactor Size(1)	SCCR [kA]		
						Type 2 Coordination		
DOL Starters	Reversing Starters					415V AC	525V AC	690V AC
C-Frame MPCB with 100-C/104-C Contactors								
190E-C09⊗10-CA16X	191E-C09⊗11-CA16X	0.10...0.16	140MT-C-PEC23 or 140MT-C-PNC23	105-PW23	100-C09	100	65	50
190E-C09⊗10-CA25X	191E-C09⊗11-CA25X	0.16...0.25			100-C09	100	65	50
190E-C09⊗10-CA40X	191E-C09⊗11-CA40X	0.25...0.40			100-C09	100	65	50
190E-C09⊗10-CA63X	191E-C09⊗11-CA63X	0.40...0.63			100-C09	100	65	50
190E-C09⊗10-CB10X	191E-C09⊗11-CB10X	0.63...1.0			100-C09	100	65	50
190E-C09⊗10-CB16X	191E-C09⊗11-CB16X	1.0...1.6			100-C09	100	50	50
190E-C23⊗10-CB25X	191E-C23⊗11-CB25X	1.6...2.5			100-C23	65	50	–
190E-C23⊗10-CB40X	191E-C23⊗11-CB40X	2.5...4.0			100-C23	65	–	–
190E-C23⊗10-CB63X	191E-C23⊗11-CB63X	4.0...6.3			100-C23	65	–	–
190E-C23⊗10-CC10X	191E-C23⊗11-CC10X	6.3...10			100-C23	65	–	–
190E-C30⊗10-CC16X	191E-C30⊗11-CC10X	10...16		105-PW37	100-C30	50	–	–
190E-C30⊗10-CC20X	191E-C30⊗11-CC20X	14.5...20			100-C30	50	–	–
190E-C30⊗10-CC25X	191E-C30⊗11-CC25X	18...25			100-C30	15	–	–
190E-C30⊗10-CC29X	191E-C30⊗11-CC29X	23...29			100-C30	15	–	–
190E-C30⊗10-CC32X	191E-C30⊗11-CC32X	26.5...32			100-C30	15	–	–
D-Frame MPCB with 100-C/104-C Contactors								
190E-C09⊗10-DA63X	191E-C09⊗11-DA63X	0.40...0.63	140MT-D-PEC23 or 140MT-D-PNC23	105-PW23	100-C09	100	65	50
190E-C09⊗10-DB10X	191E-C09⊗11-DB10X	0.63...1.0			100-C09	100	65	50
190E-C09⊗10-DB16X	191E-C09⊗11-DB16X	1.0...1.6			100-C09	100	50	50
190E-C09⊗10-DB25X	191E-C09⊗11-DB25X	1.6...2.5			100-C09	100	50	50
					100-C12	–	50	–
					100-C23	–	–	50
190E-C09⊗10-DB40X	191E-C09⊗11-DB40X	2.5...4.0			100-C09	65	50	50
					100-C12	–	50	–
					100-C23	–	–	50
190E-C09⊗10-DB63X	191E-C09⊗11-DB63X	4.0...6.3			100-C09	65	50	50
					100-C12	–	50	–
					100-C23	–	–	50
190E-C09⊗10-DC10X	191E-C09⊗11-DC10X	6.3...10			100-C09	65	50	50
					100-C12	–	50	–
					100-C30	–	–	50
190E-C23⊗10-DC16X	191E-C23⊗11-DC10X	10...16			100-C23	65	50	–
190E-C23⊗10-DC20X	191E-C23⊗11-DC20X	14.5...20			100-C23	65	–	–
190E-C23⊗10-DC25X	191E-C23⊗11-DC25X	18...25			100-C23	65	–	–
190E-C30⊗10-DC29X	191E-C30⊗11-DC29X	23...29	140MT-D-PEC37 or 140MT-D-PNC37	105-PW37	100-C30	65	–	–
190E-C30⊗10-DC32X	191E-C30⊗11-DC32X	26.5...32			100-C30	65	–	–
190E-C30⊗10-DC36X	191E-C30⊗11-DC36X	30...36			100-C30	65	–	–
190E-C30⊗10-DC40X	191E-C30⊗11-DC40X	34...40			100-C37	65	–	–

(1) Similar for other contactor configurations (DOL or reversing).

Starters with Bulletin 100-E Contactors and Bulletin 140MT MPCBs

Table 24 - Type 2 Short-circuit Coordination

Cat. No. DOL Starters	Motor Current Adjustment Range [A]	Connection Module	Min Contactor Size[1]	SCCR [kA] Type 2 Coordination 415V AC	525V AC	690V AC
C-Frame MPCB with 100-E Contactors						
190E-E09⊗10-CA16X	0.10...0.16	140MT-C-PE16 or 140MT-C-PSE16	100-E09	100	65	50
190E-E09⊗10-CA25X	0.16...0.25		100-E09	100	65	50
190E-E09⊗10-CA40X	0.25...0.40		100-E09	100	65	50
190E-E09⊗10-CA63X	0.40...0.63		100-E09	100	65	50
190E-E09⊗10-CB10X	0.63...1.0		100-E09	100	65	50
190E-E26⊗10-CB16X	1.0...1.6		100-E09	100	50	50
190E-E26⊗10-CB25X	1.6...2.5	140MT-C-PE38 or 140MT-C-PSE38	100-E26	65	50	–
190E-E26⊗10-CB40X	2.5...4.0		100-E26	65	–	–
190E-E26⊗10-CB63X	4.0...6.3		100-E26	65	–	–
190E-E26⊗10-CC10X	6.3...10		100-E26	65	–	–
190E-E26⊗10-CC16X	10...16		100-E26	50	–	–
190E-E26⊗10-CC20X	14.5...20		100-E26	50	–	–
190E-E30⊗10-CC25X	18...25		100-E30	15	–	–
190E-E30⊗10-CC29X	23...29		100-E30	15	–	–
190E-E30⊗10-CC32X	26.5...32		100-E30	15	–	–
D-Frame MPCB with 100-E Contactors						
190E-E09⊗10-DA63X	0.40...0.63	140MT-D-PE16 or 140MT-D-PSE16	100-E09	100	65	50
190E-E09⊗10-DB10X	0.63...1.0		100-E09	100	65	50
190E-E09⊗10-DB16X	1.0...1.6		100-E09	100	50	–
190E-E26⊗10-DB16X	1.0...1.6	140MT-D-PE38 or 140MT-D-PSE38	100-E26	–	–	50
190E-E09⊗10-DB16X	1.6...2.5	140MT-D-PE16 or 140MT-D-PSE16	100-E09	100	–	–
190E-E26⊗10-DB25X	1.6...2.5	140MT-D-PE38 or 140MT-D-PSE38	100-E26	–	50	50
190E-E26⊗10-DB40X	2.5...4.0		100-E26	65	50	50
190E-E26⊗10-DB63X	4.0...6.3		100-E26	65	50	50
190E-E26⊗10-DC10X	6.3...10		100-E26	65	50	50
190E-E26⊗10-DC16X	10...16		100-E26	65	50	–
190E-E26⊗10-DC20X	14.5...20		100-E26	65	–	–
190E-E26⊗10-DC25X	18...25		100-E26	65	–	–
190E-E26⊗10-DC29X	23...29		100-E26	65	–	–
190E-E30⊗10-DC29X	23...29		100-E30	65	–	–
190E-E30⊗10-DC32X	26.5...32		100-E30	65	–	–
190E-E30⊗10-DC36X	30...36		100-E30	65	–	–
190E-E38⊗10-DC36X	30...36		100-E38	65	–	–
190E-E38⊗10-DC40X	34...40		100-E38	65	–	–

(1) Similar for other contactor configurations (DOL or reversing).

The figures in this section illustrate how to assemble a Bulletin 190 Eco Starter in the field. Starter Cat. Nos. that are listed in this publication are fully assembled.

Starters with Bulletin 100-K Miniature IEC Contactors

Figure 2 - 190E-K05...K09 Direct-on-line Starter Assembly

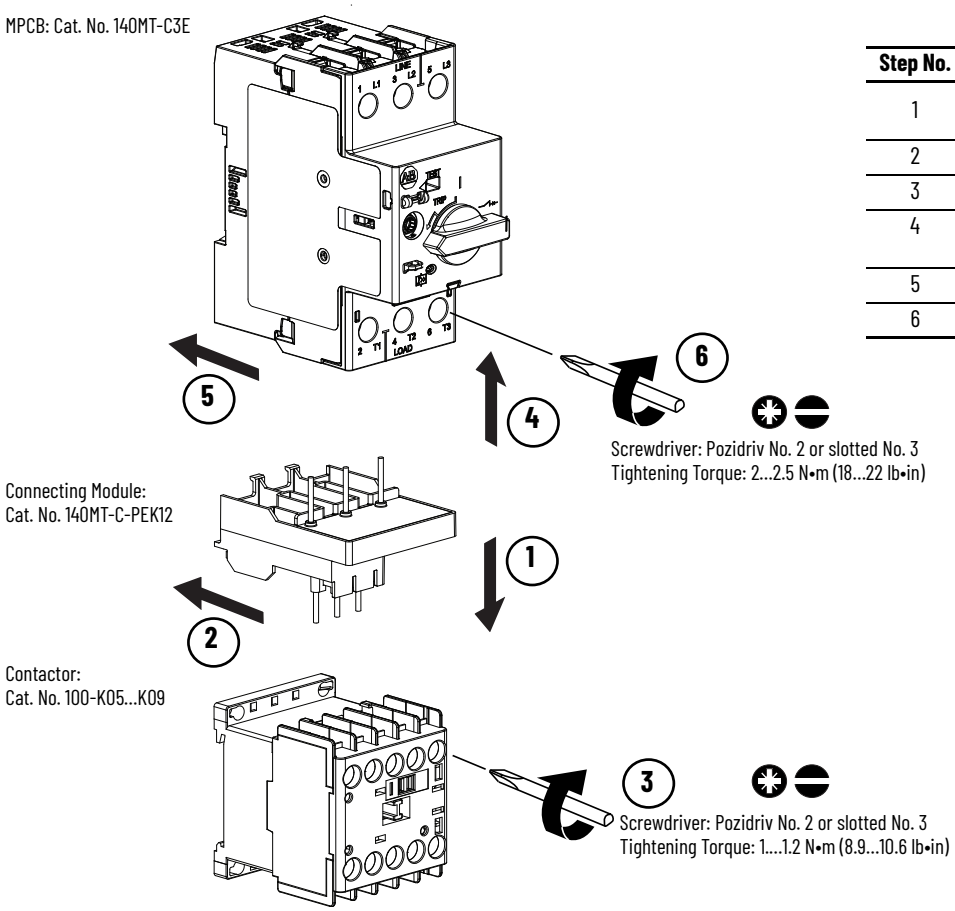

Step No.	Procedure
1	Insert the lower connecting module prongs into the contactor terminals
2	Slide the connecting module into place
3	Tighten the terminal screws on the contactor
4	Insert the upper connecting module prongs into the MPCB terminals
5	Slide the connecting module into place
6	Tighten the terminal screws on the MPCB

Figure 3 - 191E-K05...K09 Reversing Starter Assembly

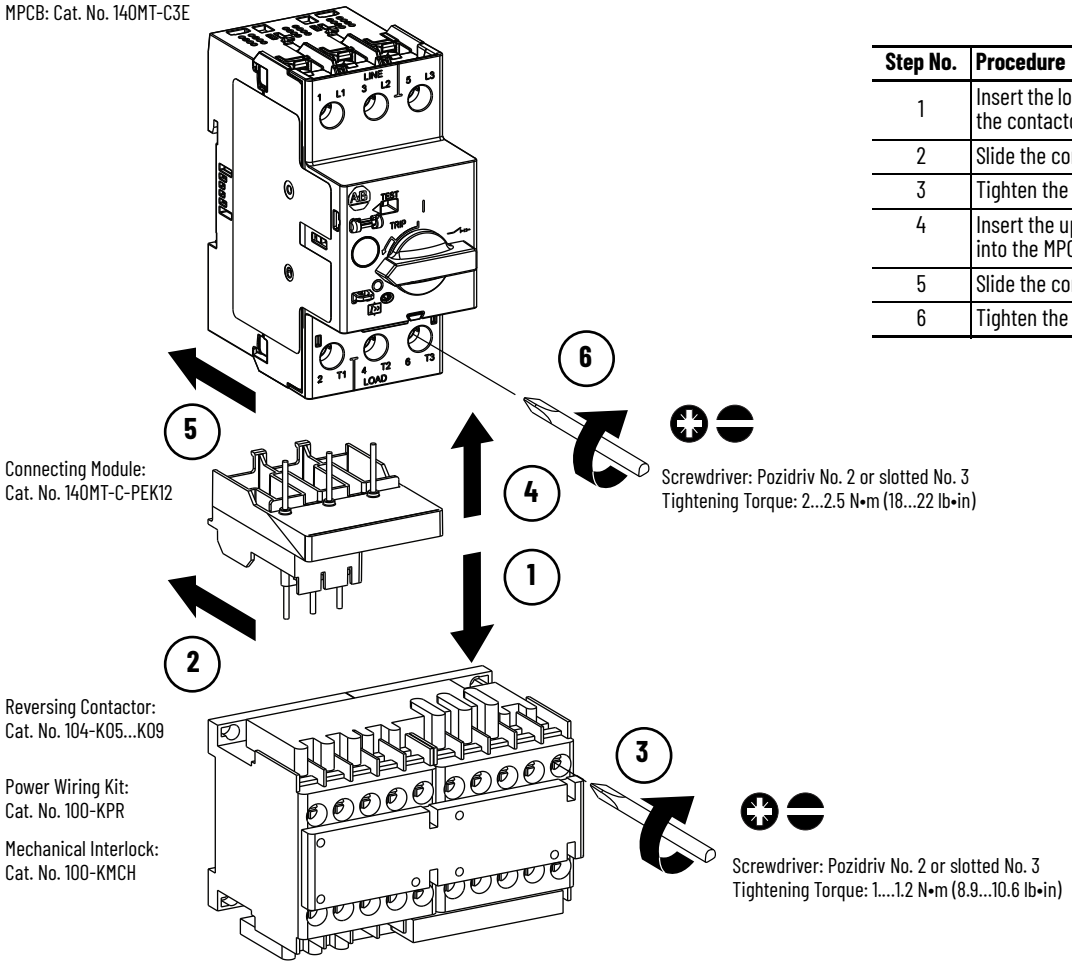

Step No.	Procedure
1	Insert the lower connecting module prongs into the contactor terminals
2	Slide the connecting module into place
3	Tighten the terminal screws on the contactor
4	Insert the upper connecting module prongs into the MPCB terminals
5	Slide the connecting module into place
6	Tighten the terminal screws on the MPCB

Starters with Bulletin 100-C IEC Contactors

Figure 4 - 190E-C09...C23 Direct-on-line Starter Assembly

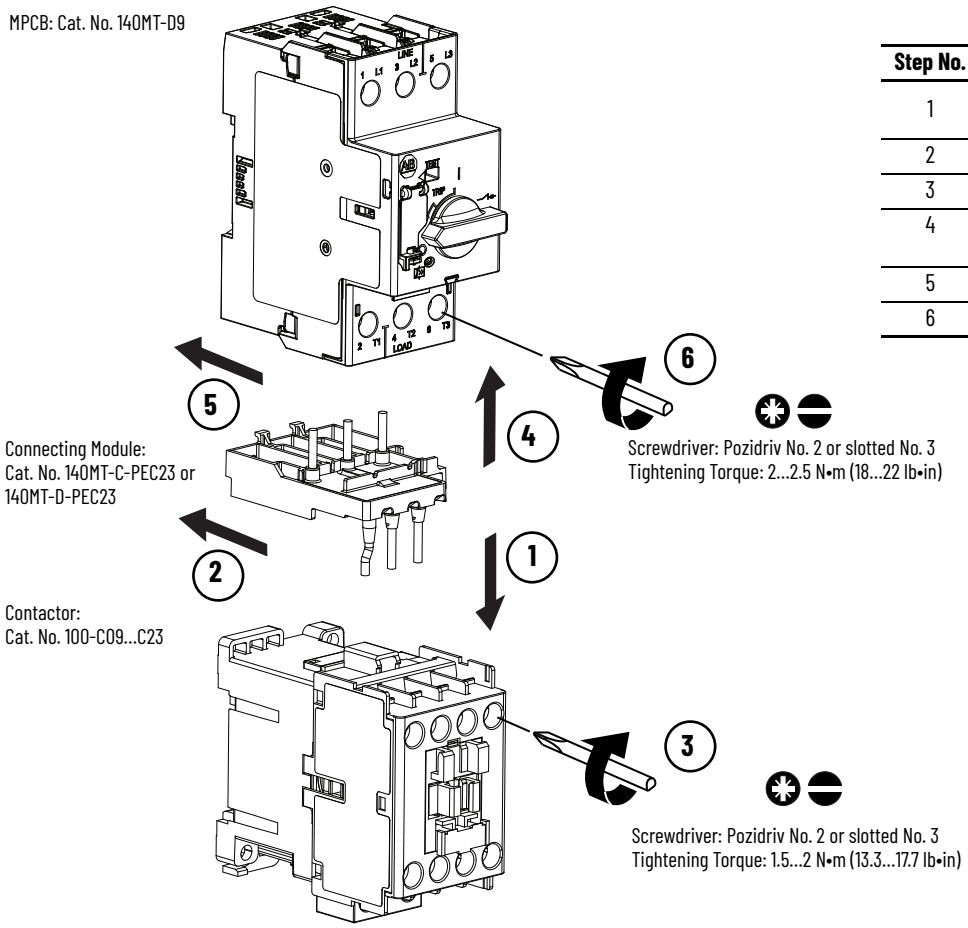

Step No.	Procedure
1	Insert the lower connecting module prongs into the contactor terminals
2	Slide the connecting module into place
3	Tighten the terminal screws on the contactor
4	Insert the upper connecting module prongs into the MPCB terminals
5	Slide the connecting module into place
6	Tighten the terminal screws on the MPCB

Figure 5 - 191E-C09...C23 Reversing Starter Assembly

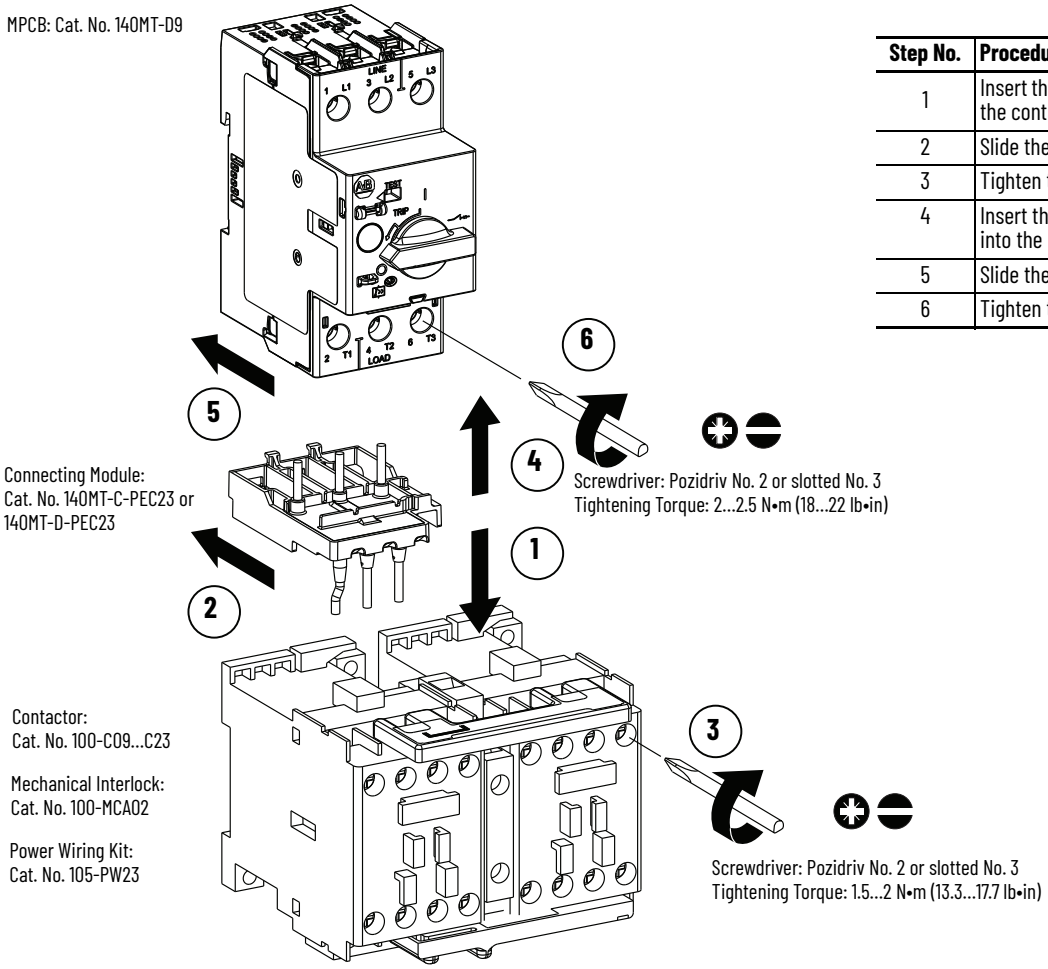

Step No.	Procedure
1	Insert the lower connecting module prongs into the contactor terminals
2	Slide the connecting module into place
3	Tighten the terminal screws on the contactor
4	Insert the upper connecting module prongs into the MPCB terminals
5	Slide the connecting module into place
6	Tighten the terminal screws on the MPCB

Figure 6 - 190E-C30...C37 Direct-on-line Starter Assembly

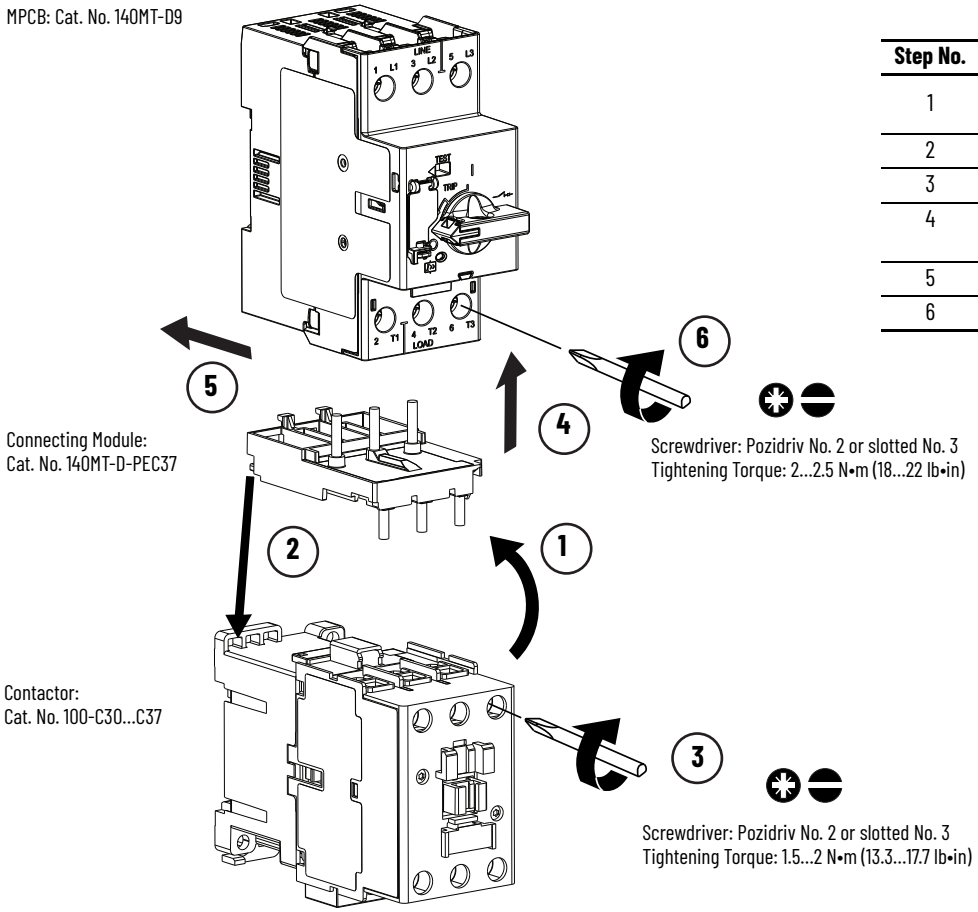

Step No.	Procedure
1	Insert the lower connecting module prongs into the contactor terminals
2	Slide the connecting module into place
3	Tighten the terminal screws on the contactor
4	Insert the upper connecting module prongs into the MPCB terminals
5	Slide the connecting module into place
6	Tighten the terminal screws on the MPCB

Figure 7 - 191E-C30...C37 Reversing Starter Assembly

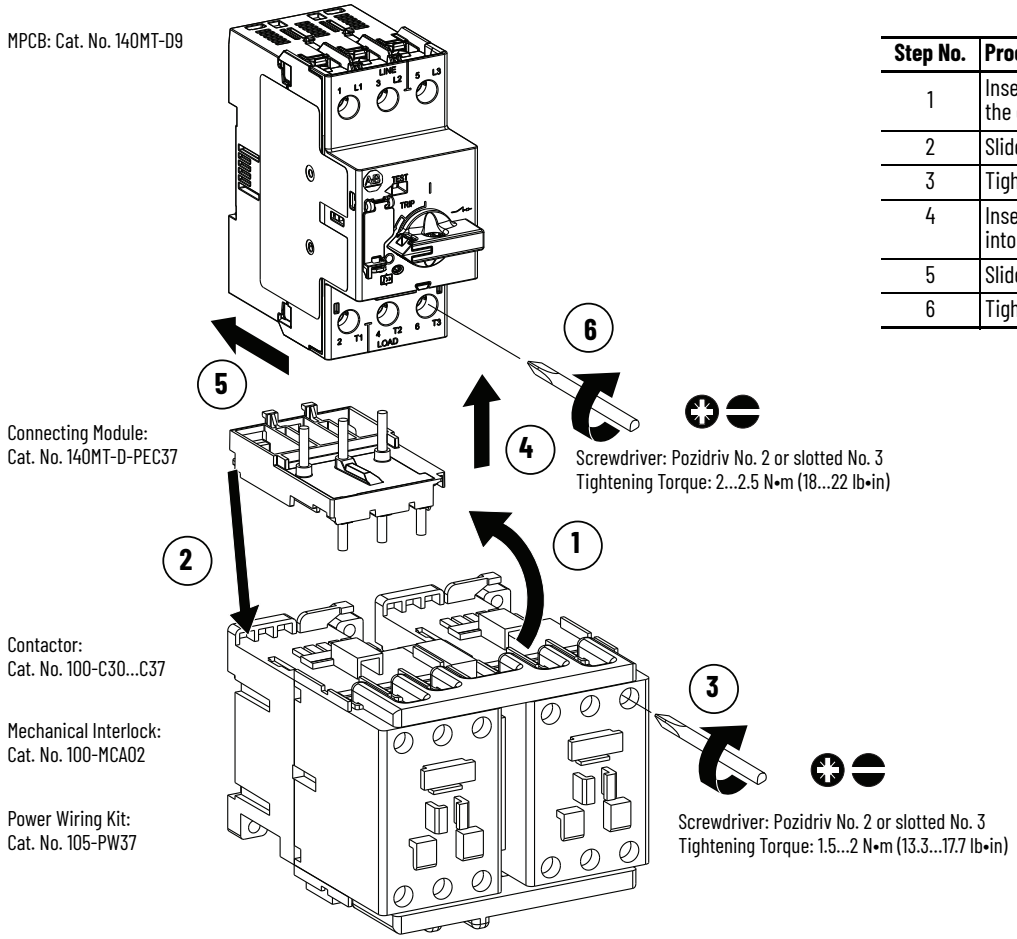

Step No.	Procedure
1	Insert the lower connecting module prongs into the contactor terminals
2	Slide the connecting module into place
3	Tighten the terminal screws on the contactor
4	Insert the upper connecting module prongs into the MPCB terminals
5	Slide the connecting module into place
6	Tighten the terminal screws on the MPCB

Starters with Bulletin 100-E IEC Contactors

Figure 8 - 190-E09...E16 Direct-on-line Starter Assembly

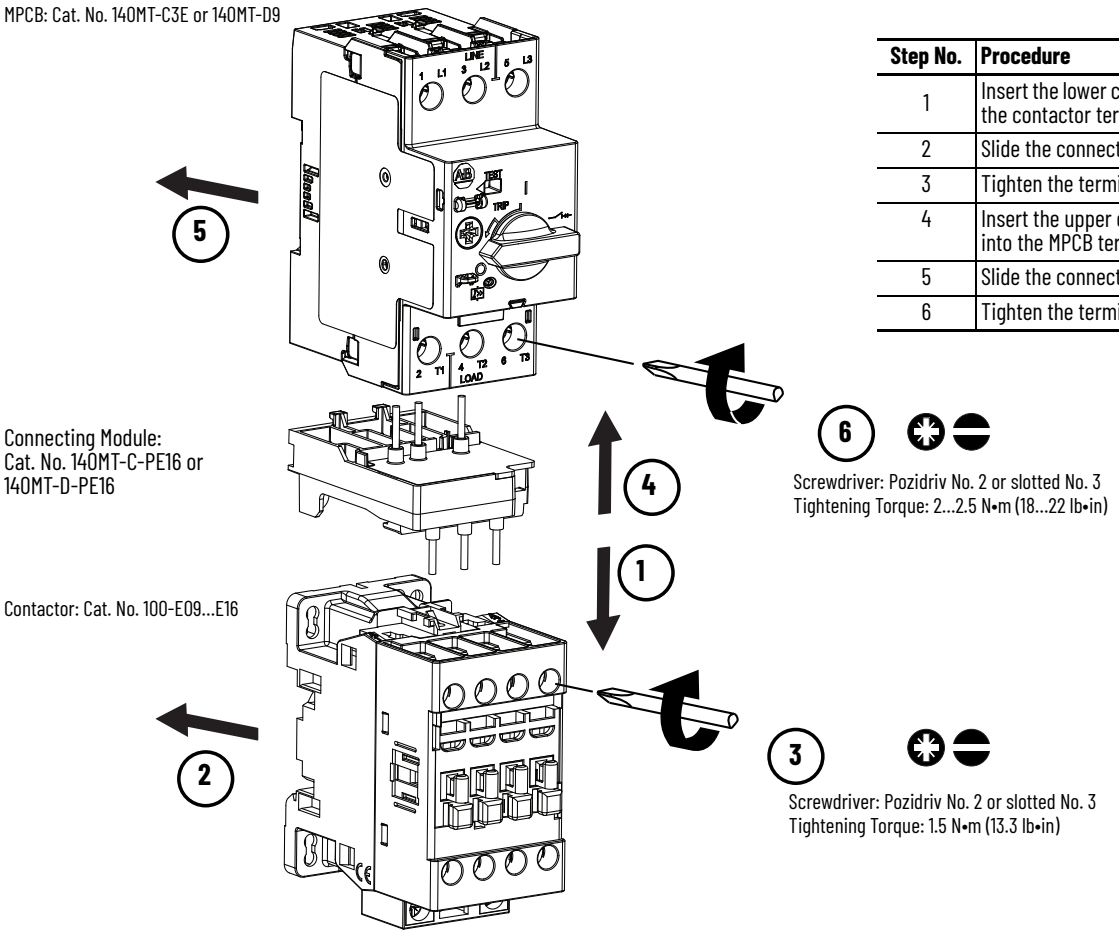

Step No.	Procedure
1	Insert the lower connecting module prongs into the contactor terminals
2	Slide the connecting module into place
3	Tighten the terminal screws on the contactor
4	Insert the upper connecting module prongs into the MPCB terminals
5	Slide the connecting module into place
6	Tighten the terminal screws on the MPCB

Figure 9 - 190-E26...E38 Direct-on-line Starter Assembly

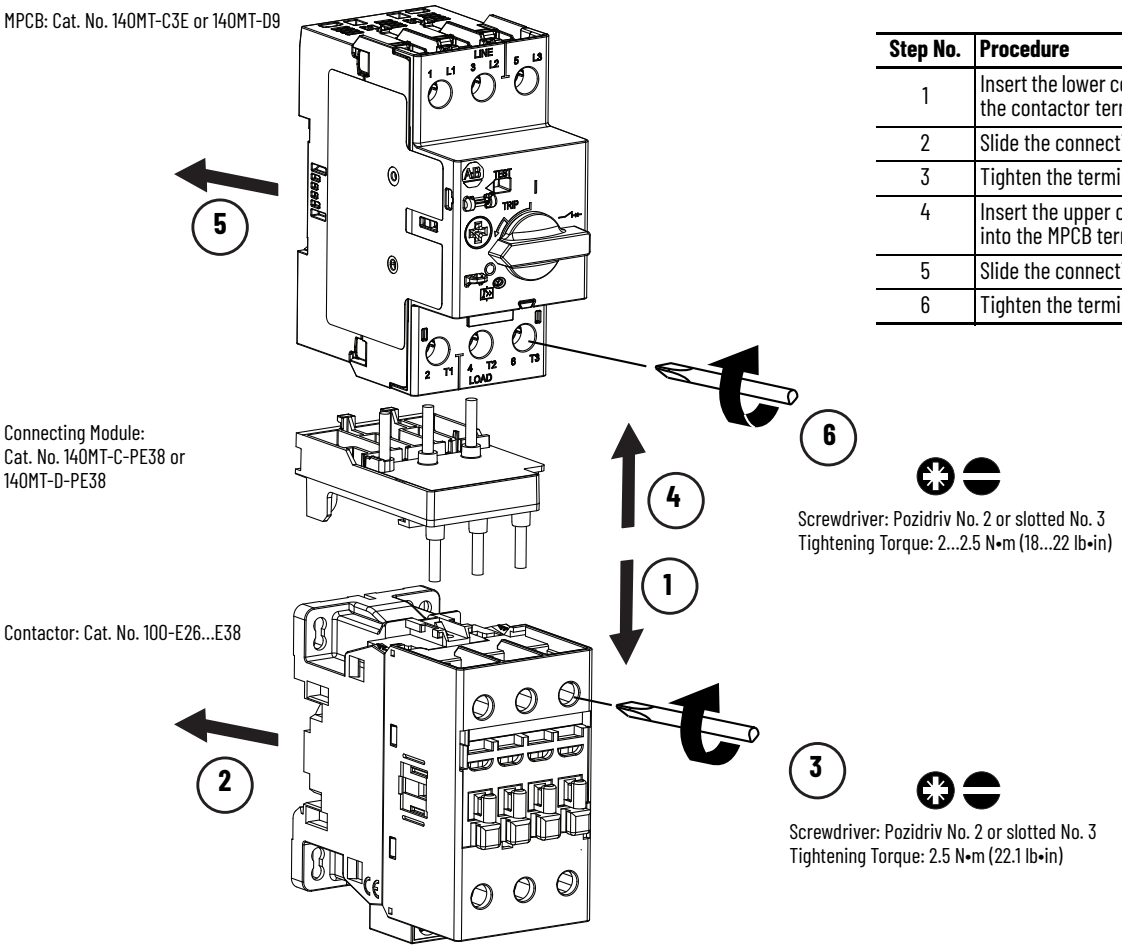

Step No.	Procedure
1	Insert the lower connecting module prongs into the contactor terminals
2	Slide the connecting module into place
3	Tighten the terminal screws on the contactor
4	Insert the upper connecting module prongs into the MPCB terminals
5	Slide the connecting module into place
6	Tighten the terminal screws on the MPCB

Dimensions are shown in millimeters (inches). Dimensions are not intended for manufacturing purposes.

Figure 10 - Mounting Position

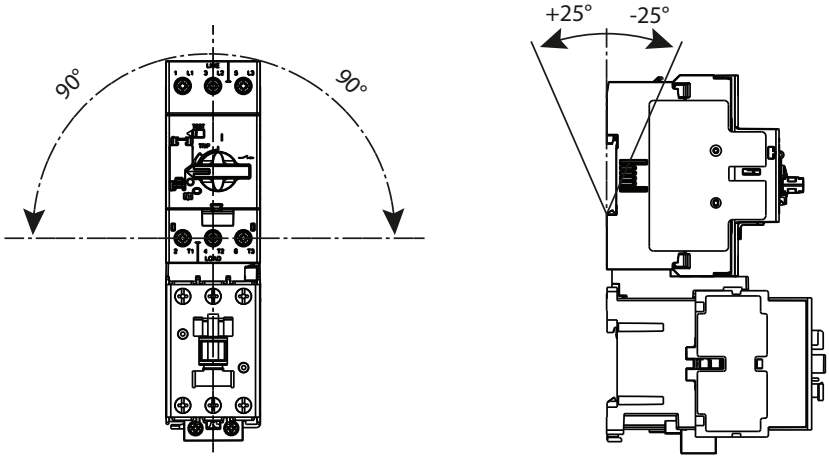

Starters with Bulletin 100-K Miniature IEC Contactors

Figure 11 - Non-reversing Starters with 100-K05...K12 Contactors

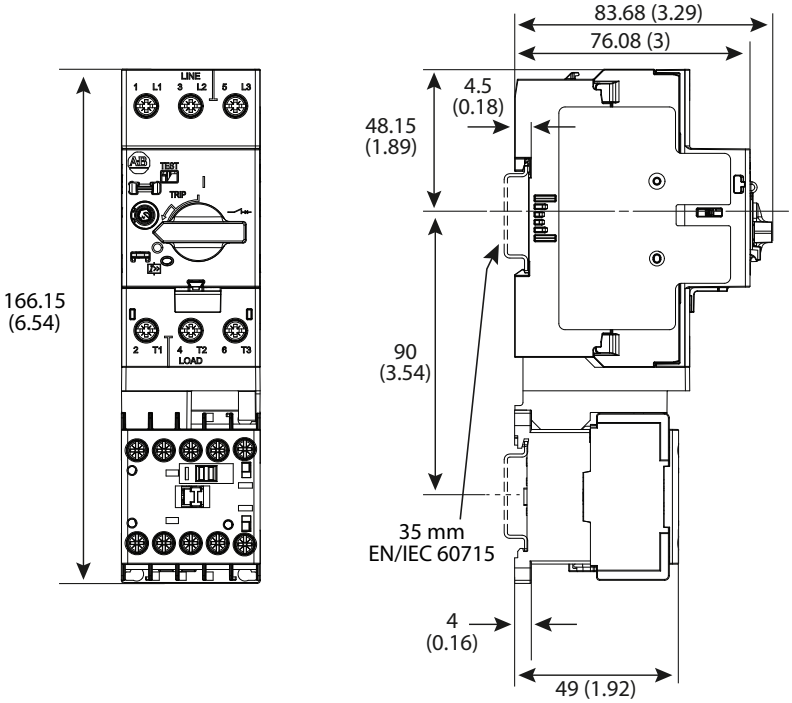

Figure 12 - Reversing Starters with 104-K05...K12 Contactors

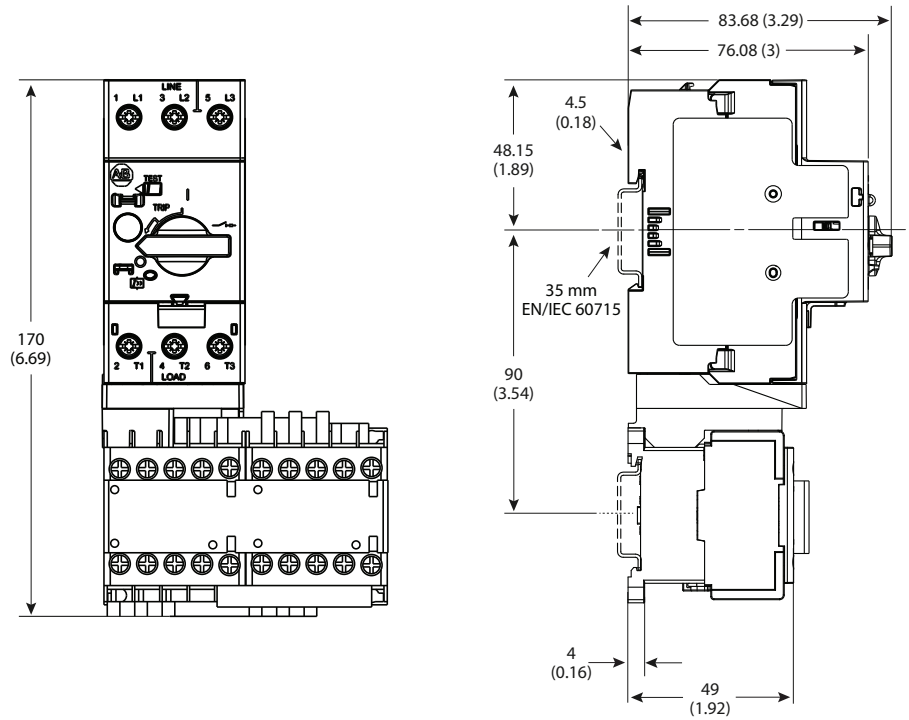

Starters with Bulletin 100-C IEC Contactors

Figure 13 - Non-reversing Starters with 100-C09...C23 Contactors

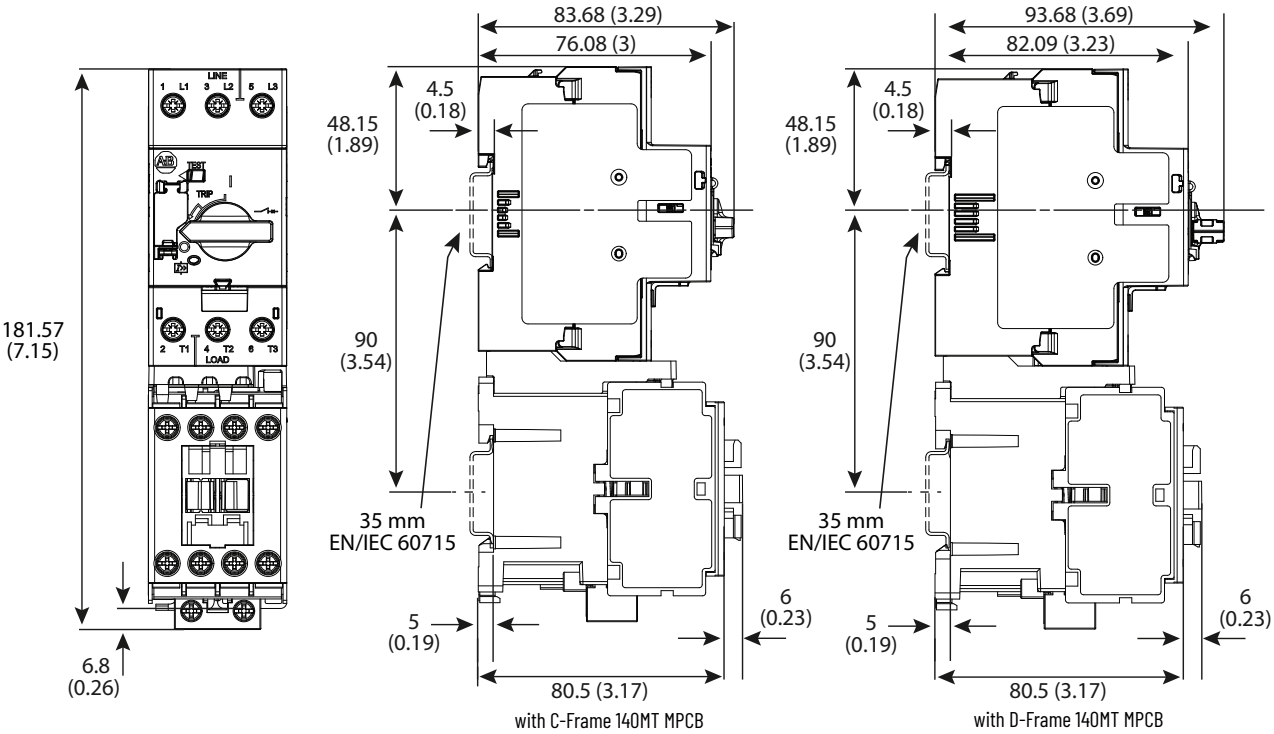

Figure 14 - Reversing Starters with 100-C09...C23 Contactors

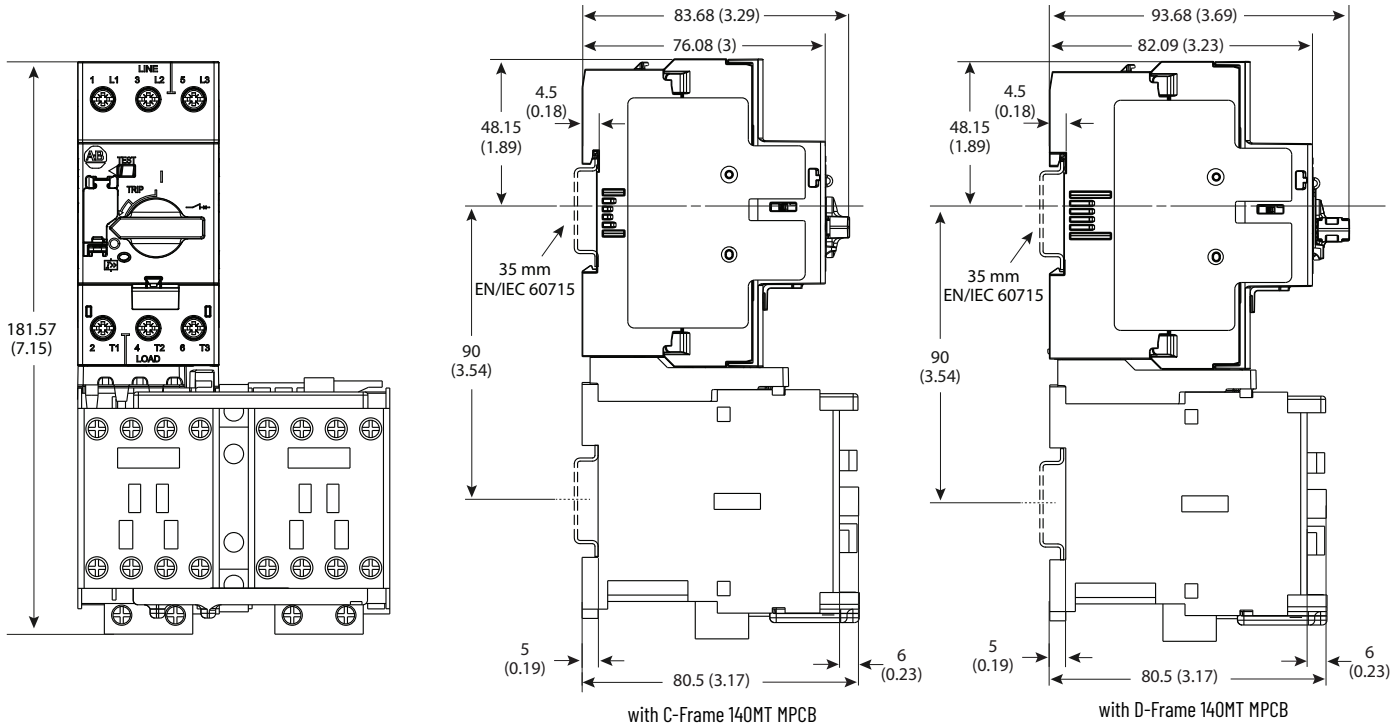

Figure 15 - Non-reversing Starters with 100-C30...C37 Contactors

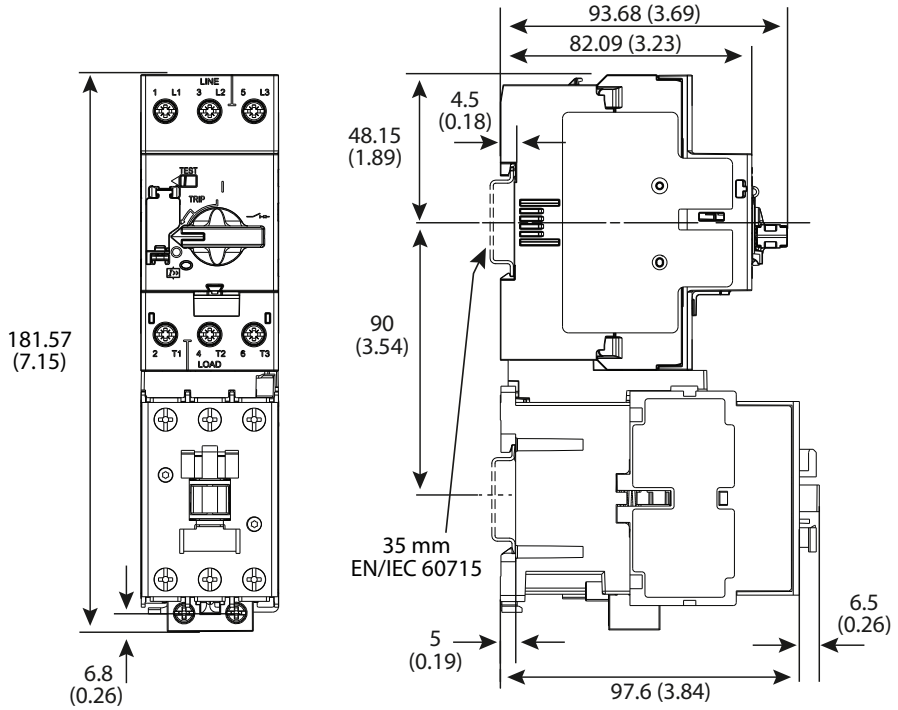

Figure 16 - Reversing Starters with 100-C30...C37 Contactors

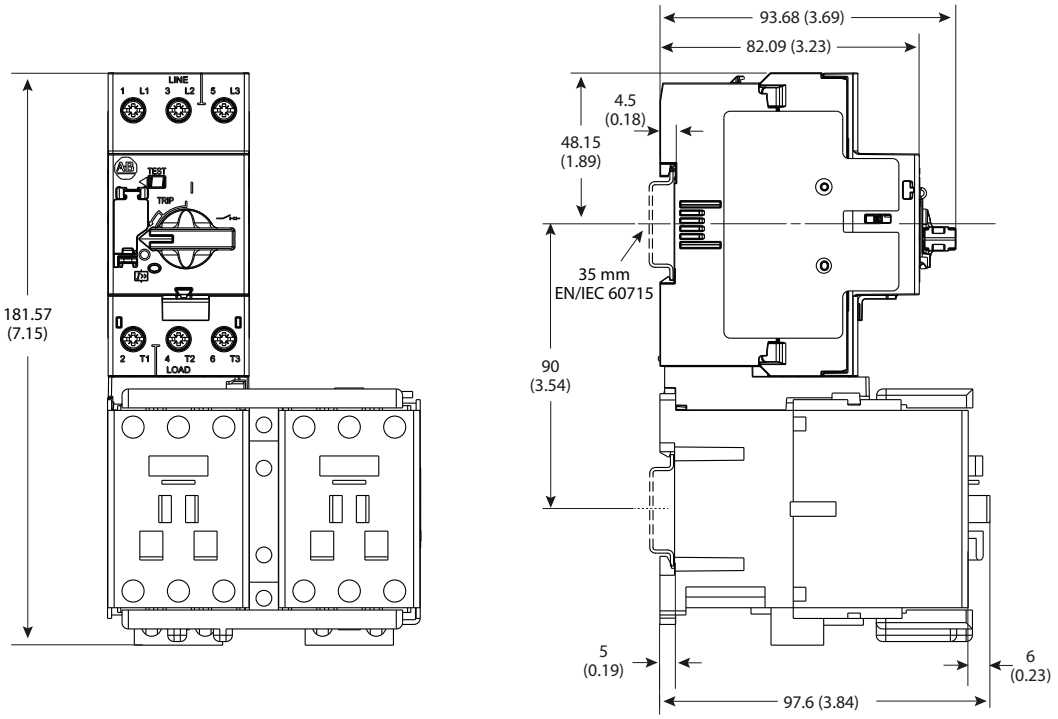

Starters with Bulletin 100-E IEC Contactors

Figure 17 - Non-reversing Starters with 100-E09...E16 Contactors

For contactors with QJ coils, add 20 mm (0.79 in.) to the depth.

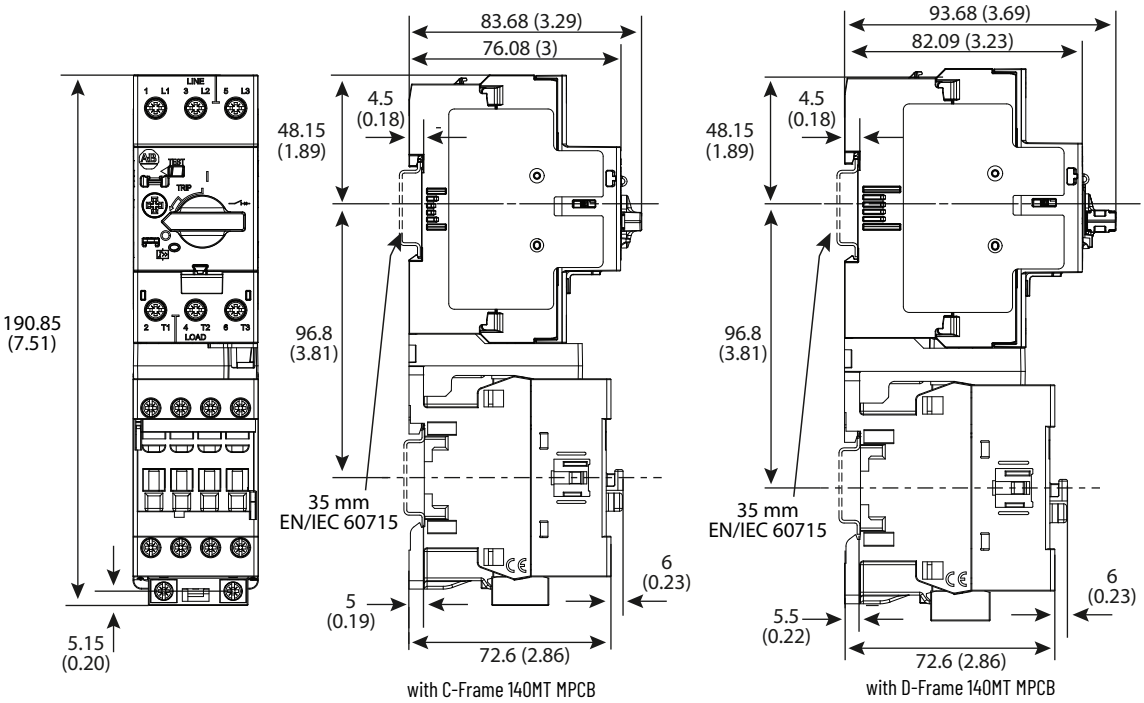

Figure 18 - Non-reversing Starters with 100-E26...E38 Contactors

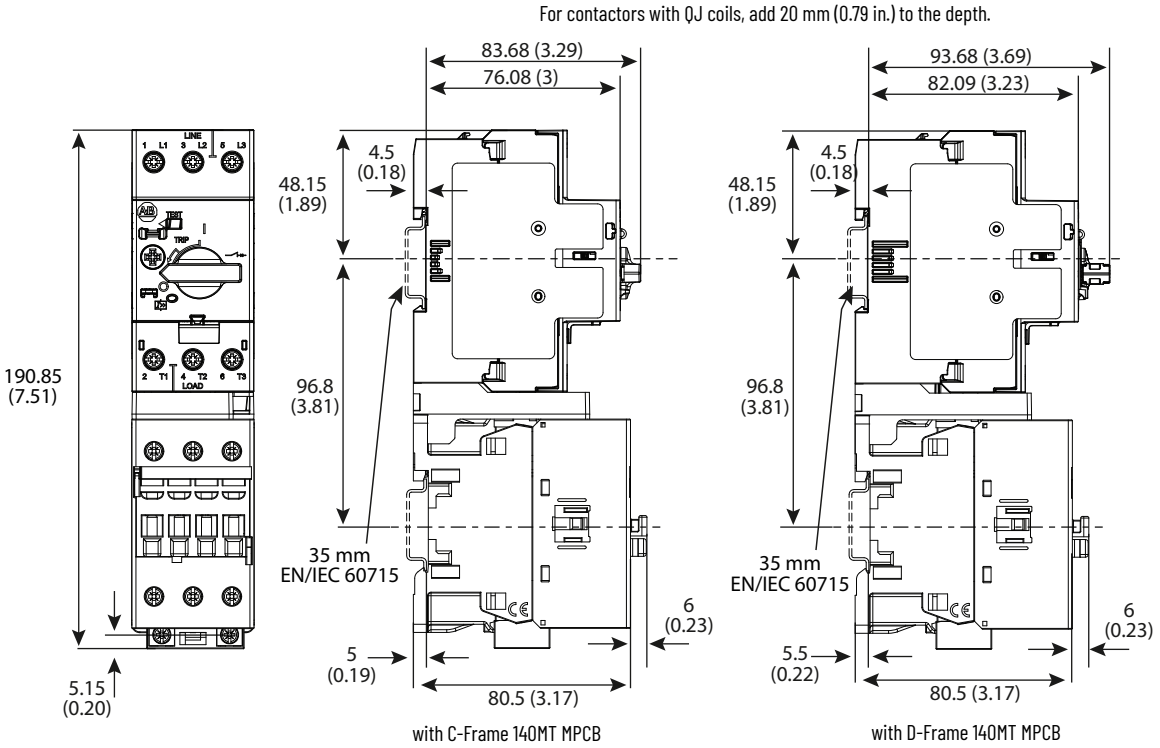

Additional Resources

These documents contain additional information concerning related products from Rockwell Automation.

Resource	Description
IEC Contactor Specifications, publication 100-TD013	Provides product selection and specifications for IEC contactors.
Motor Protection Circuit Breaker and Motor Circuit Protector Specifications, publication 140-TD005	Provides product selection and specifications for Bulletin 140MP/MT motor protection circuit breakers and motor circuit protectors.
IEC Busbar Mounting System Specifications, publication 141-TD001	Provides product selection and specifications for starter busbar mounting systems.
Rockwell Automation Global SCCR Tool, rok.auto/sccr	Provides coordinated high-fault branch circuit solutions for motor starters, soft starters, and component drives.
UL Standards Listing for Industrial Control Products, publication CMPNTS-SR002	Assists original equipment manufacturers (OEMs) with construction of panels, to help ensure that they conform to the requirements of Underwriters Laboratories.
American Standards, Configurations, and Ratings: Introduction to Motor Circuit Design, publication IC-AT001	Provides an overview of American motor circuit design based on methods that are outlined in the NEC.
Industrial Components Preventive Maintenance, Enclosures, and Contact Ratings Specifications, publication IC-TD002	Provides a quick reference tool for Allen-Bradley industrial automation controls and assemblies.
ProposalWorks configuration software, rok.auto/systemtools	Helps configure complete, valid catalog numbers and build complete quotes based on detailed product information.
Safety Guidelines for the Application, Installation, and Maintenance of Solid-state Control, publication SGI-1.1	Designed to harmonize with NEMA Standards Publication No. ICS 1.1-1987 and provides general guidelines for the application, installation, and maintenance of solid-state control in the form of individual devices or packaged assemblies incorporating solid-state components.
Industrial Automation Wiring and Grounding Guidelines, publication 1770-4.1	Provides general guidelines for installing a Rockwell Automation industrial system.
Product Certifications website, rok.auto/certifications.	Provides declarations of conformity, certificates, and other certification details.

You can view or download publications at rok.auto/literature.

Rockwell Automation Support

Use these resources to access support information.

Technical Support Center	Find help with how-to videos, FAQs, chat, user forums, Knowledgebase, and product notification updates.	rok.auto/support
Local Technical Support Phone Numbers	Locate the telephone number for your country.	rok.auto/phonesupport
Technical Documentation Center	Quickly access and download technical specifications, installation instructions, and user manuals.	rok.auto/techdocs
Literature Library	Find installation instructions, manuals, brochures, and technical data publications.	rok.auto/literature
Product Compatibility and Download Center (PCDC)	Download firmware, associated files (such as AOP, EDS, and DTM), and access product release notes.	rok.auto/pcdc

Documentation Feedback

Your comments help us serve your documentation needs better. If you have any suggestions on how to improve our content, complete the form at rok.auto/docfeedback.

Allen-Bradley, expanding human possibility, ProposalWorks, Rockwell Automation, and SMC are trademarks of Rockwell Automation, Inc.
Trademarks not belonging to Rockwell Automation are property of their respective companies.

Rockwell Automation maintains current product environmental compliance information on its website at rok.auto/pec.

Rockwell Otomasyon Ticaret A.Ş. Kar Plaza İş Merkezi E Blok Kat:6 34752, İçerenköy, İstanbul, Tel: +90 (216) 5698400 EEE Yönetmeliğine Uygundur

Connect with us.

rockwellautomation.com — expanding **human possibility**®

AMERICAS: Rockwell Automation, 1201 South Second Street, Milwaukee, WI 53204-2496 USA, Tel: (1) 414.382.2000, Fax: (1) 414.382.4444
EUROPE/MIDDLE EAST/AFRICA: Rockwell Automation NV, Pegasus Park, De Kleetlaan 12a, 1831 Diegem, Belgium, Tel: (32) 2 663 0600, Fax: (32) 2 663 0640
ASIA PACIFIC: Rockwell Automation, Level 14, Core F, Cyberport 3, 100 Cyberport Road, Hong Kong, Tel: (852) 2887 4788, Fax: (852) 2508 1846
UNITED KINGDOM: Rockwell Automation Ltd. Pitfield, Kiln Farm Milton Keynes, MK11 3DR, United Kingdom, Tel: (44)(1908) 838-800, Fax: (44)(1908) 261-917

Publication 190-TD003A-EN-P - October 2022
Supersedes Publication 100-TD015B-EN-P - May 2015

Copyright © 2022 Rockwell Automation, Inc. All rights reserved. Printed in the U.S.A.