Product Information

Original Instructions

GuardShield Micro 400 Safety Light Curtains

Catalog Numbers 445L-C4xFP, 445L-P4xFP, 445L-P4xKD

Summary of Changes

This publication contains the following new or updated information. This list includes substantive updates only and is not intended to reflect all changes.

Topic	Page
Updated Table 4	1

ATTENTION:
- Do not use the GuardShield™ Micro 400 safety light curtain with machines that cannot stop electrically in an emergency.
- Always maintain the safety distance between the GuardShield Micro 400 safety light curtain and a dangerous machine movement.
- Install additional mechanical protective devices so you cannot reach the hazardous machine elements without passing through the protective field.
- Install the GuardShield Micro 400 safety light curtain so you can only access the hazard through the sensing field.
- Improper installation can result in serious injury.
- Never connect the outputs to +24V DC. If the outputs connect to +24V DC, they are in the on-state and cannot stop hazardous spots at the machine/application.
- Never expose the GuardShield Micro 400 safety light curtain to flammable or explosive gases.
- Regular safety inspections are imperative (see Inspection on page 4).

Only use the GuardShield Micro 400 safety light curtain as defined in these instructions and publications that are listed in Additional Resources on page 6. Only qualified personnel can install, commission, service, and use this safety light curtain, and only on the machine that the device was intended.

If the device is used for any other purposes or modified in any way, warranty claims against Allen-Bradley/Guardmaster become null and void.

IMPORTANT Observe the following items to maintain the proper and safe use of the GuardShield Micro 400 safety light curtain.

The national/international rules and regulations apply to the installation, use, and periodic technical inspections of the safety light curtain, in particular:

- Machinery Directive 2006/42/EC
- Low Voltage Directive 2014/35/EU
- Use of Work Directive 2009/104/EC
- The work safety regulations/safety rules
- Other relevant health and safety regulations

Manufacturers and users of the machine that uses the safety light curtain are responsible for obtaining and observing all applicable safety regulations and rules.

Specifications

Table 1 - Safety Ratings

Attribute	Standard	IP69K
Standards	IEC/EN 61496 Parts 1 and 2, UL61496 Parts 1 and 2, UL1998	
Safety classification	Type 4 per IEC/EN61496. Category 4 device per EN 13849-1 SIL 3 per IEC 61508, PLe per EN/ISO 13849-1	
Probability of a dangerous failure per hour PFH	• 6.0 E-9 1/h MSR42 or MSR41 safety module, and MSR45E extension module • 4.0 E-9 1/h Micro 400 safety light curtain	
Certifications	cULus Listed, TÜV Certified, CE Marked for all applicable EU directives, UKCA Marked for all applicable regulations, and RCM Marked (Australia) rok.auto/certifications	

Table 2 - Outputs

Attribute	Standard	IP69K
Micro 400 safety light curtain outputs	Data output to controller (MSR41 or MSR42 safety module)	
MSR41/MSR42 safety module outputs	Two 400 mA OSSD	
Non-safety outputs	Auxiliary outputs from MSR41 or MSR42 safety module 2 configurable 100 mA, outputs	
Switching current at voltage, max	400 mA at 24V DC	

Table 3 - Operating Characteristics

Attribute	Standard	IP69K
Response time	• 14 mm (0.55 in.): 12...42 ms, varies by protective height and resolution, protective height 150...1200 mm (5.95...47.24 in.) • 30 mm (1.18 in.); 11...23 ms, varies by protective height and resolution, protective height 150...1200 mm (5.95...47.24 in.)	
Status indicators	On-state, Off-state, Intensity, Lockout	
Protected height [mm (in.)]	• Standard slim profile: 50...1200 (1.97...47.2) in 50 (1.97) increments • Reinforced profile: Up to 2200 (86.6)	
Resolution [mm (in.)]	14 (0.55), 30 (1.18), or PAC (perimeter)	
Scanning range/ resolution, min	• 14 mm (0.55 in.) resolution: 0...5 m (16.4 ft) • 30 mm (1.18 in.) resolution: 0...5 m (16.4 ft)	• 14 mm (0.55 in.) resolution: 0...2.5 m (0...8.2 ft) • 30 mm (1.18 in.) resolution: 0...2.5 m (0...8.2 ft)
Synchronization	Electrical through MSR41 or MSR42 safety module	
Wave length	940 nm	
Time for self-check when switching on U_{sp}	< 5 s	

Table 4 - Environmental

Attribute	Standard	IP69K
Enclosure type rating	• Micro 400 safety light curtain: IP54 • Plug: IP65	• Micro 400 safety light curtain: IP65, IP66, IP67, IP68, IP69K
Relative humidity	15...95% (noncondensing)	
Operating temperature [°C (°F)]	0...55 (14...131)	
Storage temperature [°C (°F)]	-20...+70 (4...158)	

Table 4 - Environmental (Continued)

Attribute	Standard	IP69K
Vibration (1)	Per IEC 61496-1 Edition 4 (Class 3M7), IEC 60068-2-29, frequency 10...150 Hz; amplitude 10 mm (0.39 in.), acceleration 3 g	
Shock (1)	Per IEC 61496-1 Edition 4 (Class 3M7), IEC 60068-2-27, acceleration 25 g, duration 6 ms	
Power supply	Input power from MSR41 or MSR42 safety module	
Input power, max	24V DC ±15% (MSR41 or MSR42 safety module)	
Residual ripple, max	5% of Vss	
Power consumption, max (no load)	0.07 A	
Equipment class	III (VDE 0106 part 100)	
EMC	IEC 61496 part 1	

(1) MSR41/42/45E tested to Class 3M4

Table 5 - Physical Characteristics

Attribute	Standard	IP69K
Number of beams, max	255	
Standard mounting	180° adjustable mounting brackets supplied (two sets 445L-AF6143)	
Weight	Varies by protective height	
Housing cross section [mm (in.)]	• Slim profile (standard): 15 x 20 (0.59 x 0.79) • Reinforced profile (special): 30 x 40 (1.18 x 1.57)	
Material	• Optical window: Polycarbonate • Enclosure: Aluminum, polyester powder coated, silicon free	
Connection type	Transmitter/receiver: 8-pin M12 micro QD	
Cable length	1 m, 2 m, 3 m, 5 m, and 8 m (3.3 ft, 6.6 ft, 9.8 ft, 16.4 ft, and 26.2 ft) cable M12 to RJ45 for MSR41 or MSR42 safety module. The maximum total system length cannot exceed 10 m (32.8 ft).	
Patchcords (1)	1 m, 3 m, and 5 m (3.3 ft, 9.8 ft, and 16.4 ft) M12 to M12 patchcords. Total system length cannot exceed 10 m (32.8 ft) including protective height of Micro 400 safety light curtain, integrated cables, and patchcords from M12 connector to MSR41 or MSR42 safety module.	

(1) Special patchcords are necessary to replace older safety light curtain connector versions.

Status Indicators

A red and a green status indicator are integrated in the end-cap connection module of each profile (near the cable), which clearly signals the status of the protective field. The status indicator display indicates system conditions and faults of the GuardShield Micro 400 safety light curtain systems.

Figure 1 - Status Indicators

Table 6 - Status Indicator Meanings

Status Indicator	Color	Meaning
Green	On	Protective field is free
	Flashing	Intensity is inadequate
Red	Off	Protective field is free
	On	Protective field is interrupted
	Flashing	Error (lock out condition)

See publications 440R-UM006 and 440R-UM008 for the conditions that the status indicators signal from the status outputs of the connected MSR41 or MSR42 safety module.

Installation

Select a rigid and flat base that is isolated against shock and vibration to mount the GuardShield Micro 400 safety light curtain.

IMPORTANT Install the GuardShield Micro 400 safety light curtain so access to the hazard is only possible through the sensing field of the GuardShield (see Figure 2). Installation of the GuardShield Micro 400 safety light curtain can require auxiliary safeguarding to meet this requirement.

Determine if the machinery on which the GuardShield Micro 400 safety light curtain is to be mounted meets the requirements in Specifications on page 1. For example, machinery must be able to stop anywhere in its stroke or cycle, consistently and repeatedly.

Figure 2 - Correct Installation

You cannot reach hazardous machine parts without passing through the protective field.

You cannot step between the protective field and hazardous machine parts (bypass prevention).

Figure 3 - Incorrect Installation

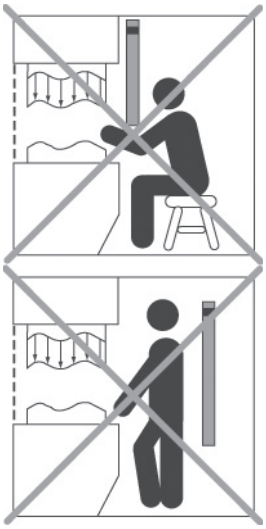

You can reach hazardous machine parts without passing through the protective field.

You can step between the protective field and hazardous machine parts.

The GuardShield Micro 400 safety light curtain must mount at the proper safety distance. See publication 445L-IN005 to calculate this distance.

Alignment

Mount the transmitter and receiver with the brackets (see Figure 5 on page 3). Confirm that the longitudinal axes of both orient parallel to each other. Use a vertical or horizontal mounting level to find the correct position.

Confirm that the receiver and transmitter orient in the same direction; both connection ends must be at the same end of the protective field and the status indicators are opposite one another. Do not mount the GuardShield Micro 400 safety light curtain systems that are rotated at 180° (see Figure 4 on page 3).

Connect the transmitter and receiver to the controller and power up. Align according to Multiple Safety Light Curtains. The status indicators aid in alignment.

After you align the longitudinal axis of the transmitter and receiver, rotate the receiver along the longitudinal axis to find the receiving angle. During rotation, the green status indicator shows a free protective field. If the green status indicator flashes, the amount of light is not sufficient for stable operation. After you realign the safety light curtain, briefly interrupt the protective field. After you remove the object from the protective field, the green status indicator shows a sufficient intensity level.

Adjust and mount the receiver at the center of this operating angle.

After you align the receiver, rotate the transmitter to find the transmitting angle. During rotation, the green status indicator shows the transmitting angle of the GuardShield Micro 400 safety light curtain.

Adjust and mount the transmitter at the center of this operating angle.

Use a test rod to test the protective function of the GuardShield Micro 400 safety light curtain, according to Figure 6 on page 5. The insertion of this rod into the protective field at any position must interrupt the protective field (the red status indicator on the GuardShield Micro 400 illuminates).

Cycle power to confirm that the system powers up and goes to the on state.

Figure 4 - Layout of the Transmitter/Receiver

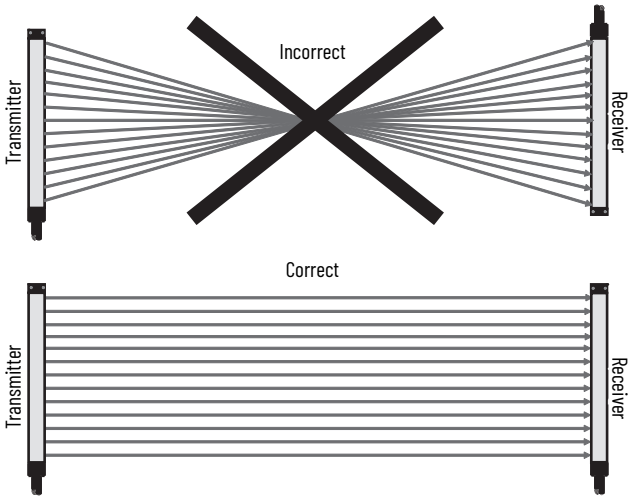

Multiple Safety Light Curtains

When two or more GuardShield Micro 400 safety light curtains mount close to one another, the receiver of one GuardShield Micro 400 safety light curtain pair can receive infrared light from the transmitter of another pair.

To help prevent or reduce the possibility of optical interference from safety light curtains that mount in the same plane, alternate the transmitter and receiver pairs so that the receiver from a second pair is facing away from the transmitter of another safety light curtain pair nearby. You can place a physical barrier between pairs to help prevent the infrared light from reaching another safety light curtain pair.

Figure 5 - Alignment Options

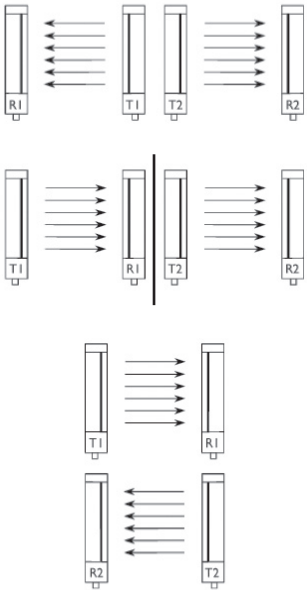

Transmitters emit in opposite directions. Each receiver receives only the beams of the appropriate transmitter.

Transmitters emit in the same direction: An optical (physical) barrier is necessary.

Positioning of the safety light curtain: Transmitters emit in opposite directions.

Cascading Systems

IMPORTANT	In a cascading system, only the status indicators of the segment closest to the controller function. Status indicators of other segments do not function.

Align the cascading segments in a particular order:

1. Connect the last segment (the segment with one connector) closest to the control unit.
2. Once the status indicator on the edge is green, secure the mounting brackets of that pair.
3. Connect the middle segment to the last segment and connect to the controller.
4. When the status indicator of the middle segment receiver is green, secure those brackets.
5. Connect the closest segment to the other segments and connect all together to the controller.

Only the diagnosis status indicator of the first segment displays the protective field status. The status indicators of other segments stay off.

The optical interface module (see publication 445L-IN005) can aid in the alignment of a cascaded system.

Micro 400 Safety Light Curtain IP69K

The Micro 400 safety light curtain IP69K is supplied with two mounting brackets that attach to the connection and end module of the tube. Do not rotate the end or connection cap (danger of bending the safety light curtain).

The connection plug must mount away from high-pressure water.

IMPORTANT	• Do not rotate the end or connection cap as there is a danger of bending the safety light curtain. • Do not mount brackets on the transparent tube. Excessive force can damage the tube.

Mounting Brackets

The GuardShield Micro 400 safety light curtain mounts using brackets, which attach to the side of both transmitter and receiver. Use additional brackets, if necessary, to mount the GuardShield Micro 400 safety light curtain at a proper safety distance from the machinery hazard. The backside of the safety light curtain profile has continuous grooves to fix the mounting brackets at any position along the safety light curtain housing.

Additional brackets are available to mount on the side or in the center. See publication 445L-IN005.

Wiring

Connect a GuardShield Micro 400 safety light curtain to a machine controller with an MSR41 or MSR42 series safety module. Only use a prefabricated cable (catalog number 445L-AC8*xxx*) provided by Rockwell Automation between the safety light curtain and the controller (see publication 445L-IN005).

The Micro 400 safety light curtain requires two patchcords, one for the transmitter and one for the receiver. Use the M12 8-pin connector to connect the safety light curtain, while the RJ45 connector plugs to the controller. Use the M12 to M12 patchcords to extend the cable, especially between cascades of the Micro 400 safety light curtain.

The connection cables are offered with color-coded rings that attach to each cable. Remove one color ring from the cable as necessary.

- White – Transmitter (Tx)
- Blue – Receiver (Rx)

Power supply, inputs, safety outputs, and status outputs connect to the terminal block of the MSR41, MSR42 safety module, or a MSR45E extension module (see publication 445L-IN005).

The interface of the safety light curtain with the machine control must be control reliable. For example, a correct interface with a safety PLC or safety relays with positive guided relay contacts.

IMPORTANT	The safety devices and the interconnection to the machinery must comply with the basic safety requirements as mentioned in the current regulations and standards. Direct interface of a safety light curtain to a machine control that does not meet the necessary safety integrity level, can result in injury to personnel. For instance, the use of general-purpose PLCs or relays can cause injury to personnel.

For circuit diagrams, see publication 445L-IN005.

Initiate the Unit

The transmitter and receiver units must connect to an MSR41 or MSR42 safety module. Then the supply voltage can connect to the control unit. After power-up, there is an automatic self-test (duration < 5 s) of all system components.

If the protective field is free and the transmitter and receiver correctly align, the green status indicators on the GuardShield Micro 400 safety light curtains illuminate.

If after a successful power-up the safety light curtain detects an interruption of the protection field, the red status indicators on the GuardShield Micro 400 safety light curtains illuminate.

Confirm the following before the initiation or a changed machine setting (for example, a rewiring) of the GuardShield Micro 400 safety light curtain.

1. The power supply is a 24V DC device that must comply with all applicable standards of the Machinery Directive 2006/42/EC, and the product standard (IEC61496), for example the 1606-XLP series. No connection to a conventional power supply.
2. Proper polarity of the power supply at the controller of the GuardShield Micro 400 safety light curtain.
3. The transmitter connection cable properly connects to the transmitter, the receiver connection cable properly connects to the receiver. All plugs are connected.
4. The OSSD outputs do not connect to +24V DC.
5. The connected switching elements (load) do not connect to 24V DC.
6. If two or more GuardShield Micro 400 safety light curtains are in use, confirm that each system is properly installed to avoid optical interference.

Switch on the GuardShield Micro 400 safety light curtain. The system is functional if the protection field is free of obstructions and after 2 seconds after startup, the system starts to work properly.

Troubleshooting

- Steady red status indicator:
  - Check the alignment of the status indicator of the GuardShield Micro 400 safety light curtain. Use the 445L-AF6150 optical interface to display the individual beam status on a laptop with a USB interface.
- Red status indicator flashes (lockout condition):
  - Inadequate supply voltage to the MSR41 or MSR42 safety module.
  - Transmitter and/or receiver cables do not correctly plug into the MSR41 or MSR42 safety module.
  - Transmitter and receiver safety light curtains connect to the incorrect locations in the controller (transmitter plugged into receiver connection).
  - Incorrect assembly of cascaded systems (transmitter and receiver mixed).
  - Cable connector makes poor contact.
  - Error in the EDM feedback channel at the safety control (only if EDM).
  - Short circuit at the OSSD outputs.
  - A foreign light source affects the receiving unit.
  - Blanking configured and wrong safety light curtain length or resolution connected (only if blanking).

To correct:

- Examine connections, cables, and plugs of transmitter and receiver.
- Turn the supply voltage off and on again.
- Use the optical interface to display the lockout information on a laptop with a USB interface.
- If the status indicator of the safety light curtain still flashes red, contact Rockwell Automation technical support.

IMPORTANT	In cascaded systems, only the status indicator in the first safety light curtain illuminates (closest to the safety controller).

Inspection

ATTENTION: Never operate the GuardShield Micro 400 safety light curtain before you conduct the following inspection. Improper inspection can lead to operator injury.

Specialist personnel or specially qualified and authorized personnel must conduct, record, and document the tests so the tests can be reconstructed and retraced at any time.

Only conduct an inspection if you clearly understand the functioning of the GuardShield Micro 400 safety light curtain, and of the machine, and you have sufficient information available to conduct the inspection.

For the inspection, confirm:

- Approach to hazardous machine parts must only be possible through the protective field of the GuardShield Micro 400 safety light curtain.
- Operators cannot step through the sensing area while working on dangerous machine parts.
- The safety distance of the application is bigger than the calculated value.
- The optic front cover is not scratched or dirty.

Operate the machine and check if the hazardous movement stops under the following circumstances.

- The protective field is interrupted.
- Hazardous machine movement stops immediately when the test interrupts the protective field:
  - Directly in front of the transmitter
  - Directly in front of the receiver
  - In the middle between transmitter and receiver
- No hazardous machine movement while the test rod is anywhere within the protective field.
- If the blanking function is active, check all sections of the protective field with the appropriate test piece.

IMPORTANT If any of the previously listed conditions do not stop the hazardous motion of the machine, do not allow the machine to operate.

Figure 6 - Test the Protective Field with a Test Rod

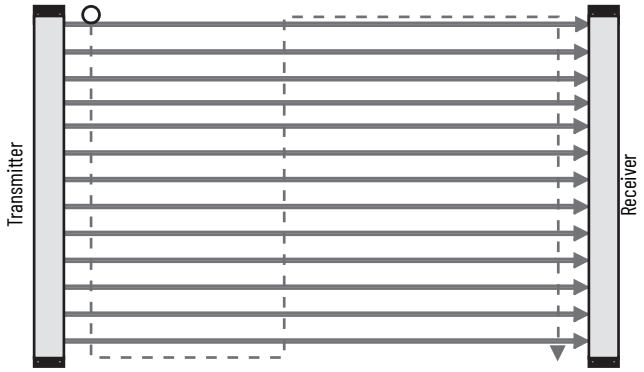

For the detailed inspection, confirm:

- The machine stops or does not obstruct any safety function.
- The latest machine or connection modifications have no effect on the control system.
- The outputs of the controller of the GuardShield Micro 400 safety light curtain properly connect to the machine.
- The total response time of the machine is shorter than the calculated value.
- Cables and plugs of the GuardShield Micro 400 safety light curtain are in good condition.
- Mounting brackets, caps and cables are properly secured.

Approximate Dimensions

Figure 7 - RJ45 Plug/M12 8-pin Socket (Shielded Cable) [mm (in.)] (a)

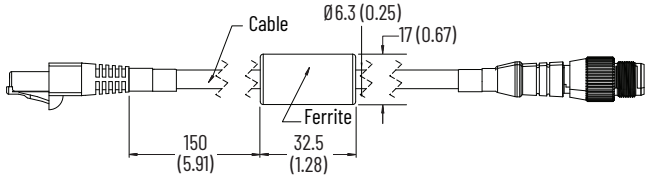

Figure 8 - M12 Plug/M12 8-pin Socket (Shielded Cable) Extension Patchcord [mm (in.)] (b)

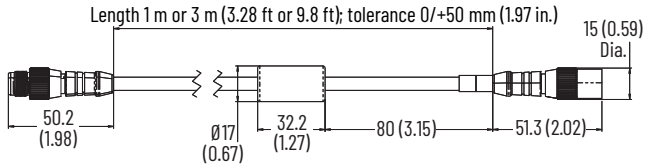

(a) Use to connect from the MSR41 or MSR42 safety module to the safety light curtain
(b) Extension connection cable or use between safety light curtain cascades.

Figure 9 - GuardShield Micro 400 Safety Light Curtain, Standard, [mm (in.)]

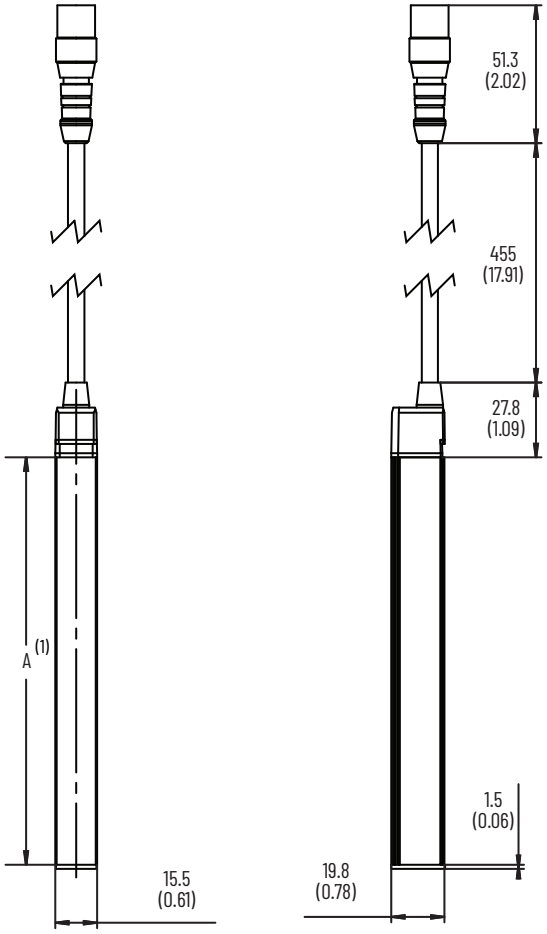

(1) See publication 445L-IN005 for protection height.

Figure 10 - GuardShield Micro 400 Safety Light Curtain IP69K [mm (in.)]

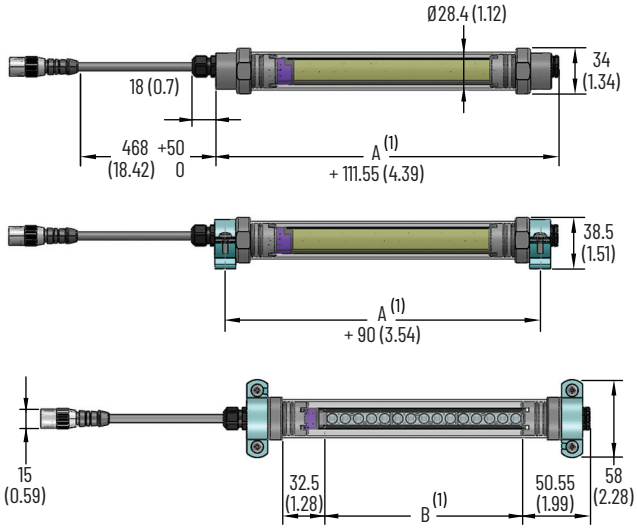

(1) See publication 445L-IN005 for protection height.

Figure 11 - GuardShield Micro 400 Safety Light Curtain, Cascaded [mm (in.)]

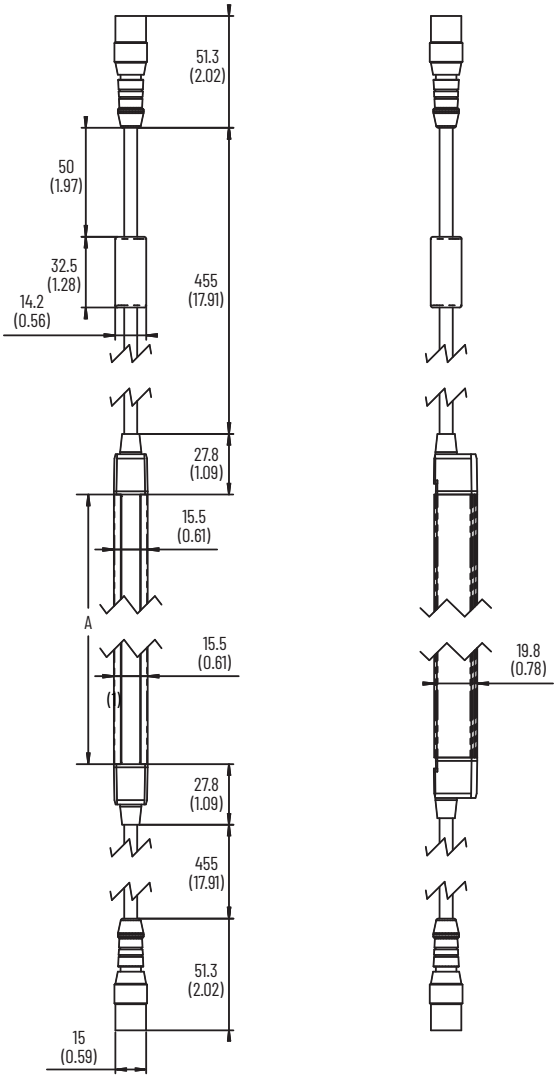

(1) See publication 445L-IN005 for protection height.

Declaration of Conformity

CE Conformity

Rockwell Automation declares that the products that are shown in this document conform with the 2014/30/EU Electromagnetic Compatibility Directive (EMC) and 2006/42/EC Machinery Directive (MD) and that the respective standards and/or technical specifications have been applied.

For a comprehensive CE certificate visit: rok.auto/certifications.

UKCA Conformity

Rockwell Automation declares that the products that are shown in this document are in compliance with 2016 No. 1091 Electromagnetic Compatibility Regulations and 2008 No. 1597 Supply of Machinery (Safety) Regulations and that the respective standards and/or technical specifications have been applied.

For a comprehensive UKCA certificate visit: rok.auto/certifications.

Additional Resources

Resource	Description
MSR41 Safety Module User Manual, publication 440R-UM006	Provides installation and operation information for the Guardmaster® MSR41 safety module.
MSR42 Safety Module User Manual, publication 440R-UM008	Provides installation and operation information for the Guardmaster MSR42 safety module.
GuardShield Micro 400 Safety Light Curtains Installation Instructions, publication 445L-IN005	Provides operation and installation instructions for GuardShield Micro 400 safety light curtain POC and PAC, PAC IP69K systems, and special configurations.
Product Certifications website, rok.auto/certifications	Provides declarations of conformity, certificates, and other certification details.

You can view or download publications at rok.auto/literature.

Waste Electrical and Electronic Equipment (WEEE)

At the end of life, this equipment should be collected separately from any unsorted municipal waste.

Rockwell Automation maintains current product environmental compliance information on its website at rok.auto/pec.

Your comments help us serve your documentation needs better. If you have any suggestions on how to improve our content, complete the form at rok.auto/docfeedback.
For technical support, visit rok.auto/support.

Rockwell Otomasyon Ticaret A.Ş. Kar Plaza İş Merkezi E Blok Kat:6 34752, İçerenköy, İstanbul, Tel: +90 (216) 5698400 EEE Yönetmeliğine Uygundur

Connect with us.

rockwellautomation.com — expanding **human possibility**®

AMERICAS: Rockwell Automation, 1201 South Second Street, Milwaukee, WI 53204-2496 USA, Tel: (1) 414.382.2000, Fax: (1) 414.382.4444
EUROPE/MIDDLE EAST/AFRICA: Rockwell Automation NV, Pegasus Park, De Kleetlaan 12a, 1831 Diegem, Belgium, Tel: (32) 2663 0600, Fax: (32) 2 663 0640
ASIA PACIFIC: Rockwell Automation SEA Pte Ltd, 2 Corporation Road, #04-05, Main Lobby, Corporation Place, Singapore 618494, Tel: (65) 6510 6608, FAX: (65) 6510 6699
UNITED KINGDOM: Rockwell Automation Ltd., Pitfield, Kiln Farm, Milton Keynes, MK11 3DR, United Kingdom, Tel: (44)(1908) 838-800, Fax: (44)(1908) 261-917

PN-107934

Publication 445L-PC001B-EN-P - January 2024 | Supersedes Publication 445L-PC001A-EN-P - May 2023

PN-107934
10000167493 Ver 07