PowerFlex® 700S and 700H Frames 10…12 Rectifier Module Replacement Kit

Installation Instructions

Allen-Bradley

ATTENTION: To avoid an electric shock hazard, ensure that all power to the drive has been removed before performing the following.

ATTENTION: To avoid an electric shock hazard, verify that the voltage on the bus capacitors has discharged completely before servicing. Check the DC bus voltage at the Power Terminal Block by measuring between the +DC and -DC terminals, between the +DC terminal and the chassis, and between the -DC terminal and the chassis. The voltage must be zero for all three measurements.

ATTENTION: HOT surfaces can cause severe burns. **Do not** touch the heatsink surface during operation of the drive. After disconnecting power allow time for cooling.

ATTENTION: Hazard of permanent eye damage exists when using optical transmission equipment. This product emits intense light and invisible radiation. Do not look into SynchLink fiber-optic ports or SynchLink fiber-optic cable connectors.

ATTENTION: This drive contains **ESD** (Electrostatic Discharge) sensitive parts and assemblies. Static control precautions are required when installing, testing, servicing or repairing this assembly. Component damage may result if ESD control procedures are not followed. If you are not familiar with static control procedures, reference A-B publication 8000-4.5.2, “Guarding Against Electrostatic Damage” or any other applicable ESD protection handbook.

ATTENTION: The sheet metal cover and mounting screws on the ASIC Board located on the power structure are energized at (-) DC bus potential high voltage. Risk of electrical shock, injury, or death exists if someone comes into contact with the assembly.

What This Kit Includes

- Rectifier module
- Rectifier DC+ bus bar (2)
- Bus bar insulator sheet
- Rectifier insulator sheet

Do not begin the installation before reading Important Parts Information on page 2.

Allen-Bradley • Rockwell Software

Rockwell Automation

Publication PFLEX-IN023A-EN-P

Important Parts Information

Important: Due to a change in the SCR modules used in the rectifier module provided in this kit, the rectifier module DC+ bus bars and insulator material provided in this kit must be used. Therefore, the existing rectifier module DC+ bus bar and insulator material must not be reused when installing this rectifier module kit. See details below.

Rectifier Modules

Rectifier module with round terminals

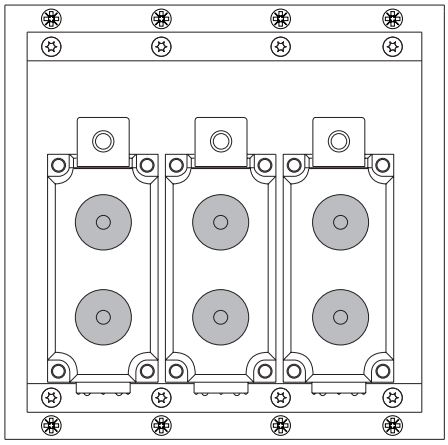

Rectifier module with rectangular terminals provided in this kit

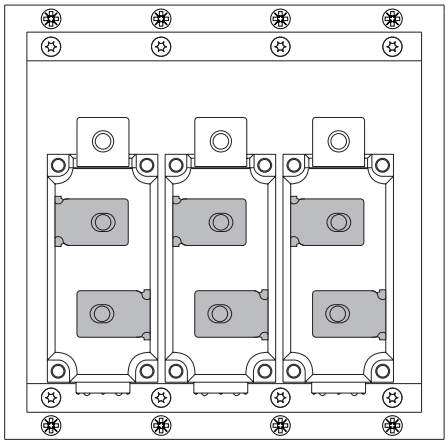

Rectifier Module DC+ Bus Bars

Frame 10 and 12 rectifier DC+ bus bar

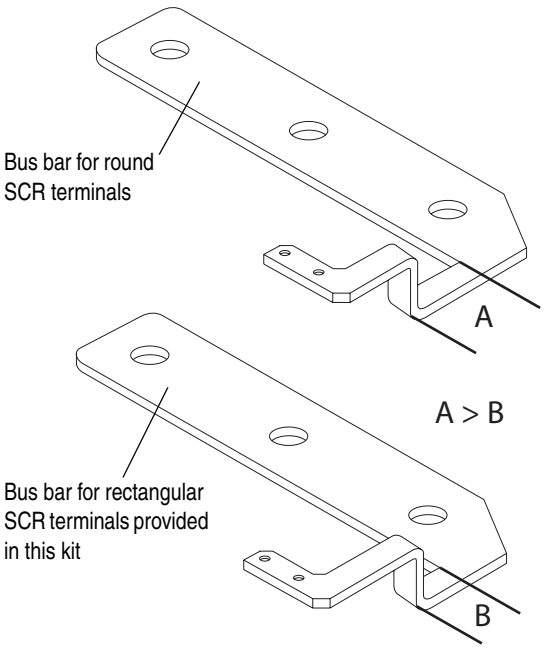

Frame 11 rectifier DC+ bus bar

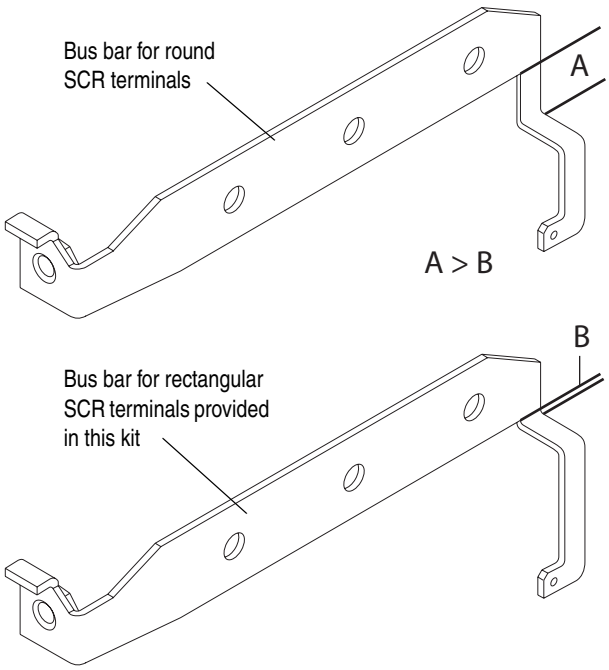

Bus Bar and Rectifier Module Insulator Material

The insulator sheet that is placed between the main DC- and DC+ bus bars for rectifier modules with round SCR terminals is one piece. The insulator material provided with this kit is two pieces, one sheet for between the main DC- and DC+ bus bars and one to cover the rectifier module.

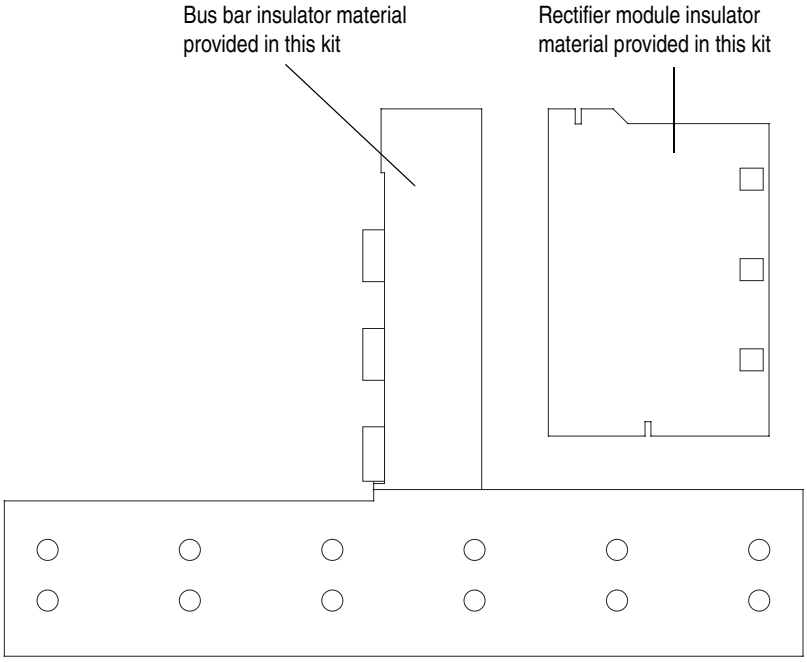

Tools That You Need

- POZIDRIV screwdriver
- Hexalobular screwdriver
- Socket wrenches and extensions
- Torque wrench
- Wire cutter
- PowerFlex 700H and 700S maintenance stand for Rittal TS8 enclosures only (catalog string: 20-MAINSTD) (recommended)
- Lifting equipment capable of securing, holding and lifting the 210 kg (463 lb) frame 11 power structure
- Multi-meter - Digital multi meter, capable of ac and dc voltage, continuity, resistance, capacitance measurements, and forward diode bias tests

POZIDRIV® is a registered trademark of Phillips Screw Company.

Understanding Torque Figures in Illustrations

Icons and numbers in the assembly illustrations indicate how to tighten hardware after re-assembly:

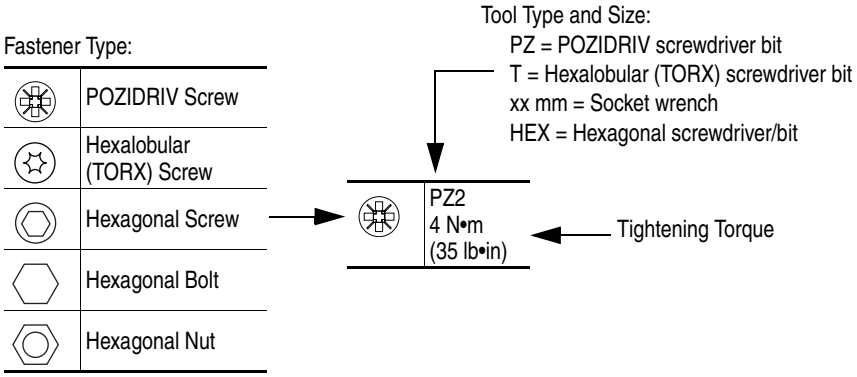

ATTENTION: A hazard of personal injury and/or equipment damage exists if the hardware securing power components in the drive is not installed in the same location from which it was removed, according to size, and the specified torque is not applied, where indicated. Take the appropriate steps to ensure that the location and size of hardware has been noted during disassembly and that proper torque is applied as indicated during re-assembly.

What You Need to Do

- ❒ Step 1: Remove power from the drive
- ❒ Step 2: Remove the protective covers from the drive
- ❒ Step 3: Remove the power structure from the enclosure
- ❒ Step 4: Remove the existing rectifier module
- ❒ Step 5: Install the new rectifier module
- ❒ Step 6: Install the power structure in the enclosure
- ❒ Step 7: Complete the circuit tests
- ❒ Step 8: Install the protective covers
- ❒ Step 9: Document the change

Step 1: Remove Power from the Drive

ATTENTION: To avoid an electric shock hazard, verify that the voltage on the bus capacitors has discharged completely before servicing. Check the DC bus voltage at the Power Terminal Block by measuring between the +DC and -DC terminals, between the +DC terminal and the chassis, and between the -DC terminal and the chassis. The voltage must be zero for all three measurements.

Remove power before making or breaking cable connections. When you remove or insert a cable connector with power applied, an electrical arc may occur. An electrical arc can cause personal injury or property damage by:

- sending an erroneous signal to your system's field devices, causing unintended machine motion
- causing an explosion in a hazardous environment

Electrical arcing causes excessive wear to contacts on both the module and its mating connector. Worn contacts may create electrical resistance.

1. Turn off and lock out input power. Wait five minutes.
2. Verify that there is no voltage at the drive's input power terminals.
3. Check the DC bus voltage at the Power Terminal Block by measuring between the +DC and -DC terminals, between the +DC terminal and the chassis, and between the -DC terminal and the chassis. The voltage must be zero for all three measurements.

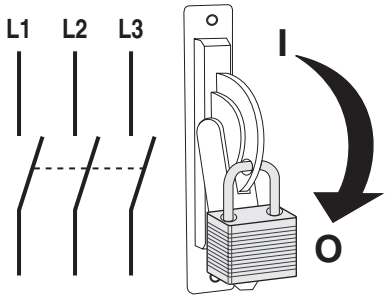

Step 2: Remove the Protective Covers from the Drive

To remove the protective covers, you must first move the control frame and then remove the air flow plate.

1. Loosen the T8 hexalobular screws that hold the control frame to the drive enclosure (remove screws on early frame 10 drives).
2. Swing the control frame out and away from the power structure.

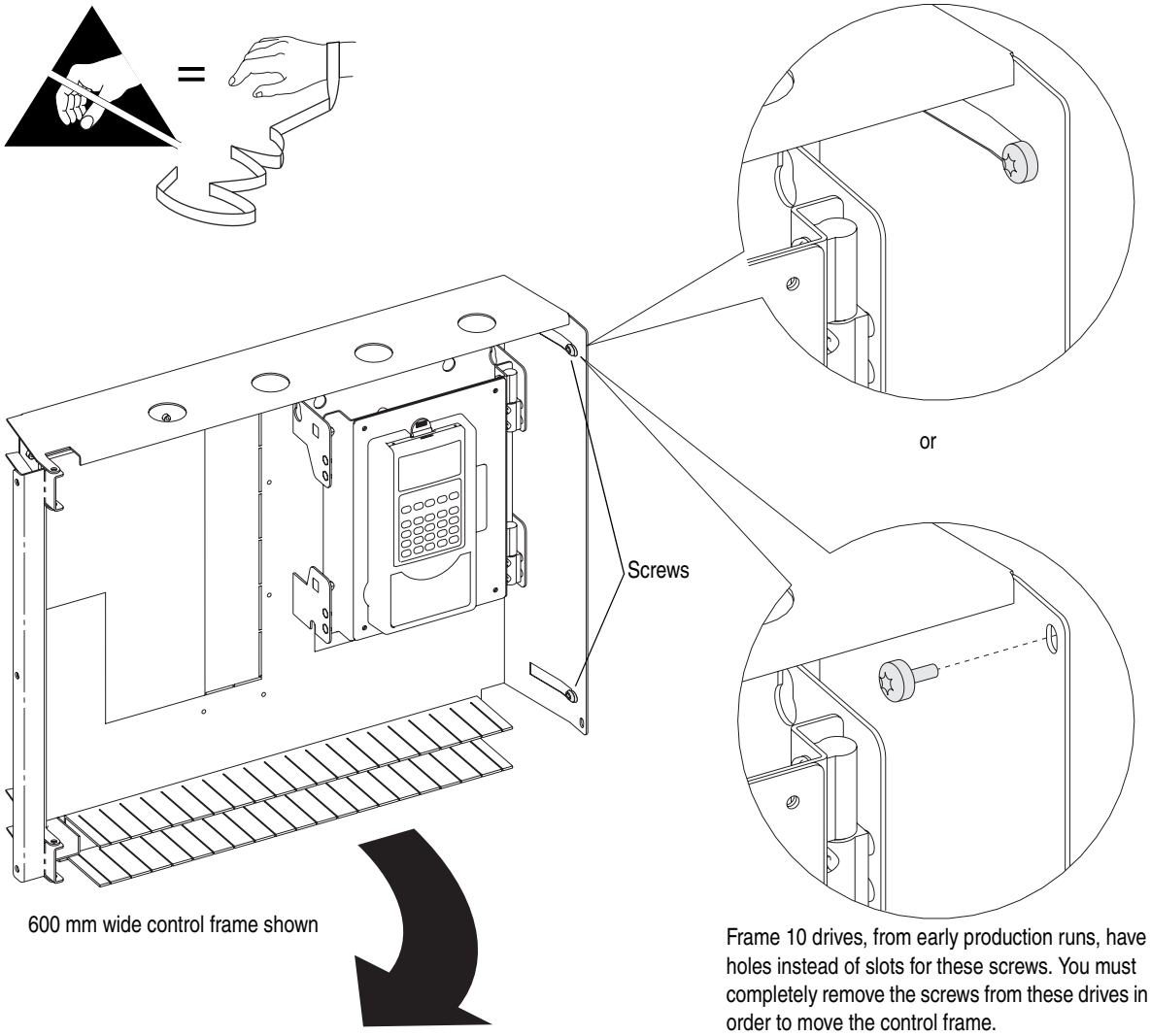

3. Remove the four T8 hexalobular screws that secure the airflow plate to the drive and slide the airflow plate off the enclosure frame.

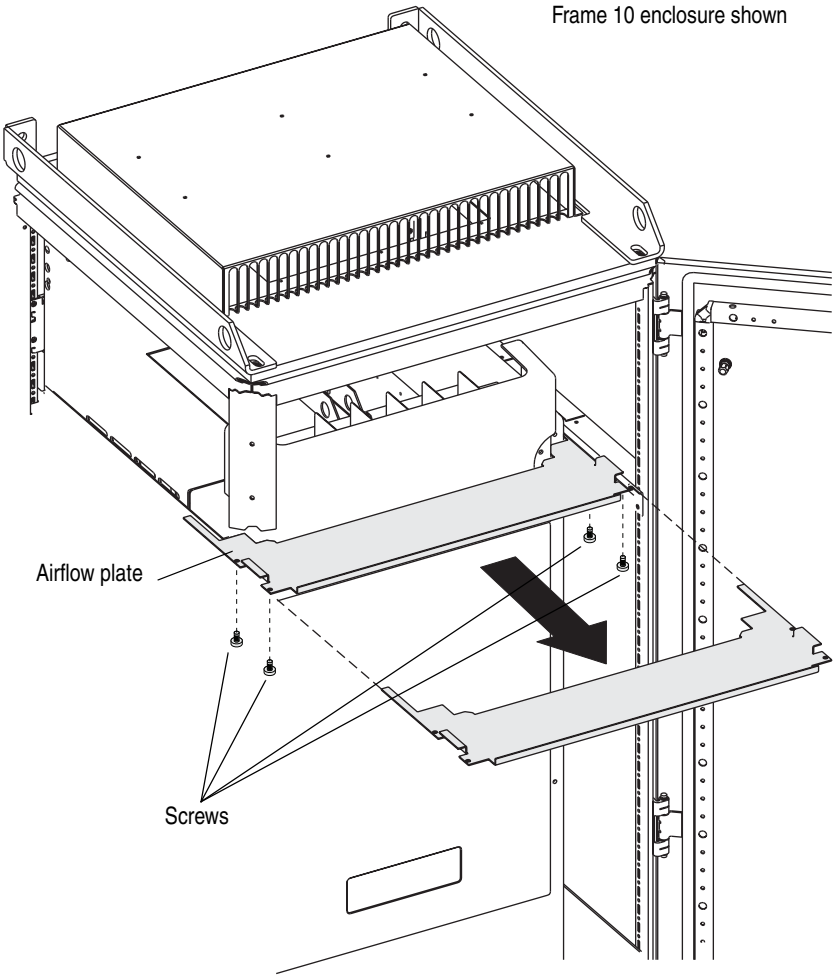

4. Remove the four M5 POZIDRIV screws that secure the top and bottom protective covers to the main front protective cover and remove the top and bottom protective covers.
5. Remove the four M5 POZIDRIV screws that secure the main front protective cover to the drive and remove the protective cover.
6. On frame 10 and 12 drives only, remove the side protective covers.

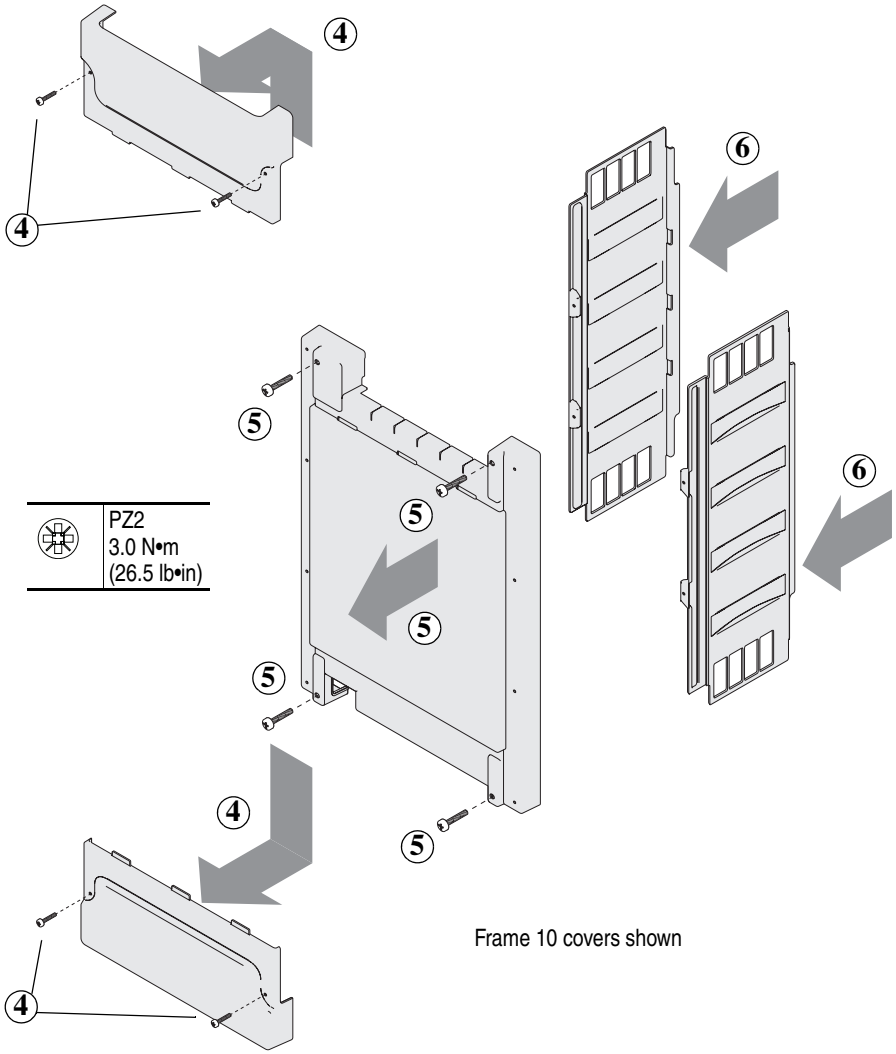

Frame 10 covers shown

Step 3: Remove the Power Structure from the Enclosure

In order to remove the power structure from the enclosure you must first remove the power and ground wiring.

For terminal locations, refer to Figure 1 below for frame 10 and 12 drives and Figure 2 on page 10 for frame 11 drives.

1. Remove the insulator material from between the input terminals.
2. Remove the input wiring from the following terminals:
   - Frames 10 and 12 - L1, L2, L3 and DC-, DC+ (if present) on the power structure
   - Frame 11 - 1L1, 1L2, 1L3 and 2L1, 2L2, 2L3 (except 690V AC input 460A and 502A drives, 1L1, 1L2, 1L3 only) and DC-, DC+ (if present) on the power structure
3. Remove the motor wiring from terminals U/T1, V/T2, W/T3 on the power structure.
4. Remove the ground connection from the power structure.

Figure 1 Frame 10 and 12 Drives

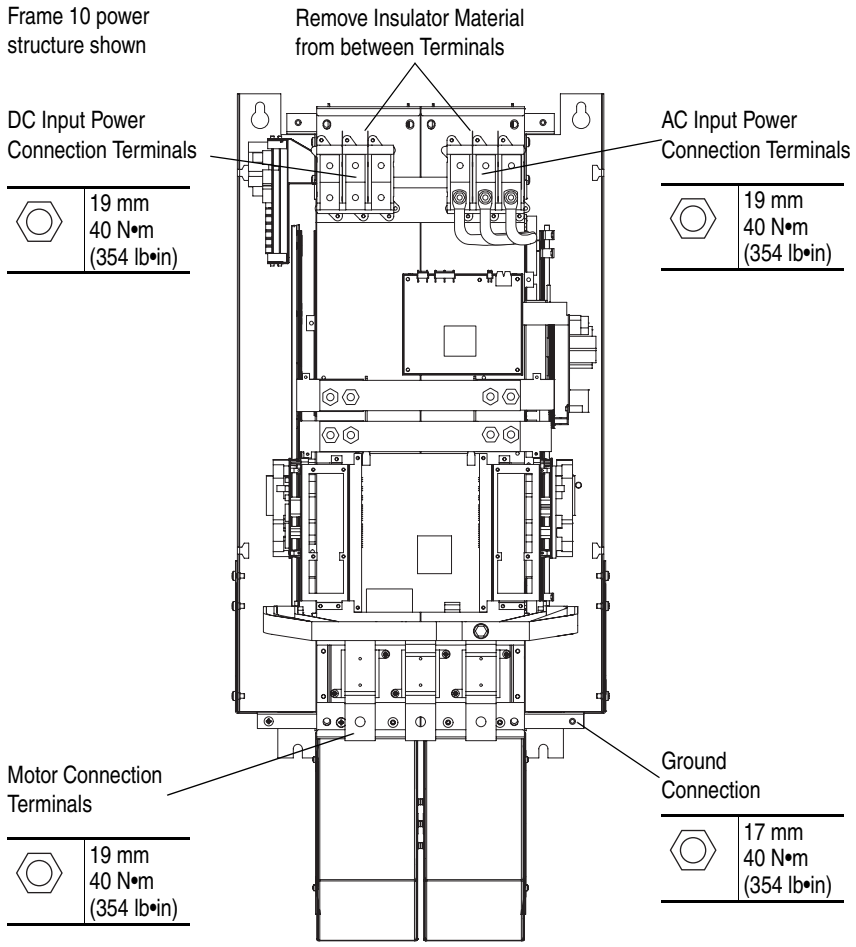

Figure 2 Frame 11 Drives

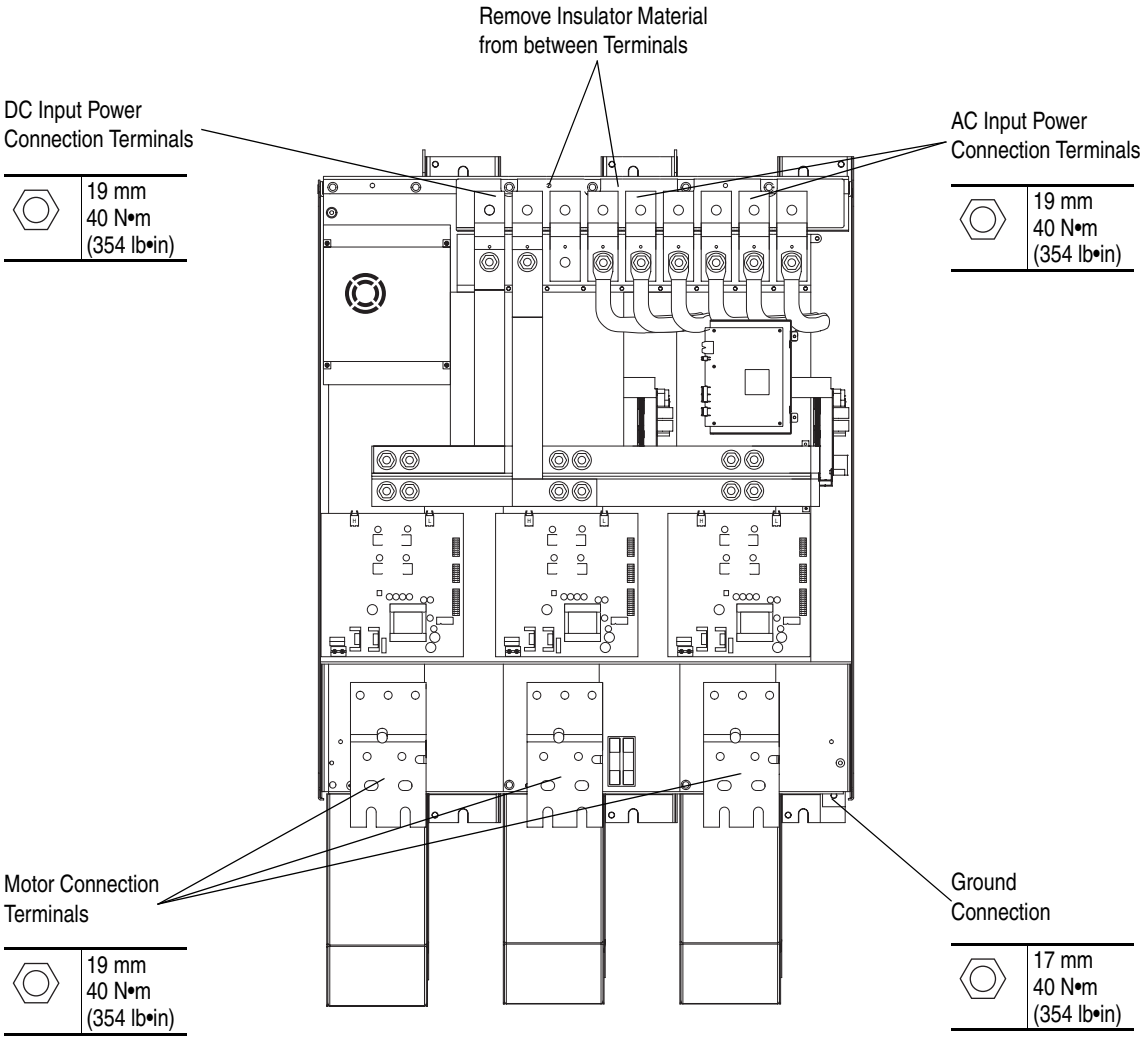

5. Remove the bolts that secure the power structure to the drive enclosure (see Figure 3 below for frame 10 and 12 and Figure 4 on page 12 for frame 11).

6. Follow the instructions in the *PowerFlex 700S and 700H High Power Maintenance Stand, Installation Instructions*, publication PFLEX-IN014, to assemble the maintenance stand.

   Note: The maintenance stand is designed for removing power structures from drives supplied in Rittal TS8 enclosures only. An alternate means of removal is necessary for other types of enclosures.

7. Remove the power structure by sliding it onto the rails of the maintenance stand.

   Important: Do not pull on any of the cables, terminals or circuit board mounts when removing the power structure from the enclosure.

Figure 3 Frame 10 and 12 Drives

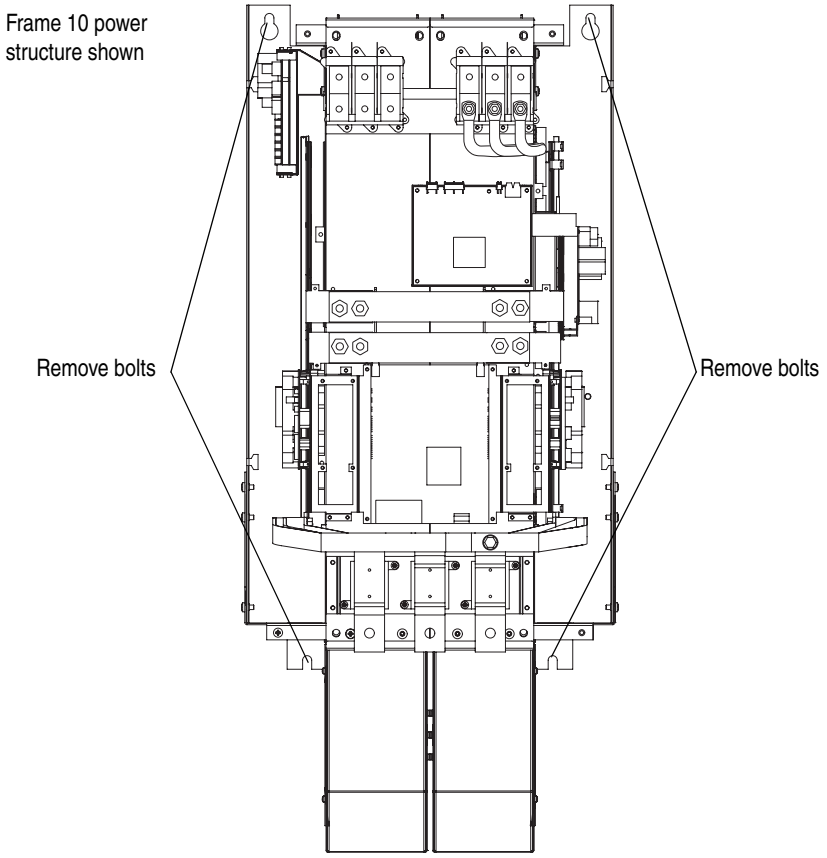

Figure 4 Frame 11 Drives

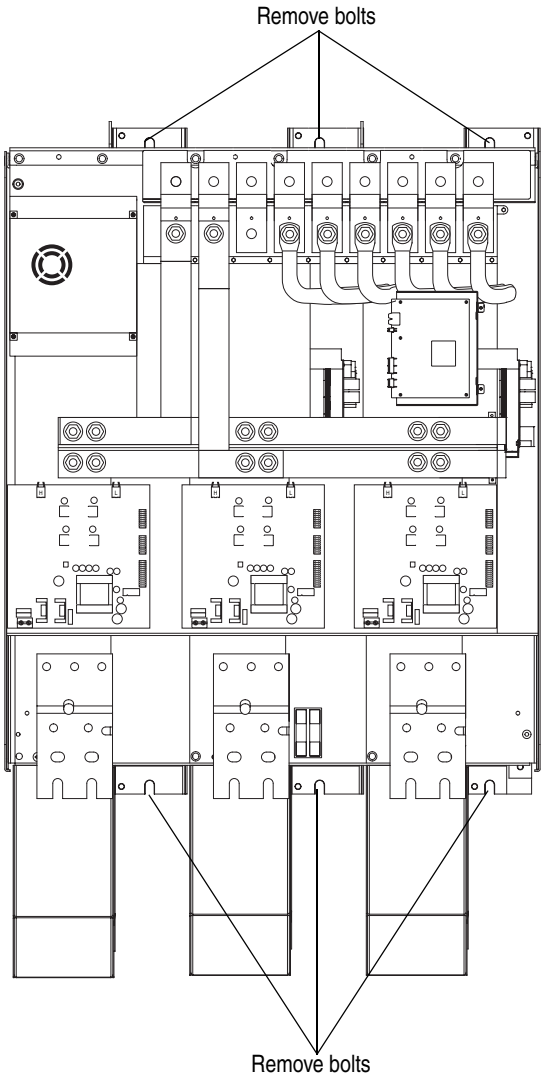

Step 4: Remove the Existing Rectifier Module(s)

The steps for removing the rectifier module(s) from a frame 10 and 12 size drive are different than a frame 11 size drive. Refer to Remove the Rectifier Module(s) from a Frame 10 or 12 Drive on page 13 or Remove the Rectifier Module from a Frame 11 Drive on page 22.

Remove the Rectifier Module(s) from a Frame 10 or 12 Drive

The rectifier module(s) on frame 10 and 12 drives are contained in the right side of the power structure(s).

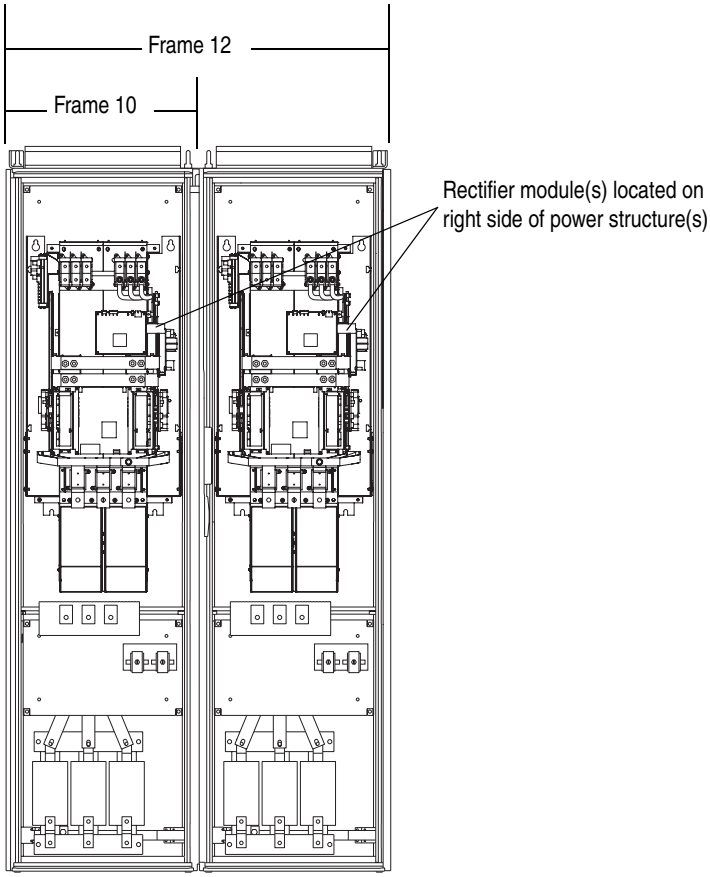

Note: Cut any cable ties securing control and power cables as necessary in order to complete the following procedures. When re-assembling the drive components, all control and power cables must be secured with cable ties in the same manner as they were prior to removal.

Important: Mark all connections and wires before removal to avoid incorrect wiring during reassembly.

1. Remove the two M4x8 hexalobular screws that secure the control power supply wires to the DC- and DC+ bus bars above the Gate Driver board and remove the wires.

2. Loosen, but do not remove, the eight M10 hex nuts that secure the DC- and DC+ connective bus bars to the drive.

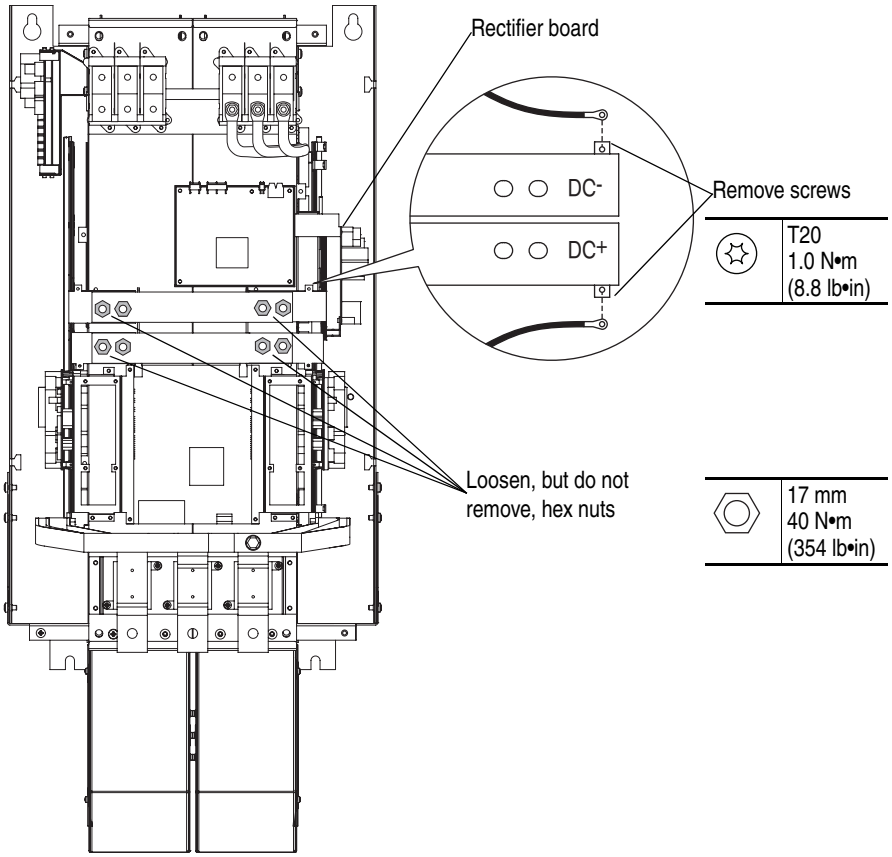

3. For drives with a series “A” rectifier circuit board (catalog number 20-VB00459 for 400/480V AC input drives, 20-VB00460 for 600/690V AC input drives), disconnect the wires from connectors X10, X11, X12 and X13 on the board (see Figure 5 on page 15). For drives with a series “B” rectifier circuit board (catalog number 20-VB00461 for 400/480V AC input drives, 20-VB00462 for 600/690V AC input drives), disconnect the wires from connectors X10, X11, X12, X13, X21 and X31, X22 and X32, and X23 and X33 on the rectifier board (see Figure 6 on page 15).

Figure 5 Series A Rectifier Circuit Board

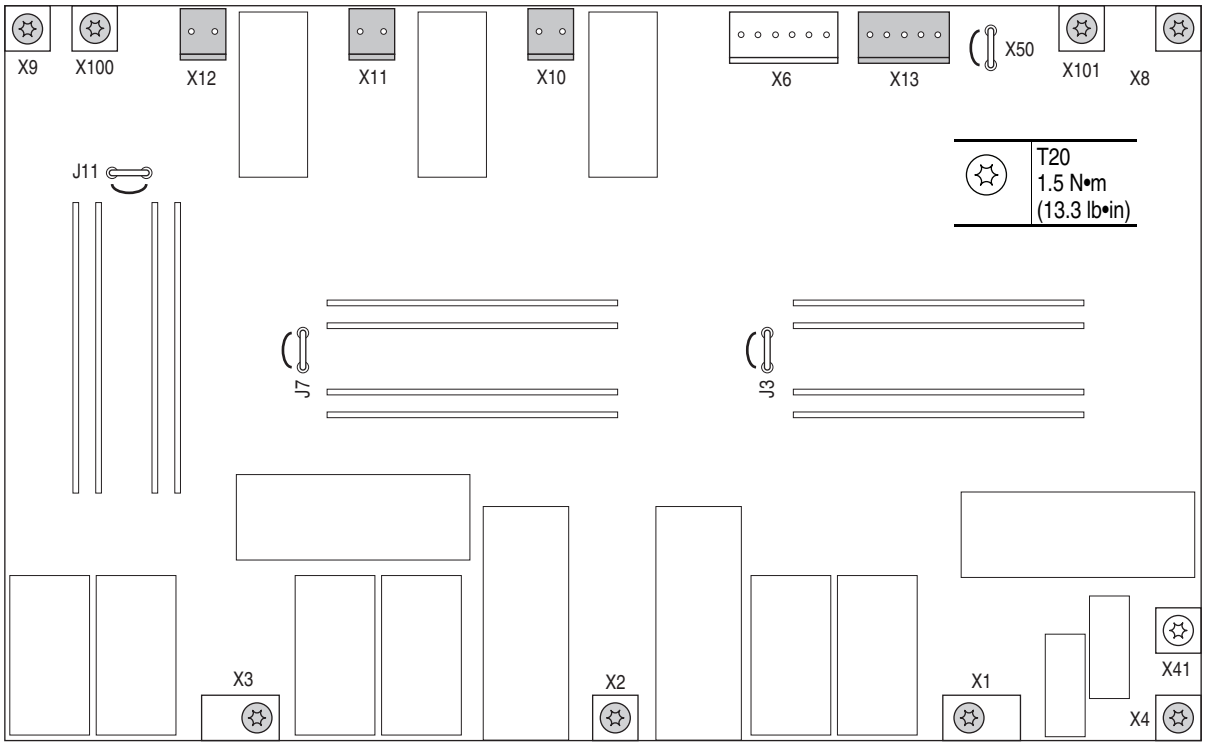

Figure 6 Series B Rectifier Circuit Board

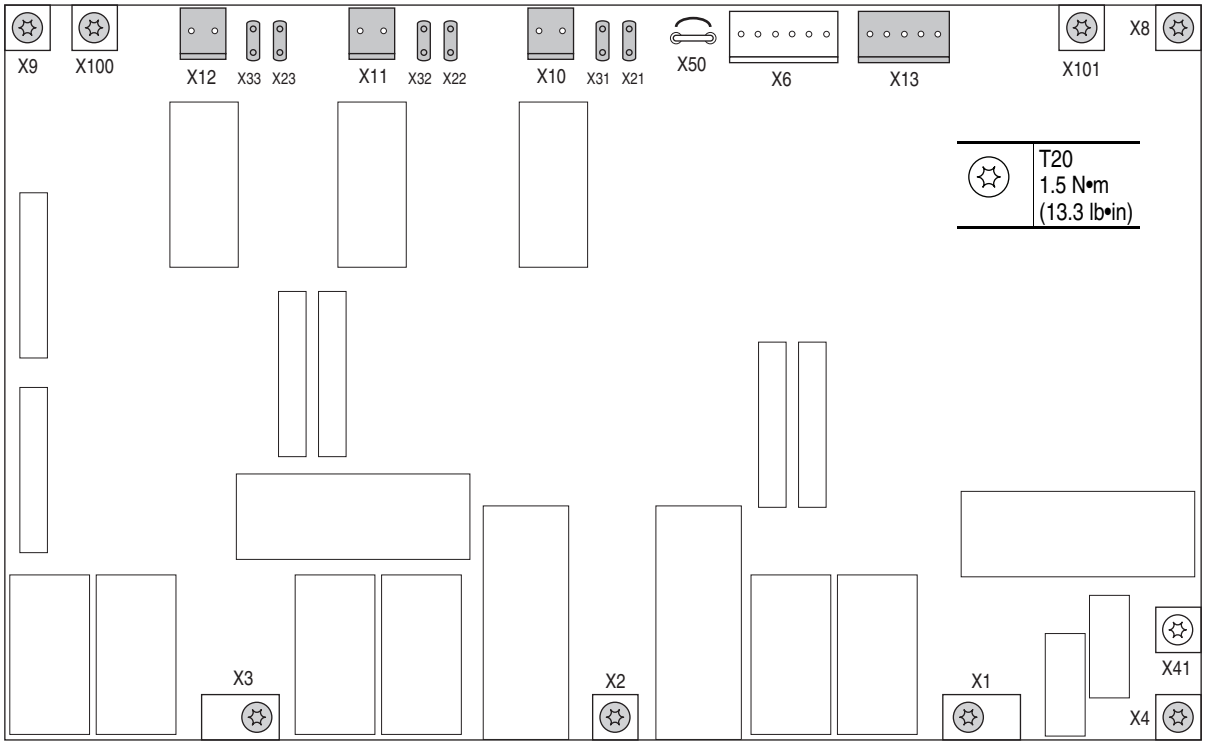

4. If the common mode jumper is in the lowered position (as show below), remove the M4x8 hexalobular screw that secures the jumper to the bracket connected to the rectifier board.

   Important: Note the position of the jumper before removal and ensure that it is placed in the same position when the rectifier board is installed.

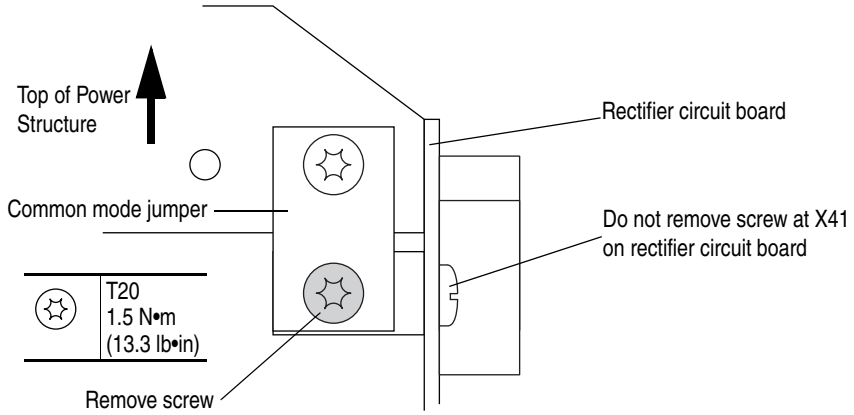

5. Remove the eight hexalobular screws that secure the rectifier board to the drive (do not remove the screw at X41) and remove the board from the rectifier module. Two M4x12 screws at X8 and X9. The remaining screws are M4x8.

6. Lift the insulator material and remove the M10x20 bolts and washers that secure the AC input cables and SCR terminal bus bars to the rectifier module's SCR terminals and remove the AC input cables and terminal bus bars.

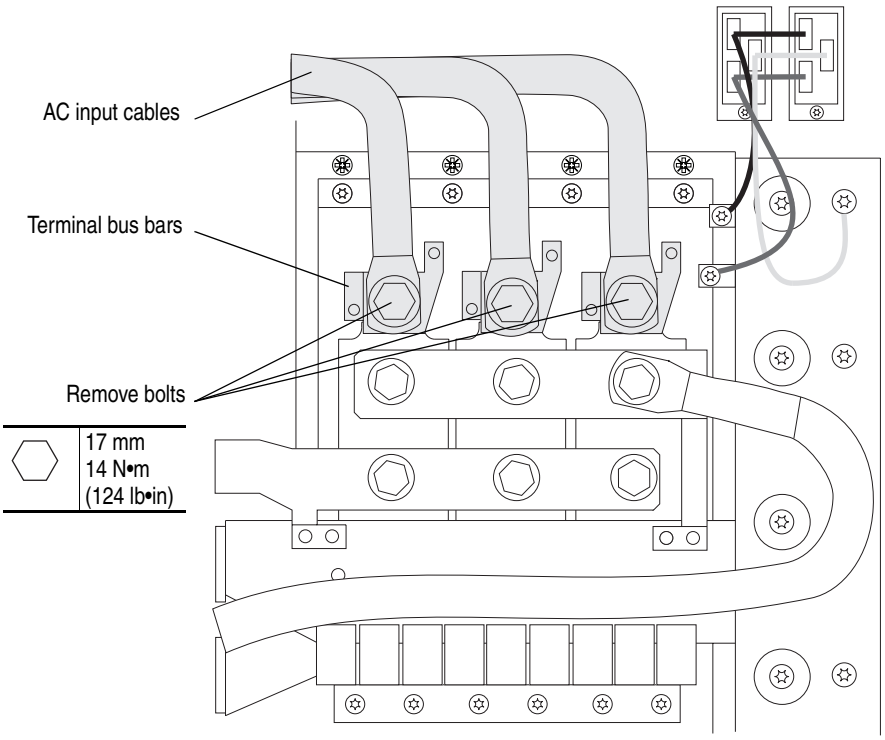

7. Remove the six M10x20 bolts and washers that secure the DC- and DC+ rectifier bus bars and power cable to the SCRs on the rectifier module and remove the bus bars and power cable.

   Important: Do Not reuse the existing DC+ rectifier bus bar.

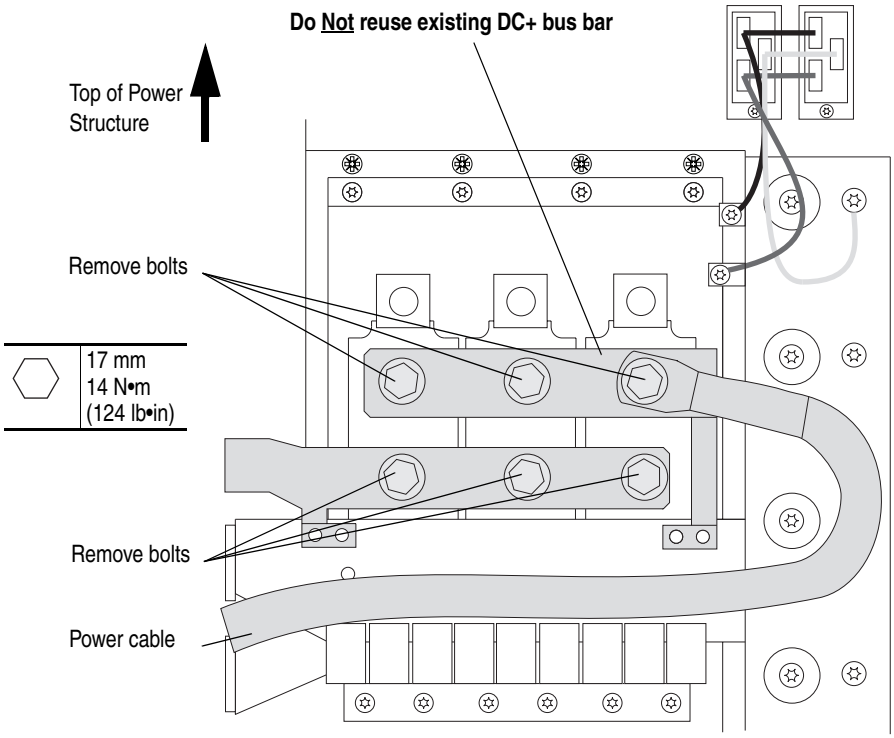

8. For 400/480V AC input drives, remove the three hexalobular screws that secure the balancing resistor wires to the main bus bars. For 600/690V AC input drives, remove the four hexalobular screws that secure the balancing resistor wires to the main bus bars.

Important: Note the color (if unique) and location of each resistor connector wire. Mark all connections and wires before removal to avoid incorrect wiring during reassembly.

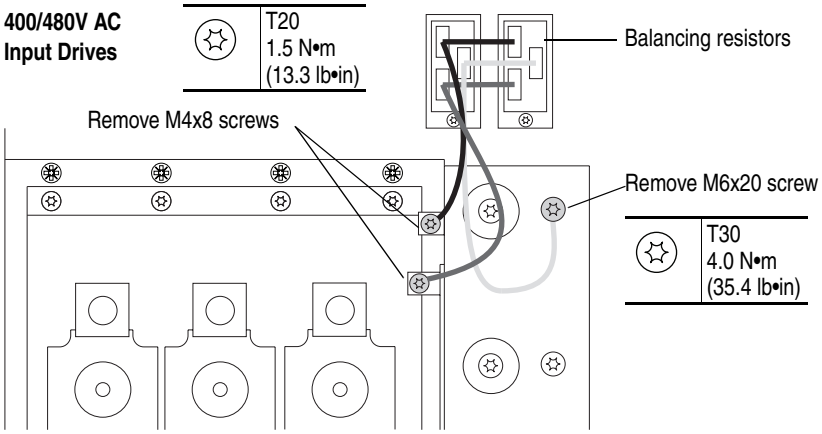

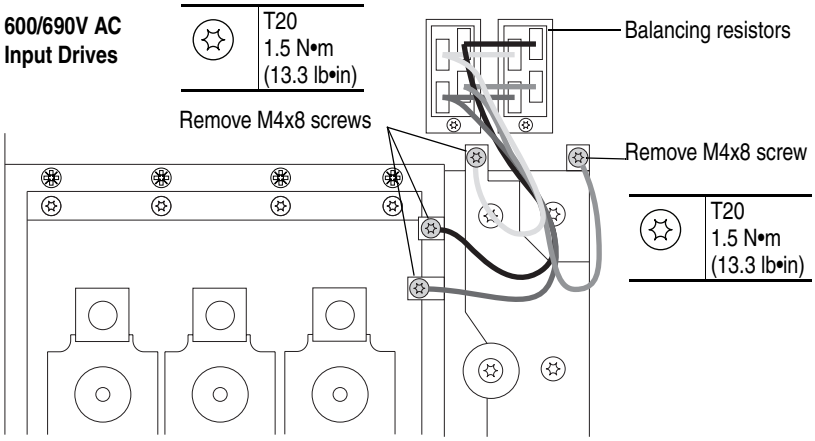

9. Remove the six M6x20 hexalobular screws that secure the snubber capacitor assembly to the power module.

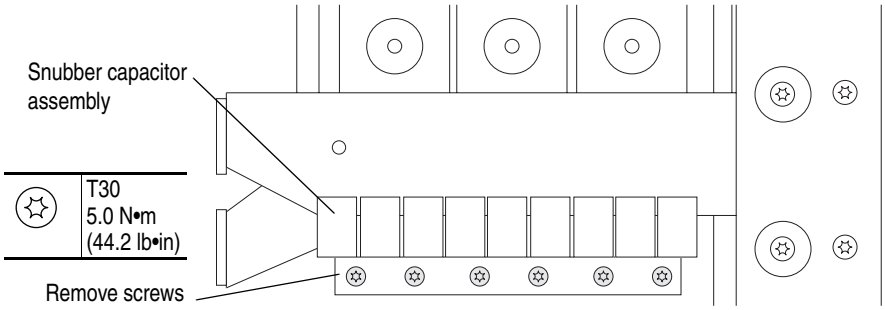

10. Remove the bus bars and insulator sheets from the drive. The steps to remove the bus bars from a 400/480V AC input drive are different than the steps to remove the bus bars from a 600/690V AC input drive. Refer to Remove the Bus Bars from a 400/480V AC Input Drive below or Remove the Bus Bars from a 600/690V AC Input Drive on page 20.

Remove the Bus Bars from a 400/480V AC Input Drive

- Remove the six M6x20 hexalobular screws that secure the outer bus bar to the drive and remove the bus bar and the loose bus bar insulator sheet.
- Remove the three M6x20 hexalobular screws that secure the main DC- bus bar to the drive and remove the main DC- bus bar and the loose bus bar insulator sheet.
- Remove the three M6x16 hexalobular screws that secure the main DC+ bus bar to the drive and remove the main DC+ bus bar and the loose capacitor insulator sheet.

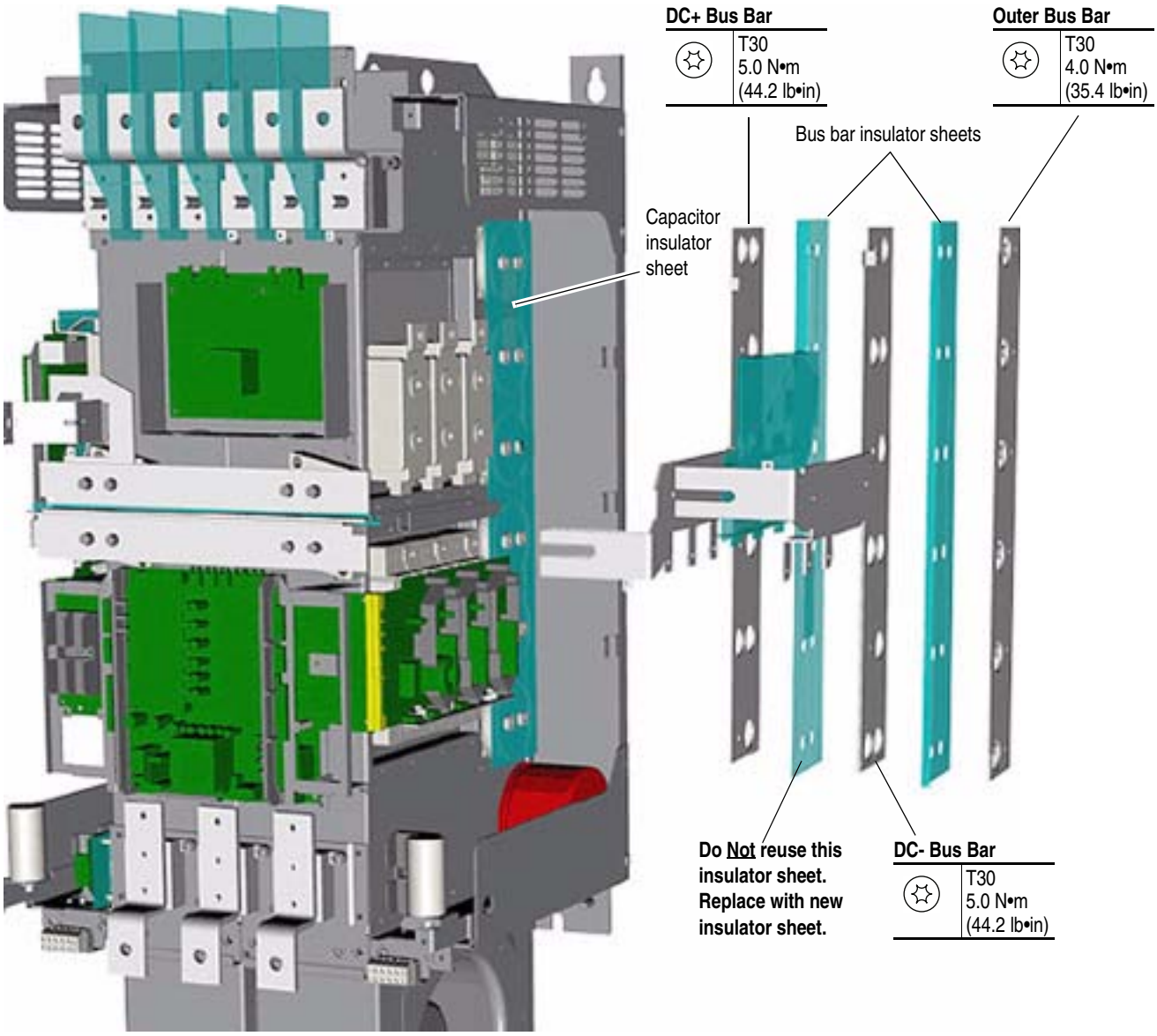

Remove the Bus Bars from a 600/690V AC Input Drive

- Remove the four M6x25 hexalobular screws that secure the outer bus bar to the drive and remove the bus bar and the loose bus bar insulator sheet.
- Remove the four M6x20 hexalobular screws that secure the next bus bar to the drive and remove the bus bar and the loose bus bar insulator sheet.
- Remove the two M6x20 hexalobular screws that secure the main DC- bus bar to the drive and remove the main DC- bus bar and the loose bus bar insulator sheet.
- Remove the two M6x16 hexalobular screws that secure the main DC+ bus bar to the drive and remove the main DC+ bus bar and the loose capacitor insulator sheet.

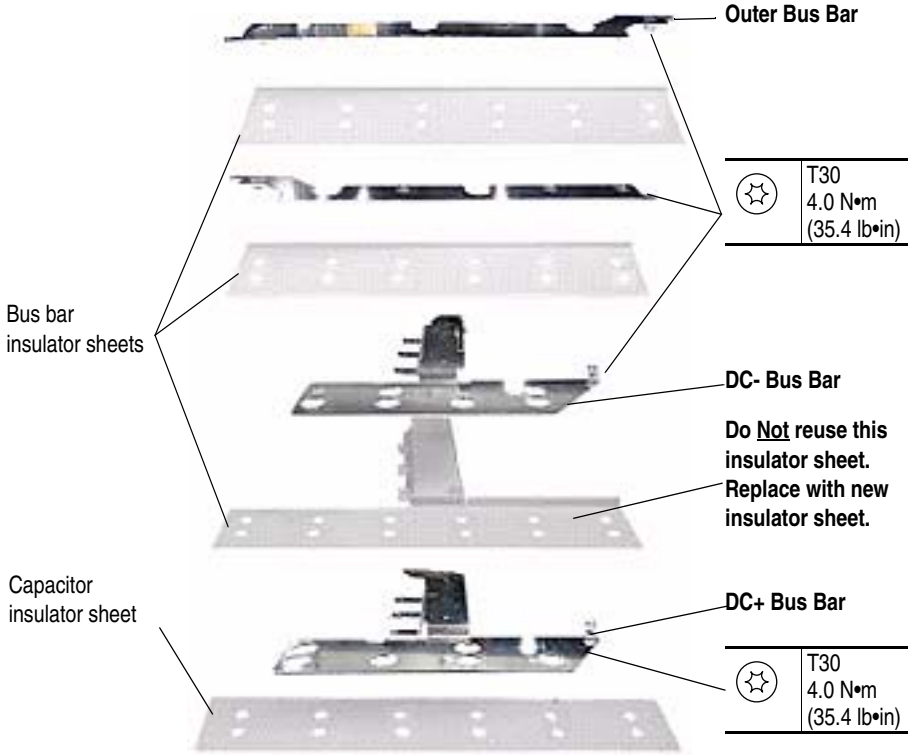

11. Remove the eight M4x8 POZIDRIV screws that secure the rectifier module to the drive frame and remove the module.

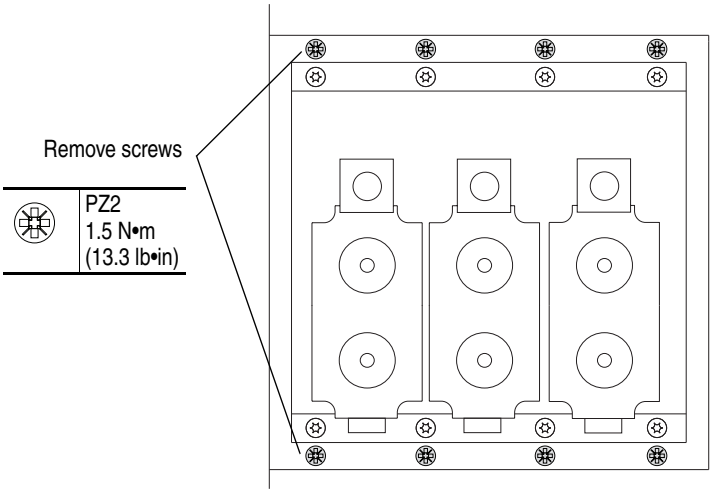

12. Continue with Step 5: Install the New Rectifier Module on page 43.

Remove the Rectifier Module from a Frame 11 Drive

The rectifier module(s) on frame 11 drives are contained in the V and W phase power structure(s). 690V AC input 460A and 502A frame 11 drives only have one rectifier module contained in the V phase power structure.

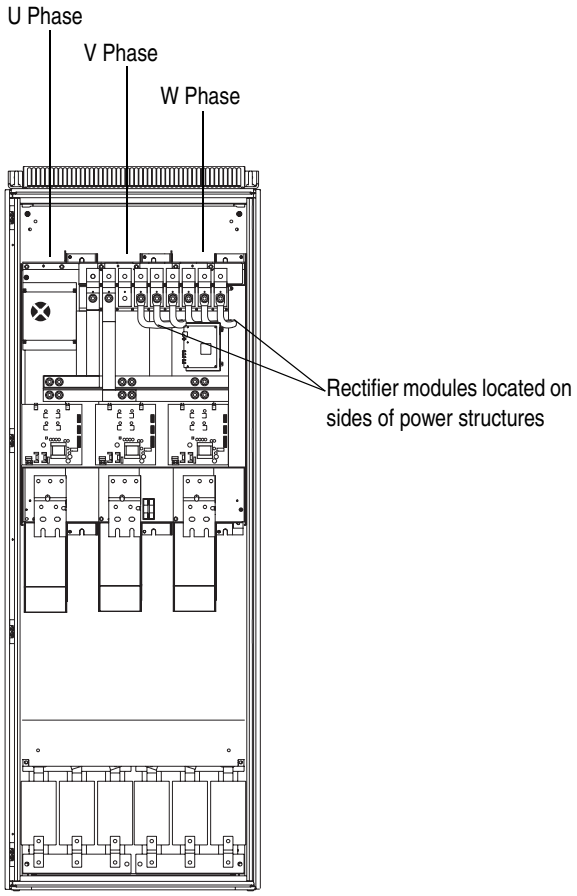

Note: Cut any cable ties securing control and power cables as necessary in order to complete the following procedures. When re-assembling the drive components, all control and power cables must be secured in the same manner as they were prior to removal.

Important: Mark all connections and wires before removal to avoid incorrect wiring during reassembly.

ATTENTION: The sheet metal cover and mounting screws on the ASIC Board located on the power structure are energized at (-) DC bus potential high voltage. Risk of electrical shock, injury, or death exists if someone comes into contact with the assembly.

1. Remove the four M4x8 POZIDRIV screws that secure the ASIC board cover to the assembly and lift the cover off the assembly - you must unplug the cable for the ASIC board assembly fan from connector X1 on the ASIC board in order to remove the cover.

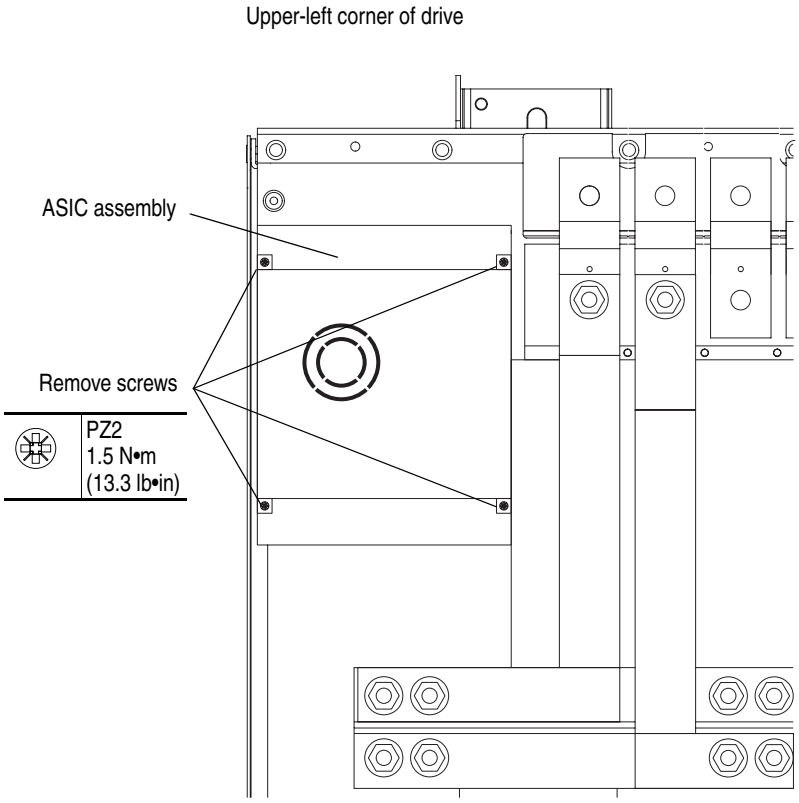

2. Carefully disconnect the fiber-optic cables from sockets H1…H13 of the ASIC board and carefully set them aside (see illustration below).

ATTENTION: Hazard of permanent eye damage exists when using optical transmission equipment. This product emits intense light and invisible radiation. Do not look into fiber-optic ports or fiber-optic cable connectors.

Important: Minimum inside bend radius for fiber-optic cable is 25.4 mm (1.0 in.). Any bends with a shorter inside radius can permanently damage the fiber-optic cable. Signal attenuation increases with decreased inside bend radii.

3. Disconnect the cables from connectors X2, X3, X4, X5, X6, X10 and X11 (and X9 and X15, if present) on the front of the ASIC board, and set them aside.

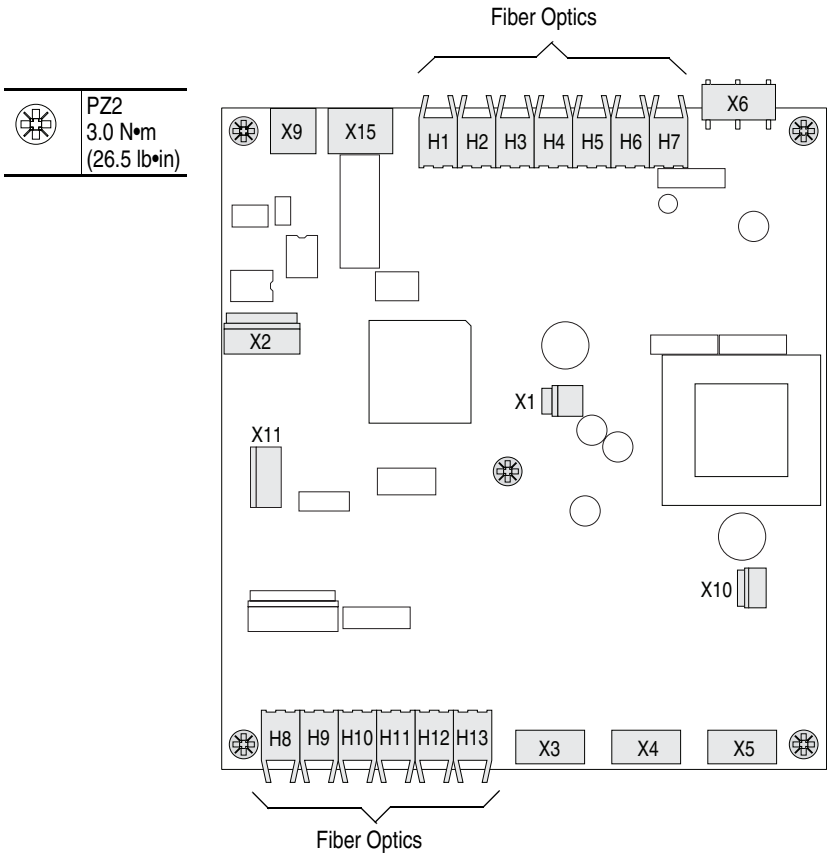

4. Remove the five POZIDRIV screws that secure the ASIC assembly to the drive and remove the assembly.

5. Carefully disconnect the fiber-optic cables from sockets H15 and H16 on each of the three gate driver boards and carefully set them aside (see illustration below).

ATTENTION: Hazard of permanent eye damage exists when using optical transmission equipment. This product emits intense light and invisible radiation. Do not look into fiber-optic ports or fiber-optic cable connectors.

Important: Minimum inside bend radius for fiber-optic cable is 25.4 mm (1.0 in.). Any bends with a shorter inside radius can permanently damage the fiber-optic cable. Signal attenuation increases with decreased inside bend radii.

6. Remove the cables from connectors X6 and the DC+/DC- terminals from the connector at the bottom of the three gate driver boards.

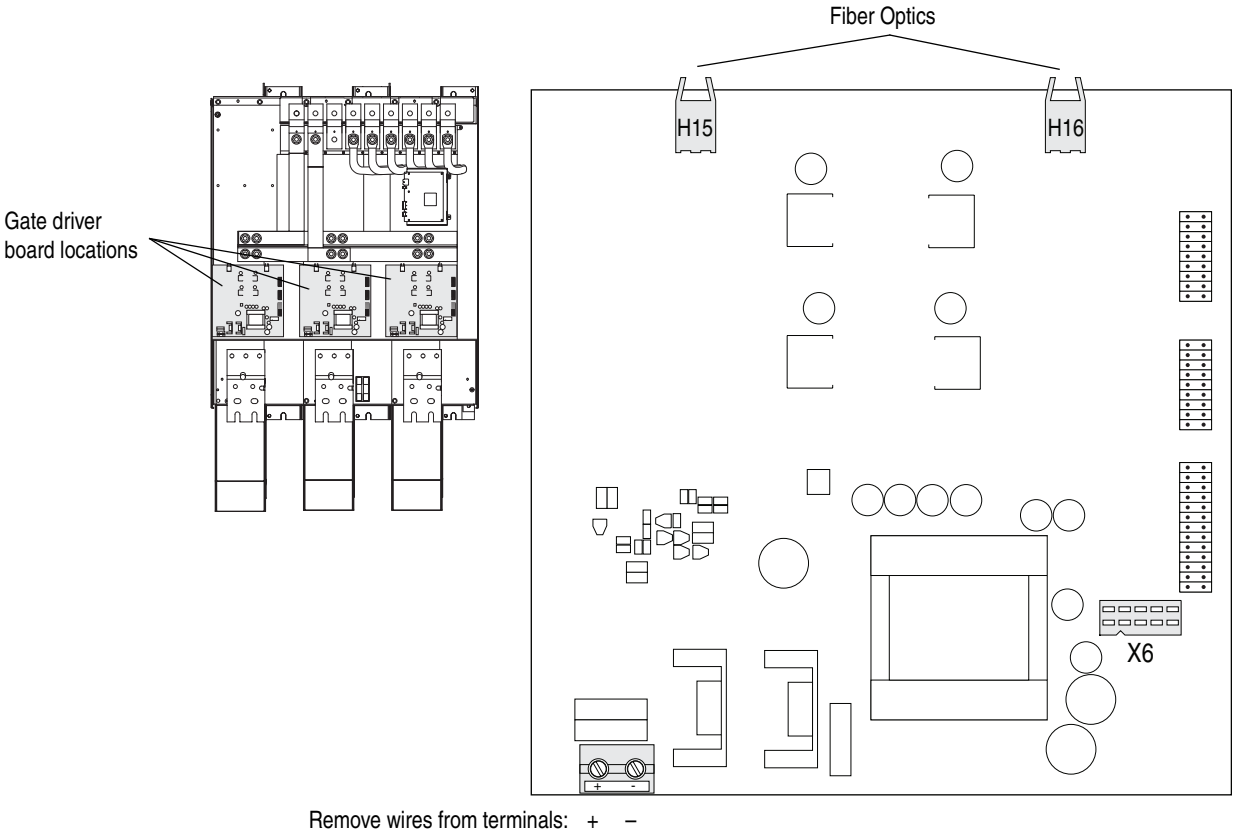

7. Remove the two screws that secure the wires for the ASIC board power supply to the DC+ and DC- bus bars and disconnect the cables for the fan power and control from the connectors as indicated below. The fan power wires connect to the base of the fuse holder on the V phase module.

8. Remove the air flow sheet from below the gate driver boards.

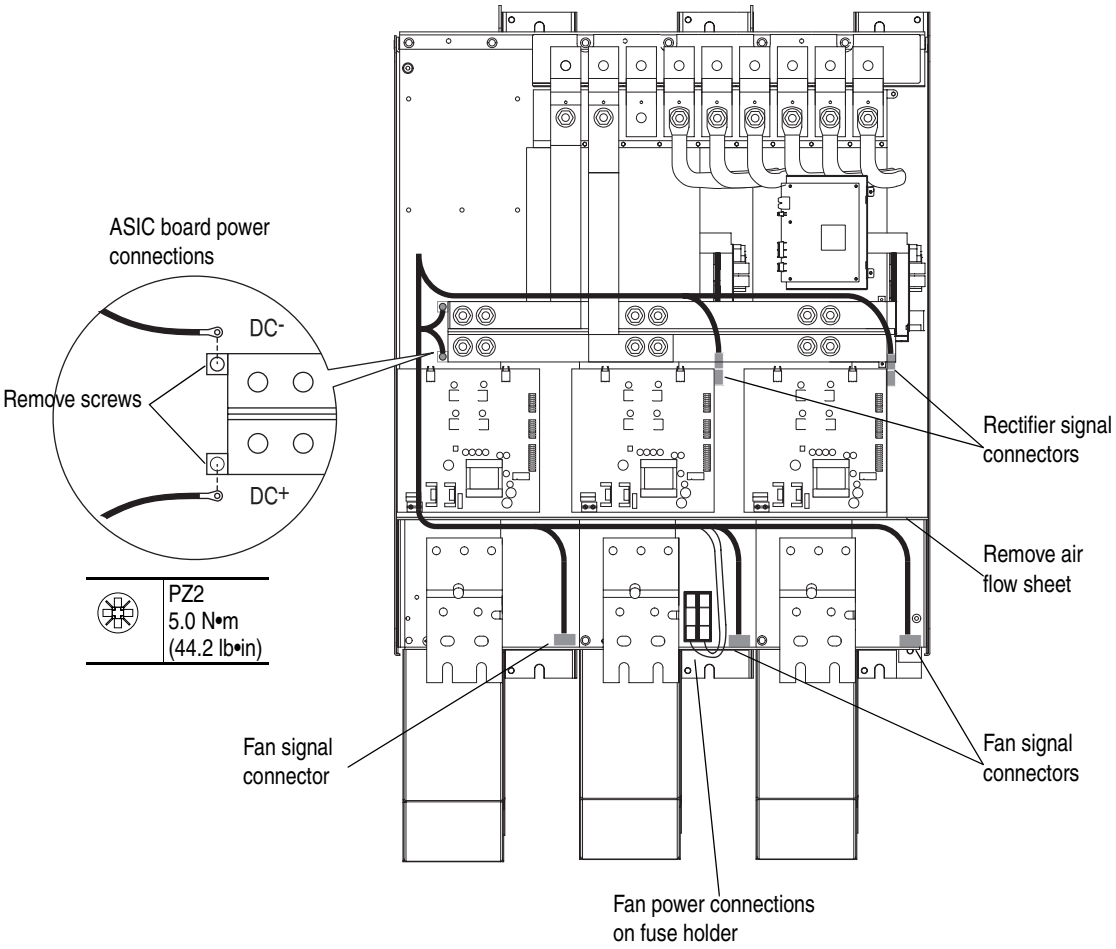

9. For PowerFlex 700H drives, continue with step 12 on page 28.
   For PowerFlex 700S drives only, carefully disconnect the fiber-optic cables from sockets J4 and J5 on the voltage feedback board and carefully set them aside.

ATTENTION: Hazard of permanent eye damage exists when using optical transmission equipment. This product emits intense light and invisible radiation. Do not look into fiber-optic ports or fiber-optic cable connectors.

Important: Minimum inside bend radius for fiber-optic cable is 25.4 mm (1.0 in.). Any bends with a shorter inside radius can permanently damage the fiber-optic cable. Signal attenuation increases with decreased inside bend radii.

10. Disconnect the DC bus connection cable from connector J2 and the motor feedback connection cable from connector J3 on the voltage feedback board.

11. Disconnect the cable from connector J8 on the voltage feedback board.

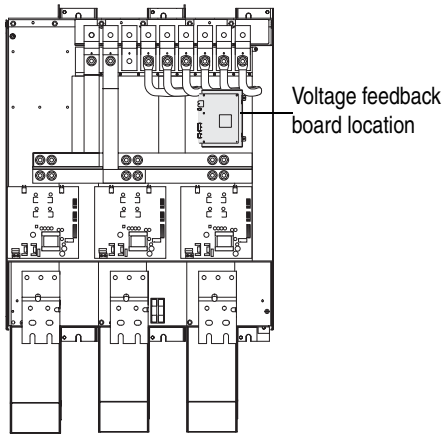

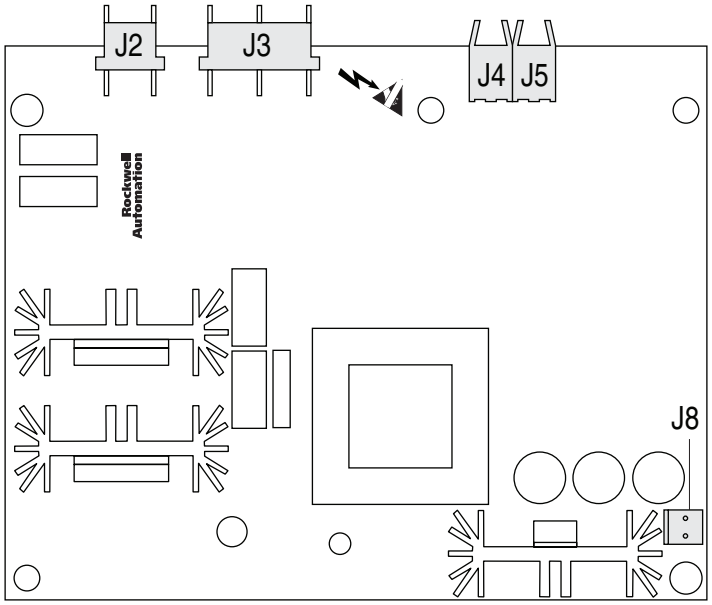

12. The V and W phase modules must be removed from the power structure in order to remove the rectifier modules. Therefore, you must lift the power structure off the maintenance stand and place it, rear side of the unit down, on a clean, suitable work surface. Follow the steps below to lift and move the power structure.

a. Fasten the lifting hardware to the holes in the flanges on the top of the power structure, symmetrically, in at least two holes. The maximum angle between the cables must be no more than 45 degrees.

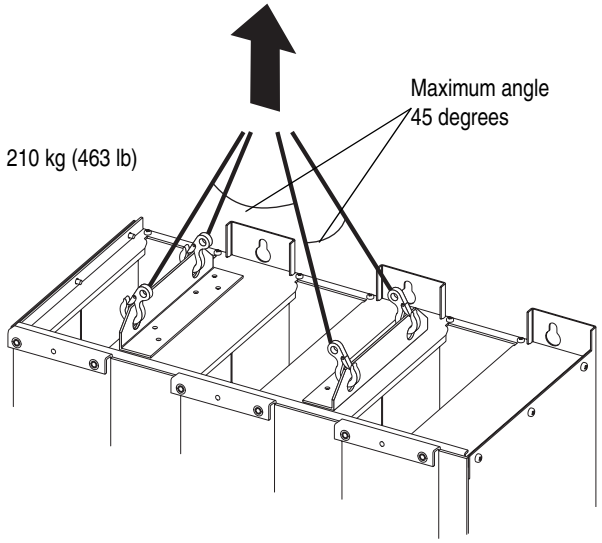

b. Lift the power structure off of the maintenance stand and place it, rear side down, on the work surface.

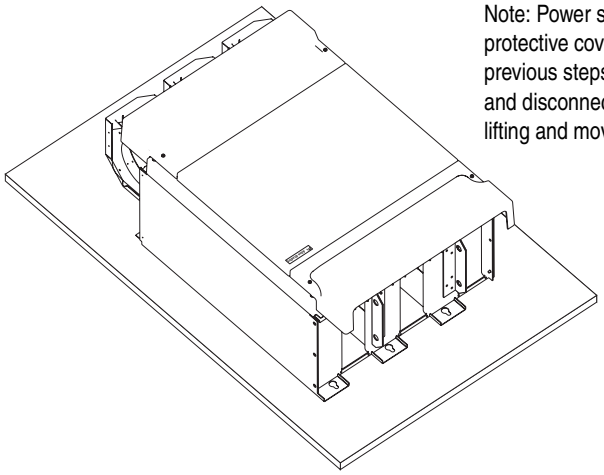

Note: Power structure shown with protective covers. Complete the previous steps to remove the covers and disconnect control wiring before lifting and moving the power structure.

13. For drives with DC bus supply terminals, remove the six M10 nuts and washers that secure the bus bars that connect the DC– and DC+ terminals to the horizontal bus bars and remove the bus bars.

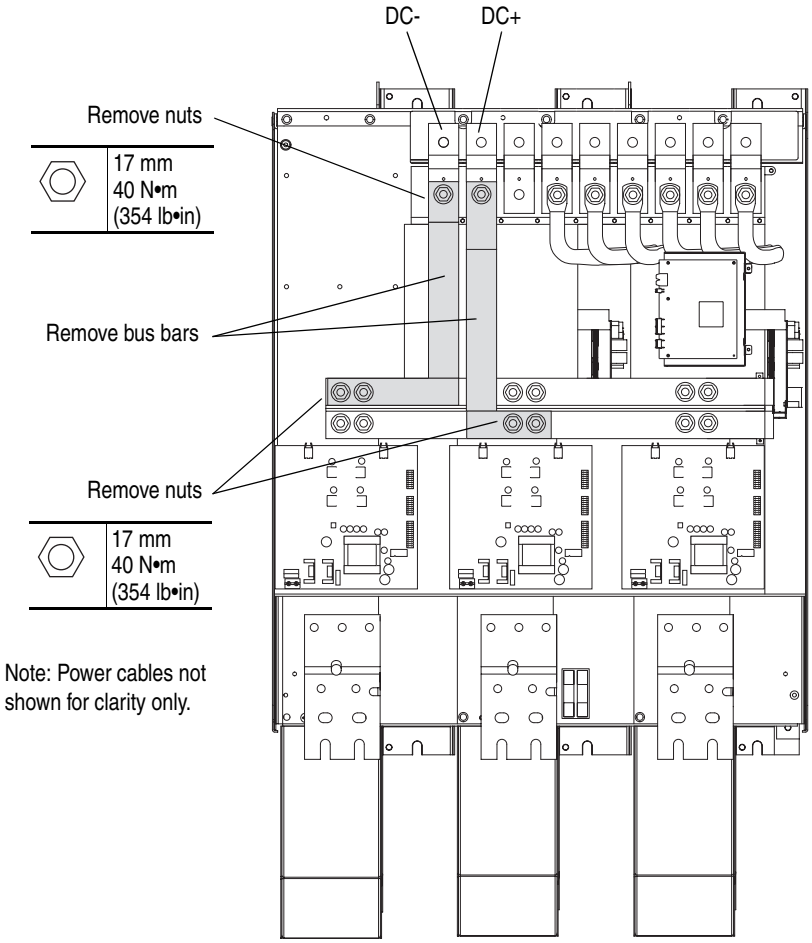

14. Remove the four M10 bolts and washers that secure the power cables to the rectifier circuit output terminals.

15. Remove the four M10 nuts and washers that secure the other end of the power cables to the DC– and DC+ collector bus bars and remove the cables.

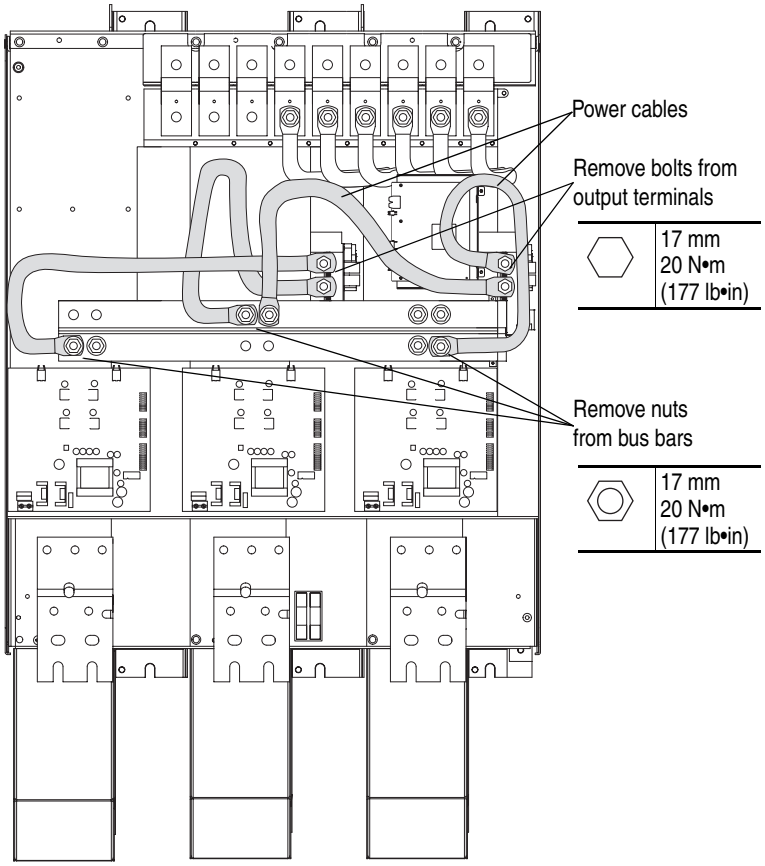

16. Remove the four remaining nuts and washers that secure the DC– and DC+ collector bus bars to the drive, and remove the bus bars and insulator material between them.

Important: The insulator material must be installed between the bus bars during installation.

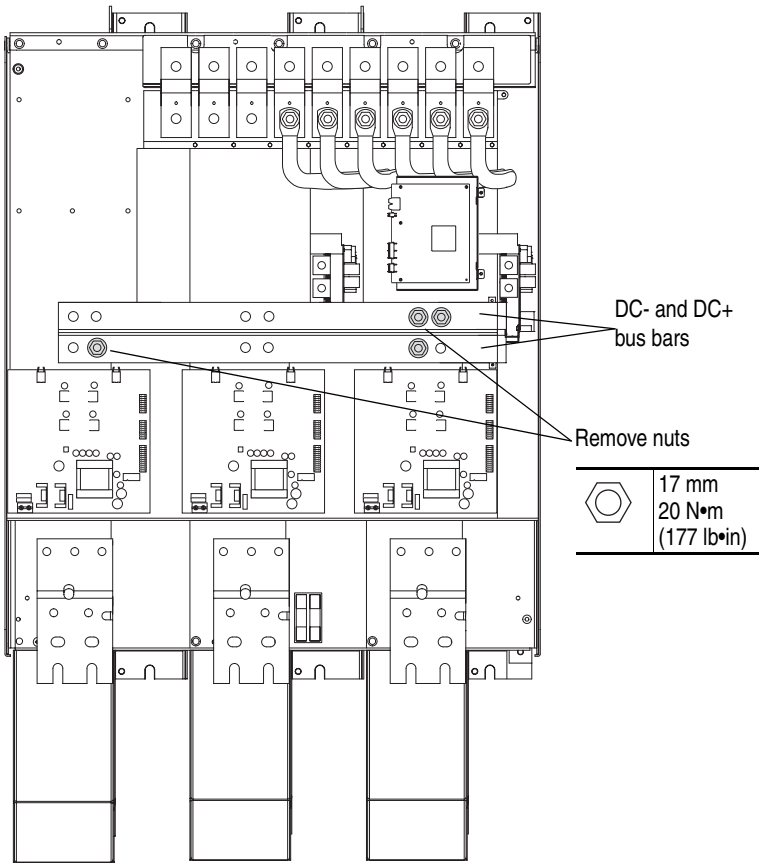

17. Remove the six M10 nuts and washers that secure the AC supply cables to the AC input terminals and remove the cables. Note: Frame 11 690V AC input, 460A and 502A drives, only have one set of AC input terminals and therefore one set of AC supply cables.

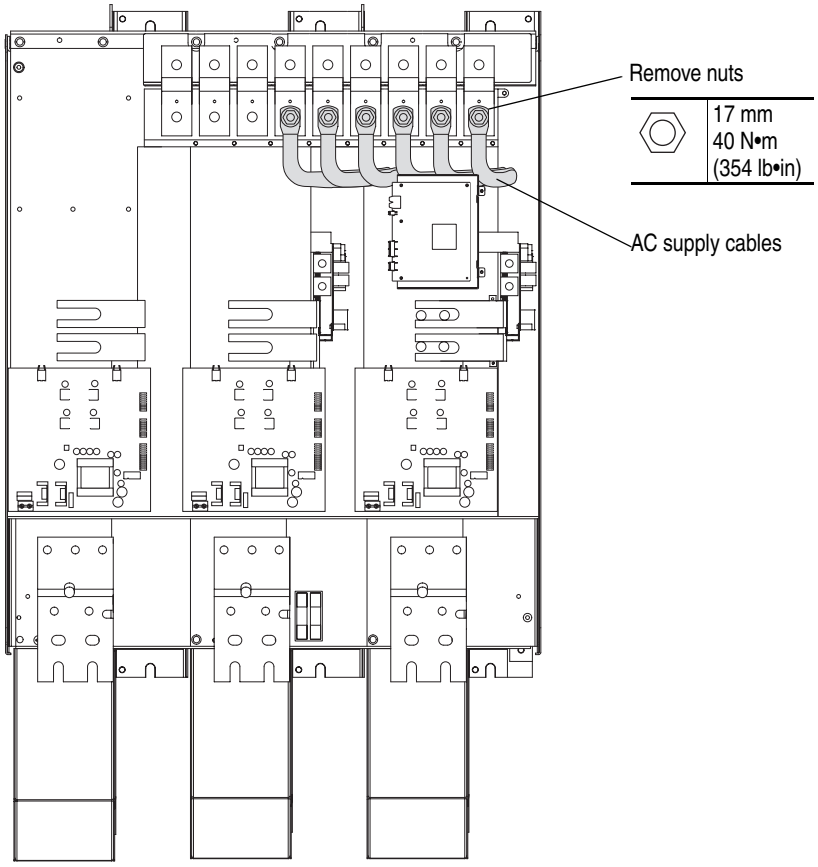

18. Remove the eight POZIDRIV screws that secure the terminal assembly to the drive and remove the assembly.

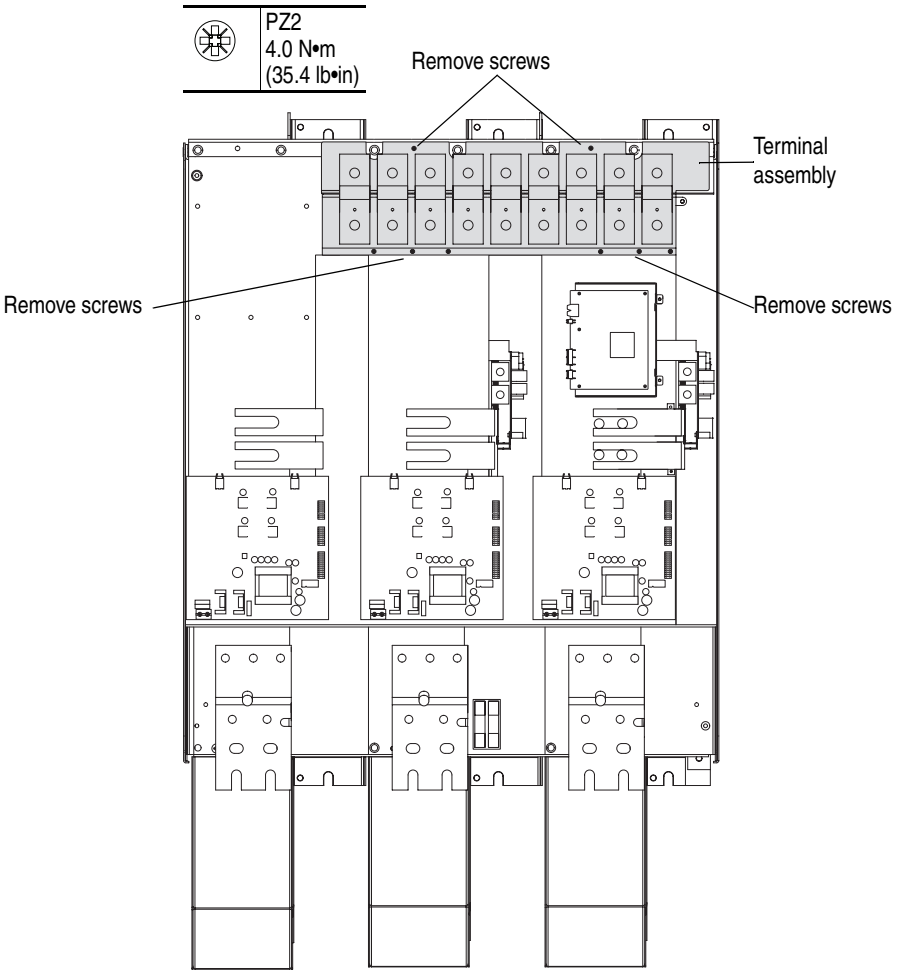

19. Remove the four M10 hexagonal screws that secure each of the V and W phase modules to the drive frame.

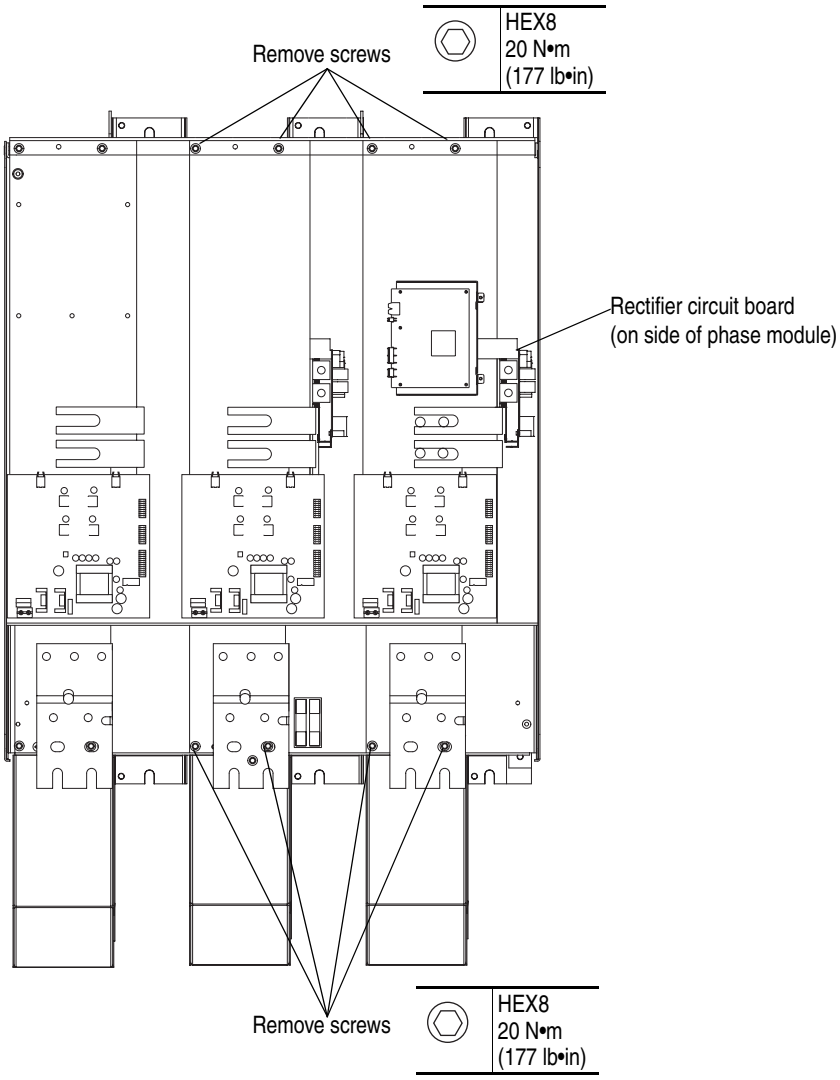

20. Remove the six M5 and six M6 POZIDRIV screws that secure the upper sheet metal plate of the power structure frame to the lower frame and remove the upper metal plate.

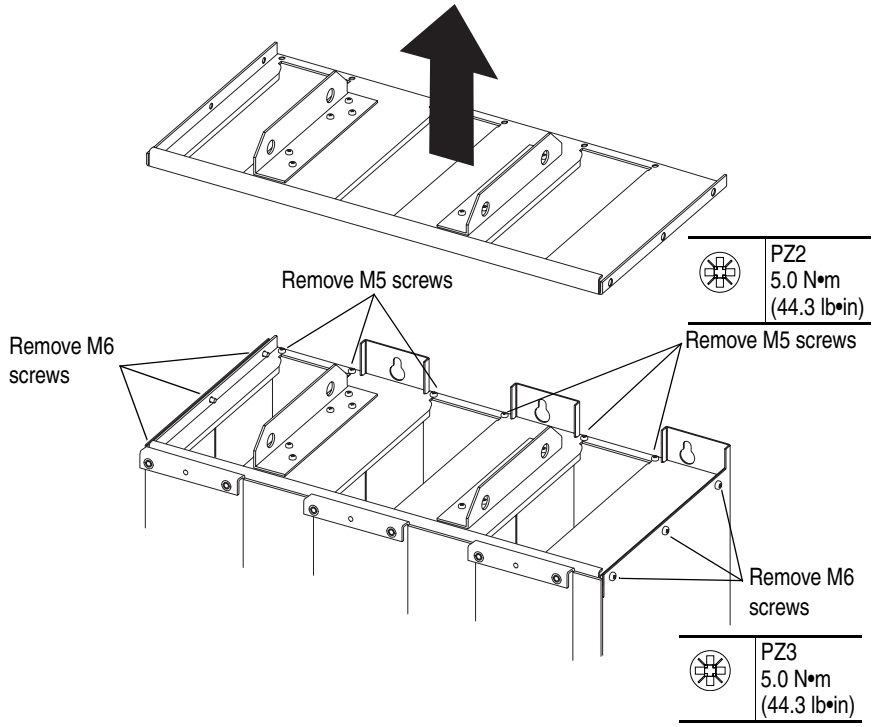

21. Carefully remove the phase module from the top of the drive frame.

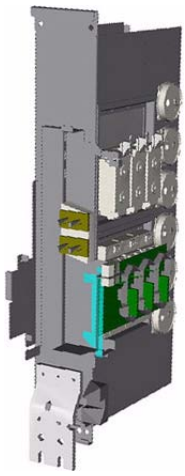

22. For drives with a series “A” rectifier circuit board (catalog number 20-VB00459 for 400/480V AC input drives, 20-VB00460 for 600/690V AC input drives), disconnect the wires from connectors X10, X11, X12 and X13 on the rectifier board (see Figure 7 on page 36). For drives with a series “B” rectifier circuit board (catalog number 20-VB00461 for 400/480V AC input drives, 20-VB00462 for 600/690V AC input drives), disconnect the wires from connectors X10, X11, X12, X13, X21 and X31, X22 and X32, and X23 and X33 on the rectifier board (see Figure 8 on page 36).

Figure 7 Series A Rectifier Circuit Board

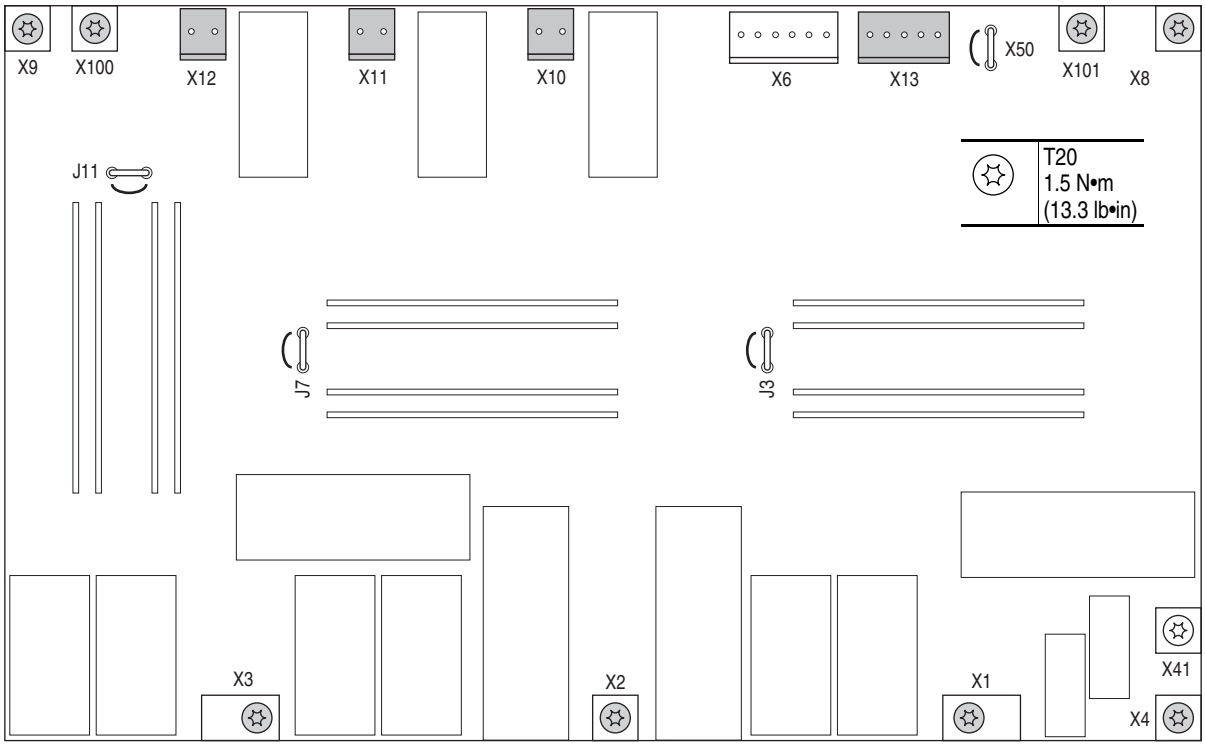

Figure 8 Series B Rectifier Circuit Board

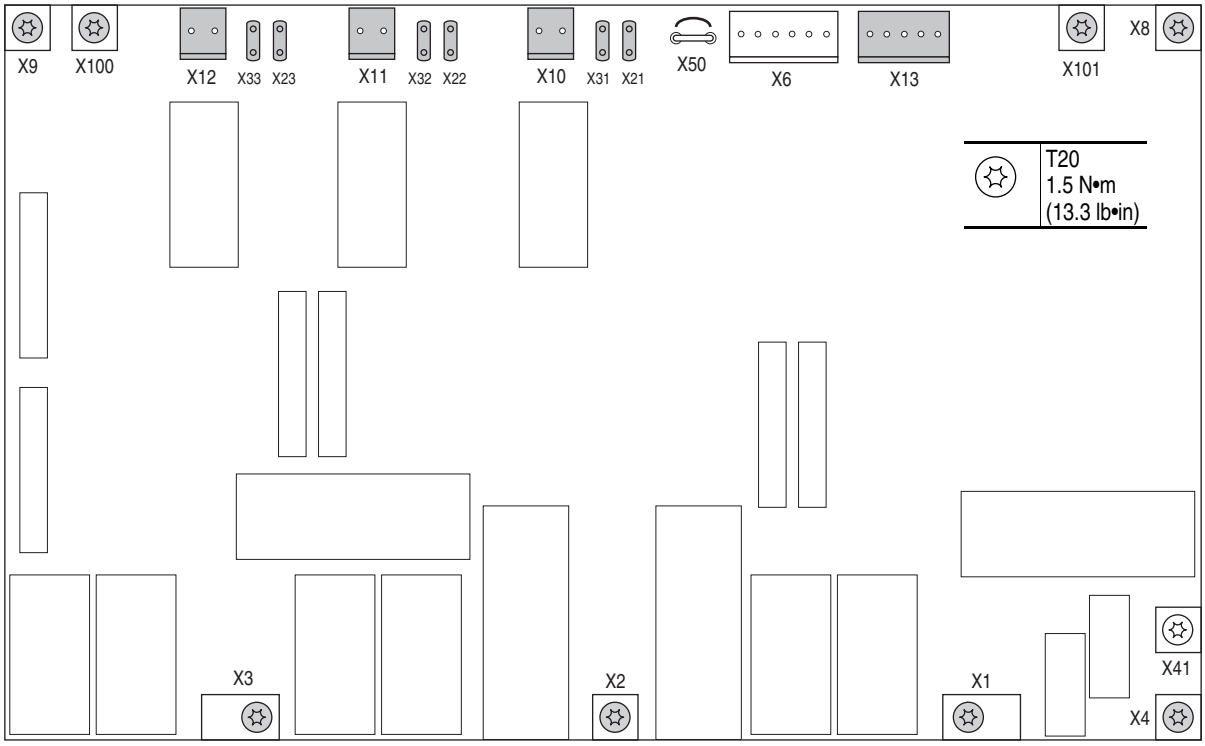

23. If the common mode jumper is in the lowered position (as show below), remove the M4x8 hexalobular screw that secures the jumper to the bracket connected to the rectifier board.

Important: Note the position of the jumper before removal and ensure that it is placed in the same position when the rectifier board is installed.

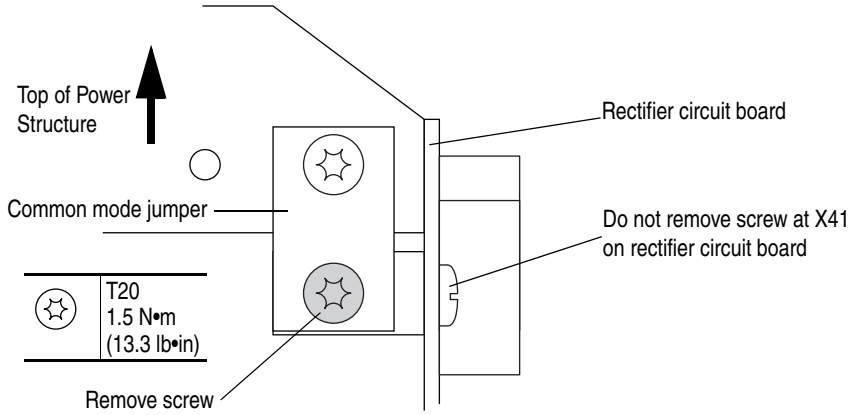

24. Remove the eight screws that secure the rectifier board to the drive (do not remove the screw at X41) and remove the board from the rectifier module. Two M4x12 screws at X8 and X9. The remaining screws are M4x8.

25. Remove the three M5 nuts and three M4x8 hexalobular screws that secure the snubber capacitors to the DC+ bus bar and SCR terminal bus bars and remove the capacitors.

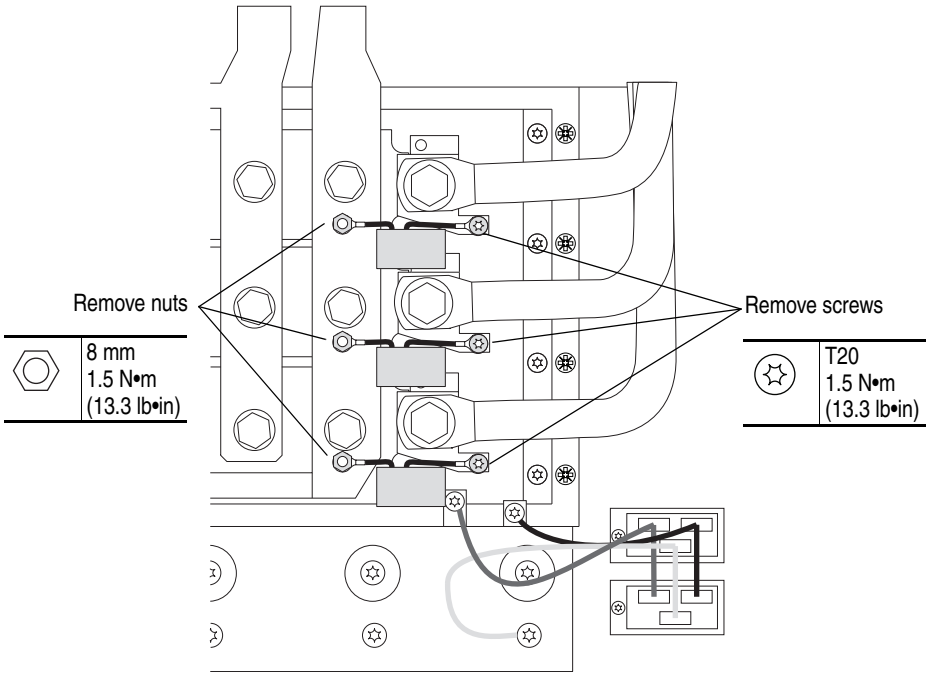

26. Remove the M10 bolts and washers that secure the AC input supply cables and SCR terminal bus bars to the rectifier module and remove the cables and bus bars from the rectifier module.

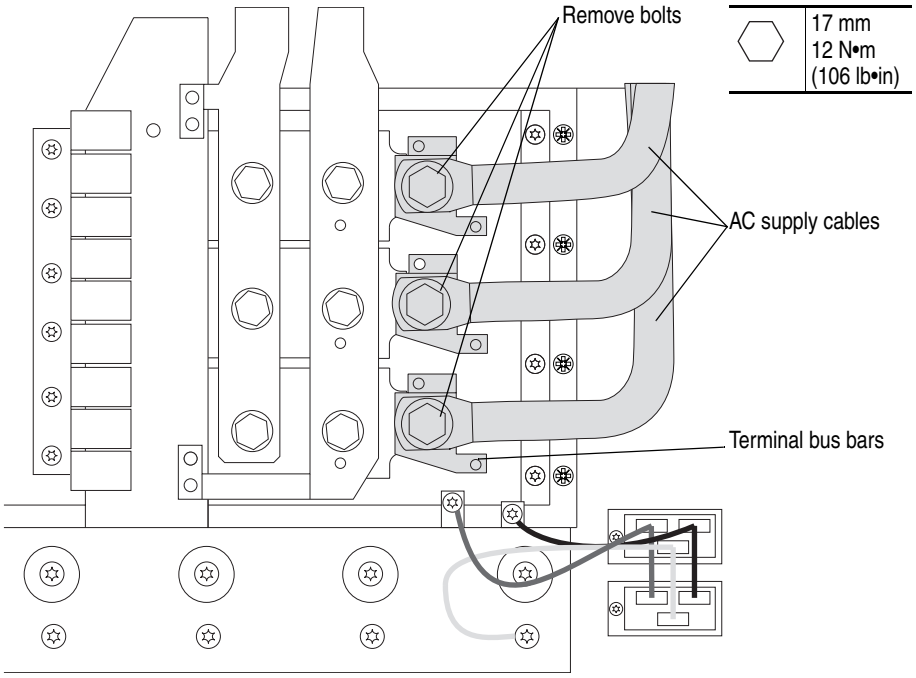

27. Remove the six M10x20 bolts and washers that secure the DC- and DC+ rectifier bus bars to the rectifier module and remove the bus bars.

Important: Do Not reuse the existing DC+ rectifier bus bar.

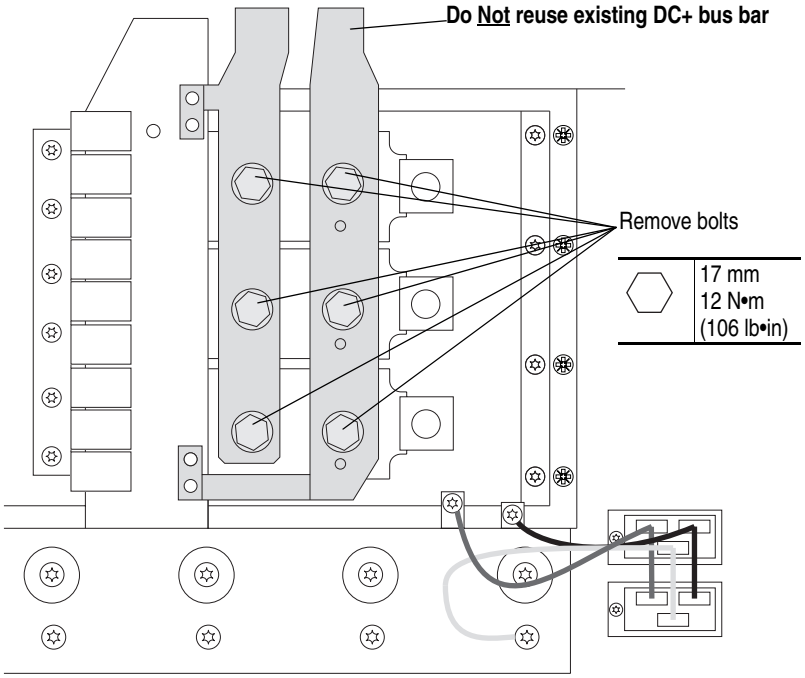

28. For 400/480V AC input drives, remove the three hexalobular screws that secure the balancing resistor wires to the main bus bars. For 600/690V AC input drives, remove the four hexalobular screws that secure the balancing resistor wires to the main bus bars.

Important: Note the color (if unique) and location of each resistor connector wire. Mark all connections and wires before removal to avoid incorrect wiring during reassembly.

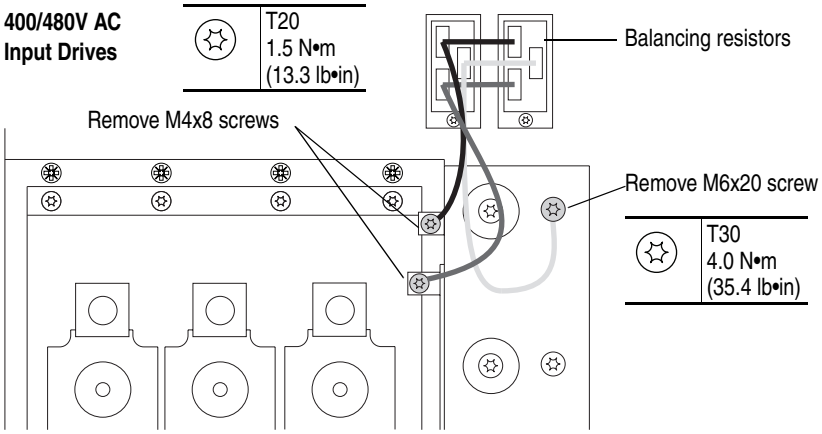

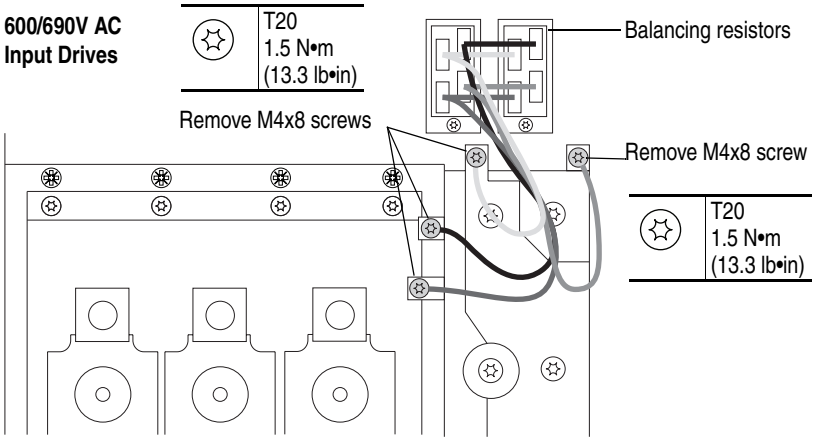

29. Remove the six M6x20 hexalobular screws that secure the snubber capacitor assembly to the power module and bus bars.

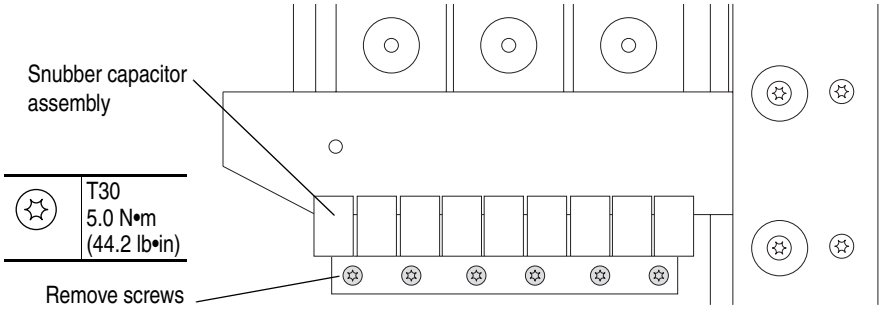

30. Remove the bus bars and insulator sheets - the steps to remove the bus bars from a 400/480V AC input drive are different than the steps to remove the bus bars from a 600/690V AC input drive. Refer to Remove the Bus Bars from a 400/480V AC Input Drive below or Remove the Bus Bars from a 600/690V AC Input Drive on page 41.

Remove the Bus Bars from a 400/480V AC Input Drive

- Remove the six M6x20 POZIDRIV screws that secure the outer bus bar to the drive and remove the bus bar and the loose bus bar insulator sheet.
- Remove the three M6x20 POZIDRIV screws that secure the main DC- bus bar to the drive and remove the main DC- bus bar and the loose bus bar insulator sheet.
- Remove the three M6x20 POZIDRIV screws that secure the main DC+ bus bar to the drive and remove the main DC+ bus bar and the loose capacitor insulator sheet.

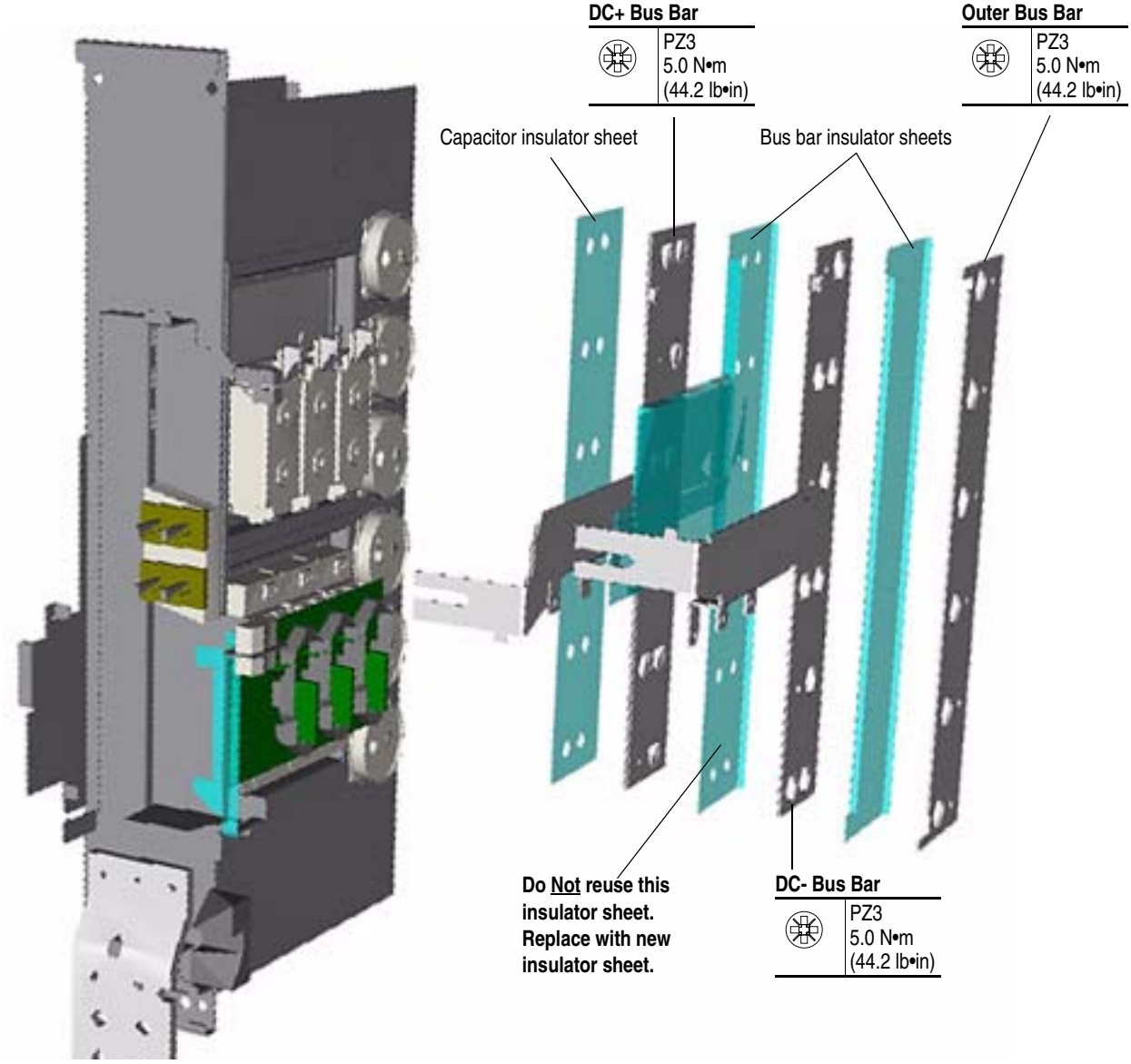

Remove the Bus Bars from a 600/690V AC Input Drive

- Remove the four M6x25 hexalobular screws that secure the outer bus bar to the drive and remove the bus bar and the loose bus bar insulator sheet.
- Remove the four M6x20 hexalobular screws that secure the next bus bar to the drive and remove the bus bar and the loose bus bar insulator sheet.
- Remove the two M6x20 hexalobular screws that secure the main DC- bus bar to the drive and remove the main DC- bus bar and the loose bus bar insulator sheet.
- Remove the two M6x16 hexalobular screws that secure the main DC+ bus bar to the drive and remove the main DC+ bus bar and the loose capacitor insulator sheet.

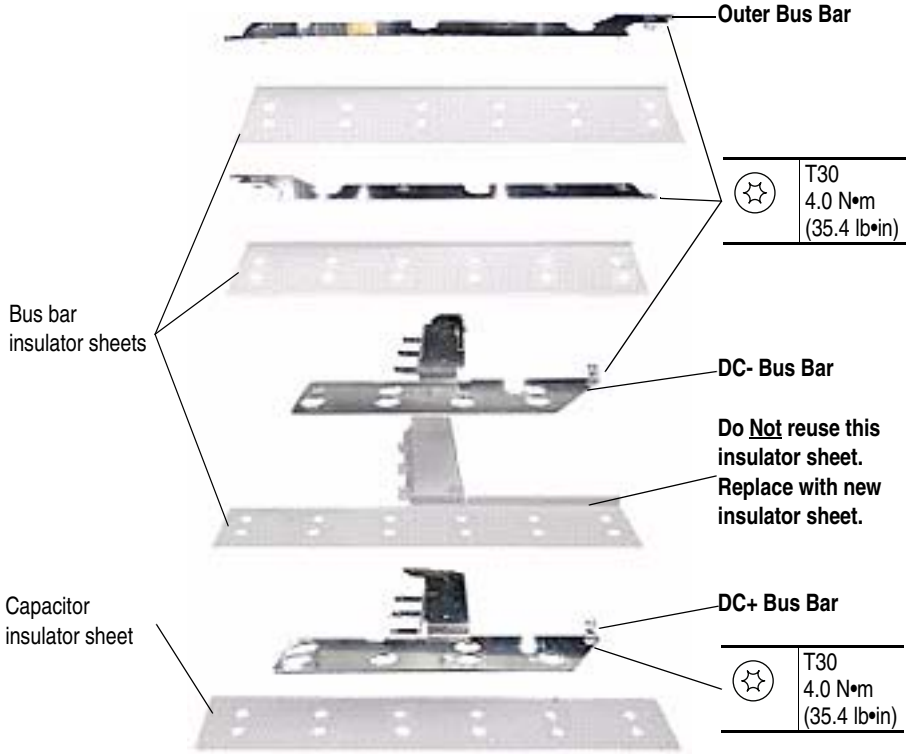

31. Remove the eight M4x8 POZIDRIV screws that secure the rectifier module to the drive frame and remove the module.

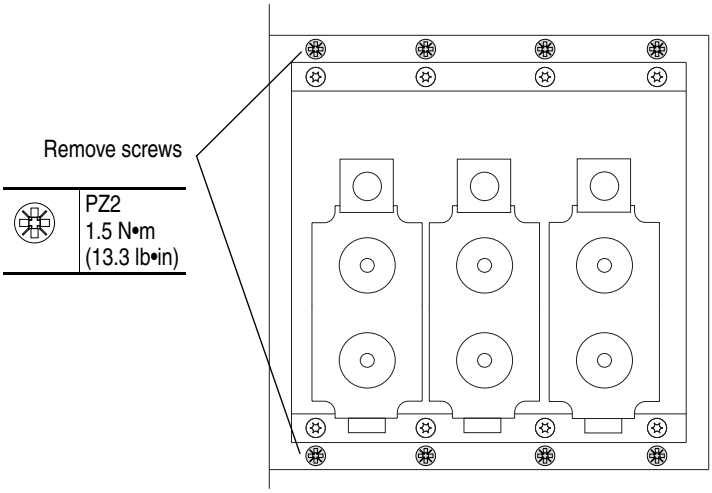

32. Continue with Step 5: Install the New Rectifier Module below.

Step 5: Install the New Rectifier Module

Install the new rectifier module, in the reverse order of removal.
Refer to Step 4: Remove the Existing Rectifier Module(s) on page 12.

ATTENTION: A hazard of personal injury and/or equipment damage exists if the rectifier DC+ bus bar for round SCR terminals is installed on the rectifier module provided with this kit. Do Not reuse the rectifier DC+ bus bar that was used on the round SCR terminals and install the rectifier DC+ bus bar provided with this kit only.

Important: You must only install the rectifier DC+ bus bar provided with this kit. See illustration below.

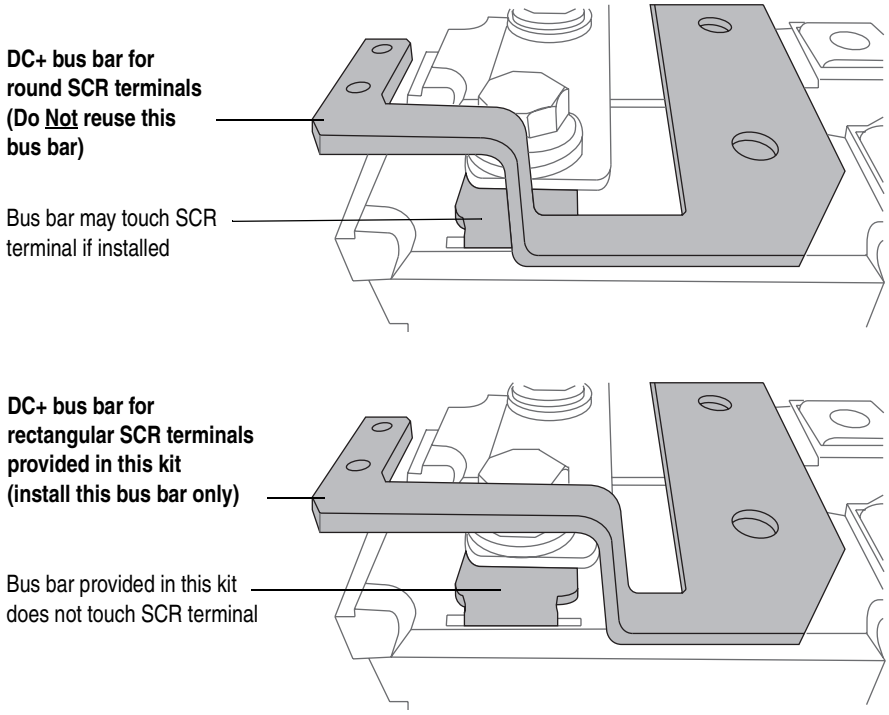

Important: You must only install the new insulator sheet provided with the kit over the rectifier module.

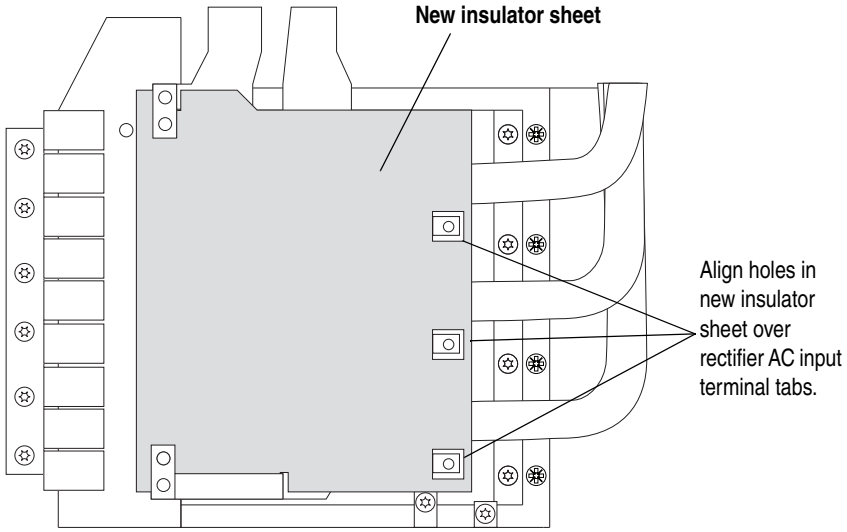

Step 6: Install the Power Structure in the Enclosure

Install the power structure in the drive enclosure in the reverse order of removal. Refer to Step 3: Remove the Power Structure from the Enclosure on page 9.

Step 7: Complete the Circuit Tests

Forward and Reverse Biased Diode Tests for Major Power Components

A forward biased diode test checks the semiconductor junctions between the terminals and measures the voltage drop across those junctions. To pass each test, the meter must display a voltage near 0.5V. If the test finds a short, the meter will display ".000." If the test finds an open circuit or reversed polarity, the meter will display ".0L" (zero load).

A reverse biased diode test should find an open circuit, and the meter should display ".0L" (zero load).

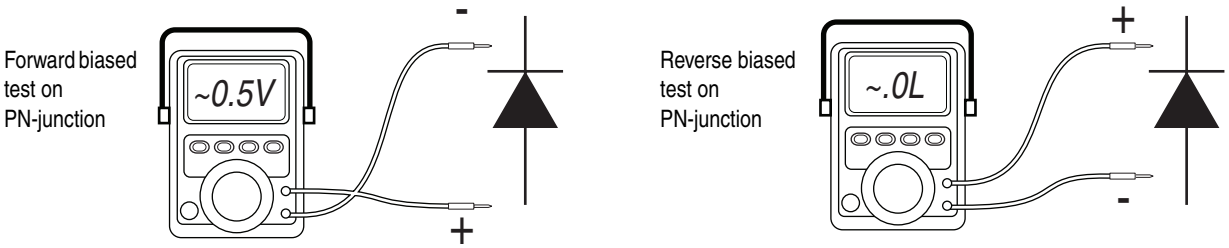

There is a series A and series B rectifier circuit board for each voltage class. The tests you can perform and the results of those tests vary depending on which series of board is in your drive. Verify the board catalog number before completing the appropriate tests below.

	Rectifier Circuit Board Catalog Number	
Voltage Class	**Series A**	**Series B**
400/480V AC	20-VB00459	20-VB00461
600/690V AC	20-VB00460	20-VB00462

1. Verify that no power is applied to the drive.
2. Disconnect all motor leads from the drive.
3. Complete the forward and reverse biased diode tests on the rectifier modules (if present) as indicated in Measurement Points for Forward and Reverse Diode Tests Frame 10 and 12 Drives on page 45 or Measurement Points for Forward and Reverse Diode Tests Frame 11 Drives on page 47.

Measurement Points for Forward and Reverse Diode Tests Frame 10 and 12 Drives

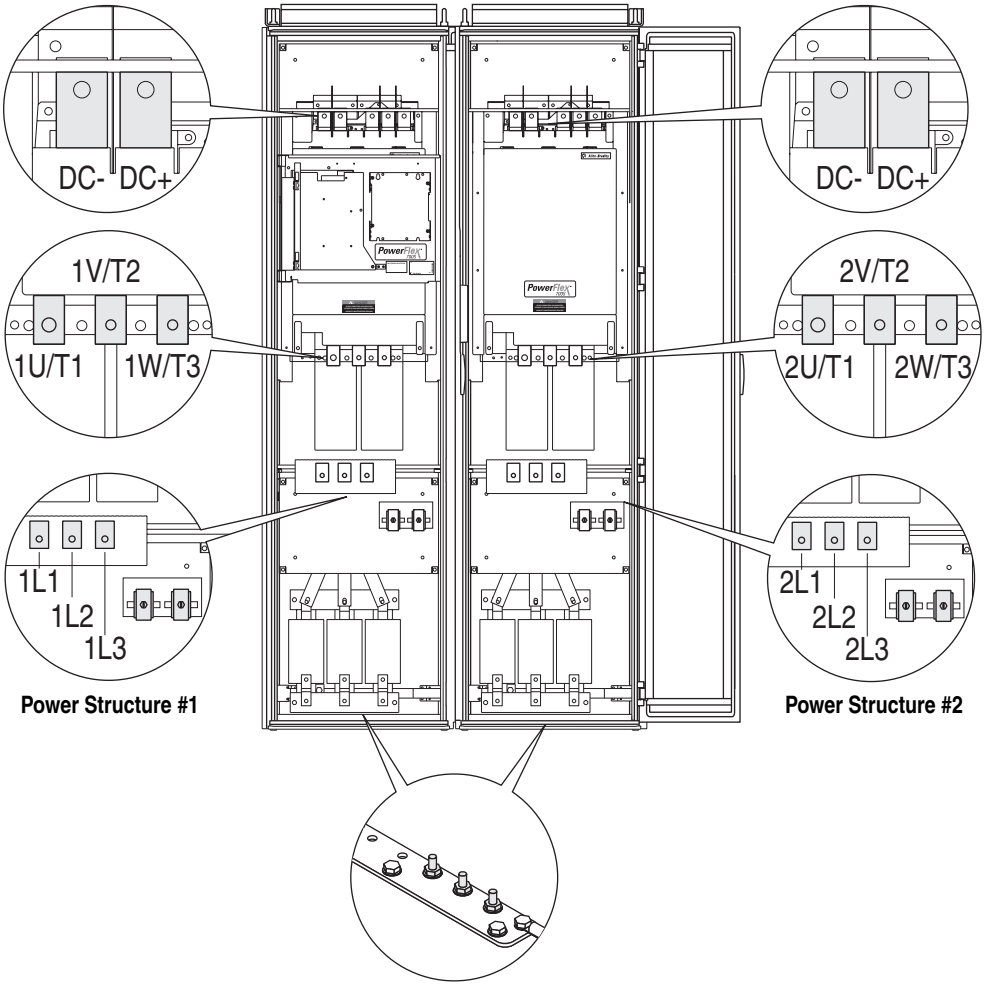

Series A Rectifier Circuit Board - Rectifier Module Tests

Table A Forward Biased Diode Tests on Rectifier Module(s)

Meter Leads		Nominal meter reading
-	+	
DC+	1L1	Meter should beep once and value should gradually rise to about 0.5V[1]
DC+	1L2	
DC+	1L3	
1L1	DC-	
1L2	DC-	
1L3	DC-	

[1] The actual voltage reading may vary depending upon your equipment. If your readings are not near 0.5V, verify that the actual voltage measured is consistent for the Rectifier module and the Output Power modules.

Table B Reverse Biased Diode Tests on Rectifier Module(s)

Meter Leads		Nominal meter reading
+	-	
1L1	DC-	Meter should display ".0L" (zero load)
1L2	DC-	
1L3	DC-	
DC+	1L1	
DC+	1L2	
DC+	1L3	

Important: If the drive fails any of these measurements, verify that all connections have been properly made for the appropriate rectifier module.

Series B Rectifier Circuit Board - Rectifier Module Tests

Table C Forward Biased Diode Tests on Rectifier Module(s)

Meter Leads		Nominal meter reading
-	+	
DC+	1L1	Meter should beep once and value should gradually rise to about 1.0 V(1)
DC+	1L2	
DC+	1L3	
1L1	DC-	The value should gradually rise to about 0.35V(2)
1L2	DC-	
1L3	DC-	

(1) The actual voltage reading may vary depending upon your equipment. If your readings are not near 1.0V, verify that the actual voltage measured is consistent for the Rectifier module and the Output Power modules.

(2) The actual voltage reading may vary depending upon your equipment. If your readings are not near 0.35V, verify that the actual voltage measured is consistent for the Rectifier module and the Output Power modules.

Table D Reverse Biased Diode Tests on Rectifier Module(s)

Meter Leads		Nominal meter reading
+	-	
1L1	DC-	Meter should display ".0L" (zero load)
1L2	DC-	
1L3	DC-	
DC+	1L1	
DC+	1L2	
DC+	1L3	

Important: If the drive fails any of these measurements, verify that all connections have been properly made for the appropriate rectifier module.

Measurement Points for Forward and Reverse Diode Tests Frame 11 Drives

Figure 9 Measurement Points for Forward and Reverse Diode Tests

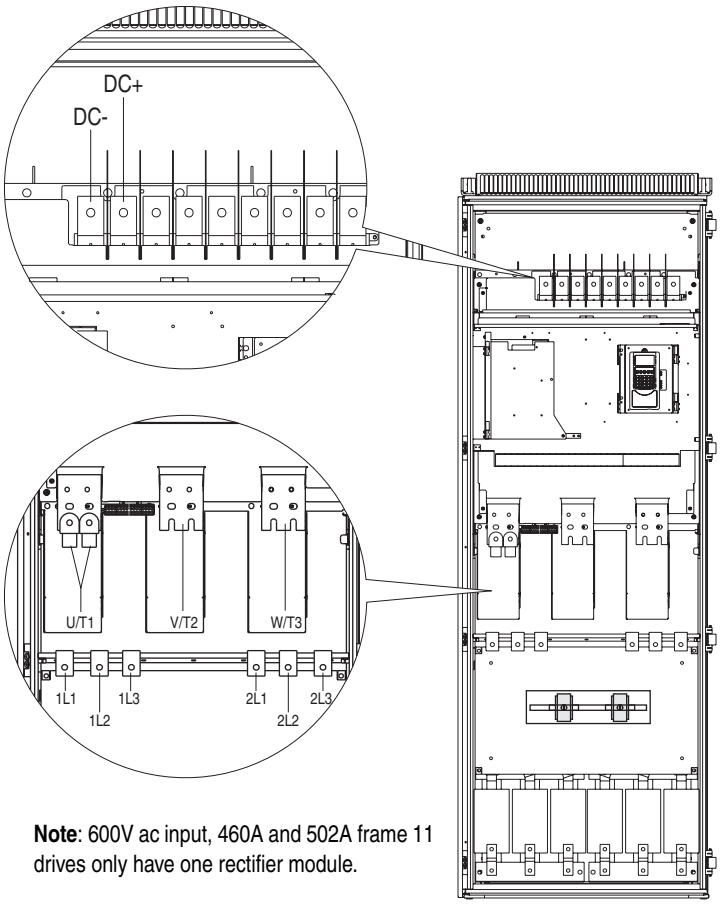

Note: 600V ac input, 460A and 502A frame 11 drives only have one rectifier module.

Series A Rectifier Circuit Board - Rectifier Module Tests

Table E Forward Biased Diode Tests on Rectifier Module(s)

Meter Leads		
+	-	Nominal meter reading
L1	DC+	The value should gradually rise to about 0.5V[(1)]
L2	DC+	
L3	DC+	
DC-	L1	
DC-	L2	
DC-	L3	

(1) The actual voltage reading may vary depending upon your equipment. If your readings are not near 0.5V, verify that the actual voltage measured is consistent for the Rectifier module(s) and the Output Power modules.

Table F Reverse Biased Diode Tests on Rectifier Module(s)

Meter Leads		Nominal meter reading
+	-	
L1	DC-	The meter should display ".0L" (zero load)
L2	DC-	
L3	DC-	
DC+	L1	
DC+	L2	
DC+	L3	

Important: If the drive fails any of these measurements, verify that all connections have been properly made for the appropriate rectifier module.

Series B Rectifier Circuit Board - Rectifier Module Tests

Table G Forward Biased Diode Tests on Rectifier Module(s)

Meter Leads		Nominal meter reading
+	-	
L1	DC+	The value should gradually rise to about 1.0V(1)
L2	DC+	
L3	DC+	
DC-	L1	The value should gradually rise to about 0.35V(2)
DC-	L2	
DC-	L3	

(1) The actual voltage reading may vary depending upon your equipment. If your readings are not near 1.0V, verify that the actual voltage measured is consistent for the Rectifier module(s) and the Output Power modules.

(2) The actual voltage reading may vary depending upon your equipment. If your readings are not near 0.35V, verify that the actual voltage measured is consistent for the Rectifier module(s) and the Output Power modules.

Table H Reverse Biased Diode Tests on Rectifier Module(s)

Meter Leads		Nominal meter reading
+	-	
L1	DC-	The meter should display ".0L" (zero load)
L2	DC-	
L3	DC-	
DC+	L1	
DC+	L2	
DC+	L3	

Important: If the drive fails any of these measurements, verify that all connections have been properly made for the appropriate rectifier module.

Step 8: Install the Protective Covers

Install the protective covers on the drive in reverse order of removal.
Refer to Step 2: Remove the Protective Covers from the Drive on page 6.

Step 9: Documenting the Change

Record the rectifier module installation on the Field Installed Option label.

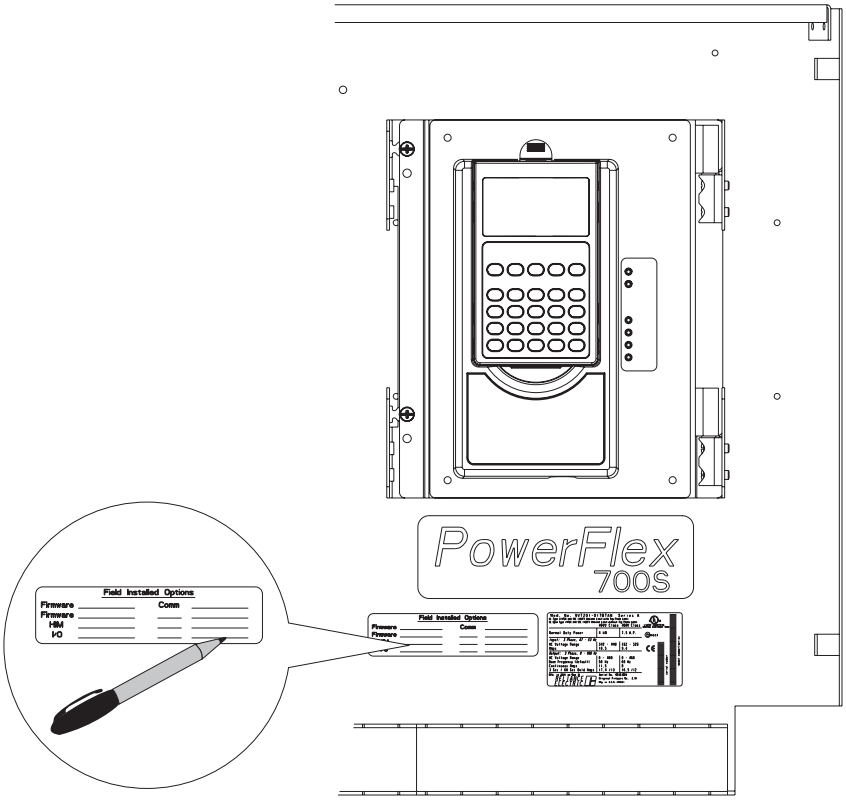

Related Documentation

Allen-Bradley publications are available on the internet at *www.rockwellautomation.com/literature*.

For	Read this document	Publication No.
Programming and troubleshooting information on PowerFlex 700H drives	PowerFlex 700H Programming Manual	20C-PM001
Programming and troubleshooting information on PowerFlex 700S Phase II drives	PowerFlex 700S with Phase II Control User Manual	20D-UM006
Information on installing Frame 9-14 PowerFlex 700H and 700S drives	Installation Instructions - PowerFlex 700H and 700S Frame 9-14 Drives	PFLEX-IN006
Information on troubleshooting and repairing PowerFlex 700H and 700S frame 10 drives	PowerFlex 700H and 700S Frame 10 Hardware Service Manual	PFLEX-TG002
Information on troubleshooting and repairing PowerFlex 700H and 700S frame 11 drives	PowerFlex 700H and 700S Frame 11 Hardware Service Manual	PFLEX-TG003
Information on troubleshooting and repairing PowerFlex 700H and 700S frame 12 drives	PowerFlex 700H and 700S Frame 12 Hardware Service Manual	PFLEX-TG004

U.S. Allen-Bradley Drives Technical Support - Tel: (1) 262.512.8176, Fax: (1) 262.512.2222, Email: support@drives.ra.rockwell.com, Online: www.ab.com/support/abdrives

www.rockwellautomation.com

Power, Control and Information Solutions Headquarters

Americas: Rockwell Automation, 1201 South Second Street, Milwaukee, WI 53204 USA, Tel: (1) 414.382.2000, Fax: (1) 414.382.4444
Europe/Middle East/Africa: Rockwell Automation, Vorstlaan/Boulevard du Souverain 36, 1170 Brussels, Belgium, Tel: (32) 2 663 0600, Fax: (32) 2 663 0640
Asia Pacific: Rockwell Automation, Level 14, Core F, Cyberport 3, 100 Cyberport Road, Hong Kong, Tel: (852) 2887 4788, Fax: (852) 2508 1846

Publication PFLEX-IN023A-EN-P – March, 2010

Copyright © 2010 Rockwell Automation, Inc. All rights reserved. Printed in USA.