Installation Instructions

Original Instructions

Allen-Bradley by ROCKWELL AUTOMATION

Kinetix MMA Asynchronous Main Motors

Catalog Numbers MMA-B080, MMA-B100, MMA-B132, MMA-B160, MMA-B180, MMA-B225

Topic	Page
Summary of Changes	2
About the Kinetix MMA Asynchronous Main Motors	3
Catalog Number Explanation	4
Before You Install the Motor	6
Functional Safety	10
Motor Feature Drawings	12
Cable and Connector Descriptions	13
Instructions to Lift	15
Motor Installation	17
Wiring the Motor Terminal Box	22
Wiring the Blower Terminal Box	26
Motor Dimensions	28
Motor Load Force Ratings	40
Motor Startup	43
Maintenance and Inspection	43
Environmental Ratings	58
Additional Resources	59

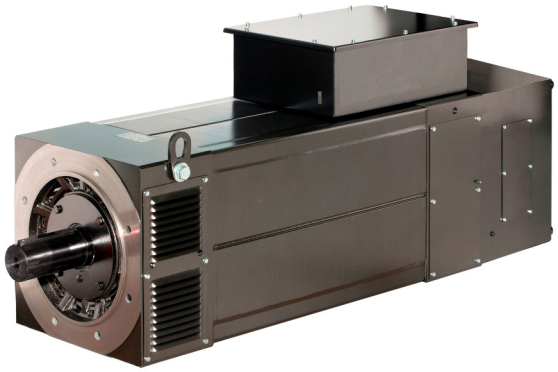

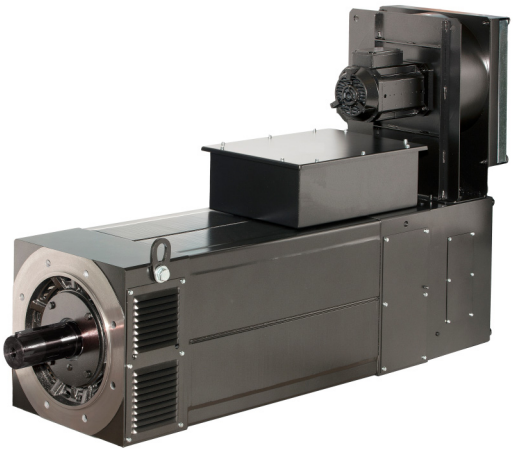

Rockwell Automation

Summary of Changes

This publication contains the following new or updated information. This list includes substantive updates only and is not intended to reflect all changes.

Topic	Page
Changed feedback connector range of motion from 180° to 330°, with some exceptions	Throughout
Changed thermostat PTO to TS	Throughout
Updated blower voltage specifications	Throughout
Replaced motor nameplate images	3
Updated Figure 1 to include dimension E and the IMPORTANT statement	7
Updated Figure 4 to include blower assembly and blower housing	12
Added footnote 1 to Safety Related Parameters	12
Updated motor power terminals to include both delta and wye	22
Updated Motor Load Force Rating tables	40
Updated Maintenance and Inspection to include all available maintenance and replacement procedures	43...57
Updated Table 59 to include shock and vibration information	58

Images that are used in this publication are examples and may not be representative of your exact motor.

About the Kinetix MMA Asynchronous Main Motors

This manual contains useful information about the installation, use, and maintenance of the Kinetix® MMA Asynchronous Main Motors. This optimized AC three-phase motor attaches to Kinetix 5700 and Kinetix 7000 drives, and is compatible with the PowerFlex® 750-series drives. The Kinetix MMA main motors are designed for applications that require the highest power and torque output across a wide range of speeds. These highly configurable motors provide continuous performance in a mechanical package with features and options that are critical for machine fit and customer success. These motors have been designed and built expressly for a variable frequency operation with inverter power supply and forced ventilation.

IMPORTANT These motors are not intended to be used with direct online operation, but are intended to be powered by three-phase inverters.

The motors are designed for use on machines and with systems that conform to the 89/392-93/68 directive. Motor startup is not permitted until conformity to the directive has been achieved.

See the Knowledge base article: Kinetix MMA Frequently Asked Questions, for additional information.

ATTENTION: To avoid personal injury and damage to the motor, do not lift or move the motor by the motor shaft, terminal box, or blower.

Some of the accessories and configurations are not covered in this manual. See the Motor Nameplate, these publications, and the Additional Resources for information.

- Kinetix Motion Control Selection Guide, publication KNX-SG001
- Kinetix Rotary Motion Specifications Technical Data, publication KNX-TD001
- Kinetix Rotary and Linear Motion Accessories, publication KNX-TD004

Motor Nameplate

All motors are equipped with a motor nameplate. Reference these labels during motor installation and commissioning. This information is only an example.

Table 1 - Motor Nameplate Descriptions (Label 1)

No.	Description	State
1	Brand Identity	Fixed
2	Catalog Number	Variable
3	Motor Description	Predefined
4	Certification, Regulatory Compliance, or Agency Marks	Fixed
5	EAN/UPC Number (crate only)	Variable
6	Manufacturing Location	Fixed
7	Material Number	Variable
8	Country Of Origin	Fixed
9	Manufacture Date	Variable
10	Serial Number	Variable
11	Series Letter	Fixed

Label 1

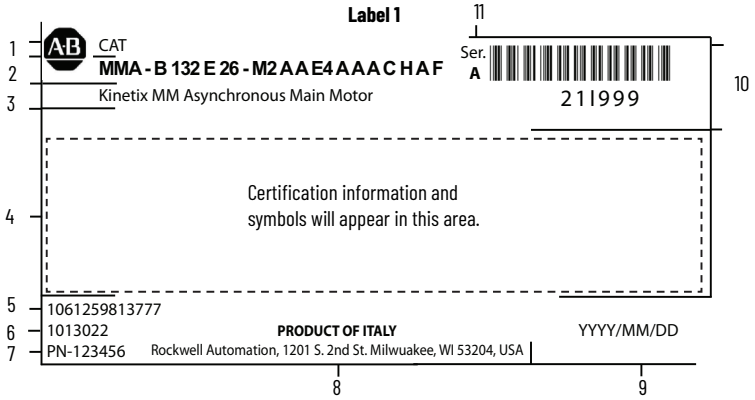

Table 2 - Motor Nameplate Technical Data (Label 2)

Label Abbreviation Description	Unit
CAT = Catalog Number	–
SER A= Series Letter	–
12A123 = Serial Number	–
Pn = Rated Power	kW
nn = Rated Speed	rpm
Mn = Continuous Stall Torque	N•m
Mpk = Peak Stall Torque	N•m
max = Max Speed	rpm
fn = Rated Frequency	Hz
Un = Rated Voltage (volts rms)	V
In = Rated Current (amps rms)	A
Io = No Load Current (1)	A

Label Abbreviation	Unit
Duty	–
PF = Power Factor	–
L f/f = Inductance (phase-to-phase)	mH
R f/f = Resistance (phase-to-phase)	Ω
wgt = Motor Weight	kg
Eff = Efficiency	%
IP = Ingress Protection	–
Icl= Insulation Class	–
Vcl = Vibration Class	–
P = Poles	–
Cooling	–
Bearings (DE or NDE) (2)	–
Feedback	–
Brake	–
QR Code = Links to rockwellautomation.com	–

Label 2

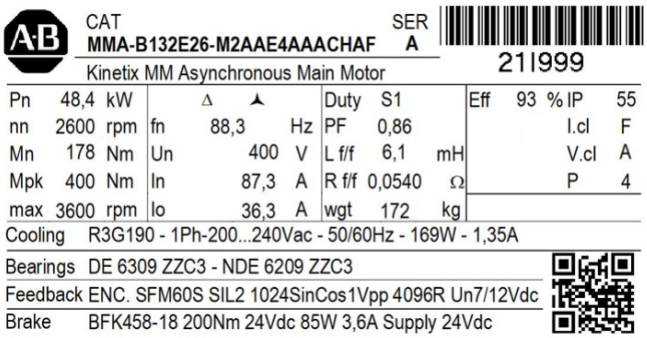

(1) Flux current or magnetizing current (amps rms).
(2) DE = drive end (shaft side); NDE = Non-drive end (blower side)

Catalog Number Explanation

MMx-x xxx x xx - xx x x xx x x x x x x x x

a b c d e f g h i j k l m n o p

MMx-x xxx x x - xx x x **xx x x x x x x x** (see Catalog Number Explanation (cont.))

(h) Terminal Box
A = Top side, right holes
B = Top side, right and left holes
C = Top side, front holes
D = Right side, bottom holes (1)
E = Right side, front holes (1)
F = Right side, rear holes (1)
G = Left side, bottom holes (1)
H = Left side, front holes (1)
J = Left side, rear holes (1)
K = Top side, right holes, reduction ring M32x1.5mm (1)
L = Top side, right holes, reduction ring M40x1.5mm (1)
M = Top side, right holes, reduction ring M50x1.5mm (2)
N = Top side, right and left holes, reduction ring M32x1.5mm (1)
P = Top side, right and left holes, reduction ring M40x1.5mm (1)
Q = Top side, right and left holes, reduction ring M50x1.5mm (2)

(g) Shaft Type *(Verify the motor torque before selecting the reduced shaft diameter option.)* (3)
A = Standard shaft keyed, A balancing degree (half key balancing)
B = Standard shaft keyed, B balancing degree (half key balancing)
C = Standard shaft keyed, A balancing degree (full key balancing)
D = Standard shaft keyed, B balancing degree (full key balancing)
E = Standard shaft smooth, A balancing degree
F = Standard shaft smooth, B balancing degree
G = Increased shaft diameter keyed, A balancing degree (half key balancing)
H = Increased shaft diameter keyed, B balancing degree (half key balancing)
J = Increased shaft diameter keyed, A balancing degree (full key balancing)
K = Increased shaft diameter keyed, B balancing degree (full key balancing)
L = Increased shaft diameter smooth, A balancing degree
M = Increased shaft diameter smooth, B balancing degree
N = Reduced shaft diameter keyed, A balancing degree (half key balancing)
P = Reduced shaft diameter keyed, B balancing degree (half key balancing)
Q = Reduced shaft diameter keyed, A balancing degree (full key balancing)
R = Reduced shaft diameter keyed, B balancing degree (full key balancing)
S = Reduced shaft diameter smooth, A balancing degree
T = Reduced shaft diameter smooth, B balancing degree

(f) Feedback Type
L2 = 2048 ppr, TTL incremental encoder
S1 = 1024 sin/cos, absolute single-turn encoder (Hiperface protocol)
S2 = 1024 sin/cos, absolute single-turn encoder, SIL 2/PLd rated (Hiperface protocol)
S3 = 2048 sin/cos, absolute single-turn encoder (EnDat protocol)
S4 = 25-bit absolute single-turn encoder (EnDat protocol)
M1 = 1024 sin/cos, absolute multi-turn encoder (Hiperface protocol)
M2 = 1024 sin/cos, absolute multi-turn encoder SIL 2/PLd rated (Hiperface protocol)
M3 = 2048 sin/cos absolute multi-turn encoder (EnDat protocol)
M4 = 25-bit absolute multi-turn encoder (EnDat protocol)

(e) Rated Speed (@ Rated V AC)
06 = 580 rpm
10 = 1000 rpm
15 = 1500 rpm
18 = 1800 rpm
22 = 2200 rpm
26 = 2600 rpm

(d) Stator Length
A, B, C, D, or E

(c) Shaft Height
080 = Shaft height 80 mm
100 = Shaft height 100 mm
132 = Shaft height 132 mm
160 = Shaft height 160 mm
180 = Shaft height 180 mm
225 = Shaft height 225 mm

(b) Voltage Class
B = 400V AC

(a) Motor Type
MMA = Asynchronous Main Motor

Lower-case letters that are shown under the catalog number indicate the catalog number position.

See the Knowledgebase article: Kinetix MMA Frequently Asked Questions, for additional information.

Use the Proposal Works online configuration tool for full catalog options and dependencies.

Note	Description
1	Not available for shaft height 80 and 100
4	Only for shaft height 80
7	Only for shaft heights 132 and 160
10	Not available for shaft height 225
13	Not available for shaft height 80

Note	Description
2	Only for shaft height 180 and 225
5	Only for shaft height 100
8	Only for shaft heights 160, 180, and 225
11	Only available for shaft height 80 and 100

Note	Description
3	See Table 47 on page 47 for compatibility
6	Only for shaft height 132
9	Only for shaft height 225
12	IC17 clean-air option cannot come cURus certified

Catalog Number Explanation (cont.)

MMx-x xxx x xx - xx x x xx x x x x x x x x
a b c d e f g h i j k l m n o p

(i) Brakes *(Maximum motor speed (rpm) is limited by the brake selection.)*
22 = No brake (standard)
C4 = Holding brake,16 N•m, 24V DC, 4000 rpm (4)
C5 = Holding brake,16 N•m, 24V DC, 4000 rpm, on/off switch (4)
C6 = Holding brake,16 N•m, 24V DC, 4000 rpm, hand-release (4)
C7 = Holding brake,16 N•m, 24V DC, 4000 rpm, hand-release, on/off switch (4)
D4 = Holding brake, 80 N•m, 24V DC, 3600 rpm (5)
D5 = Holding brake, 80 N•m, 24V DC, 3600 rpm, on/off switch (5)
D6 = Holding brake, 80 N•m, 24V DC, 3600 rpm, hand-release (5)
D7 = Holding brake, 80 N•m, 24V DC, 3600 rpm, hand-release, on/off switch (5)
E4 = Holding brake, 200 N•m, 24V DC, 3600 rpm (6)
E5 = Holding brake, 200 N•m, 24V DC, 3600 rpm, on/off switch (6)
E6 = Holding brake, 150 N•m, 24V DC, 3600 rpm, hand-release (6)
E7 = Holding brake, 150 N•m, 24V DC, 3600 rpm, hand-release, on/off switch (6)
F4 = Holding brake, 400 N•m, 24V DC, 3600 rpm (7)
F5 = Holding brake, 400 N•m, 24V DC, 3600 rpm, on/off switch (7)
F6 = Holding brake, 260 N•m, 24V DC, 3600 rpm, hand-release (7)
F7 = Holding brake, 260 N•m, 24V DC, 3600 rpm, hand-release, on/off switch (7)
G4 = Holding brake, 600 N•m, 24V DC, 3000 rpm (8)
G5 = Holding brake, 600 N•m, 24V DC, 3000 rpm, on/off switch (8)
G6 = Holding brake, 400 N•m, 24V DC, 3000 rpm, hand-release (8)
G7 = Holding brake, 400 N•m, 24V DC, 3000 rpm, hand-release, on/off switch (8)
H4 = Holding brake, 1440 N•m, 400V AC, 2300 rpm max(9)
H5 = Holding brake, 1440 N•m, 400V AC, 2300 rpm max, on/off switch(9)
J4 = Holding brake, 2400 N•m, 400V AC, 2300 rpm max (9)
J5 = Holding brake, 2400 N•m, 400V AC, 2300 rpm max, on/off switch (9)

(j) Blower
A = Axial blower 1-PH
B = Axial blower 3-PH (8)
C = Radial blower 3-PH
D = IC17 clean-air option (motor prepared without blower) (1)(12)

(k) Bearings
A = Standard deep groove ball bearing, DE and NDE
B = Deep groove ball bearings, regreasable, DE; Deep groove ball bearing, NDE (1)
C = Deep groove ball bearings, DE; Deep groove ball bearing, brush, NDE (1)
D = Deep groove ball bearings, regreasable, DE; Deep groove ball bearing, brush, NDE (1)
E = Deep groove ball bearings, DE; Ball bearing, insulated, NDE (13)
F = Deep groove ball bearings, regreasable, DE; Ball bearing, insulated NDE (1)
J = Roller bearing, regreasable, DE; Standard ball bearing, NDE
K = Roller bearing, regreasable, DE; Standard ball bearing, brush NDE (1)
L = Roller bearing, regreasable, DE; Ball bearing, insulated, NDE (13)
M = High speed bearing, DE and NDE (13)
N = High speed bearing, regreasable, DE and NDE (13)
P = High speed bearing, DE; High speed bearing, brush, NDE (13)
Q = High speed bearing, regreasable, DE; High speed bearing, brush, regreasable, NDE (13)
R = High speed bearing, DE; High speed bearing, hybrid ceramic insulated, NDE (1)
S = High speed bearing, regreasable, DE; High speed bearing, hybrid ceramic insulated, NDE (1)

(l) Flange *(Vertical mounting is not available with roller bearing option.)*
A = Standard flange
B = Standard flange, extra precise machining (10)
C = Standard flange, extra precise machining, vertical mounting (shaft facing up) (10)
D = Standard flange, vertical mounting (shaft facing up)
E = Increased dimension flange (11)
F = Increased dimension flange, extra precise machining (11)
G = Increased dimension flange, extra precise machining, vertical mounting (shaft facing up) (11)
H = Reduced dimension flange (7)
J = Reduced dimension flange, extra precise machining (7)
K = Reduced dimension flange, extra precise machining, vertical mounting (shaft facing up) (7)

(m) Certifications
A = Standard insulation system
C = cURus (UL/CSA) rated motor

(n) Protection
A = IP54 (standard)
B = IP 54, tropical windings
C = IP 55
D = IP 55, tropical windings
E = IP 55, stainless steel screws
F = IP 55, stainless steel screws, C3 anti-corrosion system
G =IP 55, stainless steel screws, C5i anti-corrosion system
H =IP 55, stainless steel screws, tropical windings
J = IP 55, stainless steel screws, C3 anti-corrosion system, tropical windings
K =IP 55, stainless steel screws, C5i anti-corrosion system, tropical windings

(o) Thermal Sensors
A = 1xTS, 1xPT1000 (standard)
B = 1xTS, 1xPT1000, 1xKTY84-130
C = 1xTS, 1xPT1000, 2xPT100 (bearing temperature) (1)
D = 1xTS, 1xPT1000, 1xKTY84-130, 2xPT100 (bearing temperature) (1)
E = 1xTS, 1xPT1000, space heater 110V AC
F = 1xTS, 1xPT1000, 1xKTY84-130, space heater 110V AC
G = 1xTS, 1xPT1000, 2xPT100 (bearing temperature), space heater 110V AC (1)
H = 1xTS, 1xPT1000, 1xKTY84-130, 2xPT100 (bearing temperature), space heater 110V AC (1)
J = 1xTS, 1xPT1000, space heater 220V AC
K = 1xTS, 1xPT1000, 1xKTY84-130, space heater 220V AC
L = 1xTS, 1xPT1000, 2xPT100 (bearing temperature), space heater 220V AC (1)
M = 1xTS, 1xPT1000, 1xKTY84-130, 2xPT100 (bearing temperature), space heater 220V AC (1)

(p) Special Options
A = No special options (standard)
B = Reinforced insulation system (1)
C = Vibrations certificate (13)
D = Aegis ring for shaft grounding
E = Reinforced insulation system, vibrations certificate (1)
F = Reinforced insulation system, vibrations certificate, Aegis ring for shaft grounding (1)

Lower-case letters that are shown under the catalog number indicate the catalog number position.

See the Knowledgebase article: Kinetix MMA Frequently Asked Questions, for additional information.

Use the Proposal Works online configuration tool for full catalog options and dependencies.

Note	Description
1	Not available for shaft height 80 and 100
4	Only for shaft height 80
7	Only for shaft heights 132 and 160
10	Not available for shaft height 225
13	Not available for shaft height 80

Note	Description
2	Only for shaft height 180 and 225
5	Only for shaft height 100
8	Only for shaft heights 160, 180, and 225
11	Only available for shaft height 80 and 100

Note	Description
3	See Table 47 on page 47 for compatibility
6	Only for shaft height 132
9	Only for shaft height 225
12	IC17 clean-air option cannot come cURus certified

Before You Install the Motor

Review all sections. Perform these steps and inspections before you begin installation.

1. Remove the motor carefully from its shipping container.
2. Inspect the motor for any damage.
3. Examine the motor frame, motor shaft, and mounting surfaces for any anomalies.
4. Notify the carrier of shipping damage immediately.
5. Verify that all components and accessories are present and undamaged.

ATTENTION: You are not permitted to disassemble the mechanical components of the motor; the exceptions are: the blower, shaft seal, and the standard encoder replacement procedures. All other motor maintenance must be performed by a Rockwell Automation authorized service center.

Prolong Motor Life

Proper installation and motor maintenance can help prolong motor life. Follow these guidelines and the Environmental Ratings on page 58 to maximize the life of a motor.

- Create a drip loop in the motor cables to carry liquids away from the motor connection.
- Whenever possible, provide shields that help protect the motor housing, shaft, seals, and their junctions from contamination.
- Shaft seals are subject to wear and require periodic inspection and replacement. Replacement is recommended every 3 months, not to exceed 12 months, depending on the use. See Shaft Seals on page 7 and Shaft Seals on page 57 for more information.
- Follow all of the topics listed in the Maintenance and Inspection section of this manual.
- Inspect the motor for damage or wear regularly. If you detect damage or excessive wear, contact Rockwell Automation Support.

In cases where the startup is not immediate, some precautions must be taken to help protect the motors during storage.

- Keep the motor in a clean and dry covered place, which is protected from possible impacts and position it horizontally. See Figure 2.
- Be sure to help protect the motor from debris that could get inside the motor or the blower.
- Do not store the motor in open spaces or wet environments.
- It is recommended to rotate the motor shaft manually every 2...3 months.

Help Prevent Electrical Noise

Electromagnetic interference (EMI), commonly called electrical noise, can reduce motor performance. Effective techniques to counter EMI include filtering the AC power, by using shielded cables, shielding the signal cables from power wiring, and the practice of good grounding techniques.

Follow these guidelines to avoid the effects of EMI:

- Isolate the power transformers or install line filters on all AC input power lines.
- Do not route motor cables over the vent openings on drives.
- Ground all equipment by using a single-point parallel ground system that employs ground busbars or large grounding straps. If necessary, use additional electrical noise reduction techniques to reduce EMI in noisy environments.

See System Design for Control of Electrical Noise Reference Manual, publication GMC-RM001, for additional information on reducing EMI.

Minimum Mounting Clearances

Install the motor in a well-aired, clean, and dry environment. Where the motor is installed inside a cabinet or similar enclosure, it is necessary to provide openings for ventilation, inspection, and maintenance. Verify that walls, sides of the machine, bins, or containers, do not impede the air circulation. Avoid having warm airflow around the motor. In cases where the installation environment is in open air, with floating particles, or other unfavorable air quality conditions, verify the risk of using the motor and determine the precautions that are necessary.

The motor dissipates heat through an auxiliary electric blower. This blower generates a constant airflow, regardless of the rotation speed of the motor. The airflow is directed through the ventilation ducts or onto the cooling fins over the entire surface of the motor's external structure (frame and covers).

IMPORTANT For the IC17 clean-air option, additional ventilation requirements exist. Follow applicable standards.

See Figure 1 for minimum mounting clearance information.

Figure 1 - Minimum Mounting Clearances

Motor Cat. No.	A mm (in.)	B mm (in.)	C mm (in.)	D mm (in.)	E mm (in.) (1)
MMA-B080*xxx*	40 (1.56)	30 (1.18)	50 (1.97)	30 (1.18)	–
MMA-B100*xxx*	50 (1.97)	40 (1.56)	70 (2.76)	40 (1.56)	–
MMA-B132*xxx*	80 (3.15)	60 (2.36)	90 (3.54)	60 (2.36)	344 (13.54)
MMA-B160*xxx*	80 (3.15)	60 (2.36)	90 (3.54)	60 (2.36)	408 (16.06)
MMA-B180*xxx*	120 (4.72)	80 (3.15)	140 (5.51)	80 (3.15)	473 (18.62)
MMA-B225*xxx*	120 (4.72)	100 (3.93)	140 (5.51)	100 (3.93)	546 (21.50)

(1) Dimension E is the required clearance to reposition a radial blower to the left or right. Dimensions C and D also apply to a repositioned radial blower.

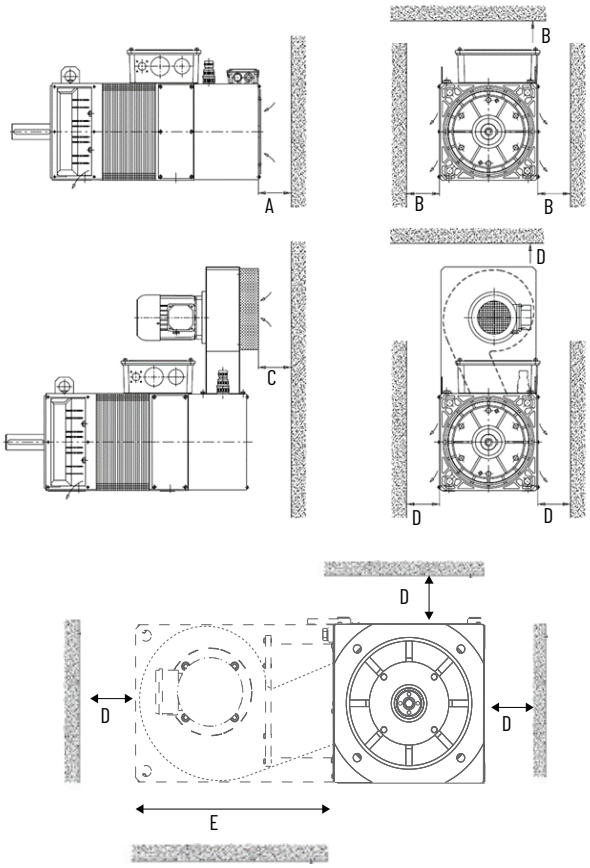

IMPORTANT Based on mounting orientation, there may be a need for modifications to the mounting clearances to access the air inlet filter, terminal box, blower, or other maintenance items.

Feedback

All Kinetix MMA main motors are supplied with an encoder at the non-drive end of the motor. See the Catalog Number Explanation for additional information. See Kinetix Rotary Motion Specifications Technical Data, publication KNX-TD001 and Kinetix Rotary and Linear Motion Accessories, publication KNX-TD004, to find environmentally sealed connectors and cables compatible with these motors. See the Knowledgebase article: Kinetix MMA Frequently Asked Questions, for additional information.

Cables

Your motor requires environmentally sealed connectors and cables as standard equipment. Motor feedback, power, and brake functions all have separate cables and are terminated in the motor terminal box. Rockwell Automation recommends a feedback cable for the Kinetix MMA main motors, but this feedback cable is ordered and shipped separately from the motor. The customer must supply their own brake and power cables. See Motor Feature Drawings, Cable and Connector Descriptions, and Wiring the Motor Terminal Box for additional information. See the Knowledgebase article: Kinetix MMA Frequently Asked Questions, for additional information.

Shaft Seals

Your motor requires a shaft seal as standard equipment. The shaft seal is required on the motor shaft, near the front motor bearing, to protect the motor from significant amounts of fine dust or fluids, such as lubrication oil from a gearbox. See Shaft Seals on page 57 for additional information.

See Environmental Ratings on page 58 or the Catalog Number Explanation and Motor Nameplate for the IP rating for your motor.

Brakes

Kinetix MMA main motors can be configured with an optional electromagnetic holding brake. Most brakes can also be configured with a hand-release or a status switch (microswitch) for additional functionality. See the Catalog Number Explanation for more information.

The brakes are spring actuated, and are suitable for use as parking/holding brake. This type of brake can be used to hold the load regardless if power is applied to the motor. The brake holding torques are designed to meet or exceed the continuous stall torque of the motor, however, some motors can develop a torque value that may exceed the holding torque capability. See Table 18 on page 25 for brake holding torques.

All electromagnetic holding brakes have two additional options, they can be equipped with brake hand-releases and status switches.

When the brake is installed, it limits the maximum speed of the motor and, in some cases, vertical installation is not allowed. Consult the motor and brake technical data sheets for the maximum allowed speed or contact Rockwell Automation Support for more details.

The hand-release is a non-standard option that can be used on all motor shaft heights, except shaft height 225 with the 400V AC control. This manually operated brake hand-release is used to assist an operator to disengage an electromagnetically charged holding brake.

See Brake Considerations on page 45 and Brake: Hand-release on page 25 for additional information.

Blower

The Kinetix MMA Asynchronous Main Motors contain a separately powered blower. There are two blower types, axial and radial, with various input voltages, as shown in Table 3.

Table 3 - Motor Blower Options (1)

Motor Cat. No.	Axial 1-PH (Blower Cat. No. A)	Axial 3-PH (Blower Cat. No. B)	Radial 3-PH (Blower Cat. No. C)
MMA-B080*xxx*	220...230V AC; 50/60 Hz	–	–
MMA-B100*xxx*	200...240V AC; 50/60 Hz	–	–
MMA-B132*xxx*		–	380...420V AC; 50/60 Hz
MMA-B160*xxx*	200...277V AC; 50/60 Hz	380...480V AC; 50/60 HZ	
MMA-B180*xxx*	–		
MMA-B225*xxx*	–		

(1) Without a blower, the IC17 clean-air option does not carry a cURus certification from the factory.

See Blower Specifications, Replacement, and Repositioning on page 48 for more information.

A motor can also be ordered without a blower, and is prepared with an adapter shroud that receives clean-air from an external source. This option is called IC17. See the Catalog Number Explanation for more information.

Thermal Sensors

Your Kinetix MMA main motor comes standard with two thermal sensors, for protection and optimal performance. A thermostat (TS) provides a normally-closed signal to the inverter, protecting the motor windings from overheating due to prolonged motor overloading or malfunction. The other thermal sensor that comes standard is a PT1000 thermistor. This sensor, which is connected to a 1756-IRT8I Logix thermal sensor module, can monitor motor winding temperature in real-time, for optimal performance and customized thermal management. Other temperature sensors are available as selectable configurations, for measuring winding or bearing temperatures.

SeeThermal Sensor and Thermal Switch Terminations on page 23 for a list of thermal sensor options and specifications.

See the Knowledgebase article: Kinetix MMA Frequently Asked Questions, for additional information.

See also Motor Feedback Connector and Cable on page 13 and the Catalog Number Explanation for additional information.

Couplings and Pulleys

Mechanical connections to the motor shaft, such as couplings and pulleys, require a torsionally rigid coupling or a reinforced timing belt. The high dynamic performance of motors can cause couplings, pulleys, or belts to loosen or slip over time. A loose or slipping connection causes system instability and can damage the motor shaft. All connections between the system and the motor shaft must be torsionally rigid to achieve acceptable response from the system. Periodically inspect connections to verify their rigidity.

When mounting couplings or pulleys to the motor shaft, verify that the connections are properly aligned and that axial and radial loads are within the specifications of the motor. See Motor Load Force Ratings on page 40 for guidelines to achieve 20,000 hours of motor bearing life.

ATTENTION: Damage can occur to the motor bearings and the feedback device if sharp impact is applied to the shaft during installation of couplings and pulleys. Damage to the feedback device can result if you apply leverage to the motor mounting flange when you remove devices that are mounted on the motor shaft.

ATTENTION: Do not strike the shaft, couplings, or pulleys with tools during installation or removal. Use a wheel puller, to apply pressure from the user end of the shaft, when attempting to remove any device from the motor shaft.

Terminal Box and Terminal Board

There are two terminal boxes: the motor terminal box and the blower terminal box. The motor terminal box has several orientation options and has options for the cable placement, using various sizes of reduction rings. The motor terminal board is mounted inside of the motor terminal box. During installation, the terminal board is accessed to connect the motor power, brake power, thermal sensors, and space heaters.

The blower terminal box is located on the blower housing and contains the blower power terminals.

See Wiring the Motor Terminal Box, Wiring the Blower Terminal Box, and the Catalog Number Explanation for additional information.

Space Heaters

Space heaters are optional equipment and provide protection against excessive moisture and condensation that forms in the motor when temperatures are lower than the dew point. The space heaters must be switched on when the motor is without power and must be switched off before motor startup. Use the heaters when the room temperature falls below 15 °C (59 °F). The use of the heater should take place at least 24 hours before starting the motor to allow time for condensation to dissipate. The space heaters can only be energized when:

- The motor is not powered.
- The ambient temperature and the degree of humidity in the air can generate condensation.
- A minimum of 24 hours before starting the motor.

WARNING: During the operation of the motor, the heaters must be switched off (not powered). Failure to disconnect the space heater before motor power is applied could result in major equipment damage or personal injury.

Mounting Orientations

The Kinetix MMA main motors have multiple mounting orientations. The orientation is limited by the motor size and bearing type. Mounting with IM B5 and V3 is not feasible for some sizes. Before any lifting or mounting operations occur, confirm the mounting orientation. For additional information, see Mounting and Table 9...Table 12.

Figure 2 - Allowed Mounting Orientations

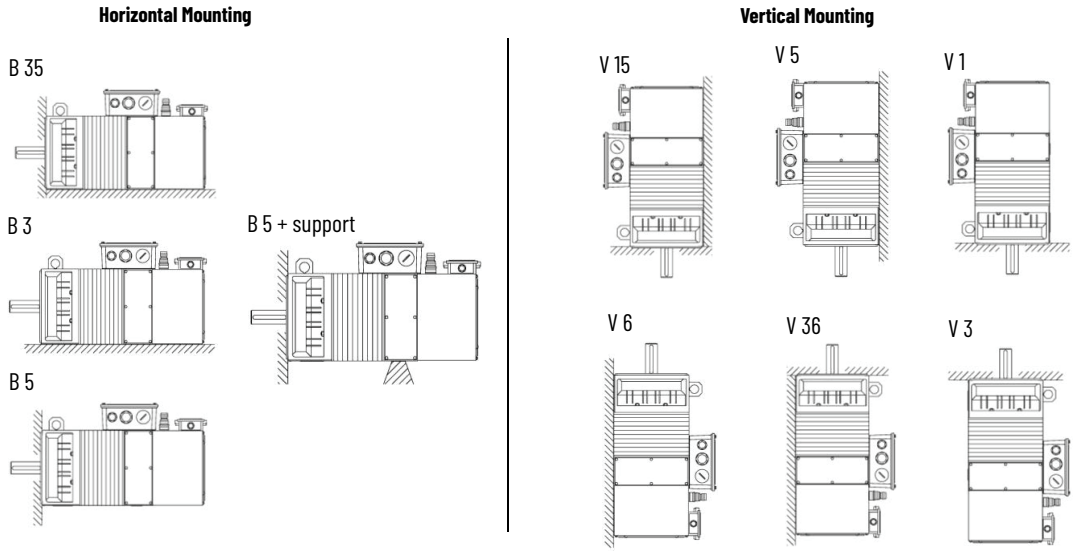

Motor Cat. No. (1)	Stator Cat. No.	Horizontal Mounting				With Shaft Down (2)			With Shaft Up (2)		
		Flange + Foot	Foot only (1)	Flange Only	Flange + Support	Flange + Foot	Foot only (1)	Flange Only	Flange + Foot	Foot only (1)	Flange Only
		B35	B3	B5	B5+Su	V15	V5	V1	V36	V6	V3
MMA-B080*xxx*	A, B, C	Yes	Yes	Yes	Yes	Yes	Yes	Yes	Yes	Yes	Yes
	D, E			No							
MMA-B100*xxx*	A, B, C			Yes							
	D, E			No							
MMA-B132*xxx*	A, B			Yes					Yes (3)	Yes (3)	Yes (3)
	C										No
	D, E			No							
MMA-B160*xxx*	A, B			Yes							Yes (3)
	C, D			No							No
MMA-B180*xxx*	A, B										Yes (3)
	C, D										No
MMA-B225*xxx*	A, B										Yes (3)
	C, D, E										No

(1) See Motor Load Force Ratings in Table 37 ...Table 39 on page 41 for permissible radial loads.
(2) Only recommended with a ball bearing. Roller bearing and high speed bearing options are not recommended. Verify maximum permissible radial load.
(3) A vertical mounting option is recommended for mounting the motor with shaft up (flange options C, D, G, K).

Functional Safety

Kinetix MMA main motors can be configured with a functional safety-rated encoder, and are designed in compliance with applicable safety standards and documentation. It is the responsibility of the customer to select and configure the Kinetix MMA main motor to meet all Functional Safety requirements, per the Kinetix Rotary Motion Specifications Technical Data, publication KNX-TD001 and the drives manuals listed in the Additional Resources. See Catalog Number Explanation on page 4 for details about each option. See Table 4 for additional information.

Table 4 - Functional Safety

Motor Cat. No.	Encoder Functional Safety Reference Documentation (SICK STEGMANN GmbH)	
MMA-B*xxxxxx*-S2 MMA-B*xxxxxx*-M2	SICK Operating Instructions: SFOS and SFM60S, SICK Document: 8021186/14HP/2019-07-04	Requirements for the evaluation of safe Hiperface motor feedback systems in connection with converts for safe electrical servo drive systems, SICK Document: 8014120

IMPORTANT The user shall implement measures and techniques to achieve proper motor blower operation or encoder operating temperature when the motor encoder is used as a part of a safety function loop. User applications might consider using MSG instruction to monitor the encoder operating temperature to satisfy this requirement. See Knowledgebase article: Retrieving Encoder Temp on a Kinetix Servo Drive.

Certification

The TÜV Rheinland group has approved Kinetix MMA Asynchronous Main Motors that are equipped with functional safety certified Hiperface encoders. Systems that include these motors can achieve a functional safety rating up to Performance Level d (PLd) and safety category 3 (CAT. 3) per ISO 13849-1, and SIL 2 per IEC 61508, IEC 61800-5-2, and IEC 62061 when used with variable-frequency drives that satisfy functional safety requirements of the specification Hiperface Motor feedback protocol (SICK Document: 8010701) and Requirements for the evaluation of safe Hiperface motor feedback systems in connection with converts for safe electrical servo drive systems (SICK Document: 8014120). To view the TÜV Rheinland certificate and other product certifications currently available from Rockwell Automation, go to rok.auto/certifications.

Important Safety Considerations

In addition to the instructions throughout this document, you are also responsible for the following:

- Complete a machine-level risk assessment.
- Certification of the machine to the desired ISO 13849-1 Performance Level or IEC 62061 SIL level.
- Project management and proof tests in accordance with IEC 61800-5-2.
- The motor feedback system must be taken out of operation or replaced no later than the encoder bearing service life or mission time is reached. See Safety Encoders on page 57 for information on safety encoder replacement.
- The motor feedback system cannot support safety functions that are based on the absolute position without additional measures. If your safety functions are based on the safe absolute position, the motor feedback system supplies only one channel without safety-related diagnostics upon power-up. You must implement a second channel by using other measures.
- The motor feedback system is not able to create a safe state for the drive system independently. The drive system creates the safe state as a response to an error displayed by the motor feedback system.
- To plan and use motors that are equipped with safety-rated encoders requires technical skills that are not explained in this document.
- The encoder supply voltage must be provided by PELV rated power supply (EN 50178). If the supply voltage is not provided by PELV rated power supply, the user must take other measures to deliver safe disconnect for live parts.
- The user must confirm that the encoder maximum operating speed and maximum angular acceleration will not exceed the limits that are listed in the Safety-related Parameters.
- The average frequency of a dangerous failure per hour (PFHd) value that is displayed in the Safety-related Parameters apply to a diagnostic degree of coverage of 90%, which must be achieved by an external drive system.

ATTENTION: To avoid damage to the equipment, do not establish or remove electrical connections to the motor feedback system with the voltage switched on.

Performance Level (PL) and Safety-Integrated Level (SIL)

For safety-related control systems, Performance Level (PL), according to ISO 13849-1, and SIL levels, according to IEC 61508 and IEC 62061, include a rating of the ability of the system to perform its safety functions. All safety-related components of the control system must be included in a risk assessment and the determination of the achieved levels.

See the ISO 13849-1, IEC 61508, and IEC 62061 standards for complete information on the requirements for PL and SIL determination.

Safety-related Parameters

Motors that are equipped with a Hiperface functional safety-rated encoder are designed to maintain the functional safety rating of the encoder attached. The safety parameters of the encoder are as follows.

Attribute	MMA-B*xxxxxx*
Safety Integrity Level (SIL)	SIL 2 (IEC 61508), SIL CL2 (IEC 62061)
Probability of a Dangerous Failure per Hour (PFHd) (1)	1.7×10^{-8}
Safety Category	CAT. 3 (ISO 13849-1)
Performance Level (PIL) (1)	PLd (ISO 13849-1)
MTTF	20 years

Attribute	MMA-B*xxxxxx*
Encoder Bearing Life (Rotation)	$3.6 \times 10^{6}9$
Encoder Mission Time	20 years
Maximum Operating Speed (2)	6000 rpm
Maximum Angular Acceleration (2)	< 500,000 rad/s^2
Operating Ambient Temperature (Encoder) (2)	-30...+85°C (-22...+185°F)

(1) The enclosure rating (in accordance with IEC 60529) is achieved with the attached mating connector and was tested with the shaft in a horizontal position.
(2) Per SFx60S operating instruction.

Motor Feature Drawings

This section depicts the different motor features and includes the naming conventions that are used throughout this manual.

Figure 3 - Motor Features with Axial Blower

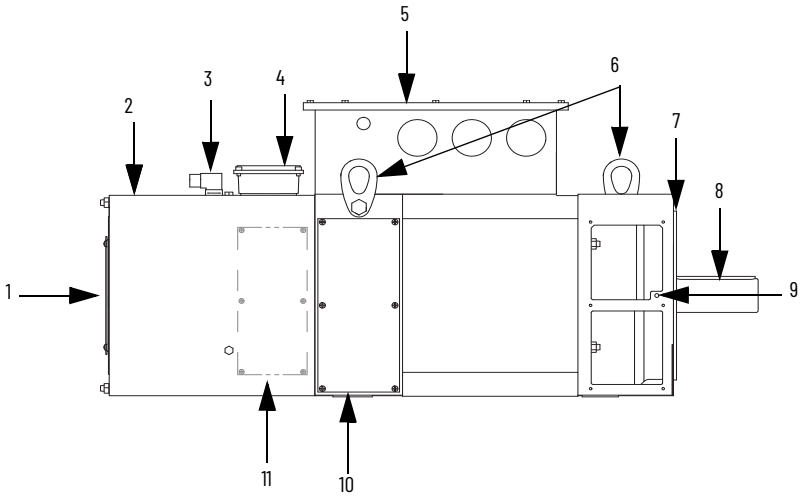

Item	Description
1	Blower Air Inlet (1)
2	Blower Housing
3	Feedback Connector
4	Blower Terminal Box
5	Motor Terminal Box
6	Factory-installed Eye Hooks
7	Flange
8	Shaft
9	Front Grease Fitting
10	Access Panel for Rear Mounting Feet (2)
11	Access Panel (3)

(1) The axial blower does not have a filter.
(2) Rear grease fitting for the bearing is located behind this panel.
(3) Only applicable to shaft height 180 and 225.

Figure 4 - Motor Features with Radial Blower

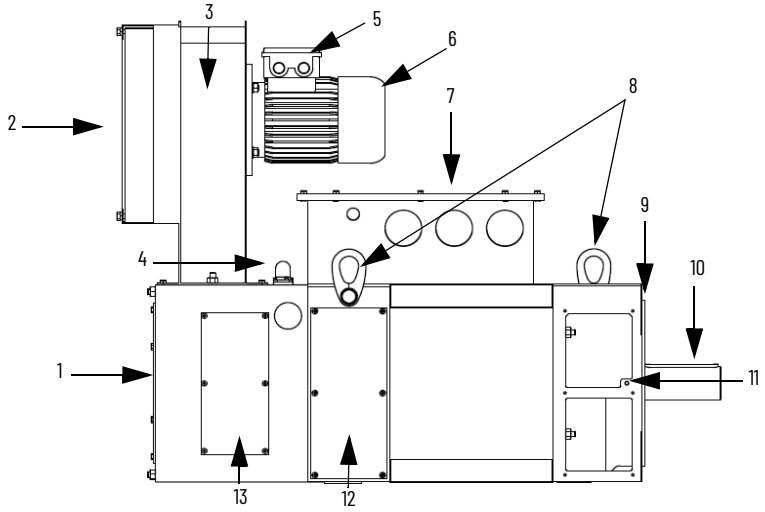

Item	Description
1	Blower Housing
2	Blower Air Inlet
3	Blower Assembly
4	Feedback Connector
5	Blower Terminal Box
6	Blower Motor
7	Motor Terminal Box
8	Factory-installed Eye Hooks
9	Flange
10	Shaft
11	Front Grease Fitting
12	Access Panel for Rear Mounting Feet (1)
13	Access Panel (2)

(1) Rear grease fitting for the bearing is located behind this panel.
(2) Only applicable to shaft height 180 and 225.

Cable and Connector Descriptions

Knowledgeable cable routing and careful cable construction improves system electromagnetic compatibility (EMC). Follow local standard cable practices regarding wire size, technology, bundling, open-tray installation, NEC code, and other guidelines. American Standards, Configurations, and Ratings: Introduction to Motor Circuit Design publication, IC-AT001 could be used as an additional reference. See the Knowledgebase article: Kinetix MMA Frequently Asked Questions, for additional information.

IMPORTANT The following factors must be considered when bulk cable is selected:

- Power cables must be rated to voltage higher than the system voltages at all operating conditions.
- Cable conductor current carrying capacity (after all applicable deratings) must be greater than or equal to the connected motor continuous rated current.
- Cables must meet all local and global regulatory requirements.
- Cable must have an overall shield to meet the applicable electromagnetic radiation/emission requirements.

ATTENTION: The overall shield on all motor and blower power cables must be properly grounded. The encoder data signal is transmitted through an impedance-matched twisted-wire pair that requires effective shielding for optimum performance. Be sure that there is an effective connection between the cable shields and the drive system ground.

To install the motor and blower power cables, observe these guidelines:

- Keep the cable lengths as short as possible.
- Ground the cable shields to help prevent EMI from affecting other equipment.
- Route signal cables away from motor and power wiring.
- Separate cables by 0.3 m (1 ft) minimum for every 9 m (30 ft) of parallel run.
- Ground both ends of the cable shield and twist the signal wire pairs to help prevent electromagnetic interference from other equipment.

BURN HAZARD: Outer surfaces of the motor can reach a high temperature during motor operation. Take precautions to help prevent accidental contact with hot surfaces. Consider motor surface temperature when you select motor connectors and cables. Failure to observe these safety procedures could result in personal injury or damage to equipment.

ATTENTION: High voltage can be present on the shields of the motor cables if the shields are not grounded. Verify that there is a connection to ground for all shields in the motor cables.

Motor Power and Brake Cables

The customer must supply motor power, brake, and accessory cables for the Kinetix MMA Asynchronous Main Motors. It is the responsibility of the customer to properly ground and terminate all connections in the terminal box. See Wiring the Motor Terminal Box for additional information on accessory terminations.

IMPORTANT The recommended wire size is based on motor current requirements and terminal board sizing. Consult your local electrical code before you select a wire gauge for your application.

ATTENTION: Unshielded power connections should not extend beyond the terminal board. Failure to observe these safety procedures could result in damage to the motor, cables, and connector components.

Motor Feedback Connector and Cable

The Kinetix 2090 feedback cables are required with all Kinetix MMA Asynchronous Main Motors. In the catalog description, MMA-*xxxxxxx*-***xx***xxxxxxxxxxx, the ***xx*** indicates the feedback type. These designators indicate if the encoder is incremental or absolute, single-turn or multi-turn, or is SIL 2 rated. See the Catalog Number Explanation for more information.

For Kinetix 5700 and Kinetix 7000 drives, existing 2090-CFBM7DF-CxAxxx feedback cables can be used to connect to the Kinetix MMA main motor. The 2090-CFBM7DF-CDAFxx feedback cable has the extra wire to manage the PT1000 thermistor signal. The 2090-CFBM7DF-CEAxxx feedback cable is also available, but does not support the PT1000 signal or the L2, S3, S4, M3, or M4 feedback types. See the Kinetix Rotary and Linear Motion Accessories, publication KNX-TD004, for Kinetix 2090 cable specifications. See Additional Resources for publications specific to your drive application.

For PowerFlex 750-series drives, the 2090-CFBM7DF-CFAFxx continuous-flex flying-lead feedback cable is designed to connect directly to the PowerFlex 750-series control board. See PowerFlex 750-Series I/O, Feedback, and Power Option Module Installation Instructions, publication 750-IN111 and Kinetix 2090 Feedback Cable for Kinetix Motors with PowerFlex 750-Series Drives, publication 2090-PC010, for additional information.

Motor Feedback Connector Pinouts

The Kinetix MMA Asynchronous Main Motors are equipped with a SpeedTec DIN feedback connector.

The Kinetix 5700 drive requires the 2198-K57CK-D15M connector kit to attach the motor to the drive. See Universal Feedback Connector Kit Installation Instructions, publication 2198-IN010, for connector kit specifications.

The Kinetix 7000 drive requires the 2090-K6CK-D15M connector kit to attach the motor to the drive. See Low-profile Connector Kits Installation Instructions, publication 2094-IN007, and EnDat Feedback Module Installation Instructions, publication 2090-IN020 for connector kit specifications.

Table 5 contains connector descriptions for the motor feedback connector. For additional information on the feedback cable, refer to Kinetix 2090 Feedback Cable for Kinetix Motors with PowerFlex 750-Series Drives, publication 2090-PC010, Kinetix 2090 Power and Feedback Cables, publication 2090-IN050, or Kinetix Rotary and Linear Motion Accessories, publication KNX-TD004.

Table 5 - Motor Feedback Connector Pinout

Motor Feedback Connector Pin	Encoder Cat. No.				Signal Description
	L2	S1, S2, M1, M2	S3, M3	S4, M4	
	VFx60	SFx60, SFx60 SIL 2	ECN413, EN0425	ECN425, EQN437	
1	A+	–	–	–	A quad B: A differential signal +
	–	SIN+	SIN+	–	1V p-p sine differential signal +
2	A-	–	–	–	A quad B: A differential signal -
	–	SIN-	SIN-	–	1V p-p sine differential signal -
3	B+	–	–	–	A quad B: B differential signal +
	–	COS+	COS+	–	1V p-p cosine differential signal +
4	B-	–	–	–	A quad B: B differential signal -
	–	COS-	COS-	–	1V p-p cosine differential signal -
5	–	DATA+	DATA+	DATA+	Serial data differential signal +
	IM+	–	–	–	Index differential signal +
6	–	DATA-	DATA-	DATA-	Serial data differential signal -
	IM-	–	–	–	Index differential signal -
7	–	–	CLK+	CLK+	Serial data clock differential signal +
8	–	–	CLK-	CLK-	Serial data clock differential signal -
9	–	–	–	–	
10	–	–	–	–	
11	EPWR 9V	EPWR 9V	EPWR 9V	EPWR 9V	9V DC encoder power
12	ECOM	ECOM	ECOM	ECOM	Encoder power common
13	TS+	TS+	TS+	TS+	Thermostat differential signal +
14	TS-	TS-	TS-	TS-	Thermostat differential signal -
15	–	–	–	–	
16	PT1	PT1	PT1	PT1	PT1000 differential signal +
17	PT2	PT2	PT2	PT2	PT1000 differential signal -

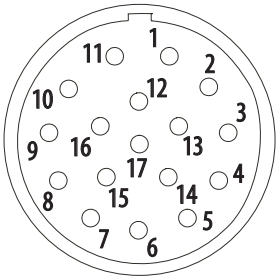

Feedback Connector on Motor

Instructions to Lift

Read these precautions before you lift the motor.

ATTENTION: All equipment and hardware that is used to lift the motor must be properly sized and rated to lift and safely hold the weight of the motor. To guard against possible personal injury or equipment damage:
- Inspect all hardware for proper attachment and use all eye hooks or lifting lugs.
- Eye hooks can unscrew during a lift. Before the lift, check the eye hooks to verify that they are tight. Attach the lift equipment to restrict movement during the lift, alternatively, lift the unit on a platform or with a sling.
- Eye hooks or lift lugs are intended to lift only the factory-produced motor and accessories.
- Do not mount additional equipment before the lift or before the motor is secured.
- Do not let any part of the motor or lift equipment contact electrically charged conductors or components.
- Do not subject the motor to high rates of acceleration, deceleration, or shock forces caused by abrupt raising, lowering, swinging, or twisting of a suspended motor during a lift.
- Help prevent personnel and their limbs from being in contact with the motor during a lift.

Eye hooks and lifting holes are installed for the handling and installation of the motor. Figure 5 depicts the location of the attachment points. It is permissible to use the flange or foot mounting holes to attach lifting lugs.

To attach lifting lugs to the rear mounting feet, remove the rear access panels.
See Install the Motor on page 20 for additional information.

Figure 5 - Lift Attachment Locations

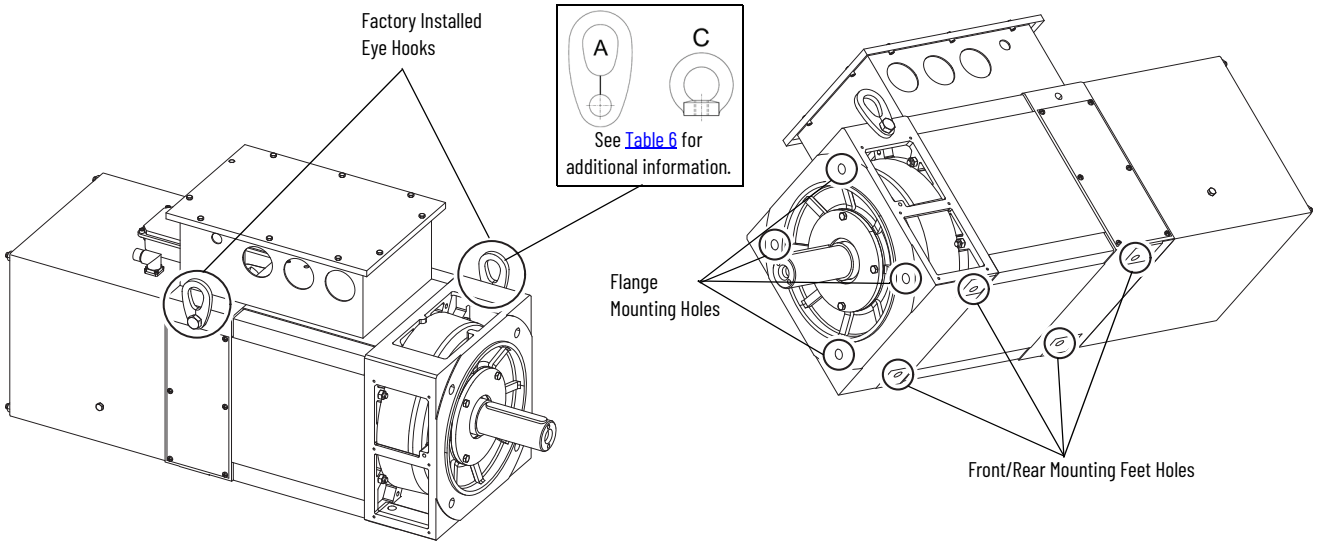

Table 6 - Eye Hook and Lifting Specifications

Motor Cat. No.	Eye Hook Type (1)	Screw	Max Motor Weight kg (lb)
MMA-B080*xxx*	C	M6	60 (132.28)
MMA-B100*xxx*		M8	100 (220.46)
MMA-B132*xxx*		M10	180 (369.83)
MMA-B160*xxx*		M12	330 (727.53)
MMA-B180*xxx*	A	M16	650 (1433.00)
MMA-B225*xxx*		M20	1320 (2910.10)

Motor Cat. No.	Rear Access Panel Screw Type	Rear Access Panel Torque N•m (lb•in)
MMA-B080*xxx*	M4	2.5 (22.13)
MMA-B100*xxx*		
MMA-B132*xxx*	M5	4.0 (35.40)
MMA-B160*xxx*		
MMA-B180*xxx*		
MMA-B225*xxx*	M6	6.0 (53.10)

(1) When using the factory installed eye hooks, always use both eye hooks to lift.

Before lifting, verify that the lifting lugs are secure, that the load is balanced, and that the cables and the lifting system are rated for the motor weight. Different lifting scenarios are needed based on the orientation of the shaft and the weight of the motor.

ATTENTION: When lifting and handling, follow all applicable local, national, and international codes, standards, regulations, or industry guidelines for safe practices. When using the factory installed eye hooks, use both eye hooks to lift. When using mounting holes, keep the load balanced and/or use all mounting holes. It is recommended that an experienced rigger is employed.

The lifting holes are sized for the motor weight. Do not use these lifting holes to lift other components or machine parts (for example: gearboxes or platforms) that are connected to the motor. Adjust the rigging lengths to compensate for any unequal weight distribution of the load. A hoist or crane, spreader bar, straps, and J-hooks with a lockable clasp capable of supporting the maximum motor weight are recommended.

See Table 6, Table 7, and Motor Dimensions to find guidance for your application.

Figure 6 - Example Lift Attachment Scenarios

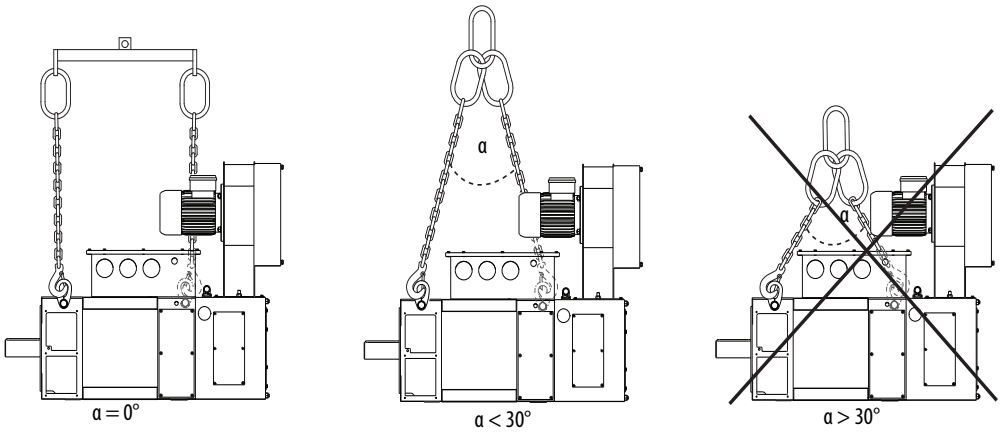

Approximate Motor Weight

The required rigging and lifting procedures that are used should take motor weight into consideration. Shipment weights and the motor catalog number can be found on the packing slip and Motor Nameplate Technical Data (Label 2) that is included with each shipment. Approximate weights are listed in Table 7.

Table 7 - Approximate Motor Weight

Motor Cat. No. (1)	Brake Weight (2) Brake Cat. No. kg (lb)	Blower Weight kg (lb)	Motor Weight kg (lb)
MMA-B080A*xx-xxxx*22*xxxxxx*	Cx 2.5 (5.5)	Axial Only 2.0 (4.4)	23.0 (50.71)
MMA-B080B*xx-xxxx*22*xxxxxx*			27.0 (59.52)
MMA-B080C*xx-xxxx*22*xxxxxx*			31.0 (68.34)
MMA-B080D*xx-xxxx*22*xxxxxx*			37.0 (81.57)
MMA-B080E*xx-xxxx*22*xxxxxx*			45.0 (99.21)
MMA-B100A*xx-xxxx*22*xxxxxx*	Dx 7.0 (15.4)	Axial Only 3.5 (7.7)	44.0 (97.00)
MMA-B100B*xx-xxxx*22*xxxxxx*			53.0 (116.85)
MMA-B100C*xx-xxxx*22*xxxxxx*			60.0 (132.27)
MMA-B100D*xx-xxxx*22*xxxxxx*			70.0 (154.32)
MMA-B100E*xx-xxxx*22*xxxxxx*			82.0 (180.78)
MMA-B132A*xx-xxxx*22*xxxxxx*	Ex 15.0 (33.1) F4, F5 22.0 (48.5)	Axial 7.0 (15.43) Radial 9.0 (19.8)	94.0 (207.24)
MMA-B132B*xx-xxxx*22*xxxxxx*			109.0 (240.30)
MMA-B132C*xx-xxxx*22*xxxxxx*			122.0 (268.96)
MMA-B132D*xx-xxxx*22*xxxxxx*			135.0 (297.62)
MMA-B132E*xx-xxxx*22*xxxxxx*			157.0 (346.13)
MMA-B160A*xx-xxxx*22*xxxxxx*	Fx 22.0 (48.5) G4, G5 33.0 (72.8)	Axial 10.0 (22.1) Radial 19.0 (41.9)	201.0 (443.13)
MMA-B160B*xx-xxxx*22*xxxxxx*			220.0 (485.02)
MMA-B160C*xx-xxxx*22*xxxxxx*			247.0 (544.54)
MMA-B160D*xx-xxxx*22*xxxxxx*			276.0 (608.48)
MMA-B180A*xx-xxxx*22*xxxxxx*	Gx 33.0 (72.8)	Axial 28.0 (61.7) Radial 32.0 (70.6)	390.0 (859.80)
MMA-B180B*xx-xxxx*22*xxxxxx*			480.0 (1058.22)
MMA-B180C*xx-xxxx*22*xxxxxx*			535.0 (1179.47)
MMA-B180D*xx-xxxx*22*xxxxxx*			580.0 (1278.68)
MMA-B225A*xx-xxxx*22*xxxxxx*	Gx 33.0 (72.8) Hx 95.0 (209.4) Jx 95.0 (209.4)	Axial 36.0 (79.4) Radial 44.0 (97.0)	730.0 (1609.37)
MMA-B225B*xx-xxxx*22*xxxxxx*			810.0 (1785.74)
MMA-B225C*xx-xxxx*22*xxxxxx*			890.0 (1962.11)
MMA-B225D*xx-xxxx*22*xxxxxx*			1020.0 (2244.72)
MMA-B225E*xx-xxxx*22*xxxxxx*			1175.0 (2590.43)

(1) To determine the total weight of the motor with the brake and the blower, you must add these three columns, based on your motor catalog selections.
(2) Unless otherwise indicated, all brake variations for a given character are available for the shaft height groups. See Catalog Number Explanation.

Motor Installation

Motor installation must comply with all local regulations and use of equipment and installation practices that promote safety and electromagnetic compatibility:

- All motors include a mounting pilot for aligning the motor to a gearbox or a machine.
- All motors include mounting feet for optional mounting. To access the rear foot mounting holes, remove the rear access panel.

ATTENTION: Unmounted motors, disconnected mechanical couplings, loose shaft keys, and disconnected cables are dangerous if power is applied. Identify (tag-out) disassembled equipment and restrict access to (lockout) the electrical power. Before you apply power to the motor, remove the shaft key and other mechanical couplings that could be thrown from the shaft.

ATTENTION: Verify that cables are installed and restrained to help prevent uneven tension or flexion at the connector. Provide support at 3 m (10 ft) intervals throughout the cable run. Excessive and uneven lateral force at the cable connector can cause the environmental seal on the connector to open and close as the cable flexes.

Feedback Connector Orientation

Kinetix MMA main motors come with an adjustable feedback connector. Feedback connectors are designed with 330° of rotational positioning, but this range may be partially or greatly reduced because of the motor and blower terminal boxes. If the connector cannot rotate to the necessary position, remove the connector from the motor and reposition the connector assembly in the needed orientation. See Rotate Feedback Connector to a New Position and Remove and Install the Feedback Connector for detailed instructions.

ATTENTION: Connectors are designed to be rotated into a fixed position during motor installation and remain in that position without further adjustment. The available range of motion is limited by the motor and blower terminal box configurations and the motor orientation. Limit the applied forces and the number of times the connector is rotated to ensure that connectors meet the International Protection (IP) rating as outlined in Environmental Ratings on page 58.

ATTENTION: When changing the orientation of the connector, use only hand-applied force to tighten. Do not apply force or pull on the cable, and do not use tools, such as pliers or vise-grips, to rotate the connector.

Mounting

This section highlights the different mounting options available for the different motor shaft heights. When mounting the motor, if necessary, insert shims under the motor feet to create a flat, even, and regular surface for the motor mount. All shims must be an appropriate material and not smaller in dimension than the underside of the motor-mounting-foot.

ATTENTION: Use the recommended self-locking screws, bolts, and washers to secure the motor. Always verify that the tools used to tighten the bolts do not interfere with or damage any part of the motor.

ATTENTION: Only qualified personnel familiar with AC three-phase asynchronous motors and associated machinery can plan or implement the installation, startup, and subsequent maintenance of the system. Failure to comply can result in personal injury and/or equipment damage.

ATTENTION: The blower screws cause a height differential between the motor and a repositioned blower. When repositioning the blower to the left or right, you may need to add a shim under the motor and level it.

Table 8 - Motor Transmissions

Pulley	Gearbox	Support
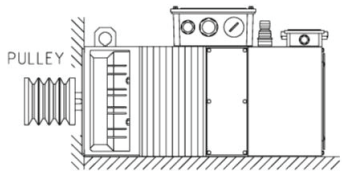	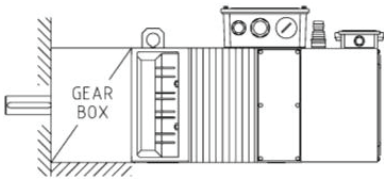	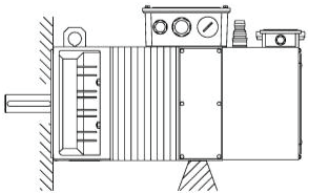
For applications with a pulley, the DE roller bearing is recommended.	For installations with a gearbox, a hollow shaft, and a non-flexible coupling, the extra-precise flange is recommended.	As an alternative to the B35 mounting.

Table 9 - Motor Transmissions with Horizontal Mounting Methods

Motor Transmission		See Table 10 for Recommended Combinations Based on Shaft Height			
		1	2	3	4
C	Coupling 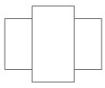	B 35 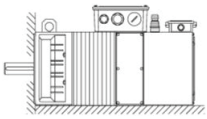	B 3 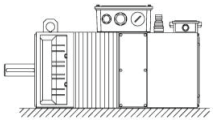	B 5 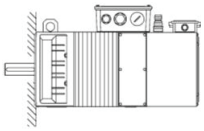	B 5 + support 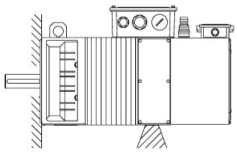
P	Pulley				

WARNING: Do not use roller bearings when using a vertical mounting method. Equipment failure is likely.

Table 10 - Horizontal Mounting Methods Based on Shaft Height and Frame Size (1)

Motor Cat. No.	See Table 9 for Combinations Based on Motor Transmissions with Horizontal Mounting Methods				
	A	B	C	D	E
MMA-B080*xxx* MMA-B100*xxx*	C1, C2, C3, C4 P1, P2, P3, P4			C1, C2, C4, P1, P4	
MMA-B132*xxx*				C1, C2, C4, P1, P2, P4	
MMA-B160*xxx*	C1, C2, C3, C4 P1, P2, P3, P4		C1, C2, C4 P1, P2, P4		
MMA-B180*xxx* MMA-B225*xxx*	C1, C2, C4 P1, P2, P4				

(1) See the Catalog Number Explanation for more information on frame size.

Table 11 - Motor Transmissions with Vertical Mounting Methods

Motor Transmission		See Table 12 for Recommended Combinations Based on Shaft Height					
		1	2	3	4	5	6
C	Coupling 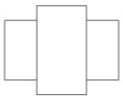	V 15 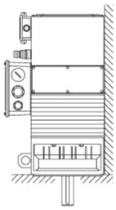	V 5 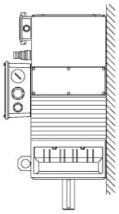	V 1 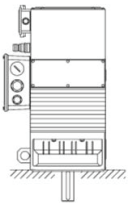	V 36 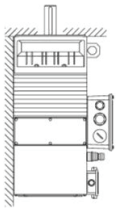	V 6 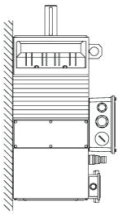	V 3 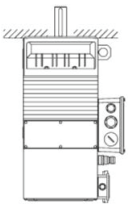
P	Pulley						

WARNING: Do not use roller bearings when using any vertical mounting method. Equipment failure is likely.

Table 12 - Vertical Mounting Methods Based on Shaft Height and Frame Size (1)

Motor Cat. No.	See Table 11 for Combinations Based on Motor Transmissions with Vertical Mounting Methods				
	A	B	C	D	E
MMA-B080*xxx* MMA-B100*xxx*	C1, C2, C3, C4, C5, C6 P1, P2, P3, P4, P5, P6				
MMA-B132*xxx* (2)	C1, C2, C3, C4, C5, C6 P1, P2, P3, P4, P5, P6		C1, C2, C3, C4, C5 P1, P2, P3, P4, P5		
MMA-B160*xxx*	C1, C2, C3, C4, C5, C6 P1, P2, P3, P4, P5, P6		C1, C2, C3, C4, C5 P1, P2, P3, P4, P5		–
MMA-B180*xxx*	C1, C2, C3, C4, C5, C6 P1, P2, P3, P4, P5, P6		C1, C2, C3, C4, C5 P1, P2, P3, P4, P5		
MMA-B225*xxx*					C1, C2, C3, C4, C5 P1, P2, P3, P4, P5

(1) See the Catalog Number Explanation for more information on frame size.
(2) For shaft height 132, 160, 180, and 225: vertical-mounting flange-option (Catalog Code: C, D, G, or K) must be selected for C4, C5, C6, and P4, P5, P6 options. Other flange options will not support these installations.

For additional information on restrictions that are related to mounting orientations, see Motor Load Force Ratings.

Some Kinetix MMA main motors can be configured with an extra precise flange options (shaft codes: B,C,F,G,H,K). Here, the concentricity of pilot diameter/perpendicularity of front flange mounting surface with respective shaft. Reference line is 10 mm from mounting flange:

- For pilot diameter sizes up to 230 mm, the standard flange precision is 0.100 mm. The extra-precise flange option is 0.050 mm.
- For pilot diameter sizes 250 mm or larger, the standard flange precision is 0.125 mm. The extra-precise flange option is 0.063 mm.

See Motor Dimensions for additional information.

Table 13 - Flange Dimension Mounting Options Summary

	Standard Size						Increased Size						Reduced Size					
Dimension	**M**	**S**	**N**	**T**	**AC**	**P**	**M**	**S**	**N**	**T**	**AC**	**P**	**M**	**S**	**N**	**T**	**AC**	**P**
Tolerance	**±0.1**	**±0.1**	**j6**	**±0.1**	**±0.5**	**±0.5**	**±0.1**	**±0.1**	**j6**	**±0.1**	**±0.5**	**±0.5**	**±0.1**	**±0.1**	**j6**	**±0.1**	**±0.5**	**±0.5**
Motor Cat. No.	**Bolt Circle Diameter**	**Mounting Hole Diameter**	**Pilot Diameter**	**Pilot Thickness**	**Flange Width (SQ)**	**Max Flange Outer Diameter**	**Bolt Circle Diameter**	**Mounting Hole Diameter**	**Pilot Diameter**	**Pilot Thickness**	**Flange Width (SQ)**	**Max Flange Outer Diameter**	**Bolt Circle Diameter**	**Mounting Hole Diameter**	**Pilot Diameter**	**Pilot Thickness**	**Flange Width (SQ)**	**Max Flange Outer Diameter**
MMA-B080*xxx*	165	12	130	3.5	158	200	215	14.5	180	4	210	250	–					
MMA-B100*xxx*	215	14.5	180	4	198	250	265	14.5	230	4	250	300						
MMA-B132*xxx*	300	18.5	250	5	262	350	–						265	14.5	230	4	262	350
MMA-B160*xxx*	350	18.5	300	5	318	400							300	18.5	250	5	318	400
MMA-B180*xxx*	350	19	300	5	360	400							–					
MMA-B225*xxx*	400	19	350	5	450	490												

ATTENTION: For foot-mounted motors, the mounting procedure requires that the access panel for the rear mounting feet be removed and then reinstalled.

Mounting with Supports or Flanges

The mount must be sturdy and solid to help prevent motor vibration and flexing. The flange is located on the forward part of the motor (drive-end side) and is provided with a pilot diameter (rabbit fit) to allow easy access. Screw/bolt holes are provided for attaching the motor to the support. For Kinetix MMA main motors, it is necessary to provide a support on the rear side of the motor to avoid flexion or deformation of the flange/shaft. See Table 9 and Table 11 for additional information.

ATTENTION: Some motors cannot be flange mount only (see Table 10 and Table 12). The length of the motor and the relative weight determines the structure flexion, vibrations, and/or noise. For this reason, these motors must use B5 plus support.

Flange-mounted motors are not acceptable in all applications because of their weight and length. See Table 10 and Table 12 for additional information.

- Use the mounting position B35 that has a support under the motor and is flange mounted.
- Use the mounting position B5 + support, as shown in Table 9 option 4.

The motor support should contain springs or compressible rubber components and should support 50% of the motor weight. Anything that supports less than 50% of the motor weight causes undue stress on the motor flange.

ATTENTION: If less than 50% of the load is supported, the motor can experience excessive flexion and vibration, which will damage the motor. That creates loading on the motor flange and shaft with respect to the bearing housing.

Install the Motor

Perform these steps to install the motor. Follow the necessary regulations and direction for the mounting orientation being used.

ATTENTION: Do not strike the shaft, couplings, or pulleys with tools during installation or removal. Damage may occur to the motor bearings and the feedback device if sharp impact to the shaft is applied during installation of couplings and pulleys. Failure to observe these procedures could result in damage to the motor and its components.

1. Provide sufficient clearance around the motor and behind the blower for heat dissipation, so that the motor stays within its specified operating temperature range. See Minimum Mounting Clearances for mounting clearance information. See Environmental Ratings on page 58 for the operating temperature range. Do not enclose the motor. Keep other devices that produce heat away from the motor.
2. To determine the radial and axial shaft load limitations, see Motor Load Force Ratings on page 40.

BURN HAZARD: Outer surfaces of the motor can reach a high temperature during motor operation. Take precautions to help prevent accidental contact with hot surfaces. Consider motor surface temperature when you select motor connectors and cables. Failure to observe these safety procedures could result in personal injury or damage to equipment.

3. If you are using the rear mounting feet, remove the rear access panels.

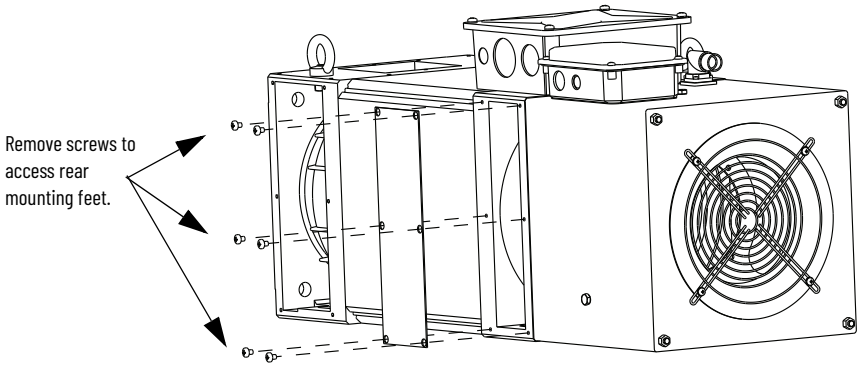

Table 14 - Rear Access Panel Torque Specifications

Motor Cat. No.	Screw Type	Torque N•m (lb•in)
MMA-B080*xxx*	M4	2.5 (22.13)
MMA-B100*xxx*		
MMA-B132*xxx*	M5	4.0 (35.40)
MMA-B160*xxx*		
MMA-B180*xxx*		
MMA-B225*xxx*	M6	6.0 (53.10)

4. Mount and align the motor.

ATTENTION: Avoid personal injury or equipment damage. Consider all applicable local, national, and international codes, standards, regulations, or industry guidelines.

ATTENTION: Only qualified personnel familiar with three-phase AC asynchronous motors and associated machinery can plan or implement the installation, startup, and subsequent maintenance of the system. Failure to comply can result in personal injury and/or equipment damage.

5. Use the screws removed in step 3 to reattach the rear access panels to the motor body.
   See Table 14 for torque values.
6. Remove the cover from the motor terminal box and terminate all accessories and options.

IMPORTANT The customer must supply motor power, brake, and accessory cables for the Kinetix MMA Asynchronous Main Motors. It is the responsibility of the customer to properly ground and terminate all connections in the terminal box. The recommended wire size is based on motor current requirements and terminal board sizing. Consult your local electrical code before you select the wire gauge for your application.

   a. Wire the motor power, see Motor Power Terminations on page 23.
   b. Wire the thermal sensors and thermal switches, see Thermal Sensor and Thermal Switch Terminations on page 23.
   c. If applicable wire the brake, see Brake Terminations on page 24.
   d. If applicable wire the space heater, see Space Heater Terminations on page 26.
7. After all accessories and options have been terminated, reattach the motor terminal box cover.
   Torque screws to hand-tight.
8. If applicable, terminate the wires in the blower terminal box, see Wiring the Blower Terminal Box on page 26.

IMPORTANT Before closing the motor and blower terminal boxes, it is necessary to verify that:
- The connections have been implemented according to the supplied schematics and drawings.
- All screws and terminations are secured.
- The terminal box interiors are clean and there is no debris, including loose wire or metal pieces.
- Unused cable glands have been removed and replaced with plugs.
- Any applicable gaskets have been reinstalled.

9. After the blower is connected, reattach the blower terminal box cover.
   Torque screws to hand-tight.
10. If necessary, rotate or reposition the connector.
    See Feedback Cable and Motor Feedback Connector: Replacement or Rotation for additional information.

IMPORTANT The MMA-B080*xxx* feedback connector does not allow for reorientation of the connector. For information to change the orientation of the MMA-B080*xxx*, see Remove and Install the Feedback Connector.

11. Connect the feedback cable.

Wiring the Motor Terminal Box

The motor terminal board has three or six pins to connect the Kinetix MMA main motor windings. Additional terminals are available for the connection of the thermal protections and other accessories. See the Knowledgebase article: Kinetix MMA Frequently Asked Questions, for additional information.

IMPORTANT The customer must supply motor power, brake, and accessory cables for the Kinetix MMA Asynchronous Main Motors. It is the responsibility of the customer to properly ground and terminate all connections in the terminal boxes. The recommended wire size is based on motor current requirements and terminal board sizing. Consult your local electrical code before you select the wire gauge for your application.

Figure 7 - Motor Terminal Board Configurations

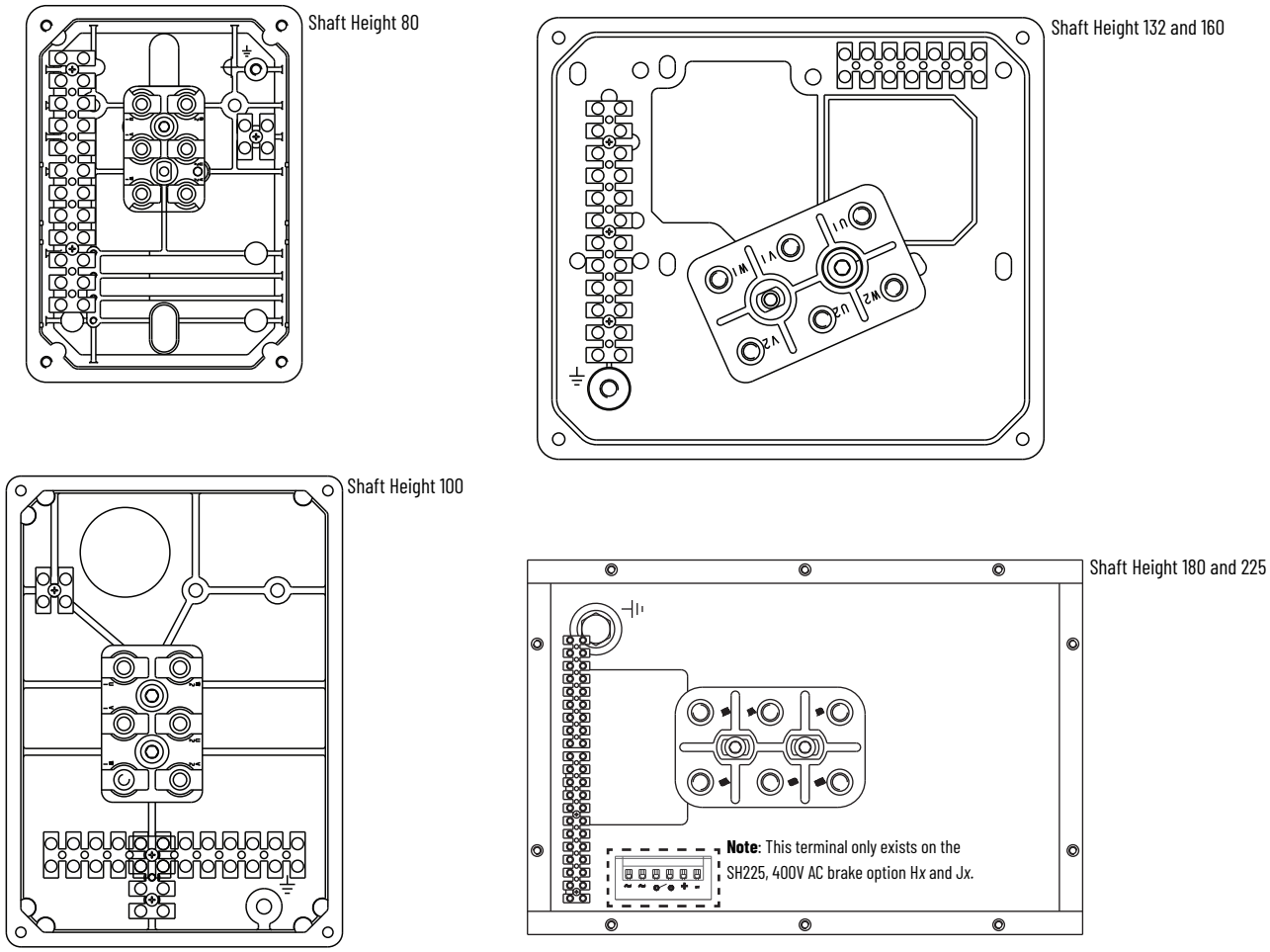

Table 15 - Possible Motor Terminal Board Terminations and Definitions

Label	Description
U1, V1, W1	Incoming power connections
U2, V2, W2	Existing power connections
Heater	Option: space heater
Brake	Brake power and control
Brake Status (microswitch)	NC - normally closed NO - normally open COM - common

Label	Description (1)
TS	Thermostat for winding overheating protection
PT1000 Winding	RTD for real-time winding temperature measurements
PT100 Front Bearing	RTD embedded in front bearing for real-time temperature measurements
PT100 Rear Bearing	RTD embedded in rear bearing for real-time temperature measurements
KTY 84-130	RTD embedded in the windings and is used in place of the PT1000

(1) Resistive temperature device (RTD).

Motor Power Terminations

The customer must provide their own motor power cables. Follow your local guidelines and regulations for sizing and applications. See the Knowledgebase article: Kinetix MMA Frequently Asked Questions, for additional information.

ATTENTION: Hazard of personal injury or equipment damage is possible. Consider all applicable local, national, and international codes, standards, regulations, or industry guidelines.

IMPORTANT The following factors must be considered when bulk cable is selected:

- Power cables must be rated to voltage higher than the system voltages at all operating conditions.
- Cable conductor current carrying capacity (after all applicable deratings) must be greater than or equal to the connected motor continuous rated current.
- Cables must meet all local and global regulatory requirements.
- Cable must have overall shield to meet the applicable electromagnetic radiation/emission requirements

1. Attach incoming power (U, V, and W) to their corresponding terminals.

Figure 8 - Motor Power Terminal Board

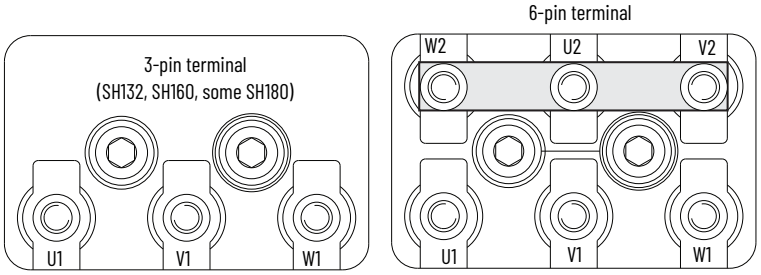

IMPORTANT Motor power ratings are based on a star configuration.

Use of the star configuration for motor power wiring is recommended.

2. Attach the ground wire to the ground lug. See Figure 7 for ground lug location based on shaft height.

- The size and shape of the power terminal strip may vary based on the motor size.
- If applicable, form a drip loop in the cables to carry liquids away from the connectors.
- If using conduit, make sure that condensation will drip away from the connectors and terminal box.

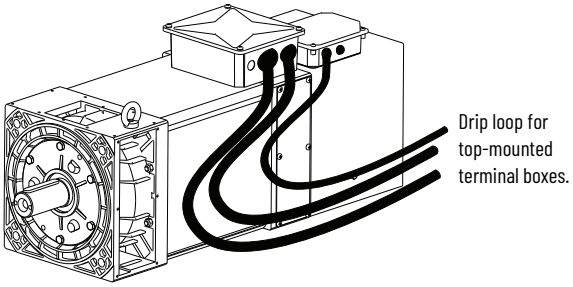

Thermal Sensor and Thermal Switch Terminations

If you have thermal sensors, you must consult the drive manual for additional information. All Kinetix MMA main motors come standard with two thermal sensors, but also have the option for additional thermal sensors. However, not all thermal sensors are supported by Kinetix drives. A 1756-IRT8I Logix thermal sensor module or similar may be required to receive and read these signals. The TS thermostat does not provide the actual working temperature, but only provides a signal that indicates whether the temperature is within or over the preset limit. If the TS thermostat is not properly connected, the warranty on the product is voided. Additional wiring needs to be considered. See Additional Resources for the list of drive manuals.

See the Knowledgebase article: Kinetix MMA Frequently Asked Questions, for additional information.

ATTENTION: Create a manual reset or a specific routine in the PLC software to avoid an automatic motor restart following a high-temperature warning from the thermal protection system. Do not conduct the high-voltage test on the thermal protector terminals. RTD provides real temperature data and may need to be connected to a controller if there is not drive support.

Table 16 - Thermal Sensors and Thermal Switch Specifications

Description	TS (1)	KTY 84-130, PT100, or PT1000 (2)	Terminal Board Layout
Type of protection	Slow overload, insufficient ventilation	Temperature monitoring	
Temperature measure	No	Yes	
Type of signal	Normally closed contact	Linear variable resistance	
Intervention temperature	150 °C (302 °F)	–	
Resistance at 20 °C (68 °F)	< 1 Ω	See Table 17	
Resistance at the intervention temperature	< 1 Ω	See Table 17	
Resistance after the intervention	∞	See Table 17	
Rated supply voltage	110V AC	–	
Maximum supply voltage	250V AC / 60V DC	–	
Maximum current	AC = 2.5 A / DC = 1 A	2 mA	
Reset temperature	85...95 °C (185...203 °F)	–	
	TS (Thermal Switch) 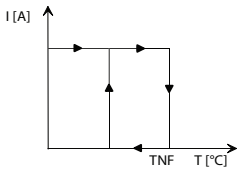	KTY – PT100 – PT1000 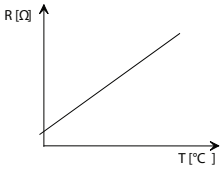	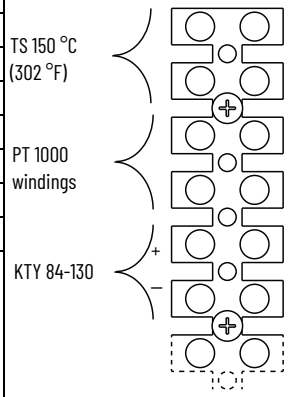

(1) The TS is the thermostat.
(2) Resistive temperature device (RTD).

Table 17 - Thermal Sensor Temperature and Resistance Values

Temperature °C (°F)	PT100 Ω	PT1000 Ω	KTY 84-130 Ω
-20 (-4)	92.16	921	419
-10 (14)	96.09	960	455
0 (32)	100.00	1000	493
10 (50)	103.90	1039	533
20 (68)	107.79	1078	576
30 (86)	111.67	1117	621
40 (104)	115.54	1155	668
50 (122)	119.40	1194	718
60 (140)	123.24	1232	769
70 (158)	127.07	1271	824

Temperature °C (°F)	PT100 Ω	PT1000 Ω	KTY 84-130 Ω
80 (176)	130.89	1309	880
90 (194)	134.70	1347	939
100 (212)	138.50	1385	1000
110 (230)	142.29	1423	1063
120 (248)	146.06	1461	1129
130 (266)	149.82	1498	1198
140 (284)	153.58	1536	1268
150 (302)	157.31	1573	1340
160 (320)	161.04	1610	1415
170 (338)	164.76	1647	1493
180 (356)	168.46	1685	1572

Brake Terminations

The brake configuration and option for each motor varies. The standard motor configuration is to have no brake. The brake can be fitted with a microswitch to monitor brake status release or engagement. The microswitch can be wired on the motor terminal strip as a normally closed contact or a normally open contact. The brake microswitch leads must be landed on the motor terminal strip.

The deceleration/braking of the system must be done dynamically through the inverter. The holding brake is only suitable to keep the shaft locked during cycle pauses and to be activated when the motor has stopped turning. Do not repeatedly use the brake during the machine cycle or to reduce the deceleration time of the system.

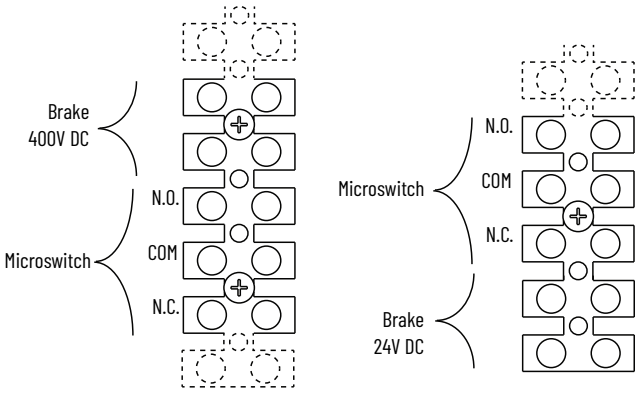

Table 18 - Brake Voltage, Power, Speed, and Holding Torque

Motor Cat. No.	Brake Cat. No.	Holding Torque (N•m)	Holding Torque with Hand-release Feature (N•m)	Rated Supply Voltage (+/- 10% tolerance)	Power (Watts)	Maximum Allowable Speed (rpm)
MMA-B080*xxx*	C4, C5, C6, C7	16 N•m	No reduction	24V DC	30	4000
MMA-B100*xxx*	D4, D5, D6, D7	80 N•m	No reduction	24V DC	50	3600
MMA-B132*xxx*	E4, E5, E6, E7	200 N•m (1)	150 N•m (1)	24V DC	85	3600
MMA-B132*xxx* MMA-B160*xxx*	F4, F5, F6, F7	400 N•m (1)	260 N•m (1)	24V DC	100	3600
MMA-B160*xxx* MMA-B180*xxx* MMA-B225*xxx*	G4, G5, G6, G7	600 N•m (1)	400 N•m (1)	24V DC	110	3000
MMA-B225*xxx*	H4, H5	1440 N•m	Hand-release not available	400V AC	920 Release 230 Holding	2300
MMA-B225*xxx*	J4, J5	2400 N•m	Hand-release not available	400V AC	920 Release 230 Holding	2300

(1) For brake options E, F, and G, options *x*4 and *x*5 have a holding torque and options *x*6 and *x*7 have a slightly reduced holding torque because of the added hand-release feature.

Brake: Hand-release

The brake hand-release is an additional option that is available for all shaft heights except for shaft height 225 with 400V AC coil brake. The hand-release feature provides the user the ability to disengage the brake from holding the rotor without the need to electrically energize the brake. When installed the brake hand-release has an operational range of 10° of the installed/neutral position.

IMPORTANT The brake hand-release is shipped unattached and must be connected to the motor during installation. See Figure 9 for information on the location of the brake hand-release.

Figure 9 - Brake Hand-release Location

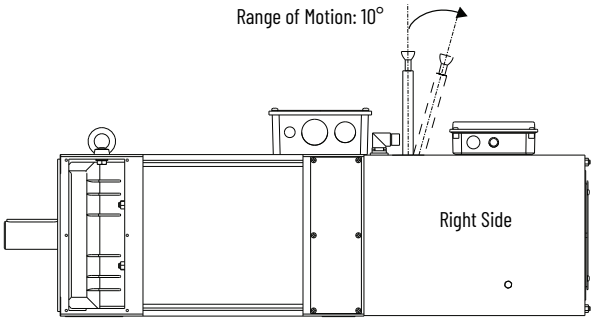

Motor Cat. No.	Hand-release Position
MMA-B080*xxx*	Top Side
MMA-B100*xxx*	Top Side
MMA-B132*xxx*	Right Side
MMA-B160*xxx*	Right Side
MMA-B180*xxx*	Right Side
MMA-B225*xxx*	Right Side

Install the Brake Hand-release

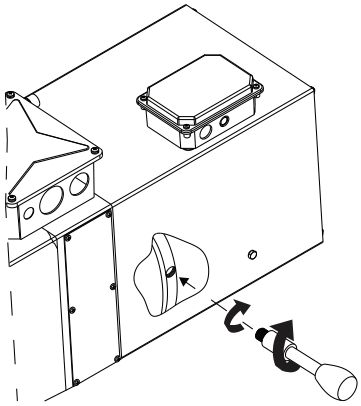

The brake hand-release installs into an opening on the top or right side of the motor blower. See Figure 9 for the location.

1. Locate the mounting hole on the motor blower.
2. To access the mounting threads, spread the rubber gasket.
3. Verify that the foam washer is attached to the hand-release bolt.
4. Attach the brake hand-release to the motor and hand-tighten.

Operate the Brake Hand-release

The brake hand-release is not electrically wired to the motor or blower terminal boxes. It is a manually operated mechanical brake release. This allows the operators to provide slight movements while the holding brake is applied.

1. When installed, the brake hand-release is in the neutral position and has the holding brake engaged.
2. To disengage the holding brake, move the brake hand-release lever 10° and hold it in that position.
   This allows a second operator to move the machinery with reasonable effort.
   Over time, as the brake is used, the brake pad will wear. This wear changes the amount of force that is needed to release the brake.
3. To reengage the holding brake, release the brake hand-release lever. The spring force returns the brake hand-release to the neutral position.
   It is recommended to remove the brake hand-release lever in between uses.

Space Heater Terminations

Space heaters provide protection against excessive moisture and condensation that could form in the motor when temperatures are lower than the dew point. Motors that are equipped with an optional space heater, are connected to the terminal strip, in the motor terminal box.

ATTENTION: During the operation of the motor, the heaters must be switched off (not powered).

Using the Space Heater

General guidance for space heater use:

- The motor must be powered off.
- The ambient temperature and the degree of humidity in the air has the possibility to generate condensation.
- The ambient temperature is below 15°C (59°F), typically run space heater for 4...12 hrs.
- Use the space heater within 24 hours before the motor startup.
- Turn off the space heater before performing motor startup procedures.
- It is recommended to wire a contactor or manual switch to control space heater power.
  A switch allows the power to be turned on/off without disconnecting wires from the motor terminal board.

To determine which voltage to apply to the space heater see the Catalog Number Explanation (cont.) on page 5 and the Motor Nameplate. Thermal sensors with catalog numbers E...H are 110V AC; catalog numbers J...M are 220V AC.

Space heater terminations have a protective cover that is securely attached to the terminals to help prevent accidental user contact with high voltage. Space heater terminations are labeled with the appropriate voltage and wattage of the installed motor heater.

Table 19 - Space Heater Specifications

Motor Cat. No.	Power (Watts)	Thermal Sensor Cat. No.	Terminal Board Layout
MMA-B080*xxx*	30	E...M (1)	Space heater (SH80-SH100) 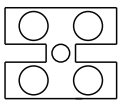
MMA-B100*xxx*	30		
MMA-B132*xxx*	40		Space heater (SH132-SH225) 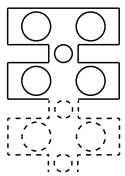
MMA-B160*xxx*	50		
MMA-B180*xxx*	60		
MMA-B225*xxx*	70		

(1) Thermal sensors with catalog numbers E...H are 110V AC; catalog numbers J...M are 220V AC.

Wiring the Blower Terminal Box

Follow these instructions to wire the blower terminal box. See Blower Specifications, Replacement, and Repositioning on page 48 for more blower information and wiring diagrams.

WARNING: Hazard of personal injury or equipment damage is possible. Consider all applicable local, national, and international codes, standards, regulations, or industry guidelines.

ATTENTION: Check that the cables are well tightened to the terminal board. Appropriately size and tighten wire terminals. Failure to do so can cause operating irregularities and overheating on the conductor and the terminal board, with consequent danger or damage to the plant and to the motor. Follow the instructions pertaining to the electromagnetic compatibility and to the type of cable to use, as supplied by the inverter manufacturer.

1. If you removed the blower assembly during motor installation or mounting, reattach the blower subassembly.
   See Blower Specifications, Replacement, and Repositioning on page 48 for instructions and additional blower specifications.

2. Wire the blower assembly. See Table 20 based on your blower type.

Table 20 - Blower Wiring Specifications

1-PH 200...240V AC; 50/60 Hz Axial Blower SH80...SH132 (1)

Terminal	Connection	Description
L/L1	Line 1	Phase
N/L2	Neutral/Line 2	Neutral
⏚	Earth Ground	PE/Ground Symbol

1-PH 200...277V AC; 50/60 Hz Axial Blower SH160

Terminal	Connection	Description
L/L1/U1	Line 1	Phase
N/L2/V1	Neutral/Line 2	Neutral
⏚	Earth Ground	PE/Ground Symbol

3-PH 380...480V AC; 50/60 Hz Axial Blower SH160...SH225

Terminal	Connection	Description
L1/U1	Line 1	Phase
L2/V1	Line 2	Phase
L3/W1	Line 3	Phase
⏚	Earth Ground	Ground Symbol

3-PH 380...420V AC; 50 Hz / 440...480V AC; 60 Hz Radial Blower SH132...SH225

Terminal	Connection	Description
L1/U1	Line 1	Phase
L2/V1	Line 2	Phase
L3/W1	Line 3	Phase
⏚	Earth Ground	Ground Symbol

(1) The voltage range for SH80 is 220...230V AC; for SH100 and SH132 it is 200...240V AC.

3. If applicable, install the blower filters. See Replace, Inspect, and Maintain Blower Filters on page 49 for instructions and additional information.

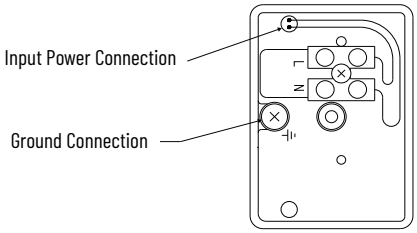

1-PH 200...240V AC; 50/60 Hz Axial Blower SH80...SH132 Terminal Box

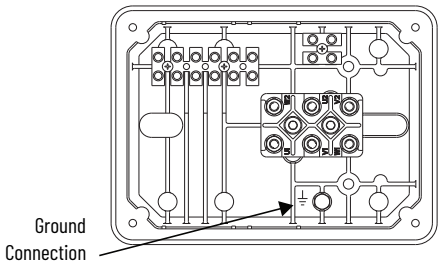

1-PH 200...277V AC; 50/60 Hz Axial Blower SH160 Terminal Box
(Only connect U1 and V1 for the power supply)

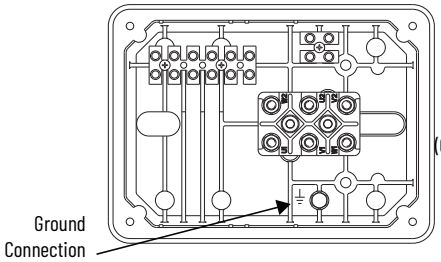

3-PH 380...480V AC; 50/60 Hz Axial Blower SH160...SH225 Terminal Box
(Only connect U1, V1, and W1 for the power supply)

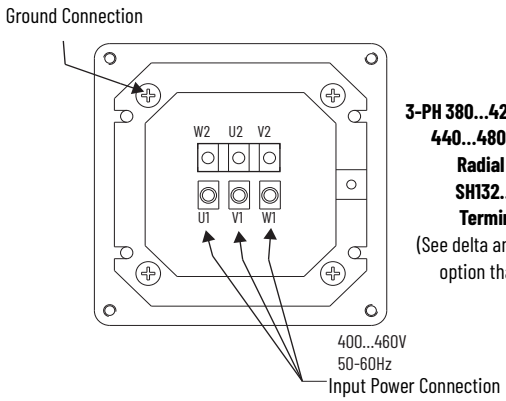

3-PH 380...420V AC; 50Hz / 440...480V AC; 60Hz Radial Blower SH132...SH225 Terminal Box
(See delta and wye wiring option that follows)

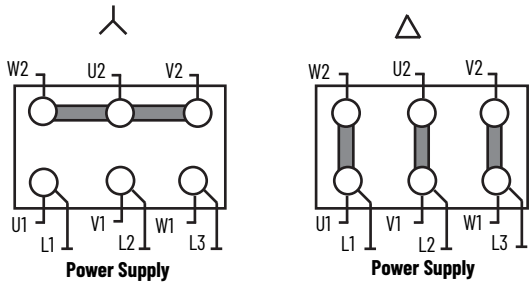

Motor Dimensions

Figure 10 - MMA-B080xxx Motor Dimensions

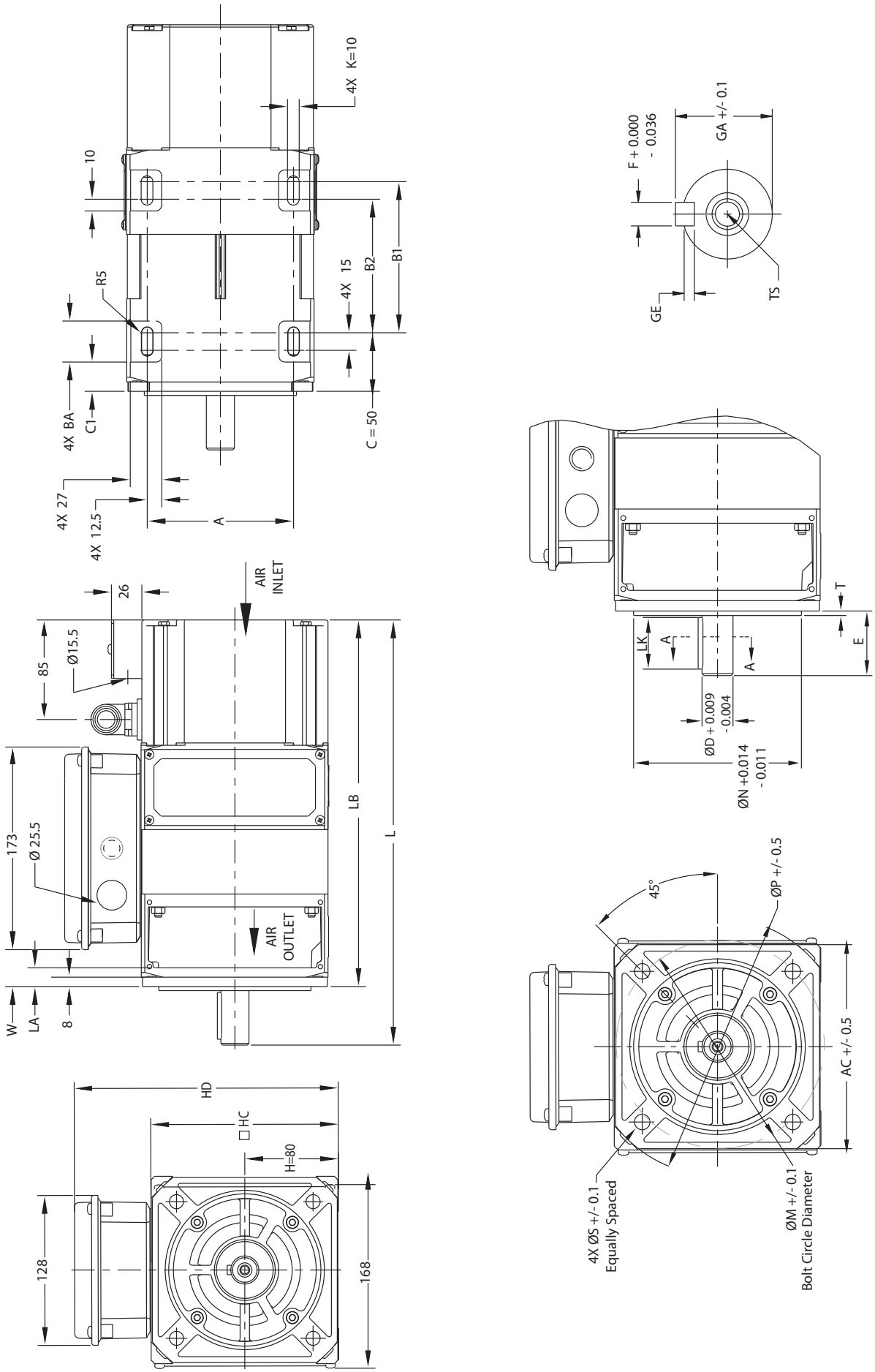

Table 21 - MMA-B080*xxx* Motor Dimensions

Motor Cat. No.	A mm (in.)	B2 mm (in.)	B1 mm (in.)	BA mm (in.)	C1 mm (in.)	L (1) (2) (3) mm (in.)	LA mm (in.)	LB (1) (2) (4) mm (in.)	W (2) (4) mm (in.)	H mm (in.)	HC mm (in.)	HD mm (in.)	K mm (in.)
MMA-B080A*xx*	125 (4.92)	114 (4.49)	129 (5.08)	35 (1.38)	25 (0.98)	365 (14.37)	16 (0.63)	315 (12.40)	31 (1.22)	80 (3.15)	160 (6.30)	225 (8.86)	10 (0.39)
MMA-B080B*xx*		139 (5.47)	154 (6.06)			390 (15.35)		340 (13.39)	56 (2.20)				
MMA-B080C*xx*		164 (6.46)	179 (7.04)			425 (16.73)		365 (14.37)	81 (3.19)				
MMA-B080D*xx*		204 (8.03)	219 (8.62)			465 (18.31)		405 (15.94)	121 (4.76)				
MMA-B080E*xx*		259 (10.20)	274 (10.79)			520 (20.47)		460 (18.11)	176 (6.93)				

(1) For all motors except those with no holding brake, catalog option (MMA-B080*xxx-xxxx*22*xxxxxxx*) add 80 mm (3.15 in.) to dimension L and LB.
(2) For shaft options check shaft and key dimension table.
(3) When the reduced shaft option is selected (Shaft Codes: N, P, Q, R, S, T) length L is reduced by 10 mm (0.39 in.).
(4) When the increased flange option is selected (Flange Codes: E, F, G) dimension LB, C, and W increases by 10 mm (0.39 in.).

Table 22 - MMA-B080*xxx* Shaft Dimensions

Motor Cat. No.	Shaft Cat. No.	Key Width [F] mm (in.)	Shaft Width Over Key [GA] mm (in.)	Depth of Keyway [GE] mm (in.)	Key Length [LK] mm (in.)	Diameter [D] mm (in.)	Shaft Height [E] (1) mm (in.)	Thread Size [TS]
MMA-B080A*xx* MMA-B080B*xx*	A, B, C, D	8 (0.31)	27 (1.06)	4 (0.16)	40 (1.57)	24 (0.94)	50 (1.97)	M8
	E, F	–						
MMA-B080C*xx* MMA-B080D*xx* MMA-B080E*xx*	A, B, C, D	8 (0.31)	31 (1.22)	4 (0.16)	50 (1.97)	28 (1.10)	60 (2.36)	M10
	E, F	–						
MMA-B080C*xx*	N, P, Q, R	8 (0.31)	27 (1.06)	4 (0.16)	40 (1.57)	24 (0.94)	50 (1.97)	M8
	S, T	–						

(1) When increased dimension flange option is selected (Flange Codes: E, F, G), the length of the shaft reduces by 10 mm (0.39 in.).

Table 23 - MMA-B080*xxx* Flange Dimensions

Motor Cat. No.	Flange Cat. No.	Bolt Circle Diameter [M] mm (in.)	MIG Hole Diameter [S] mm (in.)	Pilot Diameter [N] mm (in.)	Pilot Thickness [T] mm (in.)	Max Flange Outer Diameter [P] mm (in.)	Flange Width Square [AC] mm (in.)
MMA-B080A*xx* MMA-B080B*xx* MMA-B080C*xx* MMA-B080D*xx* MMA-B080E*xx*	A, B, C, D	165 (6.50)	12 (0.47)	130 (512)	3.5 (0.14)	200 (7.87)	158 (6.22)
	E, F, G	215 (8.46)	14.5 (0.57)	180 (7.09)	4 (0.16)	250 (9.84)	210 (8.27)

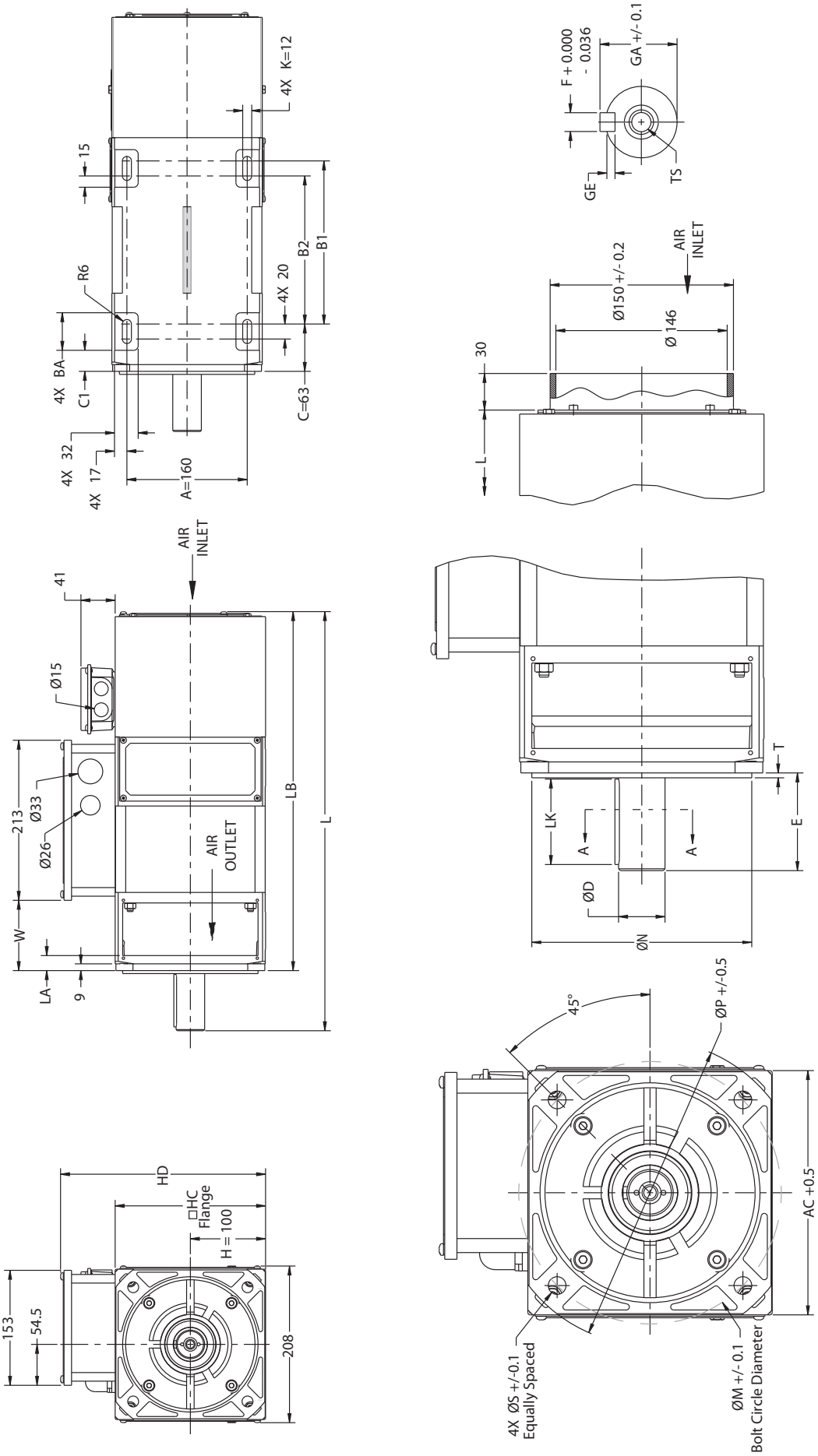

Figure 11 - MMA-B100xxx Motor Dimensions

Table 24 - MMA-B100*xxx* Motor Dimensions

Motor Cat. No.	A mm (in.)	B2 mm (in.)	B1 mm (in.)	BA mm (in.)	C mm (in.)	C1 mm (in.)	L (1) (2) (3) mm (in.)	LA mm (in.)	LB (1) (2) (4) mm (in.)	W (2) (4) mm (in.)	H mm (in.)	HC mm (in.)	HD mm (in.)	K mm (in.)
MMA-B100A*xx*	160 (6.30)	197 (7.76)	217 (8.54)	50 (1.97)	63 (2.48)	28 (1.10)	560 (22.04)	20 (0.79)	480 (18.90)	93 (3.66)	100 (3.93)	200 (7.87)	273 (10.75)	12 (0.47)
MMA-B100B*xx*		237 (9.33)	257 (10.12)				600 (23.62)		520 (20.47)	133 (5.24)				
MMA-B100C*xx*		267 (10.51)	287 (11.30)				630 (24.80)		550 (21.65)	163 (6.42)				
MMA-B100D*xx*		307 (12.09)	327 (12.87)				670 (26.38)		590 (23.23)	203 (7.99)				
MMA-B100E*xx*		362 (14.25)	382 (15.04)				725 (28.54)		645 (25.39)	258 (10.16)				

(1) For all motors except those with no holding brake, catalog option (MMA-B100*xxx-xxxx*22*xxxxxxx*) add 80 mm (3.15 in.) to dimension L and LB.
(2) For shaft options check shaft and key dimension table.
(3) When the reduced shaft option is selected (Shaft Codes: N, P, Q, R, S, T) length L is reduced by 10 mm (0.39 in.).
(4) When the increased flange option is selected (Flange Codes: E, F, G) dimension LB, C, and W increases by 10 mm (0.39 in.).

Table 25 - MMA-B100*xxx* Shaft Dimensions

Motor Cat. No.	Shaft Cat. No.	Key Width [F] mm (in.)	Shaft Width Over Key [GA] mm (in.)	Depth of Keyway [GE] mm (in.)	Key Length [LK] mm (in.)	Diameter [D] mm (in.)	Shaft Height [E] (1) mm (in.)	Thread Size [TS]
MMA-B100A*xx* MMA-B100B*xx* MMA-B100C*xx* MMA-B100D*xx* MMA-B100E*xx*	A, B, C, D	10 (0.39)	41 (1.61)	5 (0.20)	70 (2.76)	38 (1.50)	80 (3.15)	M12
	E, F	–						
MMA-B100A*xx*	N, P, Q, R	8 (0.31)	31 (1.22)	4 (0.16)	50 (1.20)	28 (1.10)	60 (2.36)	M10
	S, T	–						

(1) When increased dimension flange option is selected (Flange Codes: E, F, G), the length of the shaft reduces by 10 mm (0.39 in.).

Table 26 - MMA-B100*xxx* Flange Dimensions

Motor Cat. No.	Flange Cat. No.	Bolt Circle Diameter [M] mm (in.)	MIG Hole Diameter [S] mm (in.)	Pilot Diameter [N] mm (in.)	Pilot Thickness [T] mm (in.)	Max Flange Outer Diameter [P] mm (in.)	Flange Width Square [AC] mm (in.)
MMA-B100A*xx* MMA-B100B*xx* MMA-B100C*xx* MMA-B100D*xx* MMA-B100E*xx*	A, B, C, D	215 (8.46)	14.5 (0.57)	180 (7.09)	4 (0.16)	250 (9.84)	198 (7.80)
	E, F, G	265 (10.43)	14.5 (0.57)	230 (9.06)	4 (0.16)	300 (11.81)	250 (9.84)

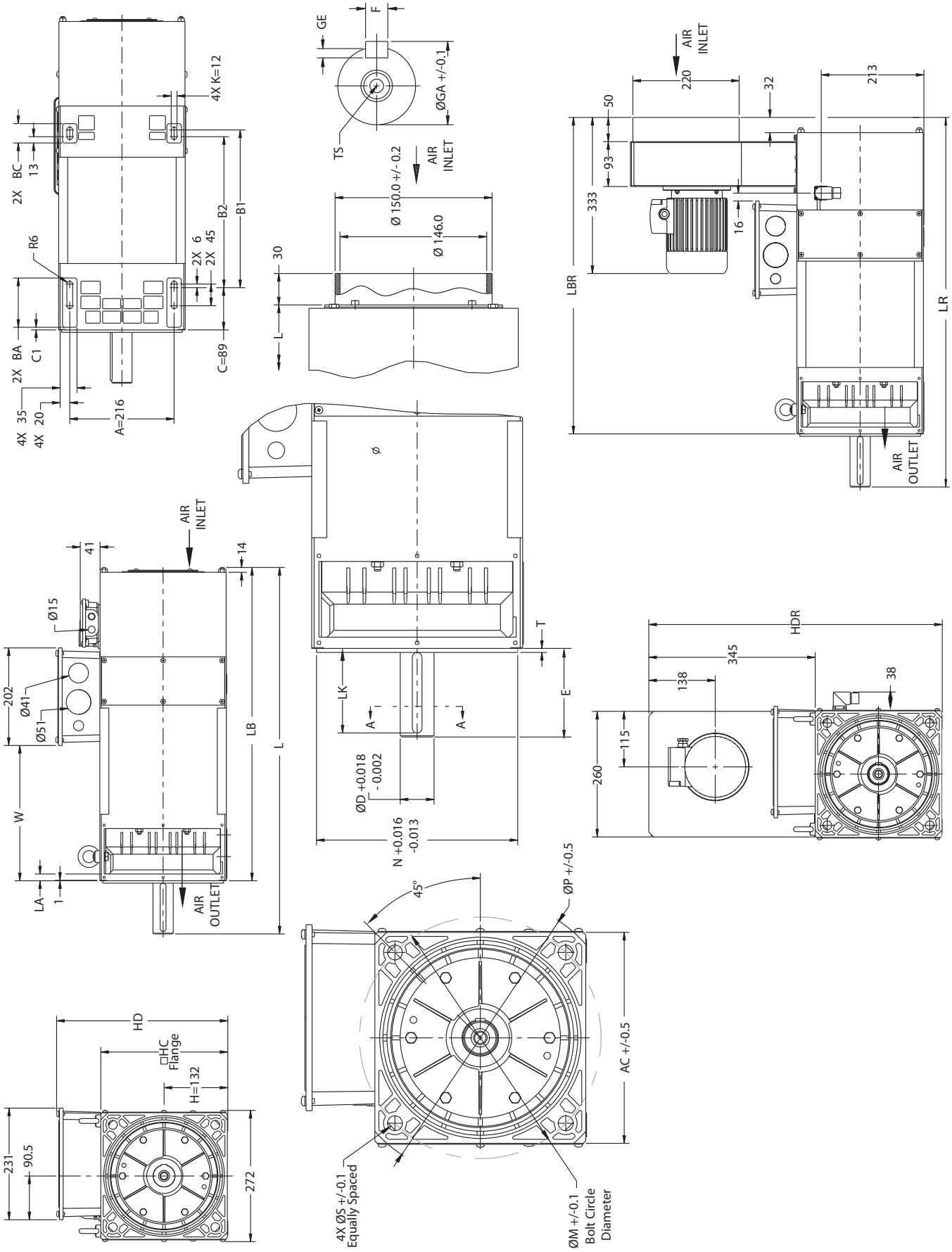

Figure 12 - MMA-B132xxx Motor Dimensions

Table 27 - MMA-B132*xxx* Motor Dimensions (1)

Motor Cat. No.	A mm (in.)	B2 mm (in.)	B1 mm (in.)	BA mm (in.)	BC mm (in.)	C mm (in.)	C1 mm (in.)	L (2) (3) mm (in.)	LR (3)(4) mm (in.)	LA mm (in.)	LB (2) mm (in.)	LBR (4) mm (in.)	W mm (in.)	H mm (in.)	HC mm (in.)	HD mm (in.)	HDR mm (in.)	K mm (in.)
MMA-B132A*xx*	216 (8.50)	236 (10.35)	250 (9.84)	102 (4.02)	40 (1.57)	89 (3.50)	5.5 (0.22)	690 (5) (27.17)	690 (5) (27.17)	14 (0.55)	580 (22.83)	580 (22.83)	205 (807)	132 (5.20)	263 (10.35)	354 (13.94)	608 (23.94)	12 (0.47)
MMA-B132B*xx*		276 (10.87)	290 (11.42)					730 (5) (28.74)	730 (5) (28.74)		620 (24.41)	620 (24.41)	245 (9.65)					
MMA-B132C*xx*		311 (12.24)	325 (12.80)					765 (5) (30.12)	765 (5) (30.12)		655 (25.79)	655 (25.79)	280 (11.02)					
MMA-B132D*xx*		341 (13.43)	355 (13.98)					795 (31.30)	795 (31.30)		685 (26.97)	685 (26.97)	310 (12.20)					
MMA-B132E*xx*		401 (15.79)	415 (16.34)					855 (33.66)	855 (33.66)		745 (29.33)	745 (29.33)	370 (14.57)					

(1) LR, LBR, and HDR are specific to radial motors. L, LB, and HD are specific to axial motors.
(2) For all motors except those with no holding brake, catalog option (MMA-B132*xxx-xxxx22xxxxxxx*), add 115 mm (4.53 in.) to dimension L and LB.
(3) For shaft options check shaft and key dimension table.
(4) For all radial blower motors except those with no holding brake, catalog option (MMA-B132*xxx-xxxx22Cxxxxxx*), add 50 mm (1.97 in.) to dimension LR and LBR.
(5) For MMA-B132A*xx*, MMA-B132B*xx*, and MMA-B132C*xx* motors, when the reduced shaft option is selected (Shaft Codes: N, P, Q, R, S, T) length L and LR is reduced by 30 mm (1.18 in.).

Table 28 - MMA-B132*xxx* Shaft Options

Motor Cat. No.	Shaft Cat. No.	Key Width [F] mm (in.)	Shaft Width Over Key [GA] mm (in.)	Depth of Keyway [GE] mm (in.)	Key Length [LK] mm (in.)	Diameter [D] mm (in.)	Shaft Height [E] mm (in.)	Thread Size [TS]
MMA-B132A*xx*, MMA-B132B*xx*, MMA-B132C*xx*	A, B, C, D	12 (0.47)	45 (1.77)	5 (0.20)	100 (3.94)	42 (1.65)	110 (4.33)	M16
	E, F	–						
MMA-B132D*xx*, MMA-B132E*xx*	A, B, C, D	14 (0.55)	51.5 (2.03)	5.5 (0.22)	100 (3.94)	48 (1.89)	110 (4.33)	M20
	E, F	–						
MMA-B132A*xx*, MMA-B132B*xx*, MMA-B132C*xx*	G, H, J, K	14 (0.55)	51.5 (2.03)	5.5 (0.22)	100 (3.94)	48 (1.89)	110 (4.33)	M20
	L, M	–						
MMA-B132A*xx*, MMA-B132B*xx*, MMA-B132C*xx*	N, P, Q, R	10 (0.39)	41 (1.61)	5 (0.20)	70 (2.76)	38 (1.50)	80 (3.15)	M12
	S, T	–						
MMA-B132D*xx*, MMA-B132E*xx*	N, P, Q, R	12 (0.47)	45 (1.77)	5 (0.20)	100 (3.94)	42 (1.65)	110 (4.33)	M16
	S, T	–						

Table 29 - MMA-B132*xxx* Flange Options

Motor Cat. No.	Flange Cat. No.	Bolt Circle Diameter [M] mm (in.)	MIG Hole Diameter [S] mm (in.)	Pilot Diameter [N] mm (in.)	Pilot Thickness [T] mm (in.)	Max Flange Outer Diameter [P] mm (in.)	Flange Width Square [AC] mm (in.)
MMA-B132A*xx*, MMA-B132B*xx*, MMA-B132C*xx*, MMA-B132D*xx*, MMA-B132E*xx*	A, B, C, D	300 (11.81)	18.5 (0.73)	250 (9.84)	5 (0.20)	350 (13.78)	262 (10.31)
	H, J, K	265 (10.43)	14.5 (0.57)	230 (9.05)	4 (0.16)	300 (11.81)	262 (10.31)

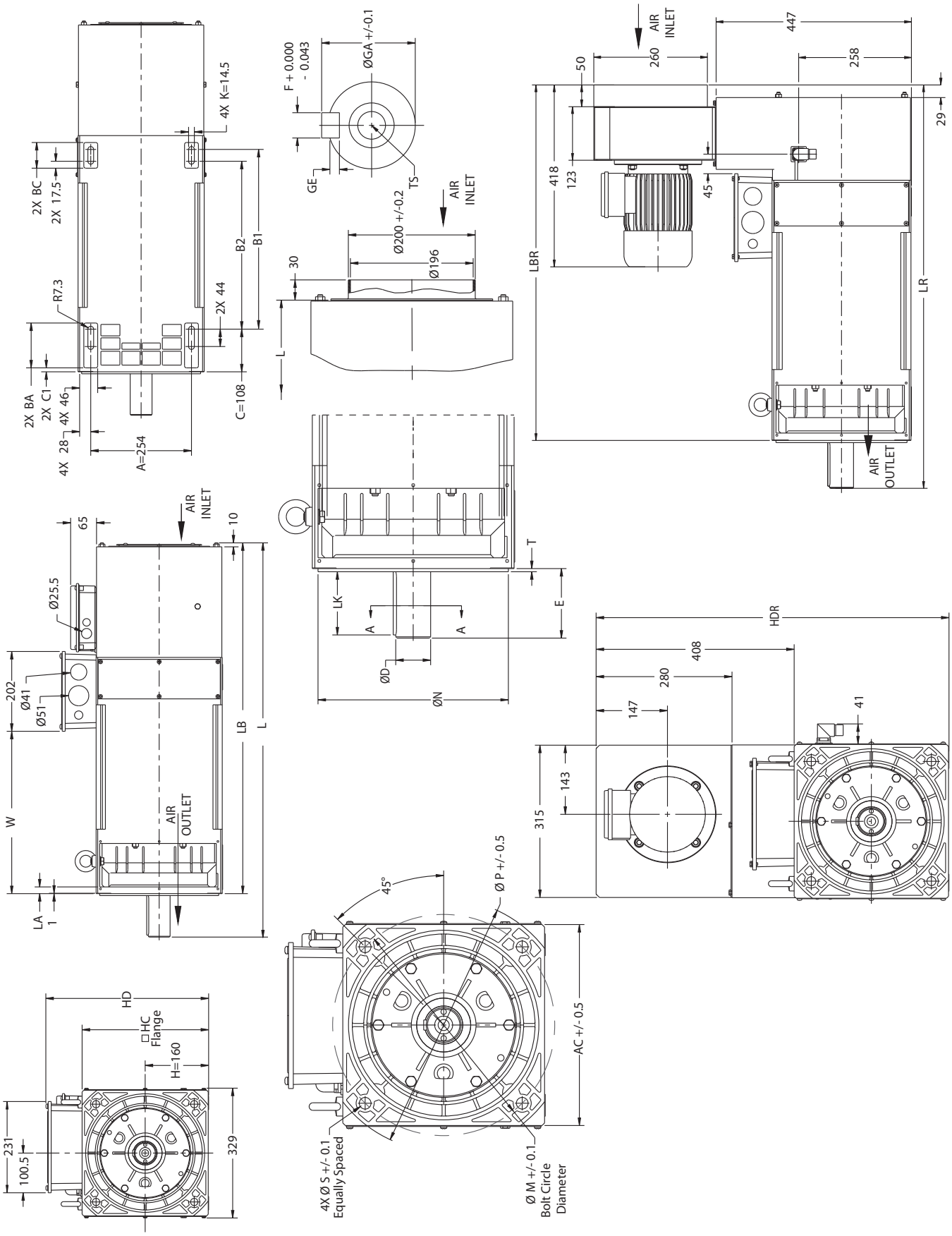

Figure 13 - MMA-B160xxx Motor Dimensions

Table 30 - MMA-B160*xxx* Motor Dimensions [1]

Motor Cat. No.	A mm (in.)	B2 mm (in.)	B1 mm (in.)	BA mm (in.)	BC mm (in.)	C mm (in.)	C1 mm (in.)	L [2][3][4] mm (in.)	LR [3][4][5] mm (in.)	LA mm (in.)	LB [2] mm (in.)	LBR [5] mm (in.)	W mm (in.)	H mm (in.)	HC mm (in.)	HD mm (in.)	HDR mm (in.)	K mm (in.)
MMA-B160A*xx*	254 (10.00)	340 (13.39)	370 (14.57)	114 (4.49)	65 (2.56)	108 (4.25)	10 (0.39)	915 (36.02)	845 (33.27)	17 (0.67)	805 (31.69)	735 (28.93)	326 (12.83)	160 (6.30)	319 (12.56)	410 (16.14)	727 (28.62)	14.5 (0.57)
MMA-B160B*xx*		375 (14.76)	405 (15.94)					950 (37.40)	880 (34.65)		840 (33.07)	770 (30.31)	361 (14.21)					
MMA-B160C*xx*		425 (16.73)	455 (17.91)					1000 (39.37)	930 (36.61)		890 (35.04)	820 (32.28)	411 (16.18)					
MMA-B160D*xx*		470 (18.50)	500 (19.68)					1045 (41.14)	975 (38.38)		935 (36.81)	865 (34.06)	456 (17.95)					

(1) LR, LBR, and HDR are specific to radial motors. L, LB, and HD are specific to axial motors.
(2) For all motors except those with no holding brake, catalog option (MMA-B160*xxx-xxxx22xxxxxxx*) add 155 mm (6.10 in.) to dimension L and LB.
(3) For shaft options check shaft and key dimension table.
(4) When the increased shaft option is selected (Shaft Codes: G, H, J, K, L, M), length L and LR is increased by 30 mm (1.18 in.).
(5) For all radial blower motors except those with no holding brake, catalog option (MMA-B160*xxx-xxxx22xxxxxxx*), add 50 mm (1.97 in.) to dimension LR and LBR.

Table 31 - MMA-B160*xx* Shaft Dimensions

Motor Cat. No.	Shaft Cat. No.	Key Width [F] mm (in.)	Shaft Width Over Key [GA] mm (in.)	Depth of Keyway [GE] mm (in.)	Key Length [LK] mm (in.)	Diameter [D] mm (in.)	Shaft Height [E] mm (in.)	Thread Size [TS]
MMA-B160A*xx*, MMA-B160B*xx*, MMA-B160C*xx*, MMA-B160D*xx*	A, B, C, D	16 (0.63)	59 (2.32)	6 (0.24)	100 (3.94)	55 (2.17)	110 (4.33)	M20
	E, F	–						
MMA-B160A*xx*, MMA-B160B*xx*, MMA-B160C*xx*, MMA-B160D*xx*	G, H, J, K	18 (0.71)	64 (2.52)	7 (0.28)	130 (5.12)	60 (2.36)	140 (5.51)	M20
	L, M	–						
MMA-B160A*xx*, MMA-B160B*xx*	N, P, Q, R	14 (0.55)	51.5 (2.03)	5.5 (0.22)	100 (3.94)	48 (1.89)	110 (4.33)	M20
	S, T	–						

Table 32 - MMA-B160*xx* Flange Dimensions

Motor Cat. No.	Flange Cat. No.	Bolt Circle Diameter [M] mm (in.)	MIG Hole Diameter [S] mm (in.)	Pilot Diameter [N] mm (in.)	Pilot Thickness [T] mm (in.)	Max Flange Outer Diameter [P] mm (in.)	Flange Width Square [AC] mm (in.)
MMA-B160A*xx*, MMA-B160B*xx*, MMA-B160C*xx*, MMA-B160D*xx*	A, B, C, D	350 (13.78)	18.5 (0.73)	300 (11.81)	5 (0.20)	400 (15.75)	318 (12.52)
	H, J, K	300 (11.81)	18.5 (0.73)	250 (9.84)	5 (0.20)	400 (15.75)	318 (12.52)

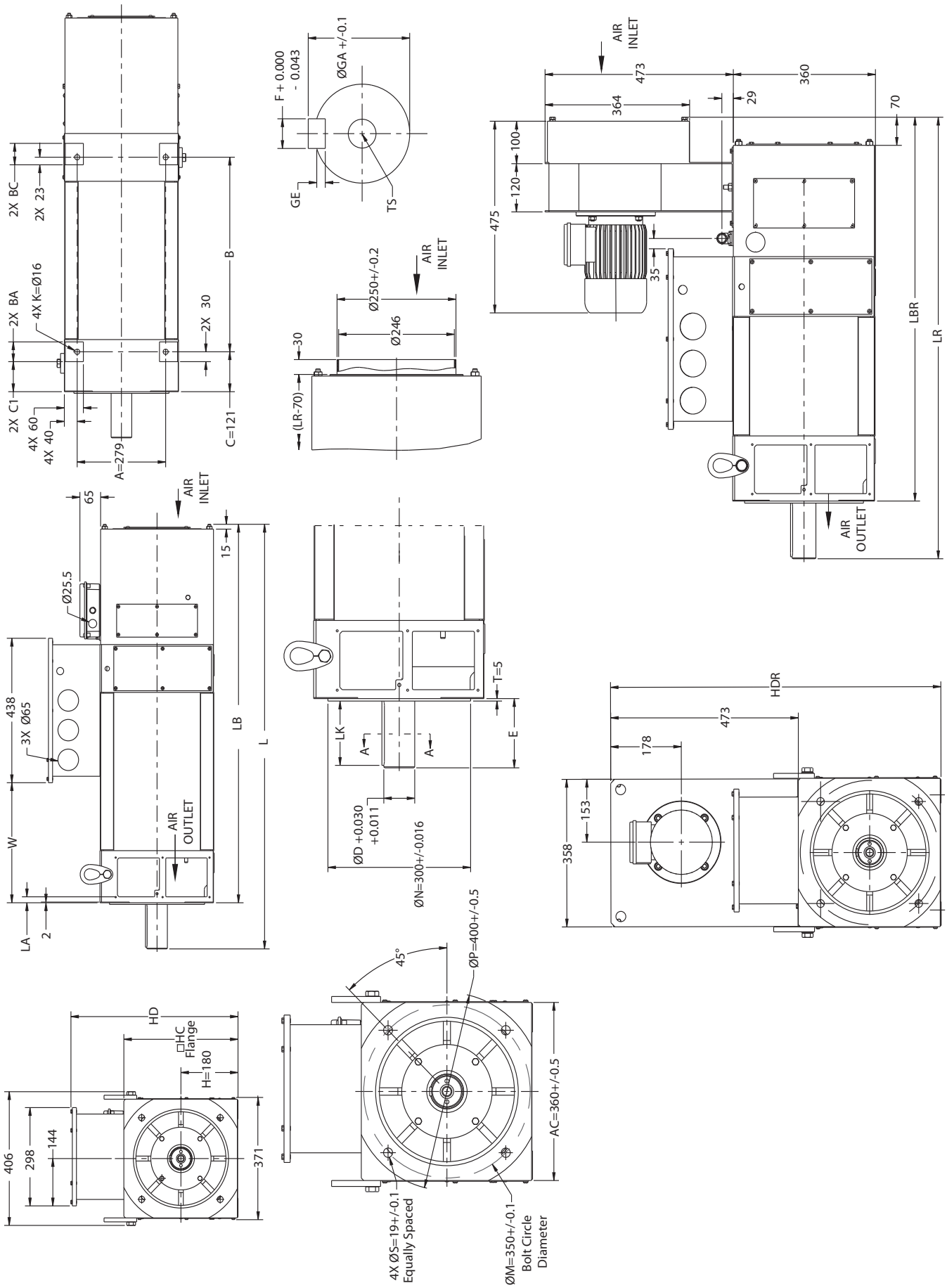

Figure 14 - MMA-B180xxx Motor Dimensions

Table 33 - MMA-B180*xxx* Motor Dimensions (1)

Motor Cat. No.	A mm (in.)	B mm (in.)	BA mm (in.)	BC mm (in.)	C mm (in.)	C1 mm (in.)	L (2) mm (in.)	LR mm (in.)	LA mm (in.)	LB (2) mm (in.)	LBR mm (in.)	W mm (in.)	H mm (in.)	HC mm (in.)	HD mm (in.)	HDR mm (in.)	K mm (in.)
MMA-B180A*xx* MMA-B180B*xx* MMA-B180C*xx* MMA-B180D*xx*	279 (10.98)	400 (15.75)	60 (2.36)	65 (2.56)	121 (4.76)	91 (3.58)	1100 (43.31)	1075 (42.32)	18 (0.71)	960 (37.80)	935 (36.81)	174 (6.85)	180 (7.09)	360 (14.17)	527 (20.75)	833 (32.80)	Ø 16 (0.63)
		520 (20.47)					1220 (48.03)	1195 (47.04)		1080 (42.52)	1055 (41.53)	294 (11.57)					
		590 (23.23)					1290 (50.79)	1265 (49.80)		1150 (45.27)	1125 (44.29)	364 (14.33)					
		640 (25.20)					1340 (52.75)	1315 (51.77)		1200 (47.24)	1175 (46.26)	414 (16.30)					

(1) LR, LBR, and HDR are specific to radial motors. L, LB, and HD are specific to axial motors.
(2) For all motors except those with no holding brake, catalog option (MMA-B180*xxx-xxxx*22*xxxxxxx*), add 140 mm (5.51 in.) to dimension L and LB.

Table 34 - MMA-B180*xxx* Shaft Dimensions

Motor Cat. No.	Shaft Cat. No.	Key Width [F] mm (in.)	Shaft Width Over Key [GA] mm (in.)	Depth of Keyway [GE] mm (in.)	Key Length [LK] mm (in.)	Diameter [D] mm (in.)	Shaft Height [E] mm (in.)	Thread Size [TS]
MMA-B180A*xx*	A, B, C, D	18 (0.71)	64 (2.52)	7 (0.28)	130 (5.12)	60 (2.36)	140 (5.51)	M20
	E, F	–						
MMA-B180B*xx*, MMA-B180C*xx*, MMA-B180D*xx*	A, B, C, D	18 (0.71)	69 (2.72)	7 (0.28)	130 (5.12)	65 (2.56)	140 (5.51)	M20
	E, F	–						

IMPORTANT For MMA-B180*xxx* motors, the flange size cannot be increased or decreased. The HC dimension is the diameter of the flange. See Table 13 for additional information.

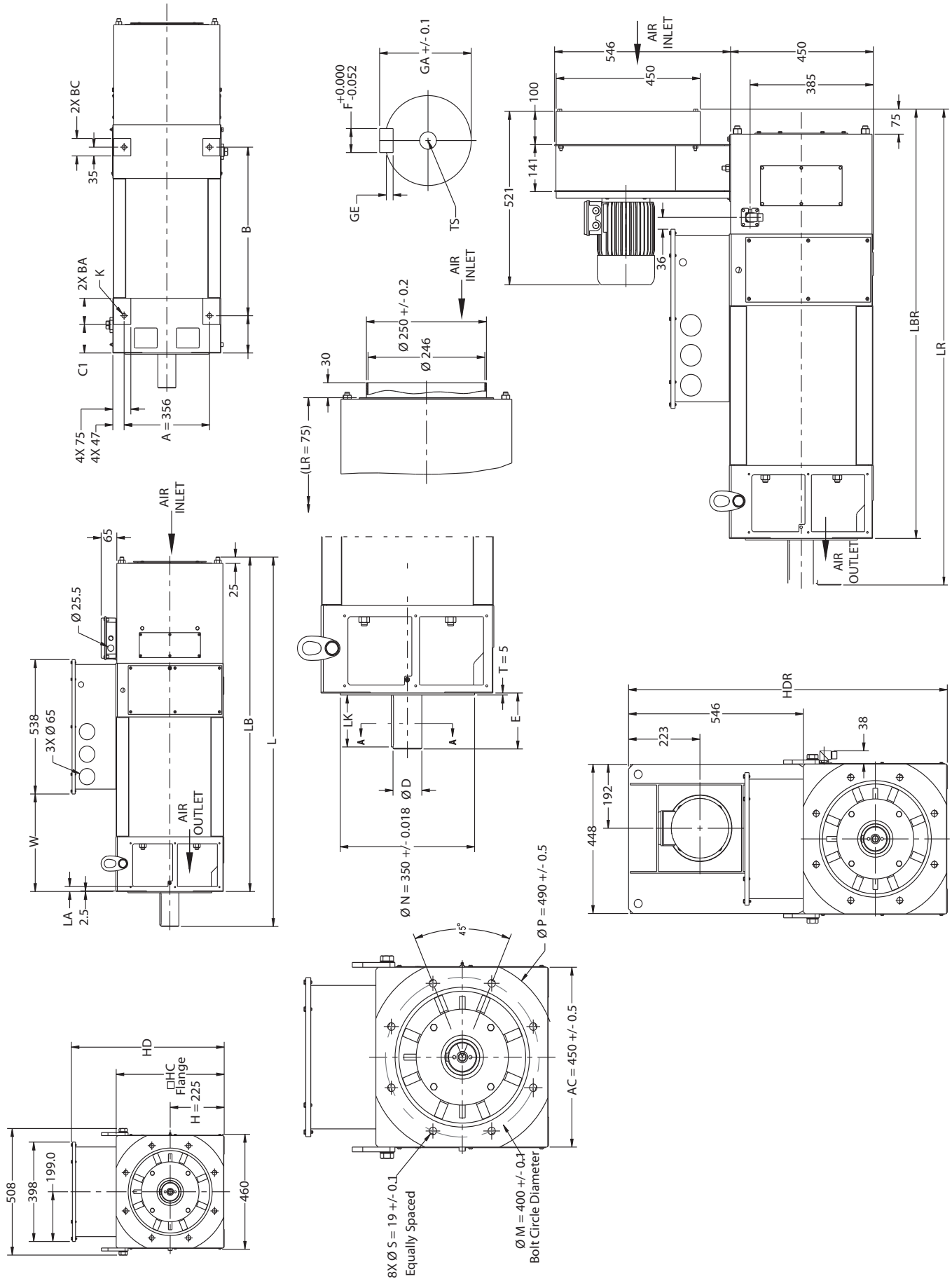

Figure 15 - MMA-B225xxx Motor Dimensions

Table 35 - MMA-B225*xxx* Motor Dimensions (1)

Motor Cat. No.	A mm (in.)	B mm (in.)	BA mm (in.)	BC mm (in.)	C mm (in.)	C1 mm (in.)	L (2) (3) mm (in.)	LR (3) mm (in.)	LA mm (in.)	LB (2) mm (in.)	LBR mm (in.)	W mm (in.)	H mm (in.)	HC mm (in.)	HD mm (in.)	HDR mm (in.)	K mm (in.)
MMA-B225A*xx* MMA-B225B*xx* MMA-B225C*xx* MMA-B225D*xx* MMA-B225E*xx*	356 (14.02)	555 (21.85)	105 (4.13)	70 (2.76)	149 (5.87)	114 (4.50)	1365 (53.74)	1315 (51.77)	20 (0.79)	1225 (48.22)	1175 (46.26)	270 (10.63)	225 (8.86)	450 (17.71)	640 (25.20)	996 (39.21)	Ø18 (0.71)
		615 (24.21)					1425 (56.10)	1375 (54.13)		1285 (50.59)	1235 (48.62)	330 (12.99)					
		675 (26.57)					1485 (58.46)	1435 (56.50)		1345 (52.95)	1295 (50.98)	390 (15.35)					
		803 (31.61)					1645 (64.76)	1595 (62.80)		1475 (58.07)	1425 (56.10)	518 (20.39)					
		923 (36.33)					1765 (65.50)	1715 (67.52)		1595 (62.80)	1545 (60.83)	638 (25.12)					

(1) LR, LBR, HDR are specific to radial motors. L, LB, and HD are specific to axial motors.
(2) For all motors except those with no holding brake, catalog option (MMA-B225xxx-xxxx22xxxxxxx), add 160 mm (6.29 in.) to dimension L and LB.
(3) When the increased shaft option is selected (shaft codes: G,H,J,K,L,M), length L and LR is increased by 30 mm (1.18 in.).

Table 36 - MMA-B225*xx* Shaft Dimensions

Motor Cat. No.	Shaft Cat. No.	Key Width [F] mm (in.)	Shaft Width Over Key [GA] mm (in.)	Depth of Keyway [GE] mm (in.)	Key Length [LK] mm (in.)	Diameter [D] mm (in.)	Shaft Height [E] mm (in.)	Thread Size [TS]
MMA-B225A*xx*, MMA-B225*xx*, MMA-B225C*xx*	A, B, C, D	20 (0.79)	79.5 (3.13)	7.5 (0.29)	130 (5.12)	75 (2.95)	140 (5.51)	M20
	E, F	–						
MMA-B225D*xx*, MMA-B225E*xx*	A, B, C, D	22 (0.87)	90 (3.54)	9 (0.35)	160 (6.30)	85 (3.35)	170 (6.69)	M20
	E, F	–						
MMA-B225A*xx*, MMA-B225B*xx*, MMA-B225C*xx*	G, H, J, K	22 (0.87)	90 (3.54)	9 (0.35)	160 (6.30)	85 (3.35)	170 (6.69)	M20
	L, M	–						

IMPORTANT For MMA-B225*xxx* motors, the flange size cannot be increased or decreased. The HC dimension is the diameter of the flange. See Table 13 for additional information.

Motor Load Force Ratings

Table 37 - Shaft Load Specifications for All Bearing Options at 1500 RPM (When Load is Applied at the Midpoint of the Shaft Extension)

Motor Cat. No.	Deep Groove Ball Bearings						Roller Bearing			High Speed Bearing					
	DE: Standard NDE: Standard	DE: Regreasable NDE: Standard	DE: Standard NDE: Standard, Brush	DE: Regreasable NDE: Standard, Brush	DE: Standard NDE: Ball Bearing, Insulated	DE: Regreasable NDE: Ball Bearing, Insulated	DE: Regreasable NDE: Standard Ball Bearing	DE: Regreasable NDE: Standard Ball Bearing, Brush	DE: Regreasable NDE: Ball Bearing, Insulated	DE: High Speed NDE: High Speed	DE: High Speed, Regreasable NDE: High Speed, Regreasable	DE: High Speed NDE: High Speed, Brush	DE: High Speed, Regreasable NDE: High Speed, Brush, Regreasable	DE: High Speed NDE: Hybrid Ceramic Insulated	DE: High Speed Regreasable NDE: Hybrid Ceramic Insulated
	A	B	C	D	E	F	J (1)	K (1)	L (1)	M	N	P	Q	R	S
MMA-B080*xxx*	N=1500 Fr=1000 N Far=430 N Fa=800 N	–					N=1500 Fr=1800 N Far=270 N Fa = 800 N	–							
MMA-B100*xxx*	N=1500 Fr=1700 N Far=590 N Fa=1100 N	–			N=1500 Fr=1700 N Far=590 N Fa=1100 N	–	N=1500 Fr=3100 N Far=350 N Fa=1100 N	–	N=1500 Fr=3100 N Far=350 N Fa=1100 N	N=1500 Fr=1700 N Far=320 N Fa=1100 N	–				
MMA-B132*xxx*	N=1500 Fr=2300 N Far=810 N Fa=1500 N						N=1500 Fr=4900 N Far=490 N Fa=1500 N			N=1500 Fr=2600 N Far=380 N Fa=1500 N					
MMA-B160*xxx*	N=1500 Fr=4300 N Far=970 N Fa=1800 N						N=1500 Fr=7000 N Far=590 N Fa=1800 N			–	N=1500 Fr=4300 N Far=490 N Fa=1800 N	–	N=1500 Fr=4300 N Far=490 N Fa=1800 N	–	N=1500 Fr=4300 N Far=490 N Fa=1800 N
MMA-B180*xxx*	N=1500 Fr=6600 N Far=1080 N Fa=2000 N						N=1500 Fr=9800 N Far=650 N Fa=2000 N				N=1500 Fr=6600 N Far=540 N Fa=2000 N		N=1500 Fr=6600 N Far=540 N Fa=2000 N		N=1500 Fr=6600 N Far=540 N Fa=2000 N
MMA-B225*xxx*	–	N=1500 Fr=7000 N Far=1620 N Fa=3000 N	–	N=1500 Fr=7000 N Far=1620 N Fa=3000 N	–	N=1500 Fr=7000 N Far=1620 N Fa=3000 N	N=1500 Fr=12000 N Far=970 N Fa=3000 N				N=1500 Fr=7000 N Far=810 N Fa=3000 N		N=1500 Fr=7000 N Far=810 N Fa=3000 N		N=1500 Fr=7000 N Far=810 N Fa=3000 N

(1) Multiply the Fr value by value in Table 39 based on the direction of the force.

- N = Maximum speed (rpm) at which loads in the table can be applied
- Fr = Maximum radial load (independent of axial load)
- Far = Maximum axial load when radial load is also present
- Fa = Maximum axial load when no radial load is present

Table 38 - Shaft Load Specifications for All Bearing Options at Maximum Bearing Speed (When Load is Applied at the Midpoint of the Shaft Extension) (1)

Motor Cat. No.	Deep Groove Ball Bearings						Roller Bearing			High Speed Bearing					
	DE: Standard NDE: Standard	DE: Regreasable NDE: Standard	DE: Standard NDE: Standard, Brush	DE: Regreasable NDE: Standard, Brush	DE: Standard NDE: Ball Bearing, Insulated	DE: Regreasable NDE: Ball Bearing, Insulated	DE: Regreasable NDE: Standard Ball Bearing	DE: Regreasable NDE: Standard Ball Bearing, Brush	DE: Regreasable NDE: Ball Bearing, Insulated	DE: High Speed NDE: High Speed	DE: High Speed, Regreasable NDE: High Speed, Regreasable	DE: High Speed NDE: High Speed, Brush	DE: High Speed, Regreasable NDE: High Speed, Brush, Regreasable	DE: High Speed NDE: Hybrid Ceramic Insulated	DE: High Speed Regreasable NDE: Hybrid Ceramic Insulated
	A	B	C	D	E	F	J (2)	K (2)	L (2)	M	N	P	Q	R	S
MMA-B080*xxx*	N=9000 Fr=400 N Far=200 N Fa=440 N	–					N=8000 Fr=720 N Far=130 N Fa = 280 N	–							
MMA-B100*xxx*	N=7500 Fr=780 N Far=280 N Fa=610 N	–			N=7500 Fr=780 N Far=280 N Fa=610 N	–	N=6700 Fr=1430 N Far=160 N Fa=360 N	–	N=6700 Fr=1430 N Far=160 N Fa=360 N	N=9000 Fr=410 N Far=150 N Fa=330 N	–				
MMA-B132*xxx*	N=6700 Fr=1180 N Far=380 N Fa=830 N						N=4900 Fr=2160 N Far=230 N Fa=500 N			N=8000 Fr=670 N Far=180 N Fa=390 N					

Table 38 - Shaft Load Specifications for All Bearing Options at Maximum Bearing Speed (When Load is Applied at the Midpoint of the Shaft Extension) (Continued)(1)

Motor Cat. No.	Deep Groove Ball Bearings						Roller Bearing			High Speed Bearing					
	DE: Standard NDE: Standard	DE: Regreasable NDE: Standard	DE: Standard NDE: Standard, Brush	DE: Regreasable NDE: Standard, Brush	DE: Standard NDE: Ball Bearing, Insulated	DE: Regreasable NDE: Ball Bearing, Insulated	DE: Regreasable NDE: Standard Ball Bearing	DE: Regreasable NDE: Standard Ball Bearing, Brush	DE: Regreasable NDE: Ball Bearing, Insulated	DE: High Speed NDE: High Speed	DE: High Speed, Regreasable NDE: High Speed, Regreasable	DE: High Speed NDE: High Speed, Brush	DE: High Speed, Regreasable NDE: High Speed, Brush, Regreasable	DE: High Speed NDE: Hybrid Ceramic Insulated	DE: High Speed Regreasable NDE: Hybrid Ceramic Insulated
	A	B	C	D	E	F	J (2)	K (2)	L (2)	M	N	P	Q	R	S
MMA-B160*xxx*	N=5300 Fr=2240 N Far=450 N Fa=990 N						N=4800 Fr=3640 N Far=280 N Fa=610 N			–	N=7500 Fr=1040 N Far=230 N Fa=500 N	–	N=7500 Fr=1040 N Far=230 N Fa=500 N	–	N=7500 Fr=1040 N Far=230 N Fa=500 N
MMA-B180*xxx*	N=4300 Fr=3580 N Far=500 N Fa=1100 N						N=3800 Fr=5320 N Far=300 N Fa=660 N				N=6300 Fr=1740 N Far=250 N Fa=550 N		N=6300 Fr=1740 N Far=250 N Fa=550 N		N=6300 Fr=1740 N Far=250 N Fa=550 N
MMA-B225*xxx*	–	N=3400 Fr=4000 N Far=750 N Fa=1650 N	–	N=3400 Fr=4000 N Far=750 N Fa=1650 N	–	N=3400 Fr=4000 N Far=750 N Fa=1650 N	N=2800 Fr=6860 N Far=450 N Fa=990 N				N=4800 Fr=2060 N Far=380 N Fa=830 N		N=4800 Fr=2060 N Far=380 N Fa=830 N		N=4800 Fr=2060 N Far=380 N Fa=830 N

(1) These are the published bearing values. See Table 41 on page 42 for the n_{max} allowable and n_{max} recommended motor speed.
(2) Multiply the Fr value by value in Table 39 based on the direction of the force.

- N = Maximum speed (rpm) at which loads in the table can be applied
- Fr = Maximum radial load (independent of axial load)
- Far = Maximum axial load when radial load is also present
- Fa = Maximum axial load when no radial load is present

Table 39 - Radial Force (Fr) Derating Factor for Pulley-Driven or Foot-Mounted Motors with Roller Bearings

Motor Cat. No. (1)	Bottom	Top	Sides
MMA-B080*xxx*	0.8	0.65	0.75
MMA-B100*xxx*	0.8	0.65	0.75
MMA-B132*xxx*	0.8	0.65	0.75
MMA-B160*xxx*	0.8	0.65	0.75
MMA-B180*xxx*	1.0	0.75	0.8
MMA-B225*xxx*	1.0	0.75	0.8

(1) Only for bearing catalog numbers J, K, and L. Multiply the Fr value by value in Table 37 or Table 38 based on the direction of the force.

The direction of the force (top, bottom, or side) is used to calculate the radial force on the shaft when roller bearings are used in conjunction with a pulley-drive or foot-mounted motor. See the image to better understand in which direction the force is felt.

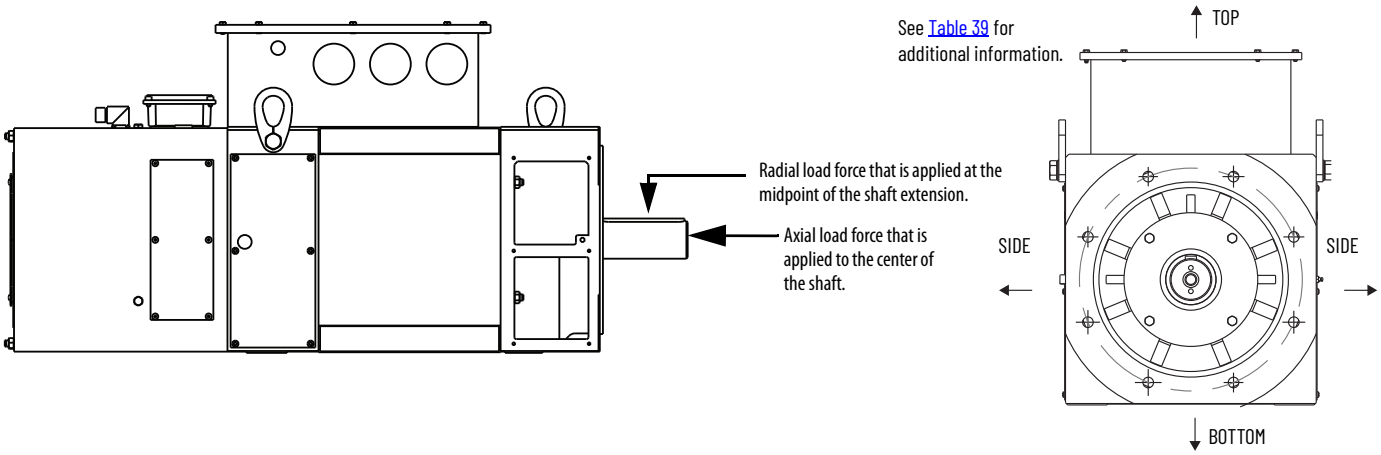

Power Diagram

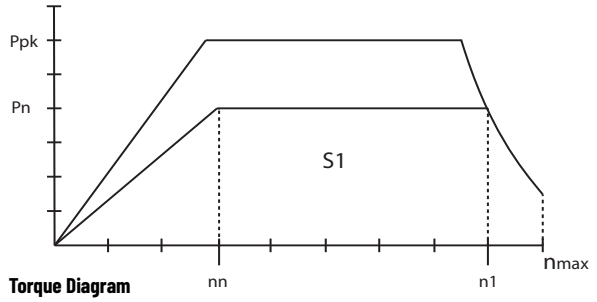

Torque Diagram

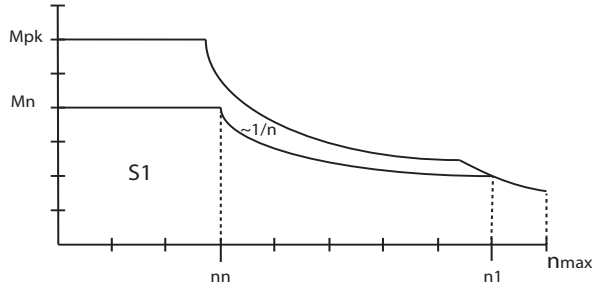

Table 40 - Speed Limits for Kinetix MMA Main Motors

Rated Speed (nn) rpm	Maximum Speed at Rated Power (n1)	
	400V AC	480V AC
580	1400	1740
1000	2400	3000
1500	3600	4500
1800	4300	5400
2200	5200	6000
2600	6000	6000

Chart Legend	
nn	Rated speed
n1	Maximum speed at rated power
n_{max} (1)(2)	Maximum mechanical speed
Mn	Continuous stall torque
Mpk	Peak stall torque
Pn	Rated power
Ppk	Peak power
S1 (3)	Continuous-duty operation

(1) The n_{max} speeds are determined by the mechanical components of the motor and the operational duty-cycle. See Table 41 for max speed at intermittent or continuous duty.
(2) The n_{max} may not achieve full rated power. It is possible for n_{max} to be less than n1 based on motor configuration.
(3) For additional information, see IEC 60034-1.

Table 41 - Maximum Speed for Intermittent or Continuous Duty

Motor Cat. No.	Intermittent-Duty				Continuous-Duty (S1)			
	Maximum allowed mechanical speed (n_{max}) for intermittent-duty operation				Maximum recommended mechanical speed (n_{max}) for continuous-duty (S1) operation			
	Deep groove ball bearings (Cat. No. A,B,C,D,E,F,G,H)	Roller bearings (Cat. No. J,K,L)	High speed bearings (Cat. No. M,N,P,Q,R,S)	With brake (Cat. No.)	Deep groove ball bearings (Cat. No. A,B,C,D,E,F,G,H)	Roller bearings (Cat. No. J,K,L)	High speed bearings (Cat. No. M,N,P,Q,R,S)	With brake (Cat. No.)
MMA-B080*xxx*	6000	6000	N/A	Cx: 4000	6000	5600	–	Cx: 4000
MMA-B100*xxx*	6000	6000	6000	Dx: 3600	5250	4700	6000	Dx: 3600
MMA-B132*xxx*	6000	6000	6000	Ex: 3600 Fx: 3600	4700	4400	5600	Ex: 3600 Fx: 3600
MMA-B160*xxx*	5300	4800	6000	Fx: 3600 Gx: 3000	3700	3360	5250	Fx: 3600 Gx: 3000
MMA-B180*xxx*	4300	3800	6000	Gx: 3000	3000	2650	4400	Gx: 3000
MMA-B225*xxx*	3400	2800	5000	Gx: 3000 Hx: 2300	2350	1950	3500	Gx: 3000 Hx: 2300

See Kinetix Rotary Motion Specifications Technical Data, publication KNX-TD001, Kinetix 5700 Drive Systems Design Guide, publication KNX-RM010, and Kinetix 7000 Systems Design Guide, publication KNX-RM007 for full tables of power, torque, and speed values for each Kinetix MMA main motor and drive pairing.

Motor Startup

For specific information on startup and commissioning, refer to the drive manual for your system. The information in this section only relates to the motors and does not contain the full explanation on how to startup a system. For the list of drive manuals, see the Additional Resources. Also see Kinetix Motion Rotary Specifications, publication KNX-TD001 for motor data, sizing, and application information.

BURN HAZARD: Outer surfaces of the motor can reach high temperatures during motor operation. Take precautions to help prevent accidental contact with hot surfaces. Consider motor surface temperature when you select motor connectors and cables. Failure to observe these safety procedures could result in personal injury or damage to equipment.

WARNING: Risk of personal injury or equipment damage. Never operate the motor with the shaft key inserted. If the key must stay in the shaft, make sure it is appropriately secured. If there is anomalous operation or suspicion, immediately stop the motor. The checks that are described are not sufficient for all applications or systems.

WARNING: De-energize space heater before startup. Motor failure and damage will occur.

WARNING: Severe damage can occur. These motors are not intended to be used with direct online operation but are intended to be powered by three-phase inverters. Consult with Rockwell Automation Support to verify the feasibility of your application and to take the necessary precautions.

Motor data is included in Studio 5000 Logix Designer® version 34.00 and later.
Motor performance information is also available in Motion Analyzer Online for customer sizing and application configuration.

Inspections Before Startup

- Manually rotate the motor shaft, check for free rotation and the lack of rough points.
- Verify that the motor blower fan or ventilation channel is free from foreign debris.
- Verify that the bolts, motor, or mechanical fixing screws are locked.
- Verify the correct electrical connections and groundings on the motor and blower terminal boards.
- Verify that the motor nameplate data is compatible with the inverter drive system.
- Verify the correct assembly of the mechanical power transmission equipment (couplings, belts, pulleys, gears, and so on).
- Verify the correct operation of the electric blower, the rotation indicated by the arrow, and the efficiency of the cooling system.
- Verify any additional ground connections.
- Verify the operation of the brake, if any, and the lack of friction when the brake is active (motor with released brake).
- Verify that all measures and actions have been taken to avoid contact with parts under voltage or in movement.
- Verify that all mechanical blocks have been removed.
- Verify that no unqualified personnel can operate the system, that personnel have been notified of the startup, and that all measures to operate the motor have been undertaken.

ATTENTION: The Inspections Before Startup are not sufficient for all applications and systems. See the additional information supplied by the system manufacturer and verify that no contradictions exist within the system checks, startup procedures, or other installed products.

Maintenance and Inspection

This section goes into detail about the maintenance and inspections available for the Kinetix MMA main motors. The operations that are described in these sections must be performed by authorized personnel and they must follow all precautions. For the implementation and operation, specific tools and devices could be necessary that are not commonly available in all shops. If the necessary material is not available or one is not certain about how to implement the described operations, contact Rockwell Automation Support with questions or concerns.

ATTENTION: You are not permitted to disassemble the mechanical components of the motor; the exceptions are: the blower, shaft seal, and the standard encoder replacement procedures. All other motor maintenance must be performed by a Rockwell Automation authorized service center.

ATTENTION: To avoid an electric shock hazard, verify that the voltage has discharged completely before servicing.

Standard maintenance and inspection for the motor includes:

- Rotate Feedback Connector to a New Position
- Remove and Install the Feedback Connector
- Brake Considerations
- Bearing Inspection and Lubrication
- Brush for Shaft Currents
- Shaft Key Removal and Installation
- Replace, Inspect, and Maintain Blower Filters
- Blower Conversions
- Instructions to Reposition or Replace the Radial Blower Assembly
- Install the IC17 Clean-air Kit (Includes: Replace Axial Blower)
- Replace Extension Rods
- Replace Encoder
- Shaft Seals

BURN HAZARD: Outer surfaces of the motor can reach high temperatures during motor operation. Take precautions to help prevent accidental contact with hot surfaces. Consider motor surface temperature when you select motor connectors and cables. Failure to observe these safety procedures could result in personal injury or damage to equipment.

Feedback Cable and Motor Feedback Connector: Replacement or Rotation

Feedback connectors are not provided as a replacement part from Rockwell Automation, and it is not recommended to remove or replace them. If the upper shell is damaged, it can be sourced separately (as an Intercontec M23) and replaced without tampering the feedback wiring and pinout connections.

A feedback connector replacement is also available when the full Encoder Replacement Kit is requested. See the Knowledgebase article: Kinetix MMA Frequently Asked Questions, for additional information.

ATTENTION: Do not conduct the high-voltage test on the encoder terminal. Always use shielded cables for the connection with the inverter. To avoid an electric shock hazard, verify that the voltage has discharged completely before servicing.

The motors have an encoder that is connected through a direct coupling. See Table 5 on page 14 for motor feedback and pin out information.

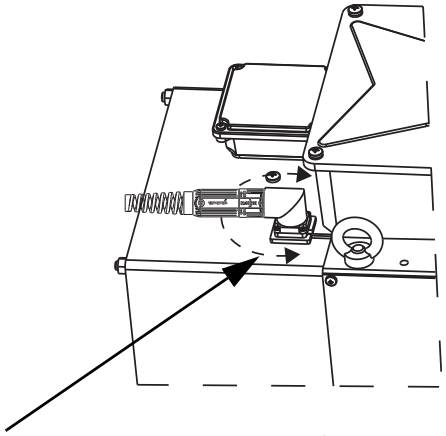

Feedback connectors are designed with 330° of rotational positioning, but this range may be partially or greatly reduced because of the blower or motor and blower terminal boxes.

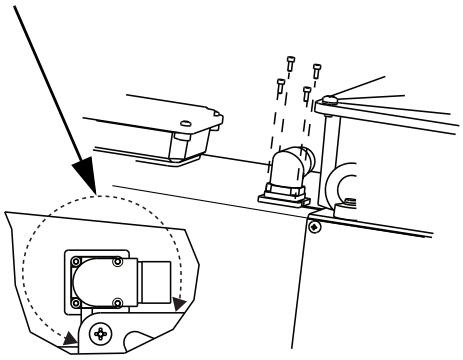

Rotate Feedback Connector to a New Position

1. Connect the feedback cable to the motor feedback connector.
   The attached cable connection provides a larger area to gain more leverage.
2. Slowly rotate the motor connector into the desired position.
3. Disconnect the feedback cable after the motor feedback connector is aligned.

IMPORTANT The MMA-B080*xxx* motor does not allow for rotation of the feedback connector. For information to change the orientation of the MMA-B080*xxx*, see Remove and Install the Feedback Connector.

Remove and Install the Feedback Connector

WARNING: Risk of equipment damage. When repositioning the feedback connector, take extra caution not to disconnect the wiring, or to bend, twist, or crimp the wires.

1. Remove screws that secure the feedback connector to the motor.
2. Rotate the feedback connector to the necessary position.
3. Install the feedback connector on the motor. Torque screws to 1.1 N•m (9.74 lb•in).
   Verify that no wires were damaged.
4. Follow Rotate Feedback Connector to a New Position if additional adjustments must be made.

IMPORTANT The MMA-B080*xxx* motor does not allow for rotation of the feedback connector.

Brake Considerations

Kinetix MMA main motors have various brake options that include electromagnetic brakes, brake status switches (microswitches), hand-release brakes, and a non-brake option. Most motors allow for any combination of these brake options. Brakes are not designed to be repaired or replaced by the customer.

The hand-release is a non-standard option that can be used on all motor shaft heights, except shaft height 225 with the 400V AC control. This manually operated brake hand-release is used to assist an operator to disengage a holding brake. See Operate the Brake Hand-release on page 25 for additional information.

ATTENTION: You are not permitted to disassemble the mechanical components of the motor; the exceptions are: the blower, shaft seal, and the standard encoder replacement procedures. All other motor maintenance must be performed by a Rockwell Automation authorized service center.

Bearing Inspection and Lubrication

Bearings are an integral part of proper motor maintenance. Some Kinetix MMA main motors have an available temperature sensor that can be used to monitor bearing temperatures. Causes of high bearing temperatures are typically due to these conditions. See Motor Load Force Ratings on page 40 and the list that follows for additional information.

- Contaminated grease
- Insufficient or excessive amounts of grease
- Incorrect grease
- Excessive load or thrust due to misalignment or motor overload
- Loose bearings
- Bearing failure
- Excessive ambient temperature

For guidance on lubrication intervals for ball bearings and roller bearings, see Table 42.

ATTENTION: Lubrication of the bearings is limited to models that are configured with grease fittings. All motor maintenance, including disassembly of the motor to repack a bearing, must be performed by an authorized Rockwell Automation service personnel.

Table 42 - Lubrication Intervals for Motors with a Regreasable Bearing(1)

Motor Cat. No.	Operating Speed						Bearings		
	500 rpm	1000 rpm	1500 rpm	2000 rpm	2500 rpm	3000 rpm	DE (2)	DE (3)	NDE (4)
	Lubrication Interval (in operating hours)						Grease Quantity (grams)		
MMA-B080*xxx*	6000 (3)(5) 8000 (6)	4500 (3)(5) 6500 (6)	3500 (3)(5) 5500 (6)	2700 (3)(5) 4700 (6)	2000 (3)(5) 4000 (6)	1500 (3)(5) 3500 (6)	4	4	–
MMA-B100*xxx*							6	6	–
MMA-B132*xxx*							12	12	10
MMA-B160*xxx*							35	35	30
MMA-B180*xxx*							40	40	35
MMA-B225*xxx*	6000 (2)(4) 4000 (3)(5)	4500 (2)(4) 2500 (3)(5)	3500 (2)(4) 2000 (3)(5)	2700 (2)(4) 1500 (3)(5)	2000 (2)(4) 1000 (3)(5)	1500 (2)(4) 1000 (5)	75	75	55

(1) DE bearing catalog numbers: B, D, F, J, K, L, N, Q, and S; NDE bearing catalog numbers: N and Q.
(2) Drive end ball bearing.
(3) Drive end roller bearing.
(4) Non-drive end ball bearing.
(5) For motors equipped with high speed ball bearings.
(6) For motors equipped with regreasable bearings.

Table 43 - Type of Grease for Ball Bearings and Roller Bearings

Manufacturer	Type	Composition	Color
Petro-Canada	Peerless LLG	Mineral calcium sulphonate	Red
Petro-Canada	Precision XL EMB	Mineral lithium complex	Blue
Brugarolas	G.Beslux Komplex M-2	Mineral with polyurea	Cream
Lubcon	Turmosgrease N502	Mineral with polyurea	Yellow
Shell	Alvania R3	Mineral with lithium	Brown

Table 44 - Type of Grease for High Speed Ball Bearings

Manufacturer	Type	Composition	Color
SKF	LGHP2	Mineral di-urea	Blue
Lubcon	Thermoplex 2 TML	Mineral with lithium	Cream
Kluber	Isoflex LDS 18 Special A	Mineral with lithium	Yellow

Lubrication Procedures

Where applicable, the motor design has a positive lubrication system for routing new grease directly into the bearing. Follow these steps to lubricate the motor:

ATTENTION: It is recommended to perform lubrication procedures with a warm motor and stationary shaft. Failure to observe these precautions could result in personal injury.

1. Locate the grease fitting on the motor and/or in the side access panel.
2. Remove the grease drain plug opposite the grease inlet.

Figure 16 - Grease Port Locations

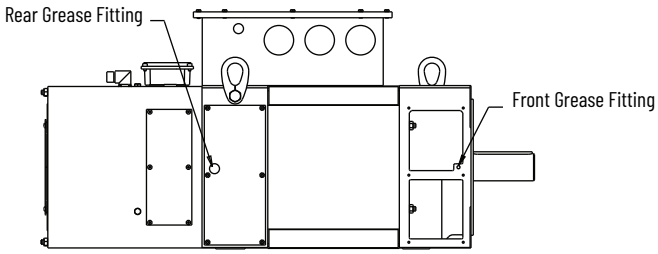

3. Use a manual grease gun to pump in the recommended amount of grease.
4. Replace any temporary grease fittings that were installed, and then wipe away any excess grease.
5. Reattach the grease drain plug.
6. Attach the rear access panels that were removed. See Table 45 for torque values.

Table 45 - Rear Access Panel Torque Specifications

Motor Cat. No.	Screw Type	Torque N•m (lb•in)
MMA-B080*xxx*	M4	2.5 (22.13)
MMA-B100*xxx*		
MMA-B132*xxx*	M5	4.0 (35.40)
MMA-B160*xxx*		
MMA-B180*xxx*		
MMA-B225*xxx*	M6	6.0 (53.10)

Brush for Shaft Currents

Some motors are equipped with a shaft grounding brush (bearings option) or Aegis rings (special option). Their purpose is to close the electric circuit existing between the rotor and the motor structure, which allows the shaft voltage discharge currents to pass through the brush and not the bearings. Normally, the brush is installed on the non-drive end (NDE) side of the motor. A periodic check should take place every 8000 working hours. Replace the brush when there is approximately 5 mm (0.2 in.) of conductive carbon brush remaining.

Brush size specifications for replacement: 5 x 8 x 20 mm (0.2 x 0.31 x 0.79 in.)

ATTENTION: This level of service must be done at an authorized Rockwell Automation Service Center.

Motor Shaft and Shaft Key

Motors come with a smooth or keyed shaft. For motor shafts that contain a key, see Table 47 for the dimensions. All other motor shaft dimensions are listed in Table 46.

Shaft Dimensions

For additional information on motor shaft dimensions, see Motor Dimensions.

Table 46 - Shaft Dimensions

Motor Cat. No.	Stator Cat. No.	Standard Shafts (Cat. No. A,B,C,D,E,F)		Increased Shafts (Cat. No. G,H,J,K,L,M)		Reduced Shafts (Cat. No. N,P,Q,R,S,T)	
		Diameter [D] mm (in.)	Length [E] mm (in.)	Diameter [D] mm (in.)	Length [E] mm (in.)	Diameter [D] mm (in.)	Length [E] mm (in.)
MMA-B080*xxx*	A, B	24 (0.94)	50 (1.97)	–	–	–	
	C	28 (1.10)	60 (2.36)			24 (0.94)	50 (1.97)
	D, E	24 (0.94)	50 (1.97)			–	
MMA-B100*xxx*	A	38 (1.50)	80 (3.15)			28 (1.10)	60 (2.36)
	B, C, D, E	38 (1.50)	80 (3.15)			–	
MMA-B132*xxx*	A, B, C	42 (1.65)	110 (4.33)	48 (1.89)	110 (4.33)	38 (1.50)	80 (3.15)
	D, E	48 (1.89)	110 (4.33)	–		42 (1.65)	110 (4.33)
MMA-B160*xxx*	A, B	55 (2.17)	110 (4.33)	60 (2.36)	140 (5.51)	48 (1.89)	110 (4.33)
	C, D	55 (2.17)	110 (4.33)	60 (2.36)	140 (5.51)	–	–
MMA-B180*xxx*	A	60 (2.36)	140 (5.51)	–			
	B, C, D	65 (2.56)	140 (5.51)	–			
MMA-B225*xxx*	A, B, C	75 (2.95)	140 (5.51)	85 (3.35)	170 (6.69)		
	D, E	85 (3.35)	170 (6.69)	–			

Shaft Key Removal and Installation

Shaft keys are dimensioned for an interference fit, slightly larger than the opening. An interference fit provides a secure and rigid mating connection.

ATTENTION: Do not strike the shaft, key, couplings, or pulleys with tools during installation or removal. Damage can occur to the motor bearings and the feedback device if sharp impact to the shaft is applied during installation of couplings and pulleys, or a shaft key. Failure to observe these safety procedures could result in damage to the motor and its components.

Table 47 - Shaft Key Dimensions

Motor Cat. No.	Stator Cat. No.	Standard Shafts (Cat. No. A, B, C, D)		Increased Shaft (Cat. No. G, H, J, K)		Reduced Shaft (Cat. No. N, P, Q, R)	
		Key Width [F] mm (in.)	Shaft Width Over Key [GA] mm (in.)	Key Width [F] mm (in.)	Shaft Width Over Key [GA] mm (in.)	Key Width [F] mm (in.)	Shaft Width Over Key [GA] mm (in.)
MMA-B080*xxx*	A, B	8 (0.31)	27 (1.06)	–	–	–	
	C	8 (0.31)	31 (1.22)			8 (0.31)	27 (1.06)
	D, E					–	
MMA-B100*xxx*	A	10 (0.38)	41 (1.61)			8 (0.31)	31 (1.22)
	B, C, D, E					–	
MMA-B132*xxx*	A, B, C	12 (0.47)	45 (1.77)	14 (0.55)	51.5 (2.03)	10 (0.38)	41 (1.61)
	D, E	14 (0.55)	51.5 (2.03)			12 (0.47)	45 (1.77)
MMA-B160*xxx*	A, B	16 (0.63)	59 (1.97)	18 (0.71)	64 (2.52)	14 (0.55)	51.5 (2.03)
	C, D					–	–
MMA-B180*xxx*	A	18 (0.71)	64 (2.52)	–			
	B, C, D		69 (2.72)	–			
MMA-B225*xxx*	A, B, C	20 (0.79)	79.5 (3.13)	22 (0.86)	90 (3.54)		
	D, E	22 (0.86)	90 (3.54)	–			

To Remove a Shaft Key

Lift the key by gripping it with a pliers or similar tool. Then apply leverage to the key with a screwdriver.

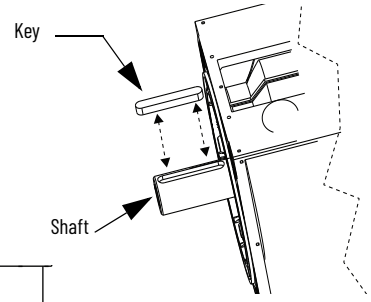

To Install a Shaft Key

1. Verify that the replacement key matches the keyway in the shaft and the mating mechanical connection (for example, a coupling or pulley) before proceeding.
2. To help prevent movement, support the motor and shaft.
3. Align the front of the key with the front of the shaft.

Figure 17 - Shaft Key Alignment

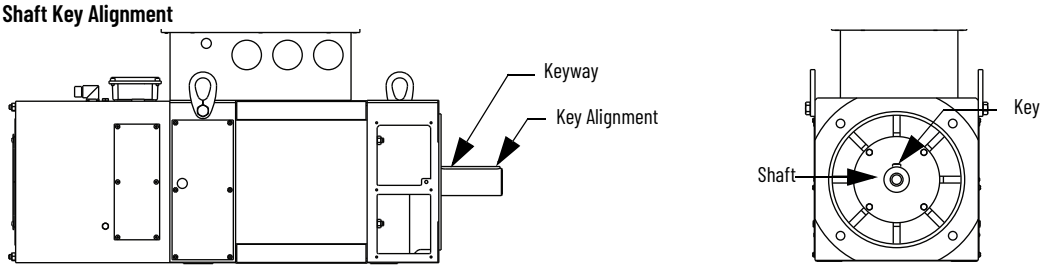

4. Apply a constant force across the exposed surface of the key with a controlled press device (for example, a screw clamp) to push the key into the shaft.
5. Verify the proper fit by visually inspecting the motor shaft and key.
6. Check the motor shaft and surrounding surfaces.

IMPORTANT Verify that the motor shaft, faceplate, bearing bore, and keyway are free of nicks, burrs, grooves, or spiral machine marks. Remove any nicks, burrs, or surface damage.

Blower Specifications, Replacement, and Repositioning

All Kinetix MMA main motors can be ordered with an axial blower option.

Table 48 - Axial Blower with 1-PH Input Voltage

Motor Cat. No.	Power Supply (V AC)/Hz	Max Current (A)	Power (kW)	Max Airflow (m^3/min)	Max Pressure (Pa)	Blower Kit (1)
MMA-B080*xxx*	1-PH; 220...230V AC; 50/60 Hz	0.31	0.045	6	70	MM-BLWR-080-2B-A
MMA-B100*xxx*	1-PH; 200...240V AC; 50/60 Hz	0.8	0.085	11	630	MM-BLWR-100-22-A MM-BLWR-100-BB-A
MMA-B132*xxx*	1-PH; 200...240V AC; 50/60 Hz	1.35	0.169	16	1100	MM-BLWR-132-22-A MM-BLWR-132-BB-A
MMA-B160*xxx*	1-PH; 200...277V AC; 50/60 Hz	2.2	0.5	36	1500	MM-BLWR-160-22-A MM-BLWR-160-BB-A

(1) The '22' indicates that there is no brake, MM-BLWR-*xxx*-**22**-x. The 'BB' indicates the brake only configuration, MM-BLWR-*xxx*-**BB**-x.

Table 49 - Axial Blower with 3-PH Input Voltage

Motor Cat. No.	Power Supply (V AC)/Hz	Max Current (A)	Power (kW)	Max Airflow (m^3/min)	Max Pressure (Pa)	Blower Kit (1)
MMA-B160*xxx*	3-PH; 380...480V AC; 50/60 Hz	1.10	0.75	35	14.50	MM-BLWR-160-22-B MM-BLWR-160-BB-B
MMA-B180*xxx*	3-PH; 380...480V AC; 50/60 Hz	1.80	1.18	62	1450	MM-BLWR-180-22-B MM-BLWR-180-BB-B
MMA-B225*xxx*	3-PH; 380...480V AC; 50/60 Hz	1.80	1.14	91	1000	MM-BLWR-225-22-B MM-BLWR-225-BB-B

(1) The '22' indicates that there is no brake, MM-BLWR-*xxx*-**22**-x. The 'BB' indicates the brake only configuration, MM-BLWR-*xxx*-**BB**-x.

The MMA-B132*xxx* and larger size motors can be ordered with the radial blower option. As a standard configuration, the blower is mounted on the non-drive end (NDE) top side of the motor. This radial blower can be repositioned and mounted on either the right or left side as needed. See Instructions to Reposition or Replace the Radial Blower Assembly.

Table 50 - Radial Blower with 3-PH Input Voltage

Motor Cat. No.	Power Supply (V AC)/Hz	Max Current (A)	Power (kW)	Max Airflow (m^3/min)	Max Pressure (Pa)	Blower Kit (1)
MMA-B132*xxx*	3-PH; 380...420V AC; 50 Hz / 440...480V AC; 60 Hz	0.75	0.25	15	800	MM-BLWR-132-2B-C
MMA-B160*xxx*	3-PH; 380...420V AC; 50 Hz / 440...480V AC; 60 Hz	2.31	1.10	30	1400	MM-BLWR-160-2B-C
MMA-B180*xxx*	3-PH; 380...420V AC; 50 Hz / 440...480V AC; 60 Hz	3.14	1.50	35	1600	MM-BLWR-180-2B-C
MMA-B225*xxx*	3-PH; 380...420V AC; 50 Hz / 440...480V AC; 60 Hz	4.51	2.20	48	1800	MM-BLWR-225-2B-C

(1) The '2B' indicates that the blower kit fits both a brake and non-brake configuration, MM-BLWR-*xxx*-**2B**-x.

Replace, Inspect, and Maintain Blower Filters

SHOCK HAZARD: To avoid an electric shock hazard, verify that the voltage has discharged completely before servicing.

Filter media is made of synthetic fiber and has a corrugated matte to help increase the effectiveness. It must be properly cleaned and maintained to be effective.

Axial Blower Filter

There is no axial filter available. The customer is responsible for any filtering and impacts of airflow that would occur because of an installed blower filter.

Radial Blower Filter

On motors equipped with a filter, periodically inspect, clean, or replace the filter. If a filter is installed, avoid operating a motor without a filter in place. The air filter must always be kept in good working condition. Dirty air filters affect the performance of the motor and may cause overheating and the intervention of the thermal switches.

A clogged air filter is directly related to the degree of impurity of the intake air, and so it is not possible to say what the average time between inspections and cleanings is. Normally, conduct cleaning about every 200 working hours, however, there are cases when the work is required more frequently.

Radial blower filters must be inspected, cleaned, and replaced regularly. Air filters are not provided as a replacement part from Rockwell Automation. Use the information in Table 51 to source a filter. To replace a radial blower filter, follow these instructions:

1. Remove power from the motor and de-energize the system.
2. Loosen the screws that secure the filter to the blower air inlet.
3. Slide the filter out.
4. Clean or replace the filter. See Figure 18.
   - Blow out filter.
     When blowing out the filter, apply compressed air from the internal surface of the filter outward, being careful not to blow the dirt inside the motor. See Figure 18.
   - Replace filter. See Table 51 for filter dimensions.
5. Reinstall filter.
6. Insert and hand-tighten the screws that secure the filter.

Figure 18 - Radial Filter Replacement

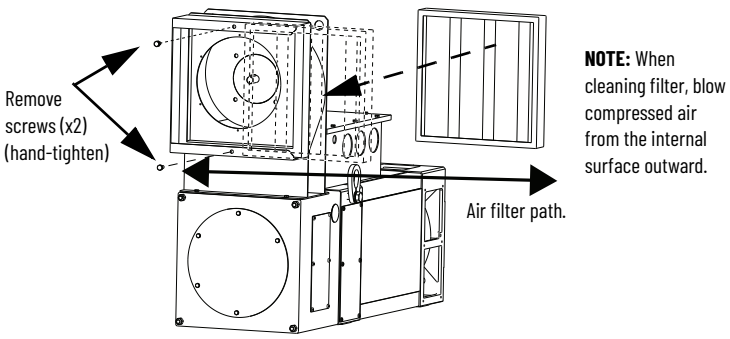

Table 51 - Radial Blower Filter Specifications

Filter Dimensions		
Motor Cat. No.	**Dimensions mm (in.)**	**Filter Folds**
MMA-B132*xxx*	245 x 220 x 48 (9.6 x 8.7 x 1.9)	5
MMA-B160*xxx*	300 x 260 x 48 (11.8 x 10.2 x 1.9)	6
MMA-B180*xxx*	350 x 350 x 48 (13.8 x 13.8 x 1.9)	7
MMA-B225*xxx*	440 x 440 x 48 (17.3 x 17.3 x 1.9)	8

Blower Replacements

All motors ship with an attached blower housing. Depending on your configuration, the blower housing may have an axial blower, a radial blower, or an IC17 adapter shroud attached to it. It is possible to replace a blower housing or to convert between blower configurations in some cases.

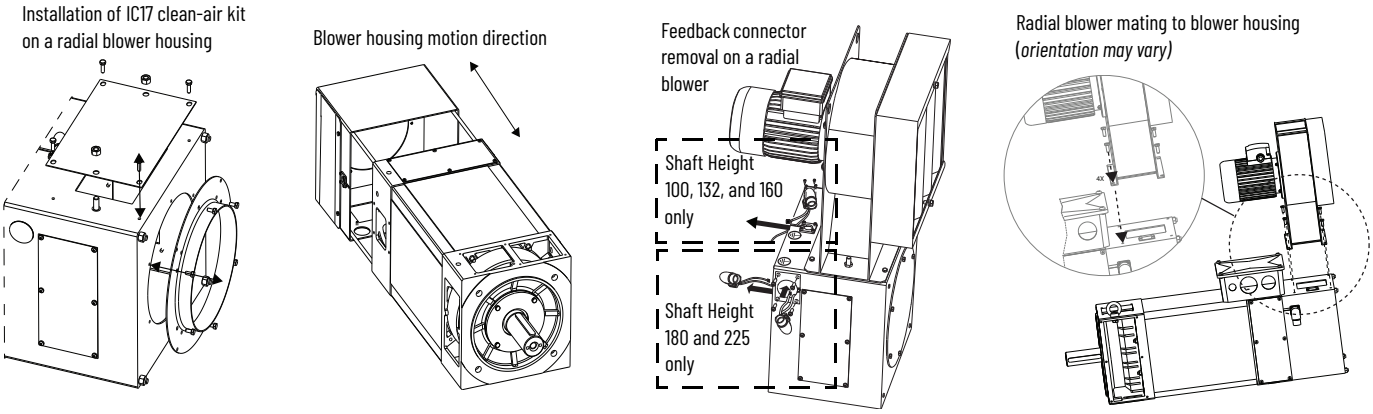

See Blower Conversions for available conversions and procedure references.

To replace a blower housing with the same configuration, use this list as a reference:

- Axial blower to axial blower
  - see Install the IC17 Clean-air Kit (Includes: Replace Axial Blower), step 4.

Do not disconnect the fan or the blower terminals to replace the blower housing.

- Radial blower to radial blower
  - see Instructions to Reposition or Replace the Radial Blower Assembly
- IC17 clean-air to IC17 clean-air
  - see Install the IC17 Clean-air Kit (Includes: Replace Axial Blower), step 6...step 9

ATTENTION: For all blower conversions or replacements, remove incoming power from the motor and the blower. Allow time for any stored energy to discharge.

Blower Conversions

The following are possible blower conversions for axial and radial blowers. To complete the conversion, use the information that follows.

- Axial blower or radial blower to IC17 clean-air option
  - see Install the IC17 Clean-air Kit (Includes: Replace Axial Blower)
- Axial blower to radial blower
  - is not an available conversion
- Radial blower to axial blower
  - see Instructions to Reposition or Replace the Radial Blower Assembly to remove the radial blower; see Install the IC17 Clean-air Kit (Includes: Replace Axial Blower) step 4 for guidance to connect the axial blower
- IC17 clean-air option to axial blower
  - see Install the IC17 Clean-air Kit (Includes: Replace Axial Blower) step 8 for guidance to remove cover from blower housing; see Install the IC17 Clean-air Kit (Includes: Replace Axial Blower) step 4 for guidance to connect the axial blower
- IC17 clean-air option to radial blower
  - see Install the IC17 Clean-air Kit (Includes: Replace Axial Blower) step 8 for guidance to remove cover from blower housing; see Instructions to Reposition or Replace the Radial Blower Assembly, start at step 9 to install and connect the radial blower

Table 52 - Blower Conversion Options

Possible Conversions		Shaft Height					
Initial Option	**Converts To**	**080**	**100**	**132**	**160**	**180**	**225**
Axial blower	IC17 clean-air	–	Yes				
Radial blower	IC17 clean-air	–		No		Yes	
Axial blower	Radial blower	No					
Radial blower	Axial blower	–		No (1)			
IC17 clean-air	Axial blower	–	Yes			No	
IC17 clean-air	Radial blower	–	No			No (2)	

(1) This conversion requires extension rods that are not available as a spare part. See Table 57 on page 55 for dimensions and specifications.

(2) This conversion requires the radial blower cover that is not available as a spare part. Dimensions and specifications can be found in the Knowledgebase article: Kinetix MMA Frequently Asked Questions, for additional information. See also Figure 21 on page 53.

IMPORTANT The radial blower is delivered in the top mounted position. If an alternate orientation is required, only an experienced technician can install, remove, or reposition the blower. Complete these tasks on a workbench and not in a mounted position. Replacement of the blower housing requires the torque specifications as listed in Table 53.

Instructions to Reposition or Replace the Radial Blower Assembly

Perform this procedure on a workbench. Follow steps for all shaft heights unless otherwise indicated.

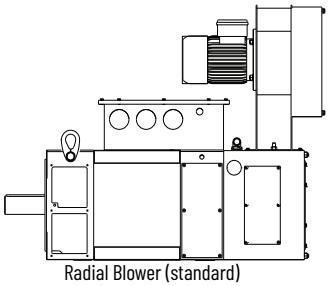

Radial Blower (standard)

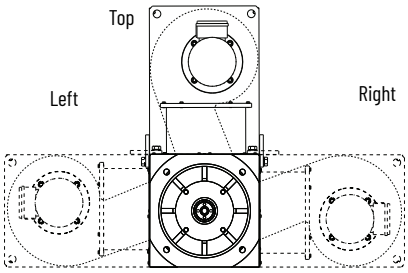

Radial Blower with Alternate Orientations

ATTENTION: The blower screws cause a height differential between the motor and a repositioned blower. When repositioning the blower to the left or right, you may need to add a shim under the motor and level it.

1. Remove incoming power from the motor and the blower. Allow time for any stored energy to discharge.
2. Use shims or riser blocks to allow clearance for lifting straps, then place the motor on a workbench or other suitable work surface.
3. Remove the four sets of hardware (nut, screw, spring washer, and/or washer) that secure the blower to the motor. See Table 53 on page 52 for additional information. Keep the hardware for step 14.
4. Attach a crane or other lifting assistant to the blower assembly.

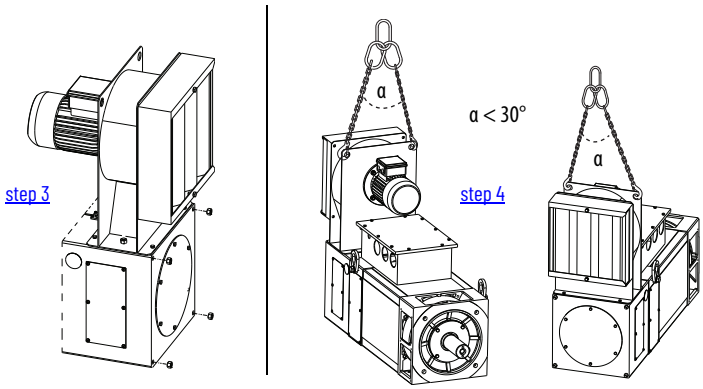

IMPORTANT See Instructions to Lift on page 15 for additional information on blower assembly weight.

Do not lift the blower assembly during this step - it may be necessary to adjust the tension on the extension rods to slide the blower assembly away from the motor. See step 8.

ATTENTION: For blower weight, see Table 7 on page 16. It is recommended to use two people or a crane to remove the blower assembly from the motor. Blower weight exceeds 22.67 kg (50 lbs) in all cases. If using the crane for assistance, exercise caution and diligence: do not to bend, twist, or strain the extension rods.

5. Disconnect and remove the four screws that secure the feedback connector to the adapter plate. See Remove and Install the Feedback Connector for additional information.
   - For shaft height 180 and 225 only, remove the four screws that secure the adapter plate to the blower housing, then slide the feedback connector and wires through the opening and into the blower housing.
6. Slide the blower assembly out approximately 8 cm (3 in.).
7. Disconnect the feedback connector ground wire inside of the blower housing.

IMPORTANT Secure the feedback cables and ground wire during this procedure to avoid damage.

8. Slide the blower assembly away from the motor and off the extension rods.
9. Lift, rotate, and move the blower assembly into the new orientation.

ATTENTION: The blower motor is not balanced when lifted. Take precautions to avoid swinging, personal injury, or equipment damage. See also step 4.

ATTENTION: The blower screws cause a height differential between the motor and a repositioned blower. When repositioning the blower to the left or right, you may need to add a shim under the motor and level it.

Figure 19 - Feedback Connector and Ground Location

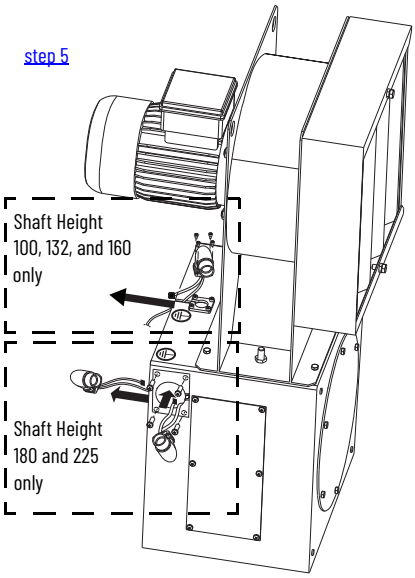

10. Align the extension rods with the guide holes in the blower assembly. Slide the blower assembly towards the motor until approximately 8 cm (3 in.) of the extension rod remains.

Leave space to reattach the feedback connector and ground wires.

ATTENTION: Avoid equipment damage. Use of a riser block or shim is recommended to hold the blower level. If using the crane for assistance, exercise caution and diligence: do not to bend, twist, or strain the extension rods. See Replace Extension Rods for replacement information.

11. Attach the feedback connector. See Figure 19 for reference. Follow steps for all shaft heights unless otherwise indicated.
    a. Insert the feedback connector wires through the feedback connector slit in the adapter plate.
       - For shaft height 180 and 225 only, ease the feedback connector through the openings and out of the blower housing, then put the wires through the slit in the adapter plate. Attach the adapter plate to the blower housing. Torque to 2 N•m (17.70 lb•in).
    b. Attach the feedback connector to the adapter plate. Torque to 1.1 N•m (9.74 lb•in).
    c. Connect the feedback connector ground wire to the inside of the blower housing.
12. Verify that all wires are secure and clear for operation.
13. Slide the blower assembly the remaining distance toward the motor.
14. Attach the four sets of hardware from step 3 that secure the blower to the motor. Torque to the values in the table that follows:

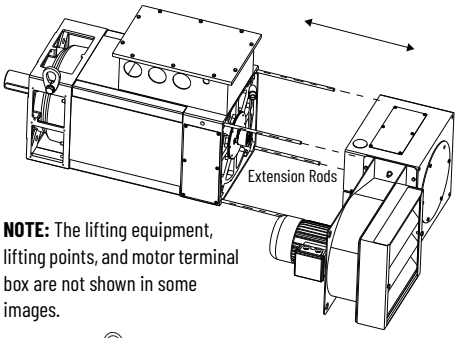

NOTE: The lifting equipment, lifting points, and motor terminal box are not shown in some images.

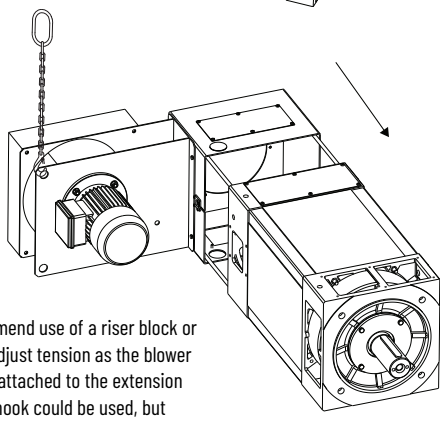

NOTE: Recommend use of a riser block or shim to help adjust tension as the blower assembly is reattached to the extension rods. A lifting hook could be used, but exercise caution and diligence: do not to bend, twist, or strain the extension rods.

Table 53 - Radial Blower Housing Torque

Motor Cat. No.	Screw Type	Torque N•m (lb•in)
MMA-B132*xxx*	M8	9 (79.66)
MMA-B160*xxx*	M8	9 (79.66)
MMA-B180*xxx*	M10	25 (221.27)
MMA-B225*xxx*	M16	50 (442.54)

Install the IC17 Clean-air Kit (Includes: Replace Axial Blower)

ATTENTION: You are not permitted to disassemble the mechanical components of the motor; the exceptions are: the blower, shaft seal, and the standard encoder replacement procedures. All other motor maintenance must be performed by a Rockwell Automation authorized service center.

ATTENTION: Only qualified personnel familiar with three-phase AC asynchronous motors and associated machinery can plan or implement the installation, startup, and subsequent maintenance of the system. Failure to comply can result in personal injury and/or equipment damage.

Instructions to replace, inspect, and maintain the IC17 clean-air kit follow. See Table 55 for specific information on required shroud types.

For radial blowers, the IC17 clean-air conversion kit is only designed for shaft height 180 and 225.

1. Remove incoming power from the motor and the blower. Allow time for any stored energy to discharge.
2. Use shims or riser blocks to allow clearance for lifting straps, then place the motor on a workbench or other suitable work surface.
3. If you have a radial blower (shaft height 180 or 225), detach the blower assembly.
   a. Attach a crane or other lifting assistant securely to the blower assembly. Attach to the hooks or bolts to the lifting holes on the blower assembly.

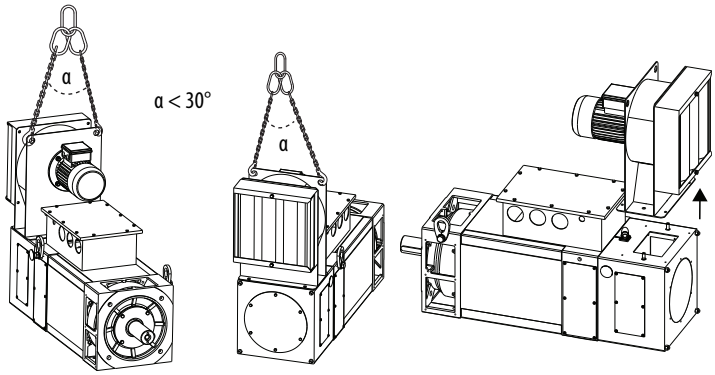

IMPORTANT See Instructions to Lift on page 15 for additional information.

ATTENTION: For blower weight, see Table 7 on page 16. It is recommended to use two people or a crane to remove the blower assembly from the blower housing. Blower weight exceeds 22.67 kg (50 lbs) in all cases.

b. Remove the sets of hardware that hold the blower assembly to the blower housing. See step 8 for additional information. Keep the hardware; you use them to attach the cover in step 8.

c. Lift and remove the blower assembly from the blower housing.

ATTENTION: The blower assembly is not balanced when lifted. Take precautions to avoid swinging, personal injury, or equipment damage.

4. If you have an axial blower, disconnect and remove the fan. See Table 54 for screw types and torque values.
   a. Remove the four nuts that secure the rear blower cover to the motor.
   b. Remove the four screws on the blower terminal box and the remove cover.
   c. Disconnect the wires in the blower terminal box. See Table 20 on page 27 for additional information.
   d. Remove the screws that secure the fan to the blower housing.
   e. Reattach the blower terminal box cover using the screws from step b. See Table 54 for torque values.
   f. Remove the four screws on the feedback connector.
   g. Slide the blower housing out approximately 8 cm (3 in.).
   h. Disconnect the ground wire from the spade connector located near the feedback connector inside of the blower housing.
   i. Slide the feedback connector wires through the slit. Secure it to the motor.
   j. Slide the blower housing an additional distance.
   k. Remove the fan and fan nuts from the blower housing.

Figure 20 - Axial blower removal

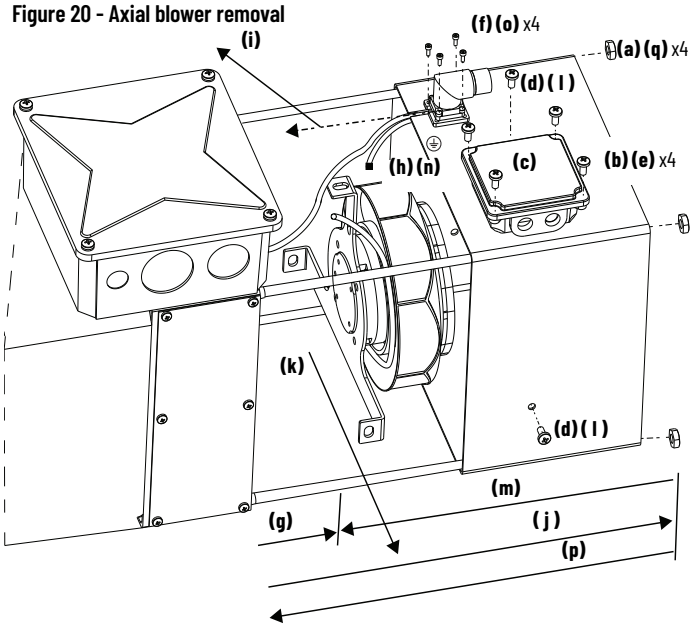

IMPORTANT For shaft height 100 without the brake option, the blower housing is attached by using long bolts that get removed during this procedure. All other shaft heights use extension rods that attach to the motor.

   l. Reattach the fan nuts and screws to the blower housing. See Table 54 for torque values.
   m. Slide the blower housing toward the motor. Stop at approximately 8 cm (3 in.).
   - For shaft height 100 without the brake option, insert the bolts threads into the motor and blower housing.
   n. Reattach the ground wire to the spade connector mentioned in step h.
   o. Reattach the feedback connector by using the screws in step f. See Table 54 for torque values.
   p. Slide the blower housing the remaining distance to the motor. For shaft height 100, reinsert and tighten the threaded bolts. See Table 57 for torque values.
   q. Reattach the four nuts to the rear blower cover that were removed in step a. See Table 54 for torque values.

Table 54 - Axial Blower Torque Values

Step	Motor Shaft Height	Screw/Nut Size	Torque N•m (lb•in)
(a and q) blower cover	SH80 (1) and SH100	M5	3 (26.55)
	SH132 and SH160	M8	9 (79.66)
	SH180	M10	25 (221.27)
	SH225	M16	50 (442.54)

Step	Motor Shaft Height	Screw/Nut Size	Torque N•m (lb•in)
(d and l) fan screws	all	Phillips	Hand-tighten
(b and e) blower terminal box		Phillips	Hand-tighten
(f and o) feedback connector		M3	1.1 (9.74)

(1) There is no IC-17 clean-air option for shaft height 80. It is included in this table for direct axial to axial blower housing replacement procedures only.

5. Remove the blower guard or blower cover from the rear side of the motor by removing the screws. See Table 55 for quantity and type.

Figure 21 - Blower Housing Guard and Cover

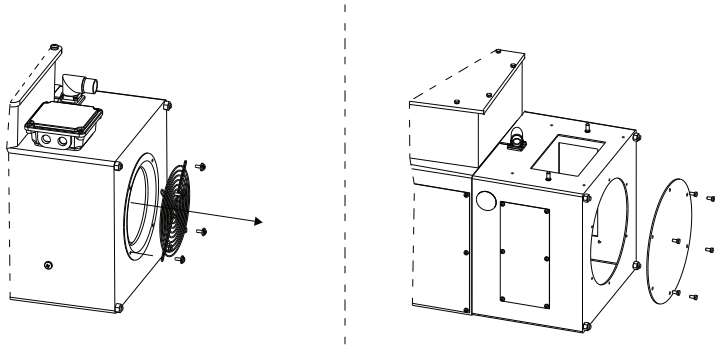

Axial Blower

Radial Blower

6. Select the applicable IC17 clean-air adapter shroud:

Table 55 - IC17 Clean-air Kit Catalogs and Specifications

Motor Cat. No.	IC17 Clean-air Kit Catalog	Recommended Airflow (m^3/min)	Recommended Pressure (Pa)	Max Air Temperature °C (°F)	Blower Type	Screw Type	Screw Quantity	Torque N•m (lb•in)
MMA-B100*xxx*	MM-IC17-100-2B-D	11	630	40 (104)	Axial	M4	4	2 (17.07)
MMA-B132*xxx*	MM-IC17-132-2B-D	15	800			M4		2 (17.07)
MMA-B160*xxx*	MM-IC17-160-2B-D	30	1400			M5		4 (35.40)
MMA-B180*xxx* (1)	MM-IC17-180-2B-D	35	1600		Axial	M5	4	4 (35.40)
					Radial	M6	6	7 (61.96)
MMA-B225*xxx* (1)	MM-IC17-225-2B-D	48	1800		Axial	M5	4	4 (35.40)
					Radial	M6	6	7 (61.96)

(1) Axial blowers do not use the blower assembly replacement cover that comes as part of the IC17 clean-air kit.

7. Install the IC17 adapter shroud. Tighten the screws to the torques listed in Table 55.

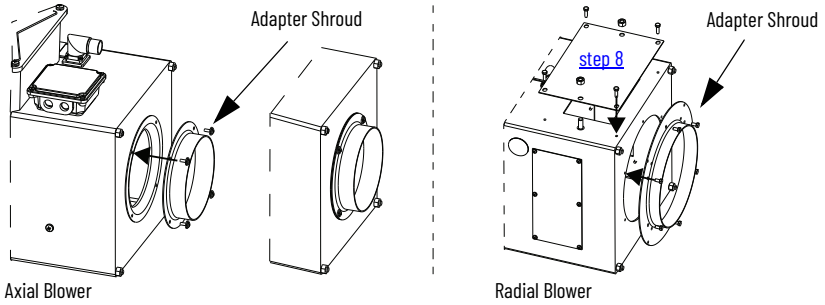

8. For radial blowers, attach the blower housing cover using the screws from step 3. See the table that follows for additional information:

Table 56 - Radial Blower Housing Cover

Motor Cat. No.	Screw Type	Nut Quantity	Screw Quantity	Torque N•m (lb•in)
MMA-B180*xxx*	M6	2	4	5 (44.25)
	M10			25 (221.27)
MMA-B225*xxx*	M8	2	6	15 (132.76)
	M12			42 (371.73)

9. Attach duct work (not supplied) to the adapter shroud.

Replace Extension Rods

Extension rods are not available as a replacement part from Rockwell Automation. See Table 57 for dimensions and specifications. If the extension rods need to be replaced, follow these instructions.

1. Use the jam nut or double nut wrenching technique to remove the extension rods from the motor frame.

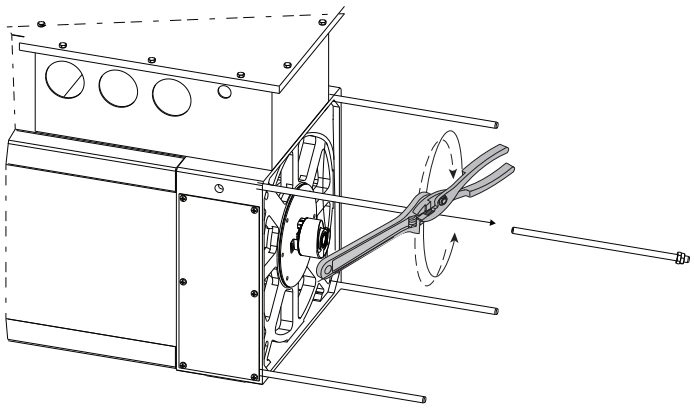

2. Install the new extension rods using the jam nut or double nut wrenching technique. SeeTable 57 for torque values.

Figure 22 - Extension Rod Dimensions

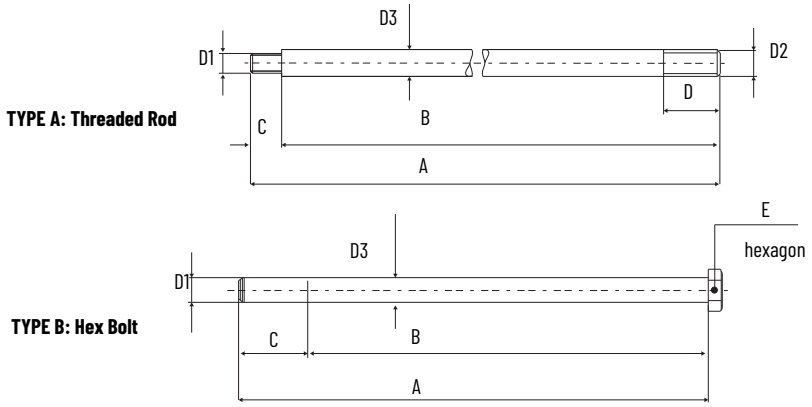

Table 57 - Extension Rod Specifications

Motor Cat. No.	Blower Option	Rod Type	Torque N•m (lb•in)	Bolt Type		Dimension mm (in.)					
				D1	D2 (1)	D3	A	B	C	D	E
MMA-B080*xxx*	Axial blower	B	3 (26.55)	M5	–	5 (0.20)	110 (4.33)	90 (3.54)	20 (0.79)	–	8 (0.31)
MMA-B100*xxx*							175 (6.89)	145 (5.07)	30 (1.18)		
MMA-B132*xxx*		A	9 (79.66)	M6	M8	8 (0.31)	190 (7.48)	180 (7.09)	10 (0.39)	18 (0.71)	–
MMA-B160*xxx*							300 (11.81)	290 (11.42)			
MMA-B180*xxx*			25 (221.27)	M10	M10	15 (0.59)	380 (14.96)	365 (14.37)	15 (0.59)	20 (0.79)	
MMA-B225*xxx*			50 (442.54)	M16		20 (0.79)	445 (17.52)	425 (16.73)	20 (0.79)	30 (1.18)	
MMA-B080*xxx*	Axial blower + brake	B	3 (26.55)	M5	–	5 (0.20)	195 (7.68)	175 (6.89)		18 (0.71)	8 (0.31)
MMA-B100*xxx*		A			M5		260 (10.24)	245 (9.65)	15 (0.59)	15 (0.59)	–
MMA-B132*xxx*			9 (79.66)	M6	M8	8 (0.31)	315 (12.40)	305 (12.01)	10 (0.39)	18 (0.71)	
MMA-B160*xxx*							455 (17.91)	445 (17.52)			
MMA-B180*xxx*			25 (221.27)	M10	M10	15 (0.59)	520 (20.47)	505 (19.88)	15 (0.59)	20 (0.79)	
MMA-B225*xxx*			50 (442.54)	M16	M16	20 (0.79)	605 (23.82)	585 (23.03)	20 (0.79)	30 (1.18)	
MMA-B132*xxx*	Radial blower	A	9 (79.66)	M6	M8	8 (0.31)	175 (6.89)	165 (6.50)	10 (0.39)	18 (0.71)	
MMA-B160*xxx*							210 (8.27)	200 (7.87)			
MMA-B180*xxx*			25 (221.27)	M10	M10	15 (0.59)	300 (1181)	285 (11.22)	15 (0.59)	20 (0.79)	
MMA-B225*xxx*			50 (442.54)	M16	M16	20 (0.79)	345 (13.58)	325 (12.80)	20 (0.79)	30 (1.18)	
MMA-B132*xxx*	Radial blower + brake	A	9 (79.66)	M6	M8	8 (0.31)	230 (9.06)	220 (8.66)	10 (0.39)	18 (0.71)	
MMA-B160*xxx*							260 (10.24)	250 (9.84)			
MMA-B180*xxx*			25 (221.27)	M10	M10	15 (0.59)	300 (11.81)	285 (11.22)	15 (0.59)	20 (0.79)	
MMA-B225*xxx*			50 (442.54)	M16	M16	20 (0.79)	345 (13.58)	325 (12.80)	20 (0.79)	30 (1.18)	

(1) A torque value is not required for the D2 dimension.

Encoders

All motors come with an encoder installed. If you need to replace your encoder, see the Catalog Number Explanation on page 4 and the Motor Nameplate on page 3 to determine your encoder type. Contact your local Rockwell Automation sales representative to reorder. The encoder replacement kit includes the motor feedback connector, the necessary wiring, and harnessing.

Incremental Encoder Catalog Number Explanation

The Kinetix MMA Asynchronous Main Motor has one 2048 incremental encoder option, MMA-ENC-L2.

Absolute Encoder Catalog Number Explanation

The Kinetix MMA Asynchronous Main Motor has several absolute encoder options. Each motor style and motor function requires a specific encoder. See the Encoder Catalog Number Explanation that follows for specific information.

MMx-ENC-x-xxx-x-xx-xx-x-x-x

a b c d e f g h i j

(a) Motor Type
MMA = Asynchronous Main Motor

(b) Encoder Designator
ENC = Encoder Designator

(c) Voltage Class
B = 400V AC

(d) Frame Size
080 = Shaft height 80 mm
100 = Shaft height 100 mm
132 = Shaft height 132 mm
160 = Shaft height 160 mm
180 = Shaft height 180 mm
225 = Shaft height 225 mm

(e) Stator Length
A, B, C, D, or E

(f) Rated Speed (@ Rated V AC)
06 = 580 rpm
10 = 1000 rpm
15 = 1500 rpm
18 = 1800 rpm
22 = 2200 rpm
26 = 2600 rpm

(j) Bearings
A = All deep groove ball bearings
J = All roller bearings
M = All high speed bearings [9]

(i) Blower
A = Axial blower 1-PH
B = Axial blower 3-PH [5]
C = Radial blower 3-PH
D = IC17 clean-air option (motor prepared without blower) [8][7]

(h) Brakes *(Maximum motor speed (rpm) is limited by the brake selection.)*
2 = No brake (standard)
C = Holding brake,16 N•m, 24V DC, 4000 rpm [1]
D = Holding brake, 80 N•m, 24V DC, 3600 rpm [2]
E = Holding brake, 150…200 N•m, 24V DC, 3600 rpm [3]
F = Holding brake, 260…400 N•m, 24V DC, 3600 rpm [4]
G = Holding brake, 400…600 N•m, 24V DC, 3000 rpm [5]
H = Holding brake, 1440 N•m, 400V AC, 2300 rpm max [6]
J = Holding brake, 2400 N•m, 400V AC, 2300 rpm max [6]

(g) Feedback Type
L2 = 2048 ppr, TTL incremental encoder
S1 = 1024 sin/cos, absolute single-turn encoder (Hiperface protocol)
S2 = 1024 sin/cos, absolute single-turn encoder, SIL 2/PLd rated (Hiperface protocol)
S3 = 2048 sin/cos, absolute single-turn encoder (EnDat protocol)
S4 = 25-bit absolute single-turn encoder (EnDat protocol)
M1 = 1024 sin/cos, absolute multi-turn encoder (Hiperface protocol)
M2 = 1024 sin/cos, absolute multi-turn encoder SIL 2/PLd rated (Hiperface protocol)
M3 = 2048 sin/cos absolute multi-turn encoder (EnDat protocol)
M4 = 25-bit absolute multi-turn encoder (EnDat protocol)

Note	Description
1	Shaft height 80 only
4	Shaft heights 132 and 160 only
7	IC17 clean-air option cannot come cURus certified

Note	Description
2	Shaft height 100 only
5	Shaft heights 160, 180, and 225 only
8	Not available for shaft heights 80 and 100

Note	Description
3	Shaft height 132 only
6	Shaft height 225 only
9	Not available for shaft height 80

Replace Encoder

Instructions to replace the standard encoders follow; safety encoders are not part of this procedure. See Safety Encoders for replacement details.

1. Remove incoming power from the motor and the blower. Allow time for any stored energy to discharge.
2. Follow Instructions to Reposition or Replace the Radial Blower Assembly step 1…8 to remove your radial blower or Install the IC17 Clean-air Kit (Includes: Replace Axial Blower) step 4: a and f…j to remove your axial blower.

- For both blower types, do not fully remove the blower housing from the extension rods.
- For axial blowers, do not disconnect the blower or remove the fan as part of the standard encoder replacement procedure.
- For radial blowers, do not remove the blower from the blower housing as part of the standard encoder replacement procedure.

Encoders S1, S3, S4, M1, M3, and M4

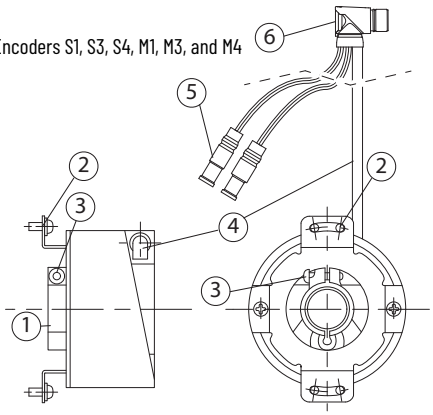

Encoder Diagram Call-out Descriptions

#	Description
1	Encoder
2	Mounting hardware (x4)
3	Shaft clamp
4	Encoder harness
5	Thermostat connector
6	Feedback connector

3. Remove the encoder.
   a. For encoders S1, S3, S4, M1, M3, and M4
      - Loosen shaft-clamp screw
      - Remove the four mounting hardware screws
   b. For encoder L2
      - Loosen shaft-clamp screw
      - Remove single fixed-arm screw
4. Remove encoder from motor shaft.
5. Disconnect the thermostat connectors from the motor feedback cable.
6. Install the new encoder onto the motor shaft and insert the mounting screws.
   Torque per the table that follows:

Encoder Cat. No.	Screw Type	Screw Quantity	Torque N•m (lb•in)
S1, M1	M3	4	1.2 (10.62)
S3, S4, M3, M4		4	1 (8.85)
L2	M4	1	1.5 (13.28)

7. Tighten the shaft-clamp screw.
   Torque per the table that follows:

Encoder Cat. No.	Screw Type	Torque N•m (lb•in)
S1, M1	TX10	1.1 (9.74)
S3, S4, M3, M4	TX8	
L2	TX10	

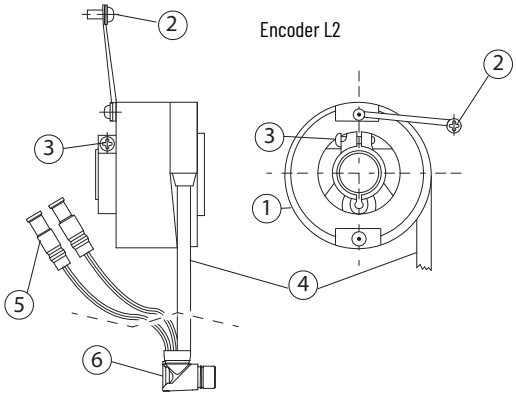

Encoder Diagram Call-out Descriptions

#	Description
1	Encoder
2	Single fixed-arm screw
3	Shaft clamp
4	Encoder harness
5	Thermostat connector
6	Feedback connector

ATTENTION: The encoder shaft clamp can break if overtightened. A broken shaft clamp could cause unexpected motor shaft rotation and corresponding machine motion, due to loss of encoder feedback. Failure to observe safety procedures could result in personal injury or damage to the motor and other equipment.

8. Use the existing motor cable clamps to attach the encoder harness to the screws on the motor plate.
9. Reconnect the thermostat connectors to the motor feedback cable.
10. Follow the instructions in Instructions to Reposition or Replace the Radial Blower Assembly step 10...14 to install your radial blower or Install the IC17 Clean-air Kit (Includes: Replace Axial Blower) step 4: m...q to install your axial blower and the feedback connector.

ATTENTION: During reassembly, verify that the ground wire for the motor feedback connector is properly attached. See Figure 19 on page 51 and Figure 20 on page 53 for additional information, the ground spade connector is located inside the blower housing near the feedback connector.

Encoders are preprogrammed. See the Additional Resources for the drive user manuals that include information on how to reconnect the encoder to your system.

Safety Encoders

For motors that have an S2 or M2 (SIL 2/PLd rated) safety-rated encoder, the customer is not allowed to replace the encoder.

IMPORTANT Only Rockwell Automation trained personnel, Rockwell Automation approved motor repair center, or certified field service engineer (FSE) shall be allowed to perform the field replacement service on Kinetix MMA main motors with functional safety-rated encoder.

Shaft Seals

Shaft seals are not provided as a replacement part from Rockwell Automation. The customer must supply their own Kinetix MMA main motor shaft seal using the information in Table 58. Shaft seals are made of nitrile and kits should include a lubricant to reduce wear. Consistent and regular inspection is recommended. See Shaft Seal Kits Installation Instructions, publication 2090-IN012 for general guidance on replacing a shaft seal.

IMPORTANT Shaft seals are subject to wear and require periodic inspection and replacement. Replacement is recommended every 3 months, not to exceed 12 months, depending on use.

Table 58 - Shaft Seal Dimensions by Catalog Number

Motor Cat. No.	Dimensions (mm)	Type
MMA-B080*xxx*	30x52x7	Oil seal type A 30x52x7
MMA-B100*xxx*	45x62x8	Oil seal type A 45x62x8
MMA-B132*xxx*	45x72x8	Oil seal type A 45x72x8

Motor Cat. No.	Dimensions (mm)	Type
MMA-B160*xxx*	60x85x8	Oil seal type A 60x85x8
MMA-B180*xxx*	70x85x8	Oil seal type A 70x85x8
MMA-B225*xxx*	90x110x12	Oil seal type A 90x110x12

Environmental Ratings

Table 59 describes the necessary environmental ratings for the Kinetix MMA Asynchronous Main Motor.

Table 59 - Environmental Ratings

Attribute	Value
Temperature, operating	-20...+40 °C (-4...+104 °F)
Temperature, storage	-20...+50 °C (-22...+122 °F)
Relative humidity, storage	5...90% noncondensing
Atmosphere, storage	Noncorrosive
IP rating of motor with shaft seal and use of environmentally sealed cable connectors	Unless explicitly specified all motors shall meet IP54 as defined in IEC 60034-5 (1)
Duty Cycle	Continuous duty according to the CEI 2-3 N 355 - IEC 34-1 standards
Temperature rise	According to the CEI 2- 3 N 355 and IEC 34-1 standards
Altitude	1000 m (3280.84 ft) above sea level
Shock (2)	5 g peak, 30 ms duration
Vibration	0.5 g peak @ 57...2000 Hz

(1) See the Catalog Number Explanation and the Motor Nameplate for your IP rating.
(2) Any shock and vibration application exceeding these specifications can result in premature motor failure. Repetitive acceleration is considered vibration, not intermittent shock.

For different environmental conditions, the power varies according to the following table:

Figure 23 - Derating of Motors in Function of Temperature and Altitude

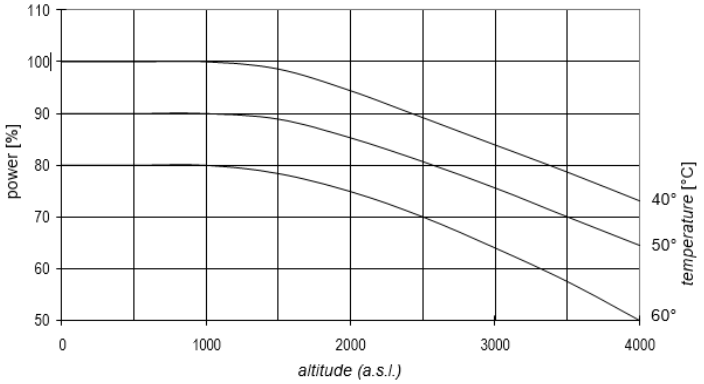

Additional Resources

Resource	Description
Kinetix Rotary Motion Specification Technical Data, publication KNX-TD001	Provides product specifications for Kinetix VPL, VPC, VPF, VPH, VPS, Kinetix MPL, MPM, MPF, MPS; Kinetix TL and TLY, Kinetix RDB, Kinetix MMA, and Kinetix HPK rotary motors.
Kinetix 5700, 5500, 5300, and 5100 Servo Drives Specifications, publication KNX-TD003	Provides product specifications for Kinetix Integrated Motion over EtherNet/IP™, Integrated Motion over Sercos interface, EtherNet/IP networking, and component servo drive families.
Kinetix Rotary and Linear Motion Accessories Specifications Technical Data, publication KNX-TD004	Provides product specifications for Kinetix 2090 motor and interface cables, low-profile connector kits, drive power components, and other servo drive accessory items.
Kinetix 3, 300, 350, 2000, 6000, 6200, 6500, 7000 Servo Drives Specifications, publication KNX-TD005	Provides product specifications for Kinetix Integrated Motion over the EtherNet/IP network (Kinetix 6500 and Kinetix 350), Integrated Motion over Sercos interface (Kinetix 6200, Kinetix 6000, Kinetix 2000, and Kinetix 7000), and component (Kinetix 3) servo drive families
Kinetix Motion Control Selection Guide, publication KNX-SG001	Provides an overview of Kinetix servo drives, motors, actuators, and motion accessories that are designed to help make initial decisions for the motion control products best suited for your system requirements.
Kinetix 5700 Drive Systems Design Guide, publication KNX-RM010	Use this publication when your application includes the Kinetix 5700 drive family and Kinetix VP motors and actuators or any of the other compatible Allen-Bradley® motors and actuators.
Kinetix 5700 Servo Drives User Manual, publication 2198-UM002	This manual provides detailed installation instructions for mounting and wiring your Kinetix 5700 power supplies, single-axis inverters, dual-axis inverters, and accessory modules.
Kinetix 5700 Safe Monitor Functions Safety Reference Manual, publication 2198-RM001	This publication explains how the Kinetix 5700 drives can be used in up to Safety Integrity Level (SIL 3), Performance Level (PLe) applications. It describes the safety requirements, including PFH values and application verification information, and provides information to configure and troubleshoot the Kinetix 5700 drives with safe-stopping and safe-monitoring functions.
Kinetix 7000 High Power Servo Drive User Manual, publication 2099-UM001	This manual provides detailed installation instructions for mounting, wiring, and troubleshooting your Kinetix 7000 drive, and system integration for your drive/motor combination with a Logix controller.
Kinetix 7000 High Power Servo Drive Design Guide, publication KNX-RM007	Use this publication when your application includes the Kinetix 7000 drive family and Kinetix VP motors and actuators or any of the other compatible Allen-Bradley motors and actuators.
PowerFlex 750-Series AC Drives Installation Instructions, publication 750-IN001	This document explains the basic steps for mechanical installation and for connecting incoming power, the motor, and basic I/O to the PowerFlex 750-Series Adjustable Frequency AC drive.
PowerFlex 750-Series I/O, Feedback, and Power Option Modules, publication 750-IN111	This publication covers drive compatibility, jumper settings, terminal designations, and wiring examples for the option modules.
PowerFlex 755 AC Drives Floor Mount Frame 8 and Larger Hardware Service Manual, publication 750-TG001	This manual provides a recommended preventive maintenance schedule, major component test and hardware replacement procedures, and schematic diagrams for floor mount frame 8 and larger PowerFlex 750-Series AC drives.
PowerFlex 750-Series Products with TotalFORCE Control Installation Instructions, publication 750-IN100	This manual provides procedures for the mechanical and electrical installation of PowerFlex 750-Series products with TotalFORCE® control. This manual includes the basic steps to transport, position, and join the product enclosures, to make internal electrical connections, to connect power and the motor, and to wire basic I/O.
PowerFlex 750-Series Products with TotalFORCE Control Hardware Service Manual, publication 750-TG100	This manual provides a recommended preventative maintenance schedule, major component test and hardware replacement procedures, and schematic diagrams for PowerFlex 750-Series products with TotalFORCE control.
Knowledgebase article: Kinetix MMA Frequently Asked Questions	Knowledgebase article that links to additional information about: thermal sensors and switches including use of RTDs, motor power and terminal box wiring, shaft seals, and motor, power, and brake cables.
Industrial Automation Wiring and Grounding Guidelines, publication 1770-4.1	Provides general guidelines for installing a Rockwell Automation® industrial system.
Product Certifications website, rok.auto/certifications.	Provides declarations of conformity, certificates, and other certification details.

You can view or download publications at rok.auto/literature in the hypertext use: https://rok.auto/literature.

Rockwell Automation Support

Use these resources to access support information.

Technical Support Center	Find help with how-to videos, FAQs, chat, user forums, and product notification updates.	rok.auto/support
Knowledgebase	Access Knowledgebase articles.	rok.auto/knowledgebase
Local Technical Support Phone Numbers	Locate the telephone number for your country.	rok.auto/phonesupport
Literature Library	Find installation instructions, manuals, brochures, and technical data publications.	rok.auto/literature
Product Compatibility and Download Center (PCDC)	Download firmware, associated files (such as AOP, EDS, and DTM), and access product release notes.	rok.auto/pcdc

Documentation Feedback

Your comments help us serve your documentation needs better. If you have any suggestions on how to improve our content, complete the form at rok.auto/docfeedback.

Waste Electrical and Electronic Equipment (WEEE)

At the end of life, this equipment should be collected separately from any unsorted municipal waste.

Rockwell Automation maintains current product environmental compliance information on its website at rok.auto/pec.

Rockwell Otomasyon Ticaret A.Ş. Kar Plaza İş Merkezi E Blok Kat:6 34752 İçerenköy, İstanbul, Tel: +90 (216) 5698400 EEE Yönetmeliğine Uygundur

Connect with us.

rockwellautomation.com — expanding **human possibility**®

AMERICAS: Rockwell Automation, 1201 South Second Street, Milwaukee, WI 53204-2496 USA, Tel: (1) 414.382.2000, Fax: (1) 414.382.4444
EUROPE/MIDDLE EAST/AFRICA: Rockwell Automation NV, Pegasus Park, De Kleetlaan 12a, 1831 Diegem, Belgium, Tel: (32) 2 663 0600, Fax: (32) 2 663 0640
ASIA PACIFIC: Rockwell Automation, Level 14, Core F, Cyberport 3, 100 Cyberport Road, Hong Kong, Tel: (852) 2887 4788, Fax: (852) 2508 1846

Allen-Bradley, expanding human possibility, Kinetix, PowerFlex, Rockwell Automation, Studio 5000 Logix Designer, and TotalFORCE are trademarks of Rockwell Automation, Inc.
EtherNet/IP is a trademark of ODVA, Inc.
Trademarks not belonging to Rockwell Automation are property of their respective companies.

Publication MM-IN001B-EN-P - February 2022 | Supersedes Publication MM-IN001A-EN-P - October 2021
Copyright © 2022 Rockwell Automation, Inc. All rights reserved. Printed in the U.S.A.