PowerFlex 7000 Medium Voltage AC Drive Air-Cooled ("B" Frame)—ForGe Control

Bulletin Number 7000

Allen-Bradley
by ROCKWELL AUTOMATION

Installation Instructions

Original Instructions

Important User Information

Read this document and the documents listed in the additional resources section about installation, configuration, and operation of this equipment before you install, configure, operate, or maintain this product. Users are required to familiarize themselves with installation and wiring instructions in addition to requirements of all applicable codes, laws, and standards.

Activities including installation, adjustments, putting into service, use, assembly, disassembly, and maintenance are required to be carried out by suitably trained personnel in accordance with applicable code of practice.

If this equipment is used in a manner not specified by the manufacturer, the protection provided by the equipment may be impaired.

In no event will Rockwell Automation, Inc. be responsible or liable for indirect or consequential damages resulting from the use or application of this equipment.

The examples and diagrams in this manual are included solely for illustrative purposes. Because of the many variables and requirements associated with any particular installation, Rockwell Automation, Inc. cannot assume responsibility or liability for actual use based on the examples and diagrams.

No patent liability is assumed by Rockwell Automation, Inc. with respect to use of information, circuits, equipment, or software described in this manual.

Reproduction of the contents of this manual, in whole or in part, without written permission of Rockwell Automation, Inc., is prohibited.

Throughout this manual, when necessary, we use notes to make you aware of safety considerations.

WARNING: Identifies information about practices or circumstances that can cause an explosion in a hazardous environment, which may lead to personal injury or death, property damage, or economic loss.

ATTENTION: Identifies information about practices or circumstances that can lead to personal injury or death, property damage, or economic loss. Attentions help you identify a hazard, avoid a hazard, and recognize the consequence.

IMPORTANT Identifies information that is critical for successful application and understanding of the product.

Labels may also be on or inside the equipment to provide specific precautions.

SHOCK HAZARD: Labels may be on or inside the equipment, for example, a drive or motor, to alert people that dangerous voltage may be present.

BURN HAZARD: Labels may be on or inside the equipment, for example, a drive or motor, to alert people that surfaces may reach dangerous temperatures.

ARC FLASH HAZARD: Labels may be on or inside the equipment, for example, a motor control center, to alert people to potential Arc Flash. Arc Flash will cause severe injury or death. Wear proper Personal Protective Equipment (PPE). Follow ALL Regulatory requirements for safe work practices and for Personal Protective Equipment (PPE).

Preface

Drive Installation

Chapter 1

Pre-Commissioning

Chapter 2

Summary of Changes

This publication contains the following new or updated information. This list includes substantive updates only and is not intended to reflect all changes.

Topic	Page
Added procedure on wiring the main fan assembly power cables in the converter cabinet	41

About This Publication

This manual provides procedural information for installing the PowerFlex® 7000 Medium Voltage "B" Frame drives (heat sink and heat pipe models). This document also includes information regarding customer-responsibilities in advance of the commissioning process.

Who Should Use This Manual

This manual is intended for use by personnel familiar with medium-voltage and solid-state variable-speed drive equipment. The manual contains material that enables qualified engineering personnel to install the drive system.

What Is Not in the Manual

This manual provides information specific to the installation and configuration of the PowerFlex 7000 "B" frame drive. These topics are covered in other manuals:

- Physical transportation or site requirements of the drive cabinetry.
- Details concerning the operator interface, or configuration of drive parameters.
- Dimensional and electrical drawings generated for each customer order.
- Spare parts list compiled for each customer order.
- Troubleshooting potential usage problems.

See these documents for additional product detail or instruction that is related to PowerFlex 7000 "B" frame drives:

- Drive-specific technical specifications.
- Transportation and Handling Procedures: instructions on how to receive and handle a Medium Voltage variable-frequency drive and related equipment.
- Drive-specific user manual: instructions for daily and recurrent drive usage or maintenance tasks.
- Drive-specific technical data: additional troubleshooting, parameters, and specification information for MV variable-frequency drives.

Rockwell Automation provides the site- and installation-specific electrical and design information for each drive during the order process cycle. If they are not available on-site with the drive, contact Rockwell Automation.

If you have multiple drive types or power ranges, verify that you have the correct documentation for each specific PowerFlex 7000 product:

- "A" Frame for lower power air-cooled configurations (up to approximately 1250 hp / 933 kW).
- "B" Frame for higher-power, air-cooled configurations (heat sink or heat pipe models).
- "C" Frame for all liquid-cooled configurations.

General Precautions

ATTENTION: This drive contains ESD (electrostatic discharge) sensitive parts and assemblies. Static control precautions are required during install, test, service, or repair procedures for this assembly. Component damage can result if ESD control procedures are not followed. If you are not familiar with static control procedures, refer to Allen-Bradley publication 8000-4.5.2, "Guarding Against Electrostatic Damage" or any other applicable ESD protection handbook.

ATTENTION: An incorrectly applied or installed drive can result in component damage or a reduction in product life. Wiring or application errors, such as, an undersized motor, incorrect or inadequate AC supply, or excessive ambient temperatures can result in malfunction of the system.

ATTENTION: Only personnel familiar with the PowerFlex 7000 adjustable speed drive (ASD) and associated machinery can plan or implement the installation, start-up and subsequent maintenance of the system. Failure to comply can result in personal injury and/or equipment damage.

Download Firmware, AOP, EDS, and Other Files

Download firmware, associated files (such as AOP, EDS, and DTM), and access product release notes from the Product Compatibility and Download Center at rok.auto/pcdc.

Additional Resources

These documents contain additional information concerning related products from Rockwell Automation.

Resource	Description
PowerFlex 7000 Medium Voltage AC Drive Parameter Manual, publication 7000-TD002 for the latest firmware revision	Provides details and programming during commissioning or troubleshooting.
Industrial Automation Wiring and Grounding Guidelines, publication 1770-4.1	Provides general guidelines for installing a Rockwell Automation industrial system.
PowerFlex 7000 Medium Voltage AC Drives Technical Data, publication 7000-TD010	Provides all technical data and specifications for PowerFlex 7000 drives.
PowerFlex 7000 Medium Voltage AC Drive Air-Cooled ("B" Frame)—ForGe Control User Manual, publication 7000-UM202	Provides general information regarding the usage and programming of the operator interface after installation (before or after commissioning).
PowerFlex 7000 Medium Voltage AC Drive Transportation & Handling Procedures Installation Instructions, publication 7000-IN008	Provides receiving and handling instructions for medium voltage variable-frequency drive and related equipment.
PowerFlex 7000 HMI Offering With Enhanced Functionality User Manual, publication 7000-UM201	Provides information for human machine interface (HMI) with enhanced functionality.
PowerFlex 7000 Medium Voltage AC Drive Air-Cooled ("B" Frame)—ForGe Control (Using PanelView 550) User Manual, publication 7000-UM151	Provides information for drives equipped with the PanelView™ 550 HMI.
Electrical Schematics and Diagrams	Shipped with the drive and list any additional manual necessary for configuring the drive lineup. The schematic that is titled "General Notes" identifies all required Rockwell Automation publications by publication number.
PowerFlex 7000 Series Safe Torque Off User Manual, publication 7000-UM203	Provides information that is related to the functional safety option of safe torque off.
EtherNet/IP Network Devices User Manual, ENET-UM006	Describes how to configure and use EtherNet/IP™ devices to communicate on the EtherNet/IP network.
Ethernet Reference Manual, ENET-RM002	Describes basic Ethernet concepts, infrastructure components, and infrastructure features.
System Security Design Guidelines Reference Manual, SECURE-RM001	Provides guidance on how to conduct security assessments, implement Rockwell Automation products in a secure system, harden the control system, manage user access, and dispose of equipment.
Industrial Components Preventive Maintenance, Enclosures, and Contact Ratings Specifications, publication IC-TD002	Provides a quick reference tool for Allen-Bradley industrial automation controls and assemblies.
Safety Guidelines for the Application, Installation, and Maintenance of Solid-state Control, publication SGI-1.1	Designed to harmonize with NEMA Standards Publication No. ICS 1.1-1987 and provides general guidelines for the application, installation, and maintenance of solid-state control in the form of individual devices or packaged assemblies incorporating solid-state components.
Industrial Automation Wiring and Grounding Guidelines, publication 1770-4.1	Provides general guidelines for installing a Rockwell Automation industrial system.
Product Certifications website, rok.auto/certifications	Provides declarations of conformity, certificates, and other certification details.

You can view or download publications at rok.auto/literature.

Notes:

Drive Installation

This section details the processes for cabinet connection and component installation such as fan hoods, cables, the grounding, and the interlocking of units.

See the PowerFlex® 7000 Medium Voltage AC Drive Transportation & Handling Procedures, publication 7000-IN008, for drive cabinetry site and level requirements before continuing with the remaining installation tasks.

Where appropriate, separate diagrams and instructions are available for both the heat sink and the heat pipe "B" Frame models. Assume any "B" Frame diagram that is not identified as a heat pipe model represents a heat sink model.

Safety and Codes

ATTENTION: The CEC, NEC, or local codes outline provisions for safely installing electrical equipment. Installation must comply with wire type specifications, conductor sizes, branch circuit protection, and disconnect devices. Failure to do so can result in personal injury and/or equipment damage.

Arc Resistant Warning Labels

These warning labels are affixed to areas of the PowerFlex 7000 drive where, if proper precautions are not followed, equipment is NOT arc resistant. You must follow all precautions for equipment to remain arc resistant.

DANGER

Arc flash hazard
Risk of severe injury or death
Equipment NOT arc resistant rated while filter covers open.

DANGER

Arc flash hazard
Risk of severe injury or death
Equipment NOT arc resistant rated while filter covers open.

DANGER

Hazard d'arc électrique
Risque de blessures graves ou la mort
Appareillage n'est PAS résistante aux arcs lorsque les capots filtre sont ouverte.

NOTICE

ARC RESISTANT EQUIPMENT
Accessibility: IEEE C37.20.7 Type 2B
IEC 62271-200 IAC AFLR
Arcing Short Circuit Current : <= 50kA
Arc Duration: Device Limited
Protective Devices: Mersen
A480R2R-1 to A480R12R-1
A051B1DAR0-19R
A051B2DAR0-18R and A051B2DAR0-24R
Protect only with fuses specified.
Arc resistant functionality requires that:
Medium voltage doors must be bolted and locked.
Covers must be fully secured.

AVIS

APPAREILLAGE RESISTANTE AUX ARC
Accessibilité: IEEE C37.20.7 Type 2B
IEC 62271-200 IAC AFLR
Courant d'arc court-circuit : <= 50kA
Arc duration: limité par le dispositif
Fusibles acceptable: Mersen
A480R2R-1 à A480R12R-1
A051B1DAR0-19R
A051B2DAR0-18R et A051B2DAR0-24R
Protéger uniquement par des fusibles indiqués.
Fonctionnalité résistante aux arcs exige que:
Portes de moyenne tension doivent être boulonné et verrouillé.
Capots doivent être pleinement sécurisé.

Transporting and Siting the Drive

Follow all guidelines for siting the components before continuing with these installation procedures.

The process can vary depending on the type and number of drive components in your specific installation. Follow the procedures that are recommended for your particular components. Contact your Rockwell Automation® sales or service representative with any questions during the installation process.

Cabinet Layout and Dimension Drawings of Drive

Generic dimension drawings for the "B" Frame drives are available in the PowerFlex 7000 Reference Manual. Drawings specific to your unit and your installation are available as a package with your unit. For additional copies, or if you have questions, contact your Rockwell Automation sales representative.

Control/Cabling Cabinet

Figure 1 ... Figure 15 illustrate the medium voltage area in the control/cabling cabinet behind the low voltage compartment. The barriers are removed.

IMPORTANT Heat pipes are only available within AFE rectifier "B" Frame models.

Figure 1 - Cabling Cabinet for AFE Rectifier (Heat Sink Model)

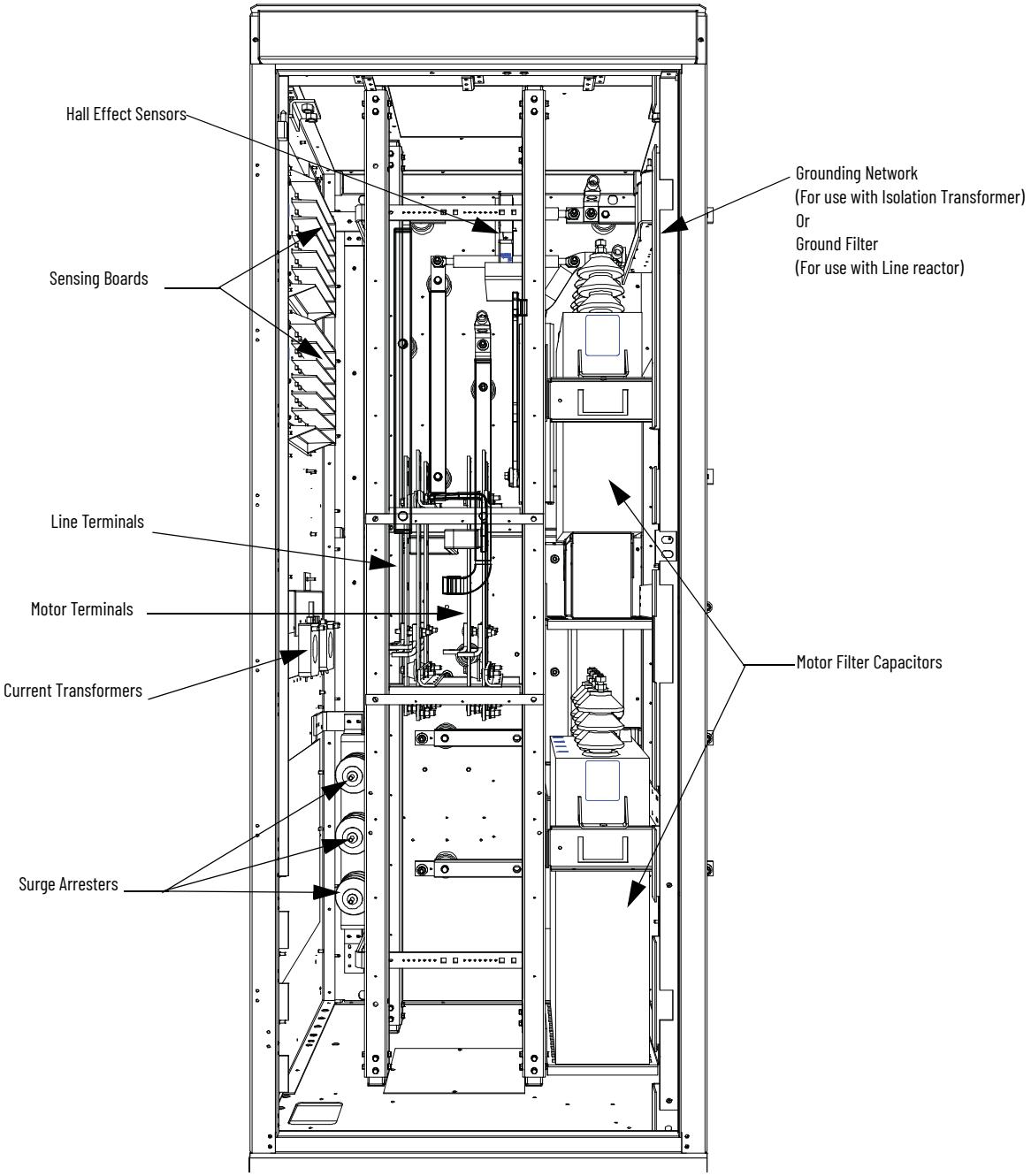

Figure 2 - Cabling Cabinet for AFE Rectifier (Heat Pipe Model)

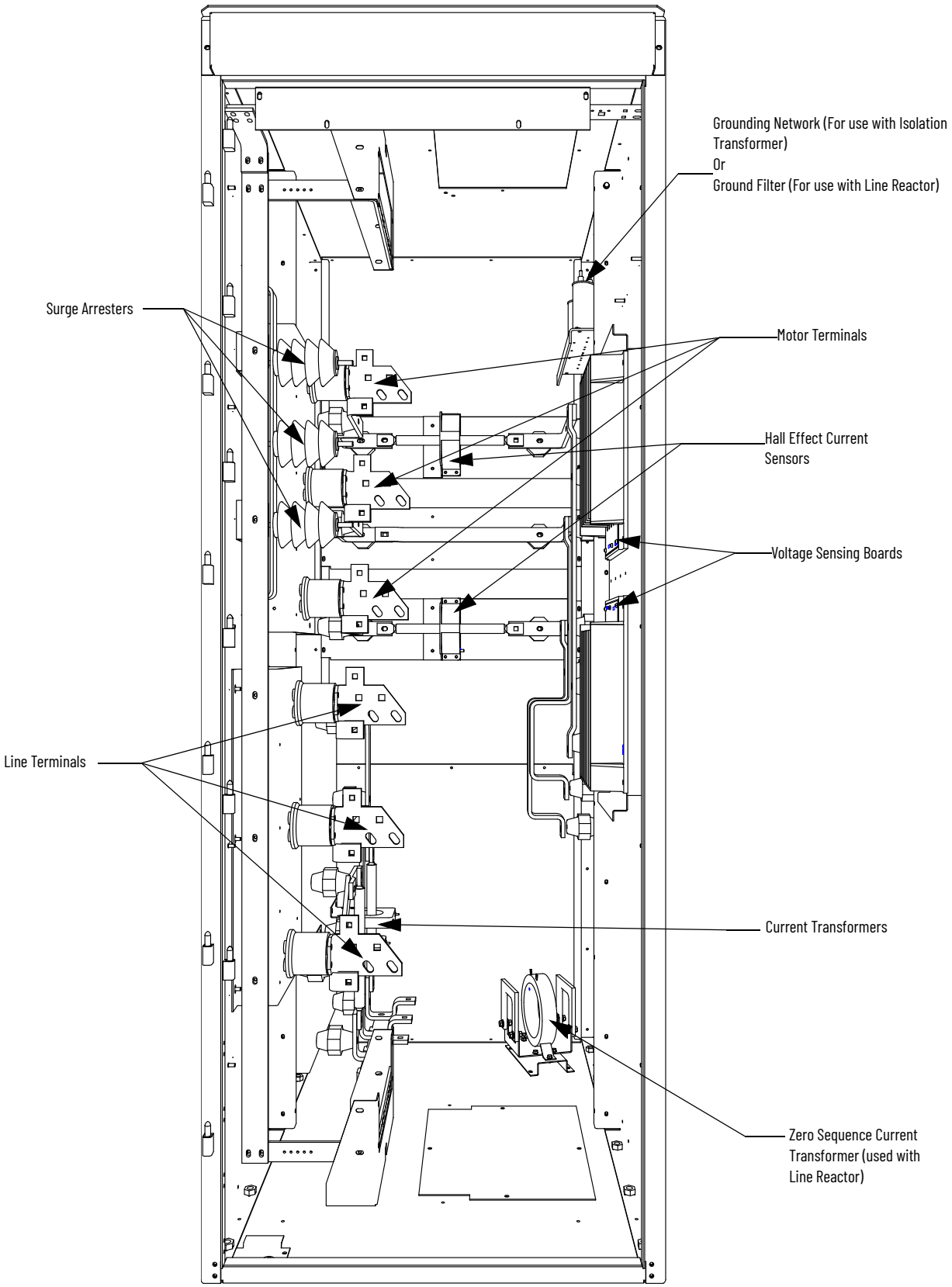

Figure 3 - Cabling Cabinet for AFE Rectifier (6600V Heat Pipe RPDTD)

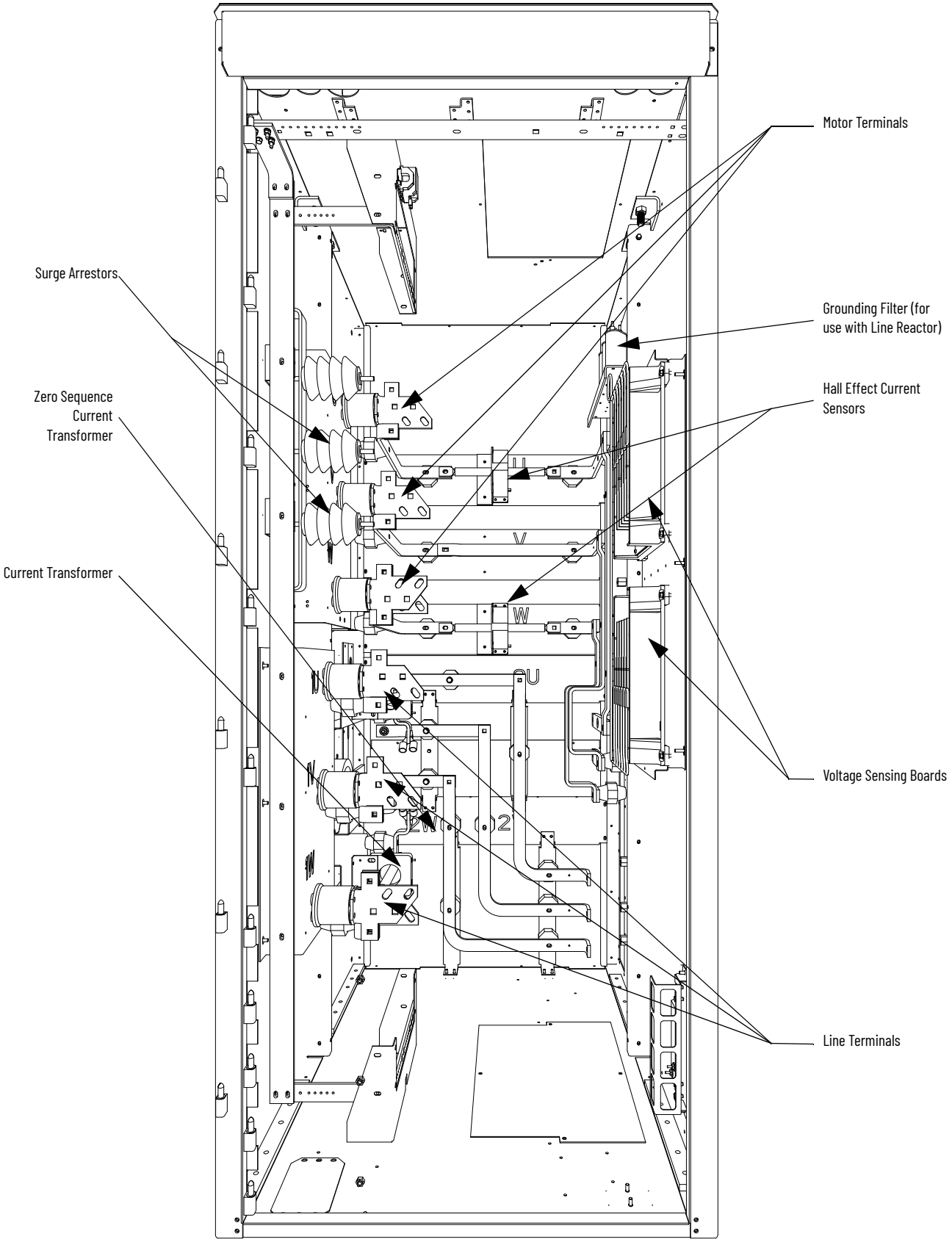

Figure 4 - Cabling Cabinet for 18-pulse Rectifier (Motor Filter Capacitors Not Shown)

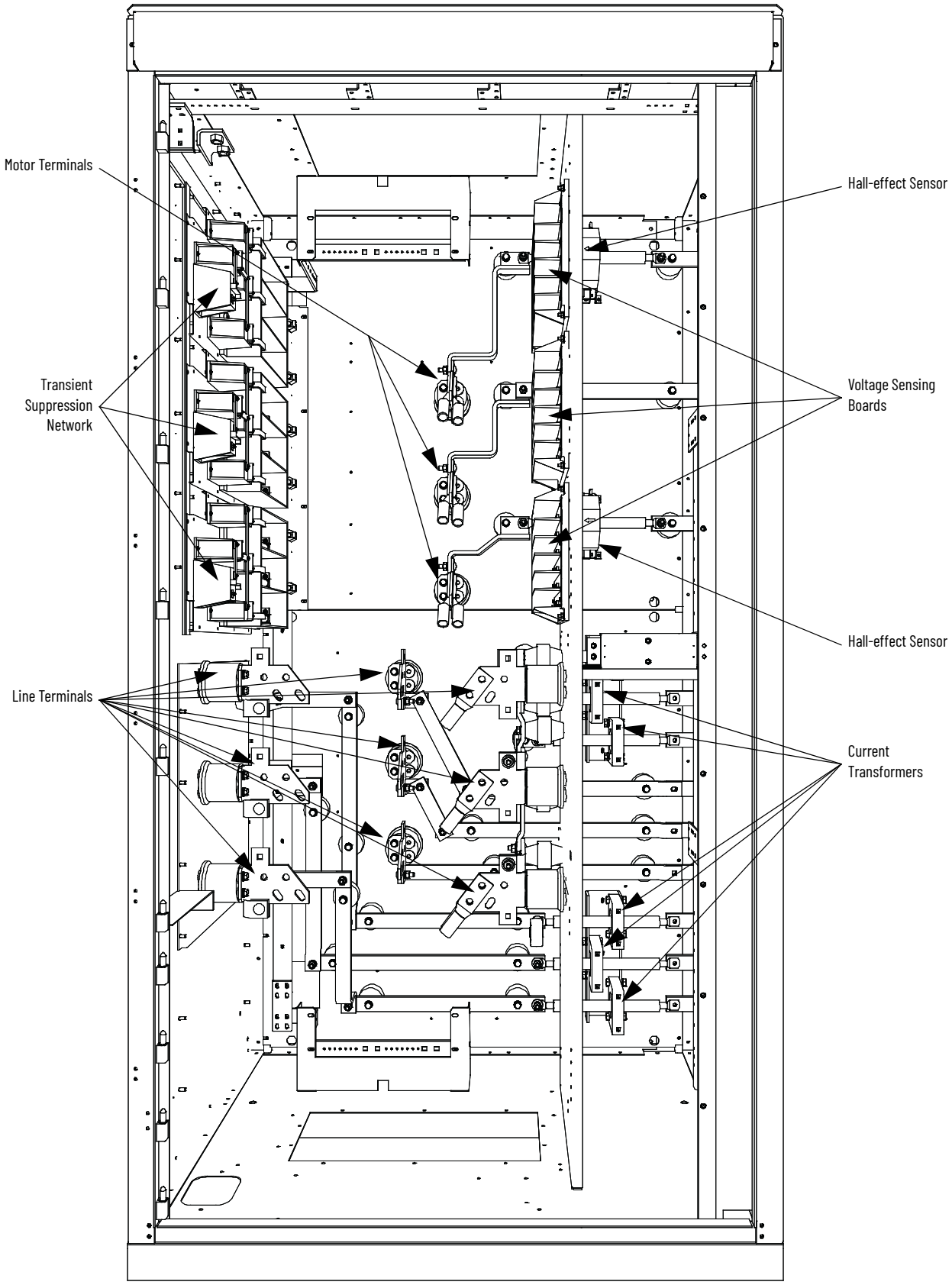

Figure 5 - AC Line Reactor for AFE Rectifier with Connection Cabinet (Heat Sink Model)

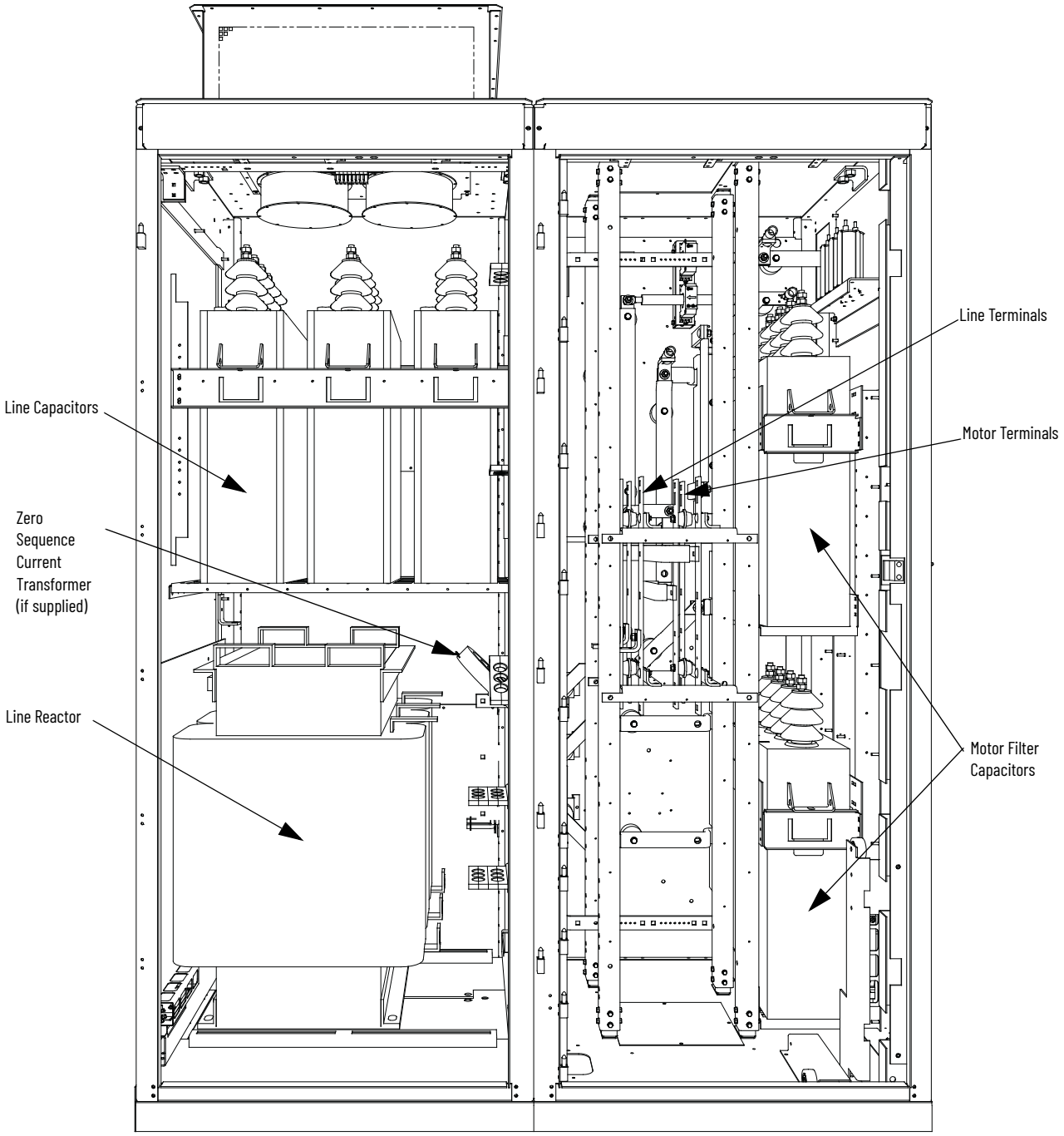

Figure 6 - AC Line Reactor Cabinet (6600V Heat Pipe RPDTD Model)

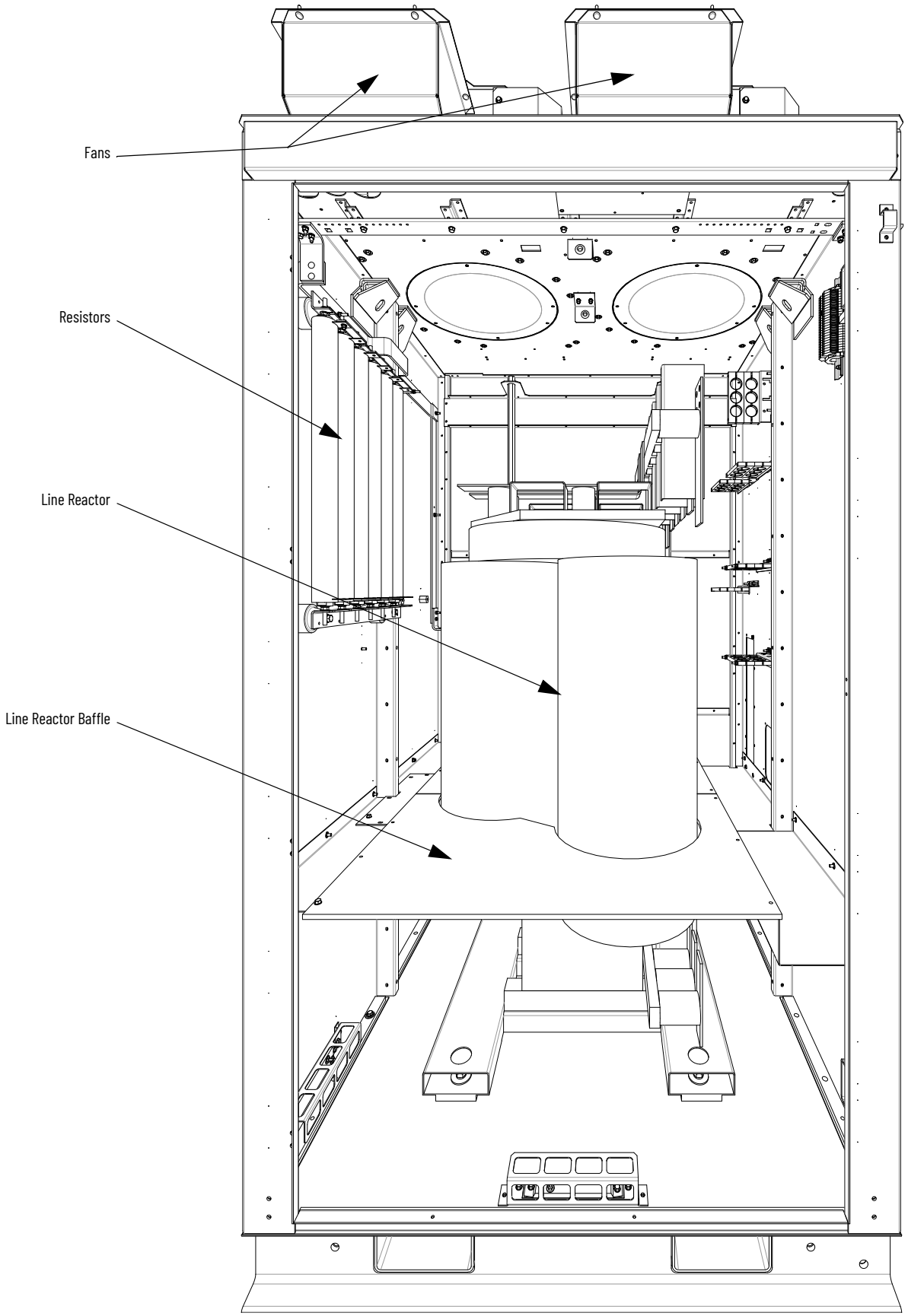

Figure 7 - AC Line Reactor with Connection Cabinet (Heat Pipe Model)

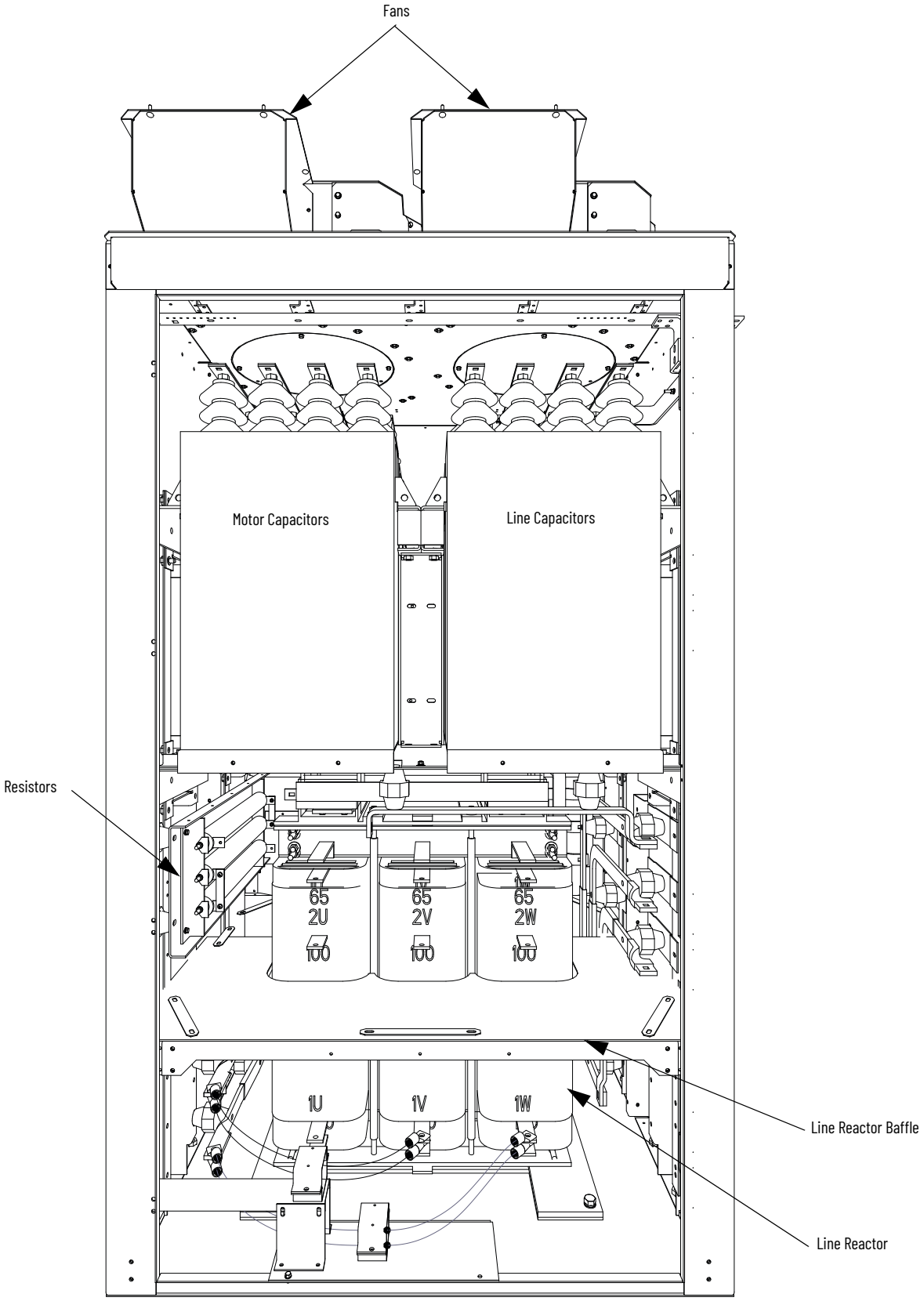

Figure 8 - Converter Cabinet (Heat Sink Model, 2400V Version Shown)

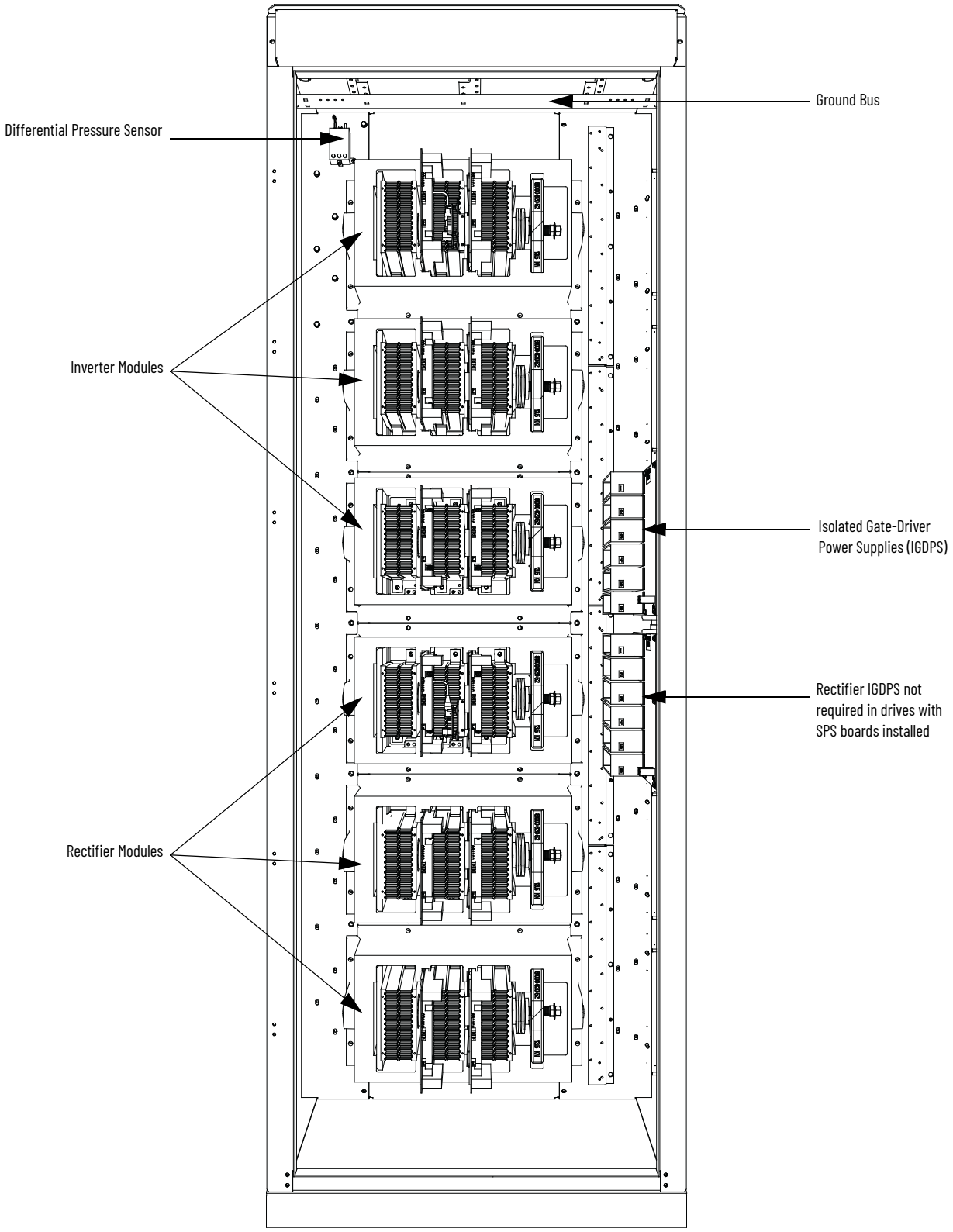

IMPORTANT There can be minor variations in the cabinet layout for different voltage classes. This installation manual does not show SPS boards that are installed.

Figure 9 - Converter Cabinet (Heat Sink Model, 3300...4160V Version Shown)

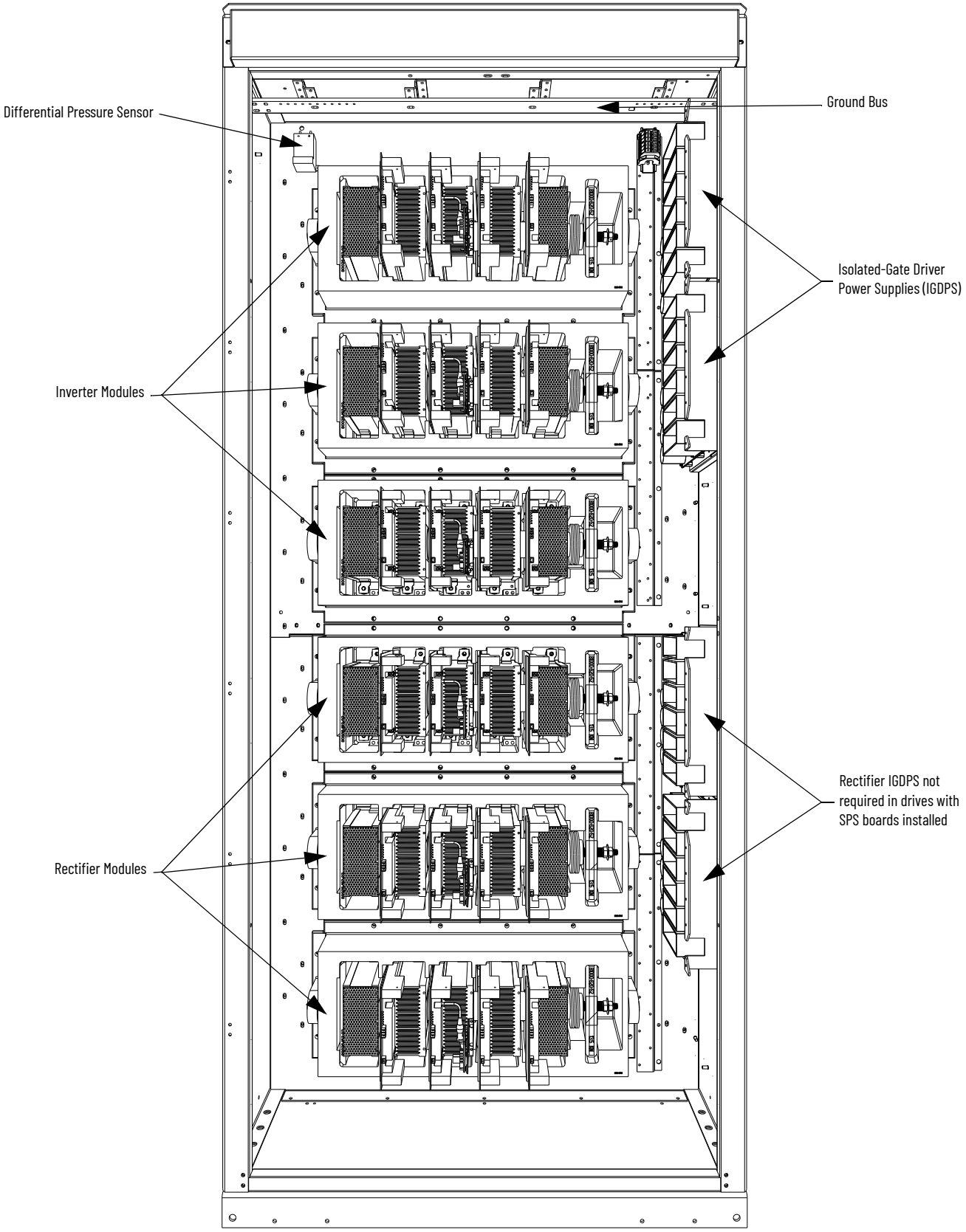

Figure 10 - Converter Cabinet (Heat Sink Model, 6600V Version Shown)

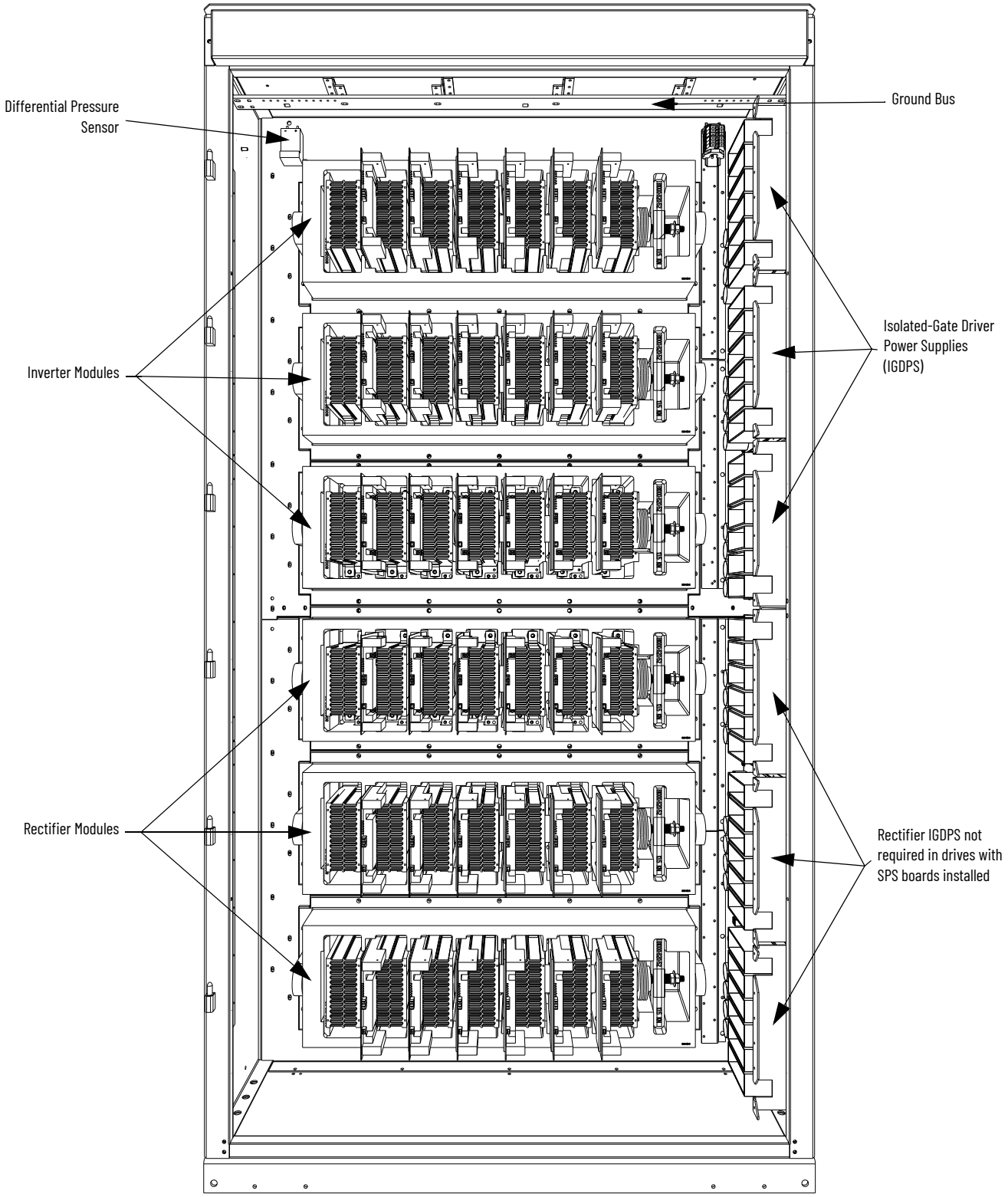

Figure 11 - Converter Cabinet, 3300...4160V (Heat Pipe Model)

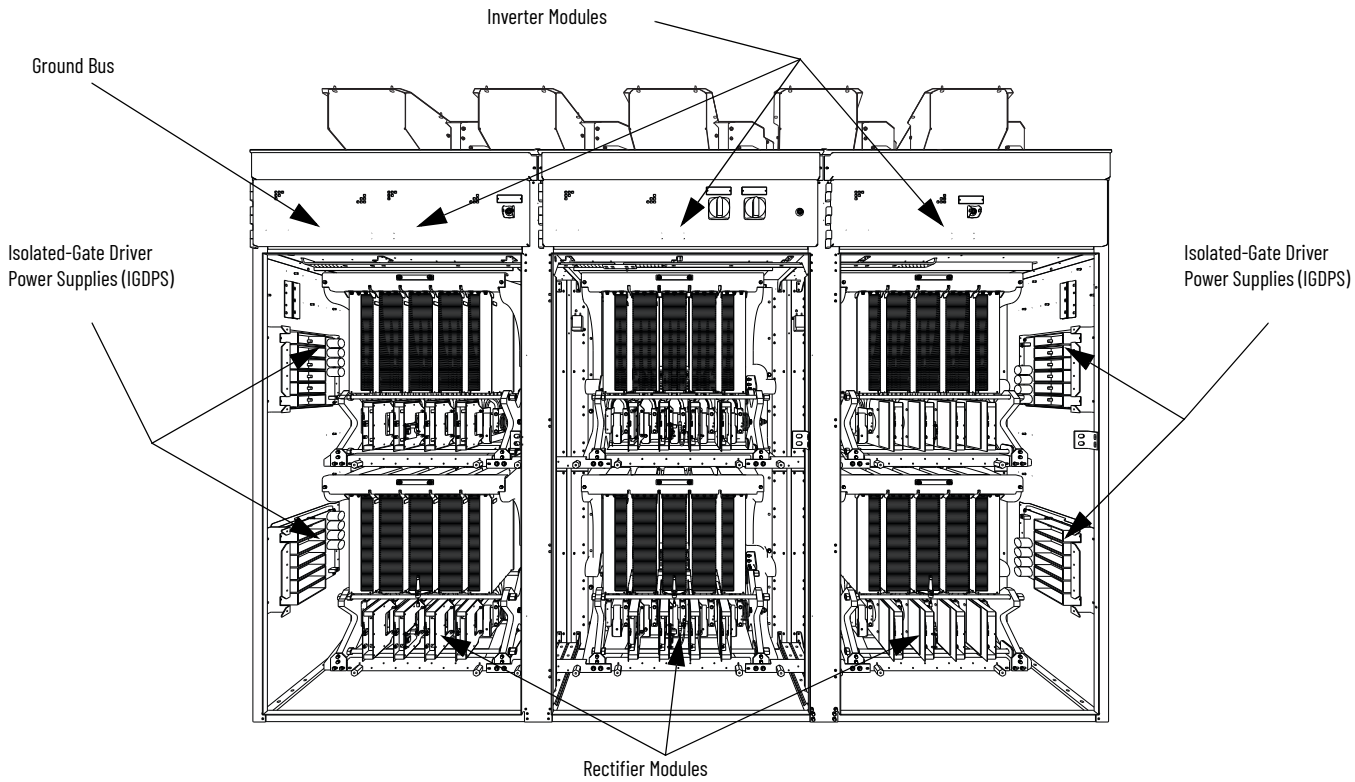

Figure 12 - Converter Cabinet, 6600V (Heat Pipe Model)

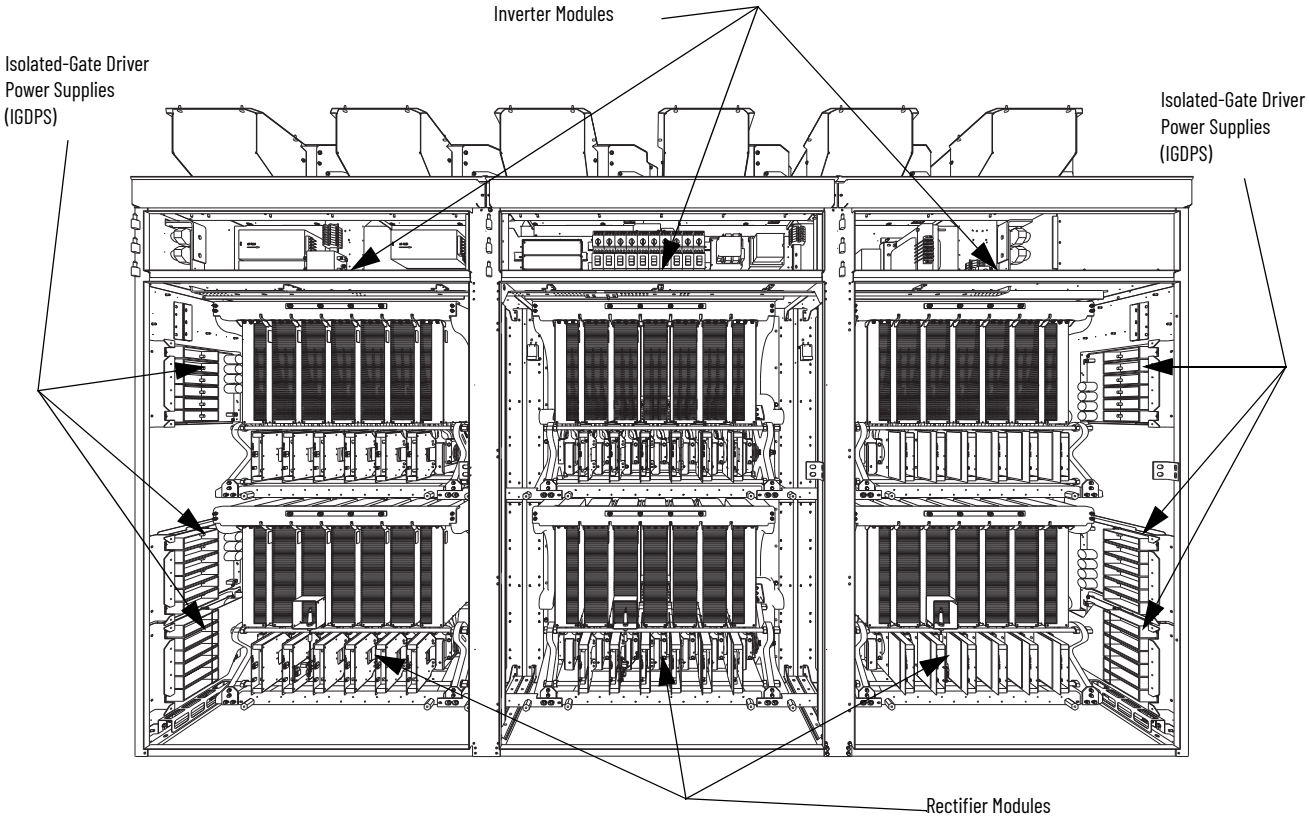

Figure 13 - DC Link/Fan Cabinet with Fan Control Panel (Heat Sink Model)

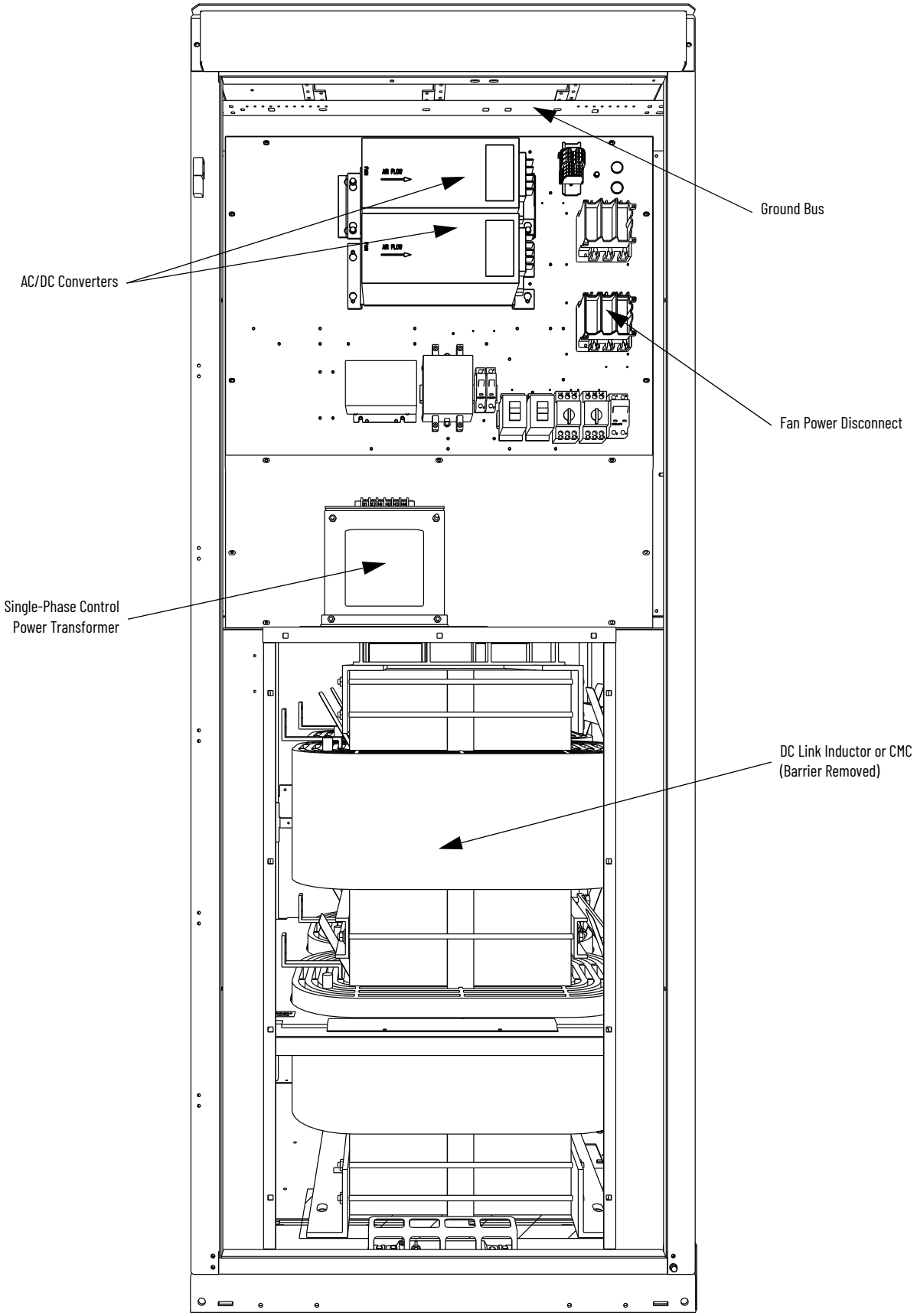

Figure 14 - DC Link/Fan Cabinet CMC (Heat Pipe Model)

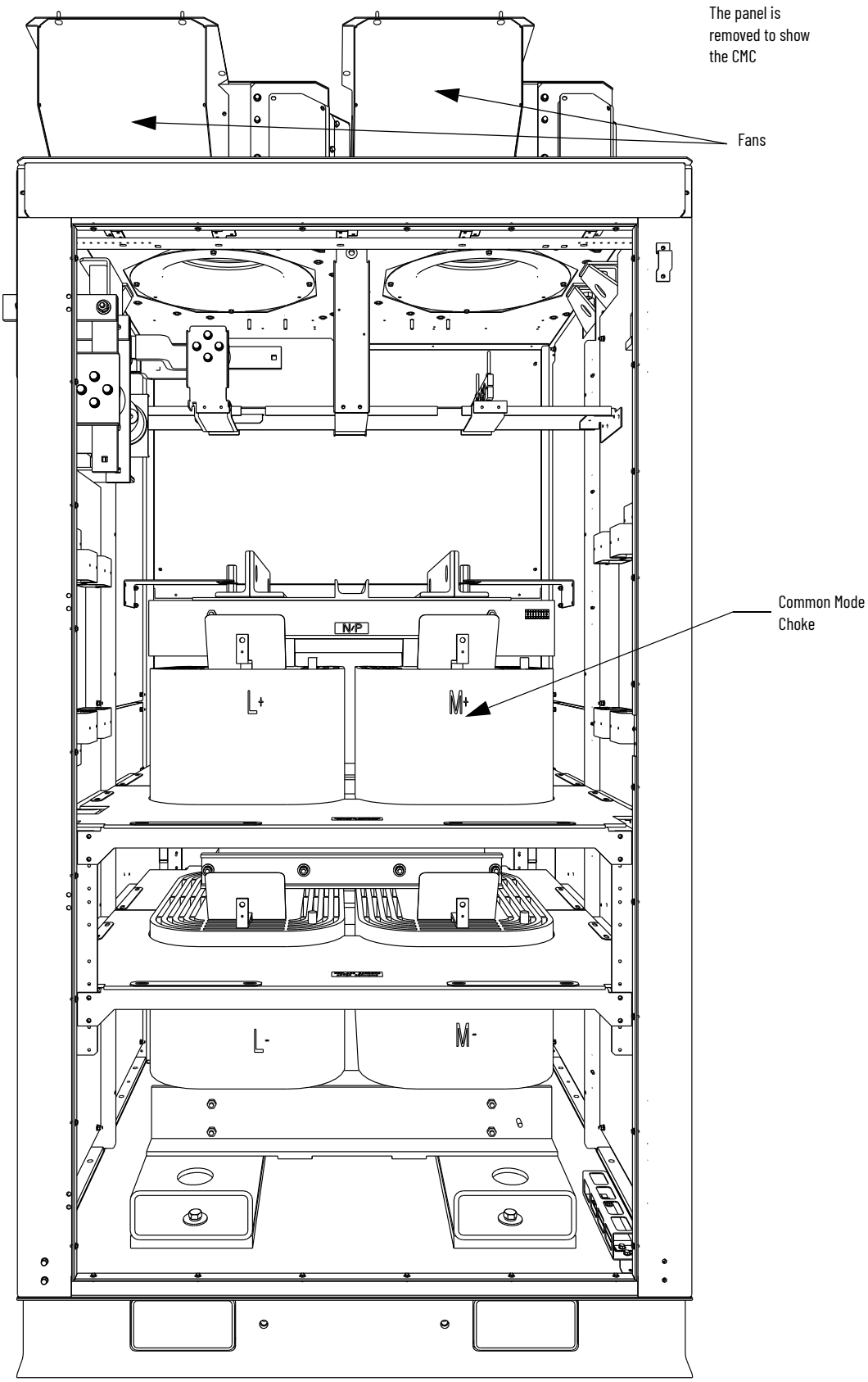

Figure 15 - DC Link/Fan Cabinet

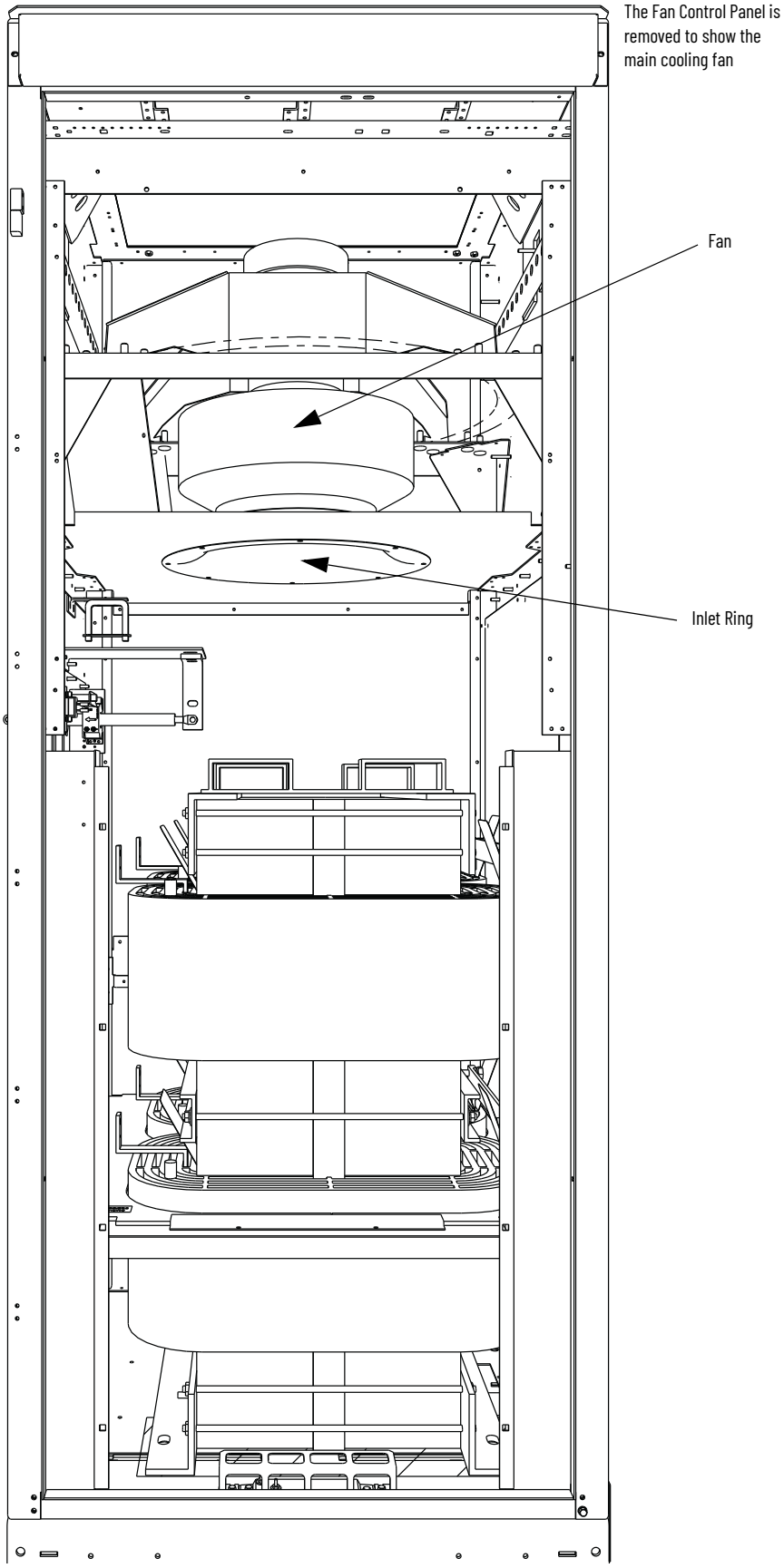

IEC Component and Device Designations

PowerFlex 7000 drive electrical drawings use IEC-based conventions, while remaining compatible with ANSI (American National Standards Institute) standards. Component identification symbols on the drawings are international. PowerFlex 7000 drive elementary drawings (ED) set provides a full listing of these symbols. Each ED set also lists the device designations that are used on the drawings and labels with explanations.

The wiring identification uses a source/destination wire number convention on wiring that is point-to-point multi-conductor and elsewhere as warranted. The wire-numbering system of unique, single numbers for multi-drop and point-to-point wiring is common in general control and power wiring. When wiring connects between the sheets, or ends and continues on another a drawing, an arrow and reference is used in the drawing to indicate the ongoing connection.

The drawing reference indicates the sheet and the X/Y coordinates of the continuation point. Each drawing set contains a sheet with an explanation of the reference system. The wire-numbering system serves as confirmation that you are tracing the correct wire from sheet to sheet or across a drawing. Wires in multi-conductor cables are typically identified with color rather than by number. The abbreviations that are used to identify the colors on the drawings are fully identified on a sheet in the drawing set.

Selection of Power Wiring

These tables show general wire selections common to the PowerFlex 7000 drive installations.

IMPORTANT	Adherence to the recommended field-power cable insulation levels for medium voltage drives provides easier start-up and operation. Increase the cable insulation level over the default that is supplied for an across-the-line application with the same rated line-to-line voltage.

IMPORTANT	Use either shielded or unshielded cable, according to the requirements of the distribution system designer and local standards. However, NEC requires shielded cable for installations above 2 kV.

Cable Insulation

Table 1 and Table 2 provide cable insulation requirements for the PowerFlex 7000 "B" Frame drive.

ATTENTION: Voltage ratings in Table 1 and Table 2 are peak line-to-ground. Some cable-manufacturers rate voltage line-to-line RMS. Verify that the cable meets the rating that is specified in Table 1 and Table 2.

Table 1 - Cable Insulation Requirements for AFE and 18-pulse Drives with Isolation Transformer

System Voltage (V, RMS)	Cable Insulation Rating (kV) (maximum peak line-to-ground)	
	Line Side	Machine Side
2400	≥4.1	≥2.2
3000	≥5.12	≥2.75
3300	≥5.63	≥3.0
4160	≥7.1	≥3.8
6000	≥10.8	≥5.5
6300	≥11.4	≥5.8
6600	≥11.8	≥6.0

Table 2 - Cable Insulation Requirements for "Direct-to-Drive™" Technology

System Voltage (V, RMS)	Cable Insulation Rating (kV) (maximum peak line-to-ground)	
	Line Side	Machine Side
2400	≥2.2	≥2.2
3000	≥2.75	≥2.75
3300	≥3.0	≥3.0
4160	≥3.8	≥3.8
6000	≥5.5	≥5.5
6300	≥5.8	≥5.8
6600	≥6.0	≥6.0

See PowerFlex 7000 Medium Voltage AC Drives Technical Data, publication 7000-TD010, for general wire categories.

Installation

After the drive is placed at the installation site:

1. Remove the lag bolts that fasten the drive to the shipping skid.
2. Move the drive off the shipping skid and discard the skid.
3. Position the drive in its desired location.
4. Verify that the drive is on a level surface and that the position of the drive is vertical when you install the anchor bolts. The drive dimension-drawing shows the location of the provided anchor points.
5. Install and tighten the anchor bolts (M12 or 1/2in. hardware is required).

IMPORTANT Engineered bolt systems are mandatory for seismic requirements. Consult Rockwell Automation for further information, if necessary.

6. Remove the top lifting angles and retain the hardware.

7. Install the hardware from the lifting angles in the tapped holes at the top of drive. This blocks leakage of cool air and keeps dust out of the equipment.

Shock Indication Labels

Shock indication labels are devices that permanently record the physical shock occurring to the equipment.

During final preparation for shipment, the factory applies a shock indication label that records shock levels in excess of 10G on the door of the converter cabinet.

During the shipping and installation process drives can inadvertently experience excess shock and vibration that can impair its functionality. When you have situated the drive in its installation area, inspect the shock indication labels on the converter door.

If sufficient shock levels occur, the chevron shaped window appears black in one of the two windows. Record the shock values. There is a greater possibility of the drive having sustained internal damage as the result of physical shock during the shipping and installation process.

Even if the shock indicators are clear, do a full equipment inspection and verification. See Pre-Commissioning on page 65 for details on the inspection and verification process.

Figure 16 - Shock Indicator

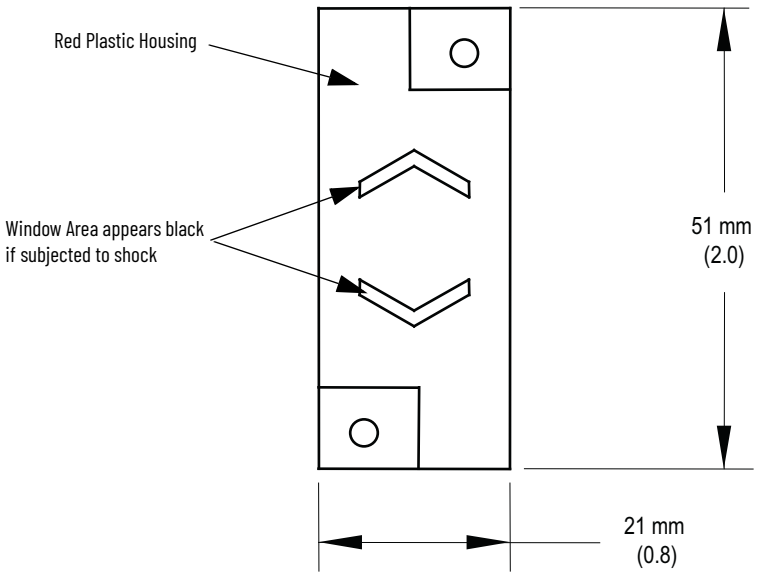

Joining the Shipping Splits (3300...4160V and 6600V Heat Pipe)

IMPORTANT See publication 7000-IN008 for details regarding moving and siting the drive before continuing with these installation procedures.

The 3300...4160 and 6600V heat pipe drives are the "B" Frame models that ship in multiple sections (two for 3300...4160V and three for 6600V). All other "B" Frame models ship as one unit. For the 3300...4160V heat pipe model, the choke section ships separately from main section of the drive (Figure 17). For the 6600V heat pipe model, the choke cabinet and the line reactor section are shipped separately from the main section of the drive (Figure 18).

ATTENTION: Install the drive on a level surface (+/- 1 mm (0.039 in.) over the length of the drive). Use metal shims if necessary to level the cabinets before joining them. Do not attempt to level after joining as it twists the cabinets.

1. Arrange the sections as directed in the dimension drawings and move the sections together. Join the side sheets of the enclosure with thread-forming screws. Use the available holes.
2. Complete the ground bus, power, and control connections as directed in the electrical schematics and this installation guide.
3. Attach choke section to main section of the drive. See Figure 17 and Figure 18.

Figure 17 - Main and Choke Sections of 3300...4160V Heat Pipe Drive Cabinetry

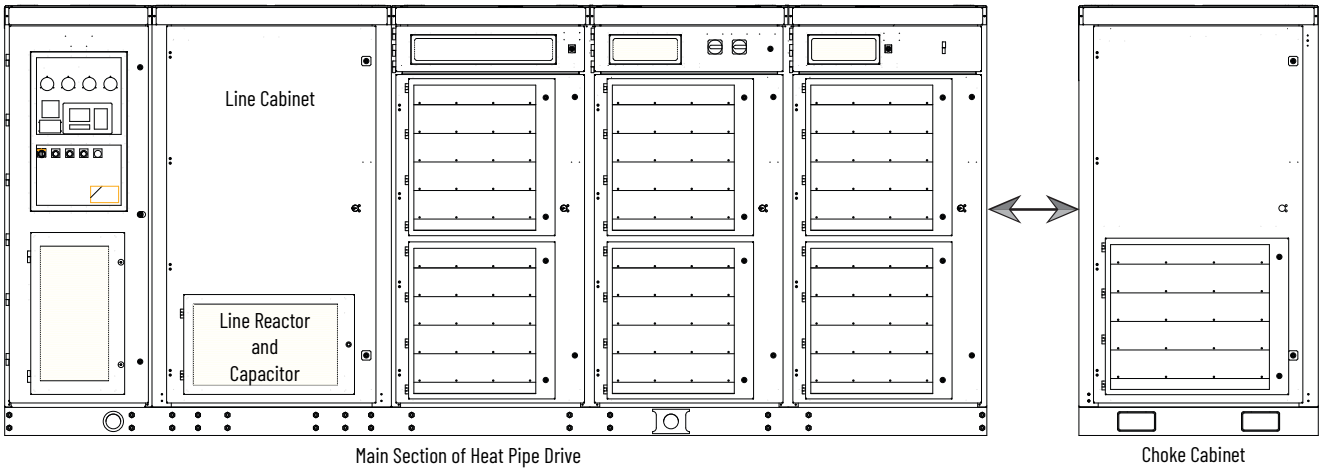

Figure 18 - Main and Choke Sections of 6600V Heat Pipe Drive Cabinetry

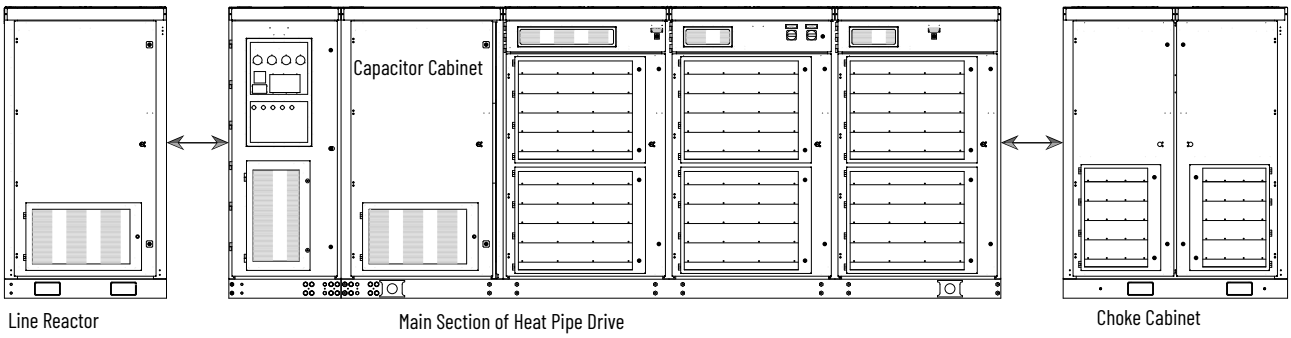

4. Remove the lift supports in the choke cabinet that is used for shipping and retain for future use. See Figure 19.

Figure 19 - Heat Pipe Choke Cabinet (No Fans)

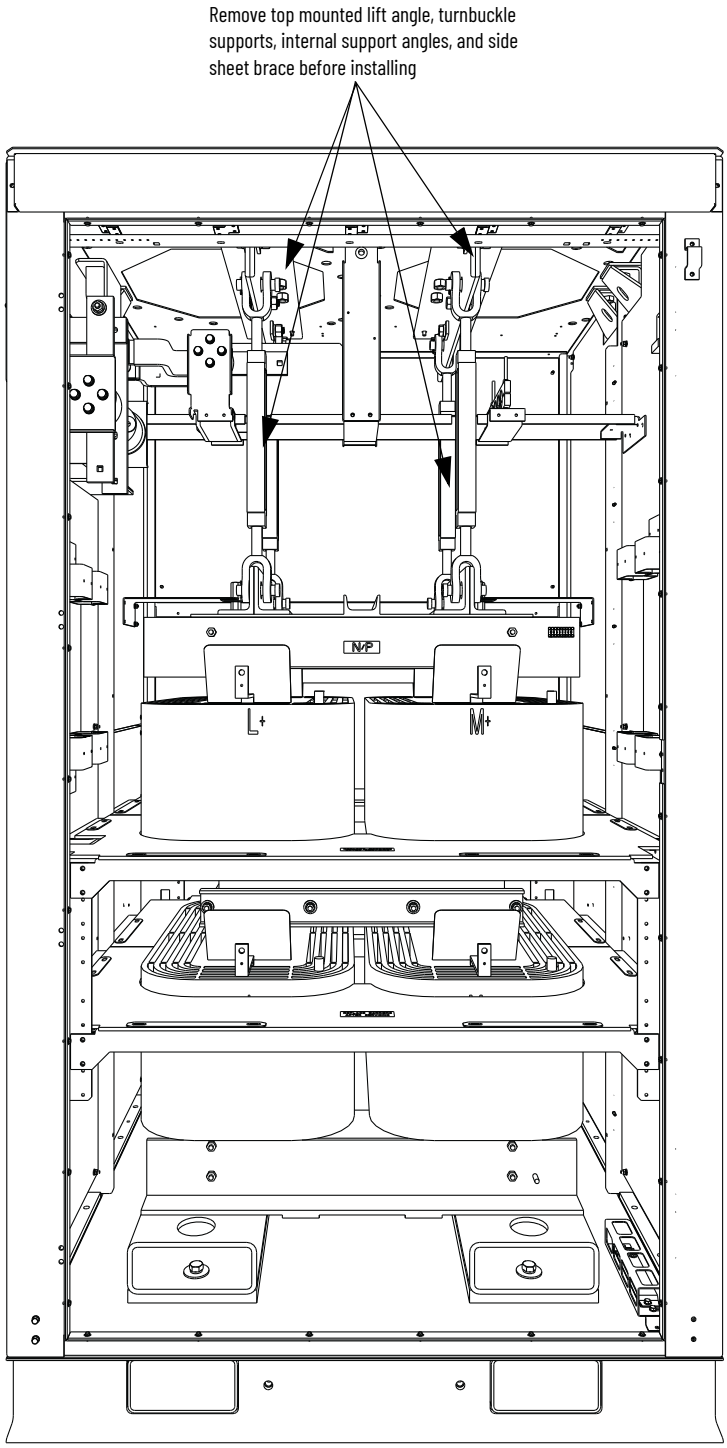

5. Join the choke cabinet side-sheet to the main drive cabinet side-sheet. Use the M10 hardware, see Torque Requirements on page 95 for torque specifications.

Figure 20 - Aligning and Joining Heat Pipe Main and Choke Cabinets (for 3300...4160V and 6600V)

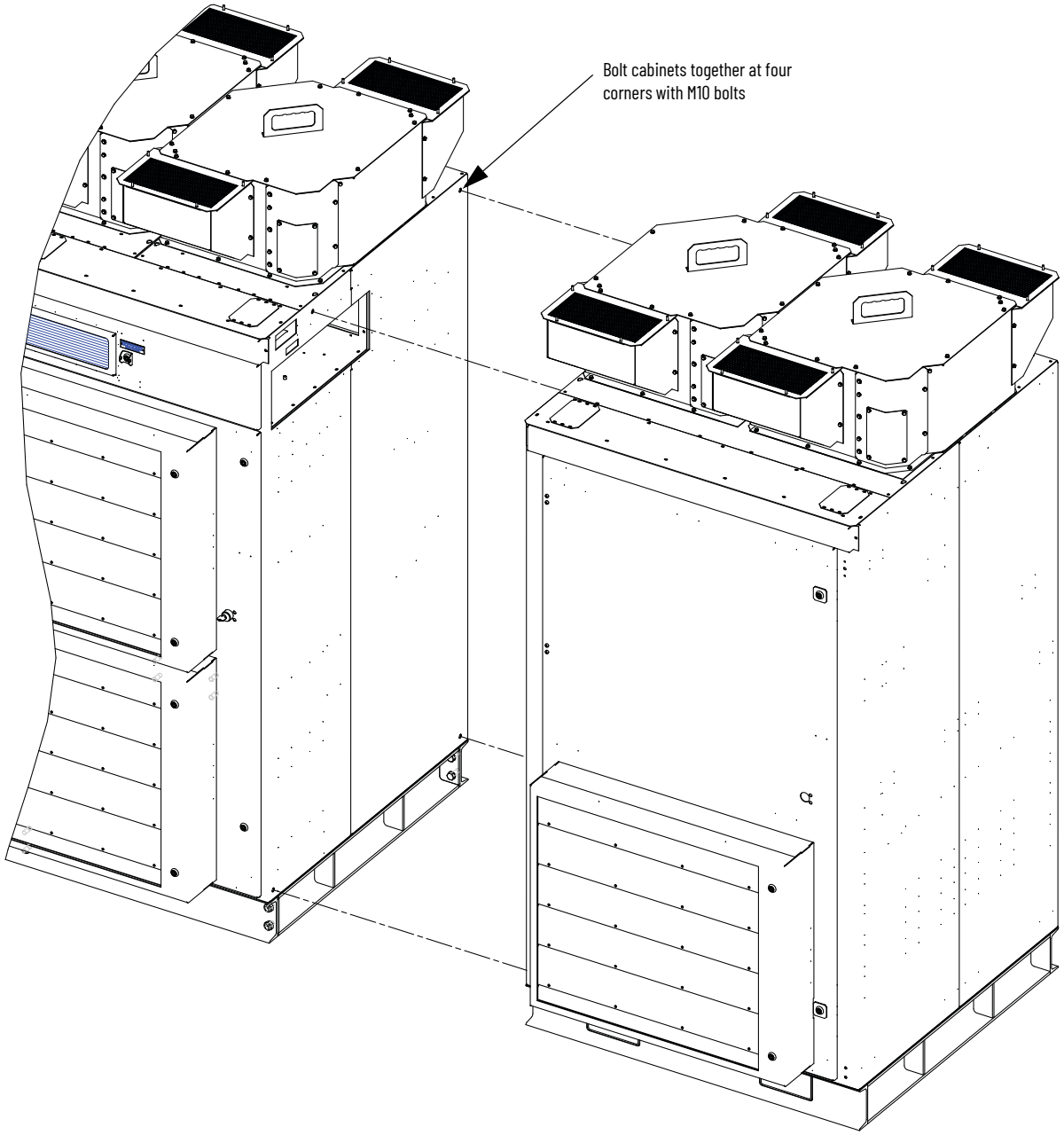

Figure 21 - Aligning and Joining Heat Pipe Main and Line Reactor (for 6600V only)

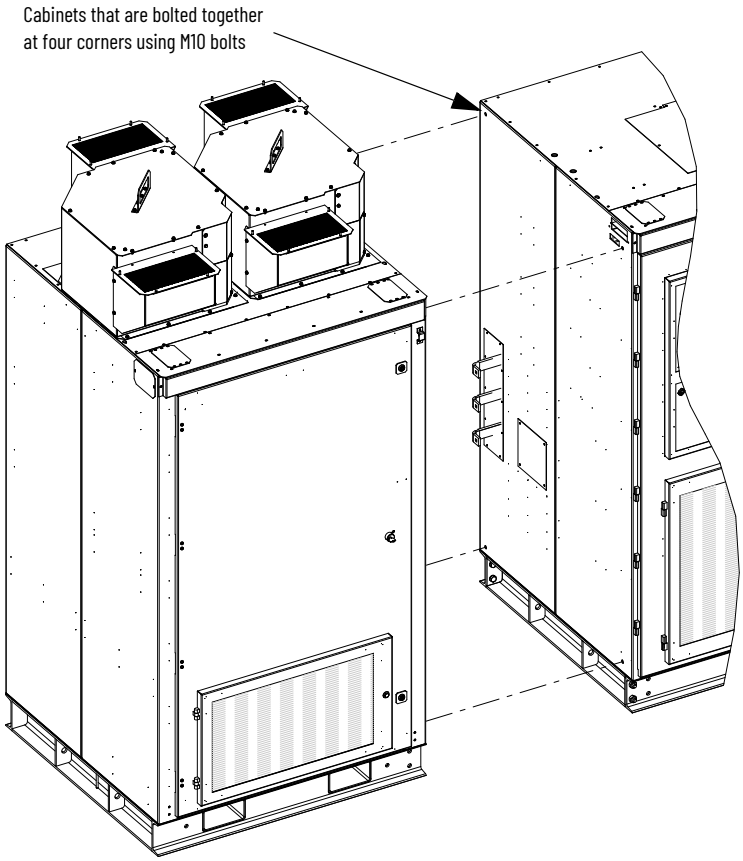

IMPORTANT There is no required order of operations for installing the fans and hoods, and joining the cabinets. Joining the cabinets first allows roof-top access to the upper bolts, but the bolts are also accessible from the front when the fans are installed first.

6. Install top mounted fans.

Figure 22 - 3300...4160V Heat Pipe Drive with Fans Attached

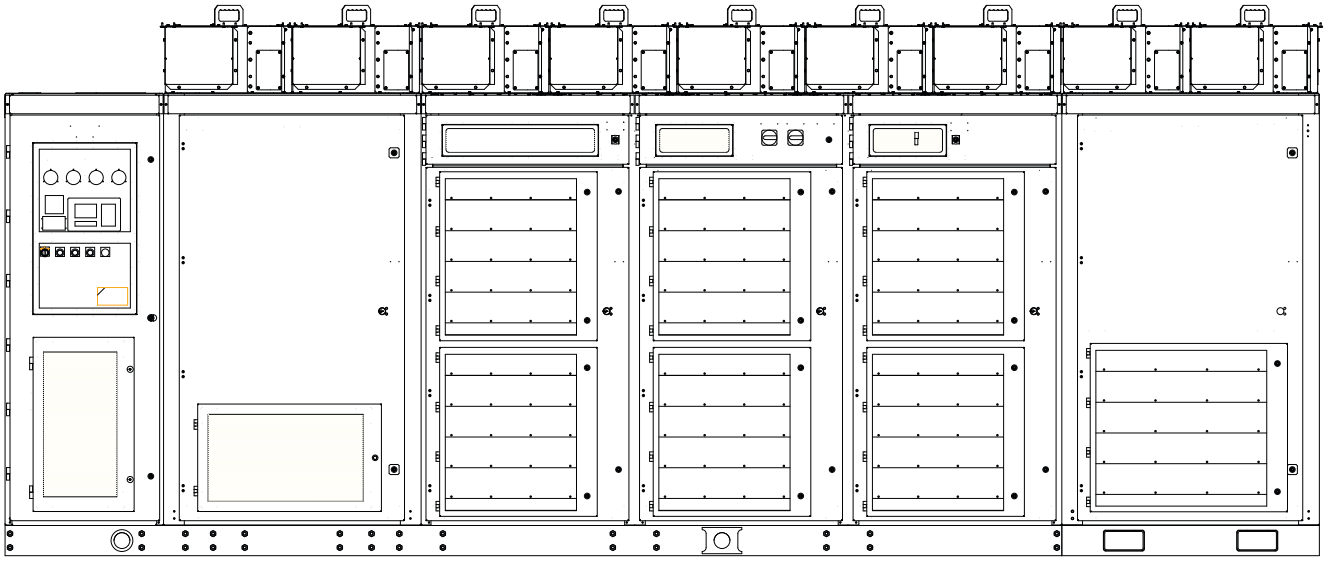

7. Connect the cables from the choke to M+, M-, L-, L+ bus connections at the top left corner of the choke cabinet.

Installing Exhaust Fans and Air Hoods

Install an exhaust hood on the top of the cabinet with the cooling fan. The exhaust hood components ship with the drive, packed in the control/cabling cabinet. For drives with an acoustic hood, the components are shipped assembled, as shown in Figure 24).

1. Remove the protective plate that covers the fan opening on the drive. It is a flat cover plate that is bolted to the top plate. Remove the bolts and plate and retain for reuse.

Assembling Exhaust Fans

The cabinet-top fan assembly is similar to the model shown in Figure 23.

Figure 23 - Fan Assembly (Heat Pipe Model Shown)

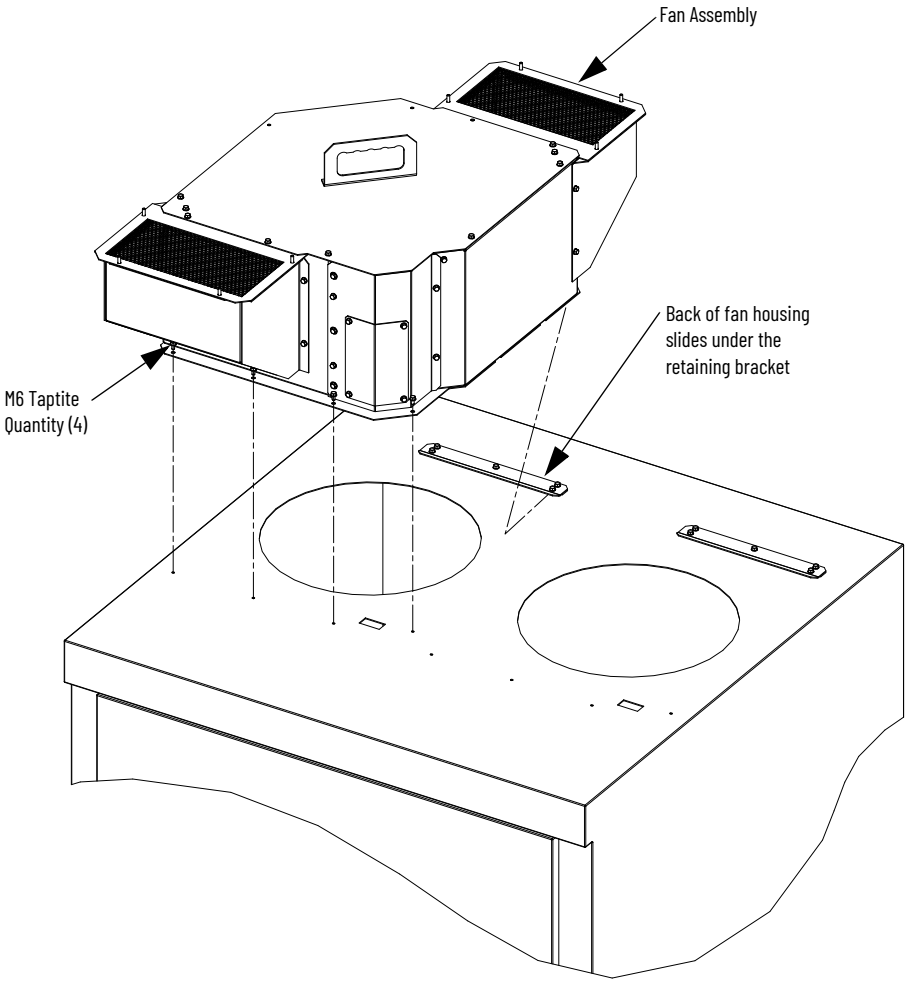

2. Slide the edge bottom edge of the fan housing under the retention bracket, and anchor the M6 hardware in the locations shown.

Assembling Fan Hoods

Figure 24 - Fan Hood Assembly (1)

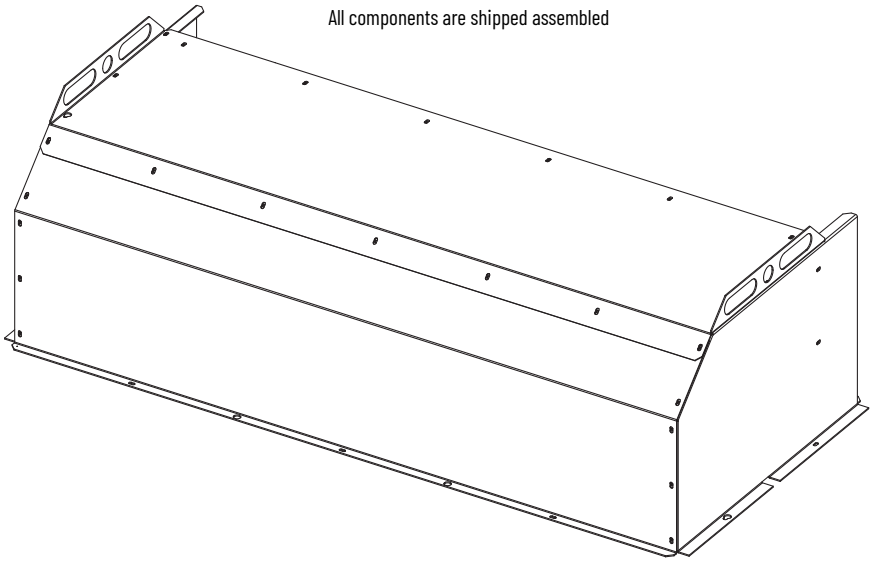

3. Locate the exhaust hood on top of the cabinet as show in Figure 25, and install the original cover plate set aside in Step 1.
4. Align the notches on the bottom flange toward the sides of the drive. Affix the assembly to the drive top plate, and tighten all hardware. See see Torque Requirements on page 95 for torque specifications.

For drives with an acoustic hood (shown in Figure 24), locate the exhaust hood (see Figure 25).

ATTENTION: To avoid potential damage or injury retrieve any screws that accidentally fall into the equipment.

Figure 25 - Fan Hood Installation

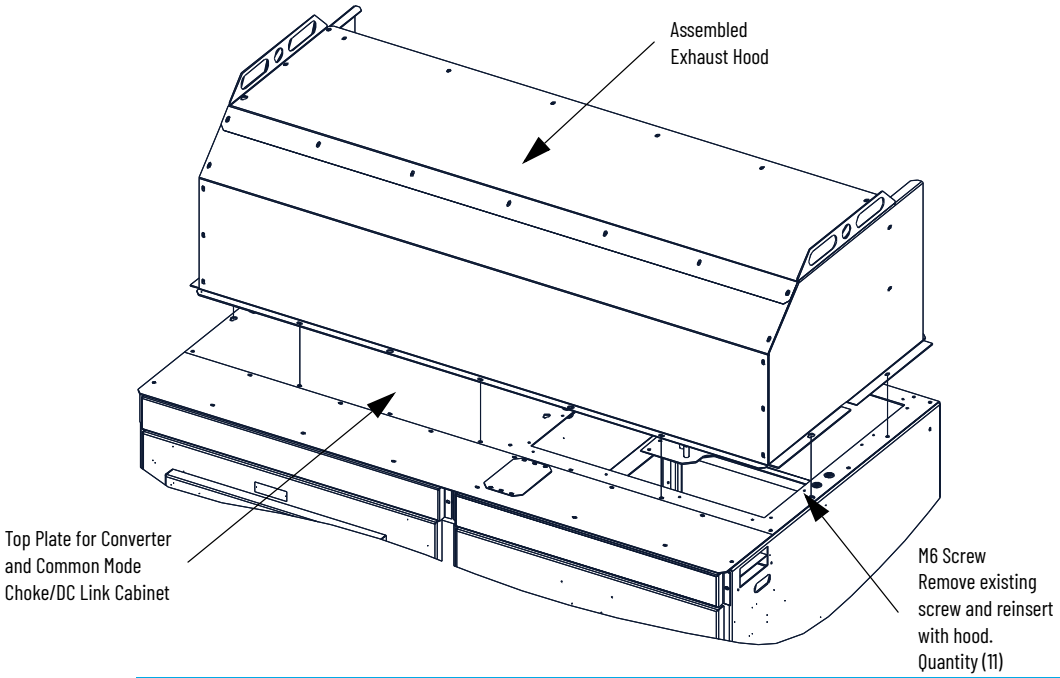

(1) This fan hood assembly is used on some PowerFlex 7000 drive models (R18TX, RPTX, ArcShield™, and RPDTD).

Installation of Redundant Fan Assembly

Redundant Fan components are shipped assembled (Figure 26). This redundant fan hood assembly is used on some PowerFlex 7000 drive models (R18TX, RPTX, ArcShield, and RPDTD).

Figure 26 - Redundant Fan Assembly

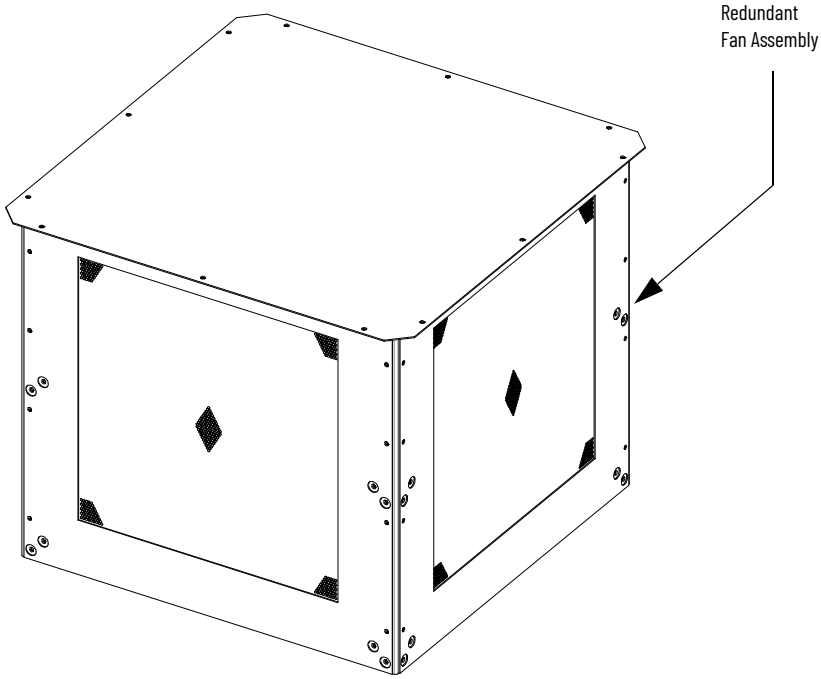

1. Remove the protective plate for the fan opening and discard all associated hardware.
2. Remove the top cover of the fan housing and set aside.
3. Remove the shipping cover plate on the bottom of the redundant fan assembly and discard.
4. Position the assembly over the opening, verifying that the locating hole on the housing base aligns with the front right side of the cabinet.
5. Align the mounting holes and wire harness connections.

Figure 27 - Redundant Fan Assembly Orientation

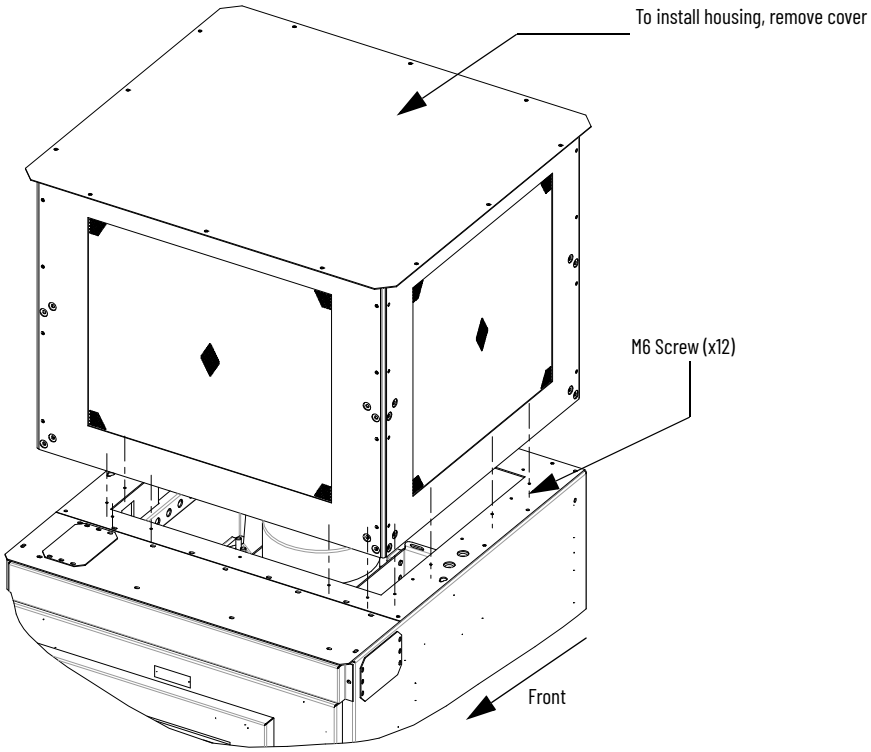

6. Affix the redundant fan assembly to the drive top plate with the M6 screws provided.
7. Connect the fan wire harness to fan.
8. Reinstall the top cover onto the fan housing and tighten all hardware.

Ziehl-Abegg Fan Installation

Beginning at the end of 2020, PowerFlex 7000 'B' Frame drives with Direct-to-Drive (DTD) configuration started to be shipped with Ziehl-Abegg main fan assemblies. This section is applicable to the DTD configurations only shipped after that time frame.Dependent on the PowerFlex 7000 amperage rating, either the GR56 or GR45 main cooling fan is supplied. Main cooling fans are fully assembled and shipped on a separate pallet. They must be installed on top of the drive, on site.

Figure 28 - Ziehl-Abegg Fan Assembly

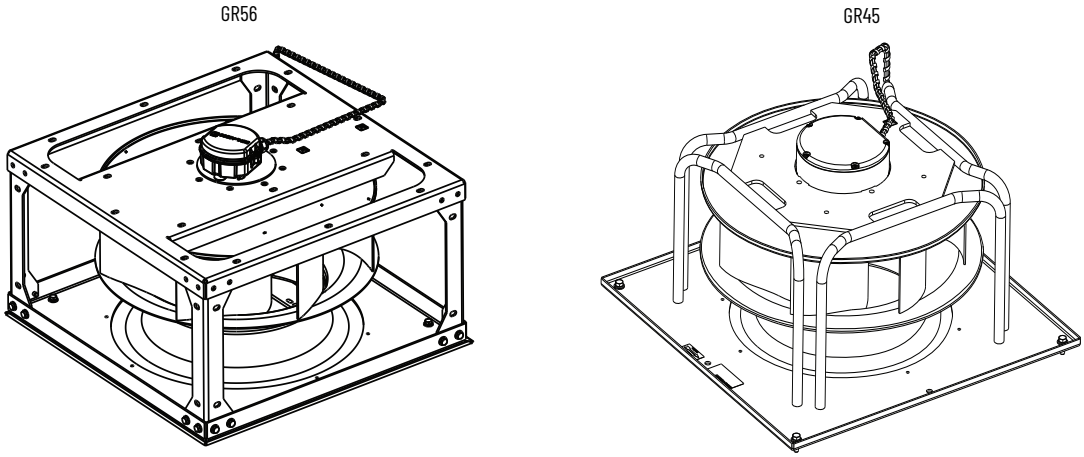

Figure 29 - Ziehl-Abegg GR45 Main Fan Assembly, Installed (CMC Cabinet, Front View)

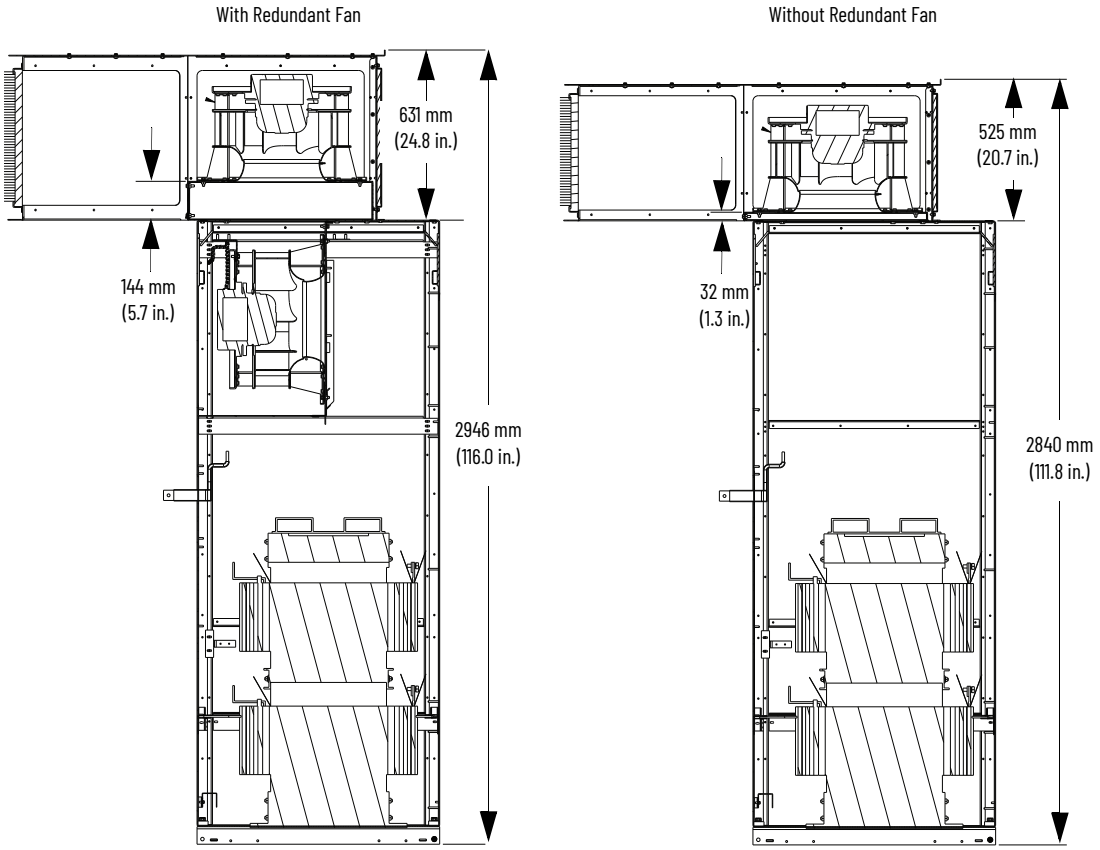

Figure 30 - Ziehl-Abegg GR56 Main Fan Assembly, Installed (CMC Cabinet, Front View)

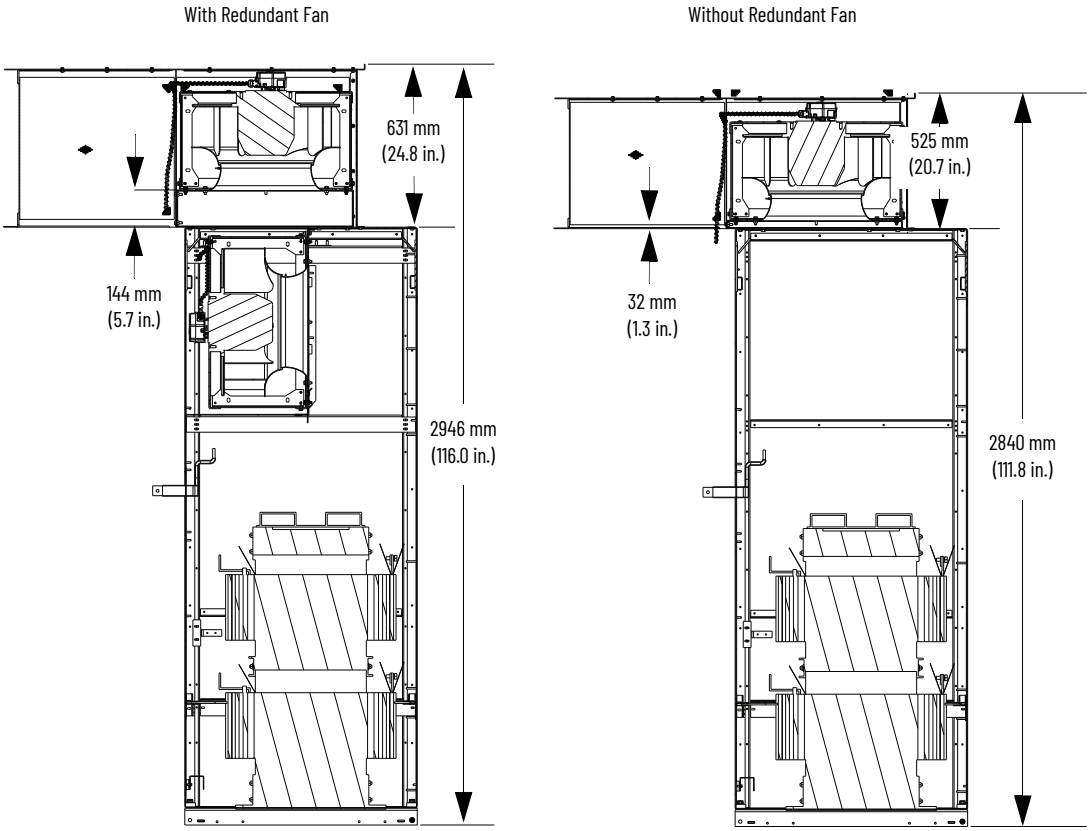

Remove Components and Hardware from Pallet

ATTENTION: Only qualified personnel familiar with PowerFlex 7000 products and associated machinery should plan or implement the installation, startup, and subsequent maintenance of the system. Failure to comply can result in personal injury and/or equipment damage.

Follow these steps to prepare for installation.

1. Cut the straps that secure the main fan assembly and fan hoods to the pallet.

   Retain the bags of hardware that are affixed to the top of the assembly.

IMPORTANT The hardware provided is labeled to indicate where it is used.

2. If applicable, remove additional fan hoods from the pallet.
3. Remove the hardware that secures the fan hood to the pallet.
4. Lift the fan hood off the main fan assembly and set aside.

Prepare the Drive for Installation

Follow these steps to prepare to install the main fan assembly on top of the drive.

1. Remove the top plate from the cabinet.

   Retain hardware.

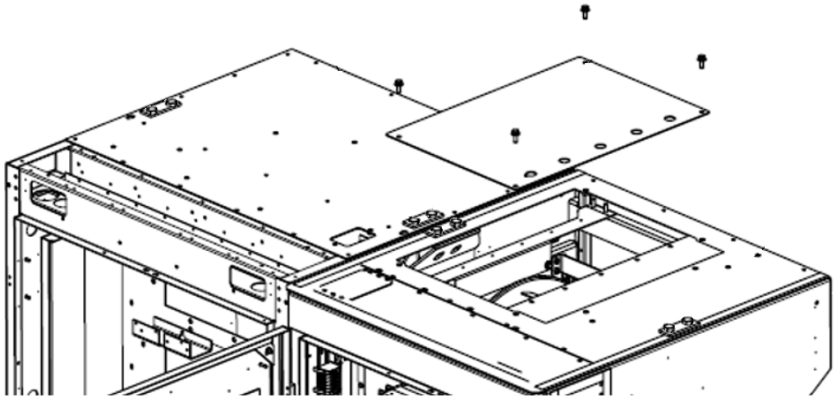

2. Remove the two lifting angle spacers and replace hardware.

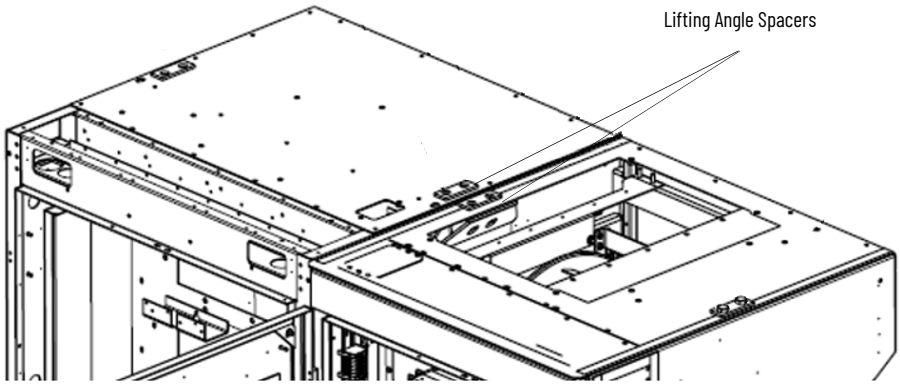

3. If necessary, remove the outer lifting angle spacers.

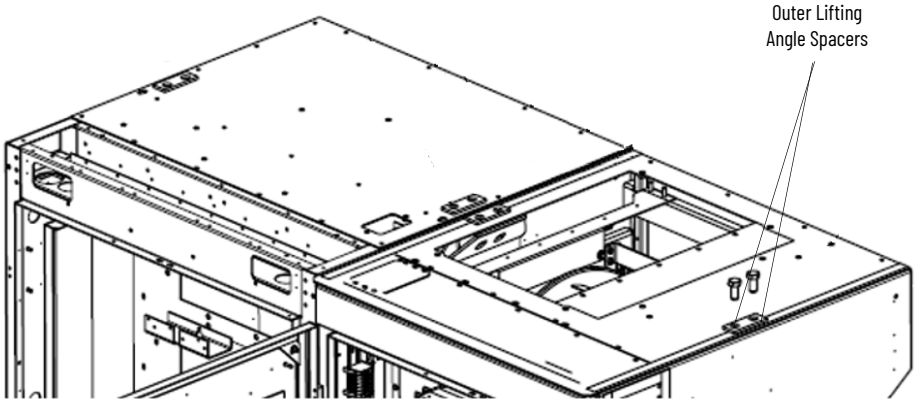

Install Fan Mounting Flange

Figure 31 - Fan Mounting Flange

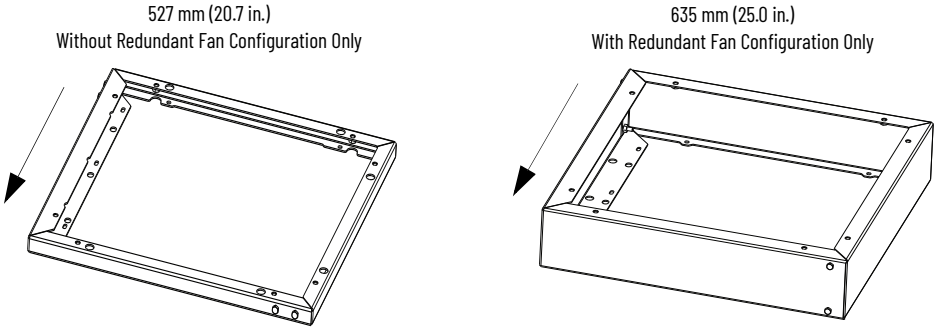

The fan mounting flange must be oriented so that the wider side of the flange is on the left, when viewed from the front.

Follow these steps to install the fan mounting flange.

1. Remove the fan mounting flange from the top of the main fan assembly.

   The fan mounting flange is attached with tie straps. Cut and discard the tie straps.

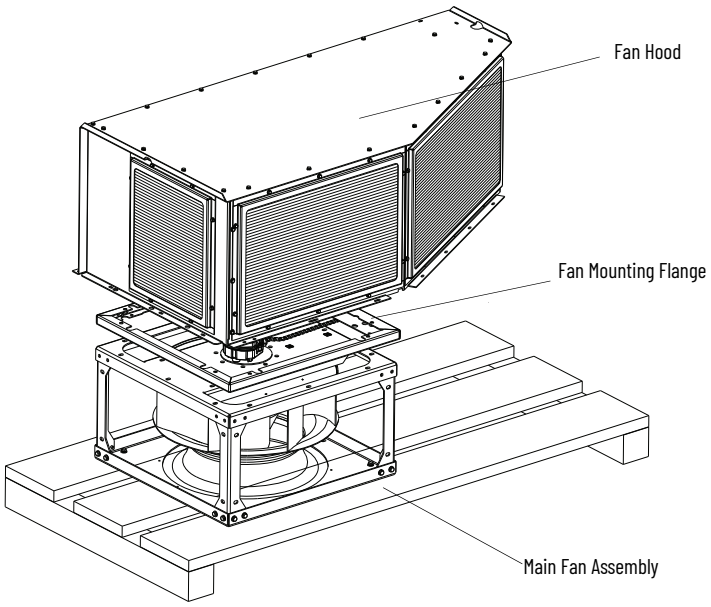

2. Install the fan mounting flange to the top of the drive using the hardware provided in the bag on the pallet.

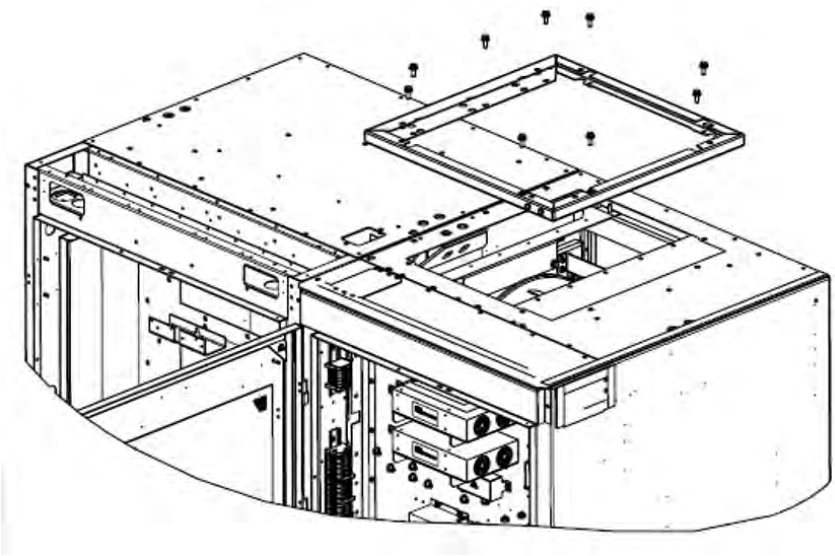

Single Fan Configuration
Fan Mounting Flange Shown

The fan mounting flange must be oriented so that the wider side of the flange is on the left, when viewed from the front.

Install Main Fan Assembly

ATTENTION: All equipment and hardware that is used to lift the main fan assembly must be properly sized and rated to lift and hold the weight of the main fan assembly safely. To guard against possible personal injury or equipment damage:
- Inspect all hardware for proper attachment before a main fan assembly is lifted.
- Do not allow any part of the main fan assembly or lift equipment to contact electrically charged conductors or components.
- Do not allow personnel or their limbs directly beneath the main fan assembly during a lift.

ATTENTION: To guard against death, serious personal injury, or equipment damage, do not subject the main fan assembly to high rates of acceleration or deceleration while lifting or transporting.

IMPORTANT The wire harness must be oriented so that it is on the left, when viewed from the front, otherwise the wiring may not reach the terminal block assembly. See graphic on page 40 for details.

All lifting equipment and components, such as hooks, bolts, lifts, slings, and chains, must be properly sized and rated to lift and hold the weight of main fan assemblies safely.

- GR45 Main Fan Assembly: 33 kg (73 lb)
- GR56 Main Fan Assembly: 72 kg (159 lb)

Follow these steps to install the main fan assembly to the drive.

1. Attach the slings to the load-rated overhead crane, hoist, or similar lifting device.
2. Loop the slings through either side of the main fan assembly housing.

To reduce tension on the rigging and compression to the main fan assembly, ensure that the angle between the slings and vertical plane does not exceed 40°.

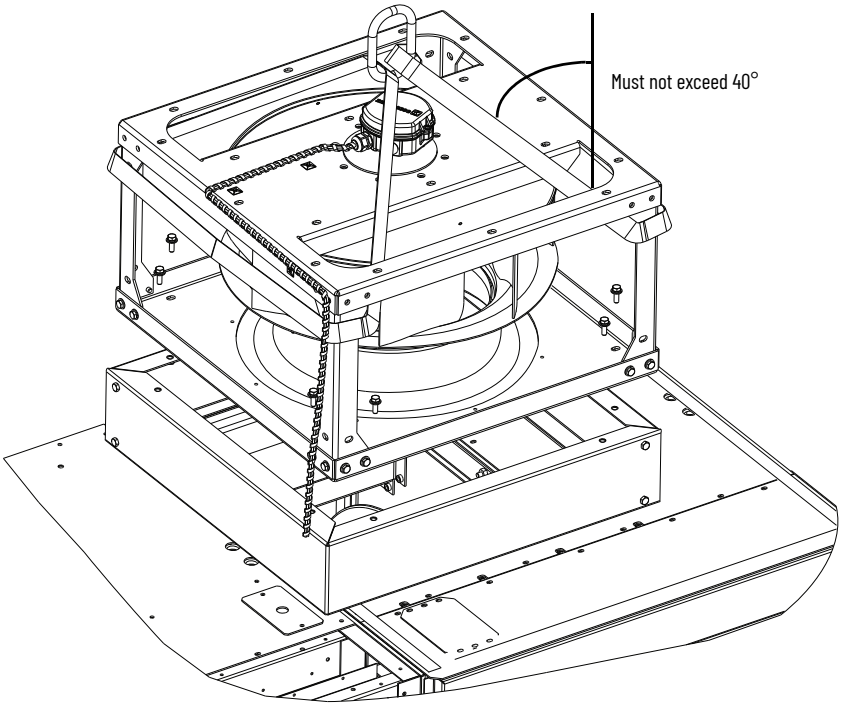

3. Slowly test lift the main fan assembly a short distance off the floor and observe the orientation of the load. Ensure that the main fan assembly is supported in an upright orientation.

If necessary, lower the load to the floor and adjust the rigging lengths to compensate for any unequal weight distribution to achieve an upright orientation.

4. Lift and transport the main fan assembly to the installation location on top of the fan mounting flange.

ATTENTION: If you are not able to use a crane, hoist, or lifting device, you must have at least two people to lift the main fan assembly. Wear appropriate personal protection equipment (PPE), including gloves, safety glasses, and safety shoes.

5. Secure the main fan assembly to the fan mounting flange using eight M8 x 25 hardware.

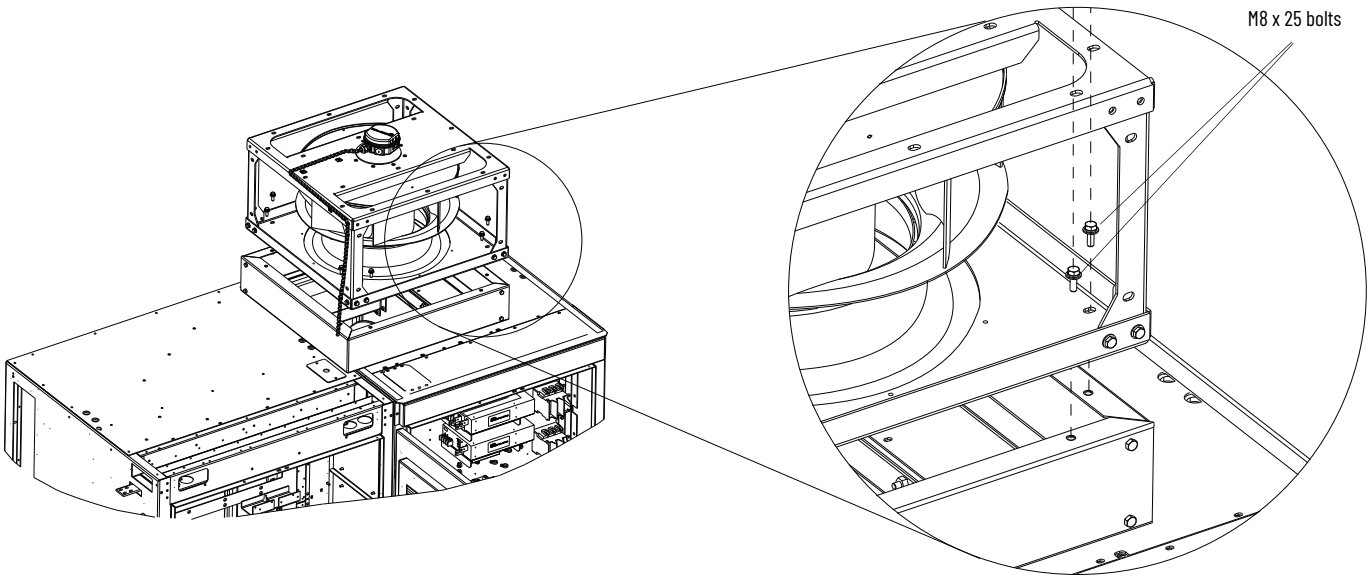

Terminate the Main Fan Assembly Power Cables in the Converter Cabinet

IMPORTANT Prior to April 2023, the main fan assembly power cables were terminated in the common mode choke cabinet. If your cabinets are configured this way, see Terminate the Main Fan Assembly Power Cables in the Common Mode Choke Cabinet on page 42.

Follow these steps to route the main fan assembly power cables to the terminal blocks in the converter cabinet.

1. Insert the main fan assembly power cables down through the hole in the cover plate on top of the converter cabinet.

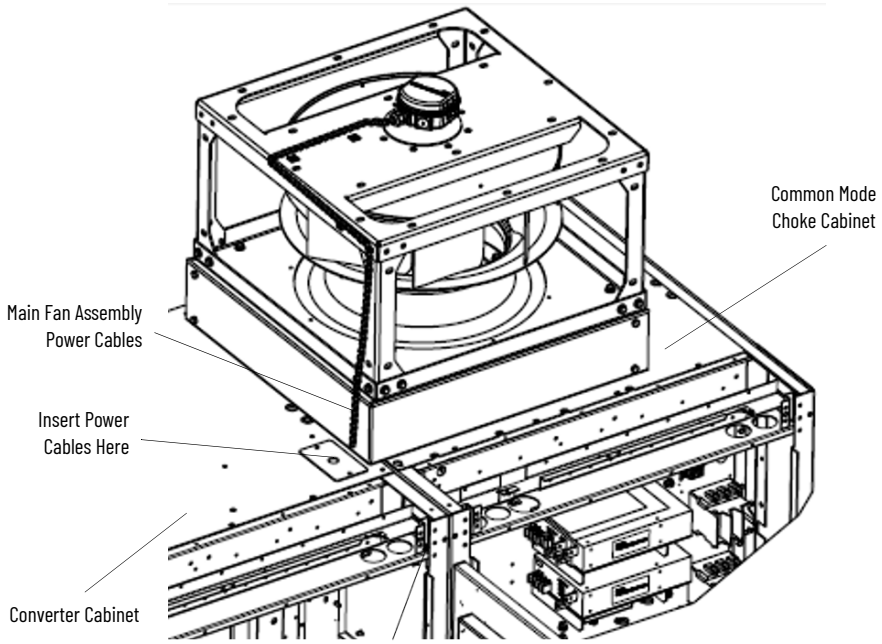

2. Terminate the main fan assembly power cables at the terminal blocks in the converter cabinet. Refer to your electrical drawings for termination points.
3. Connect the ground wire to the grounding bar.

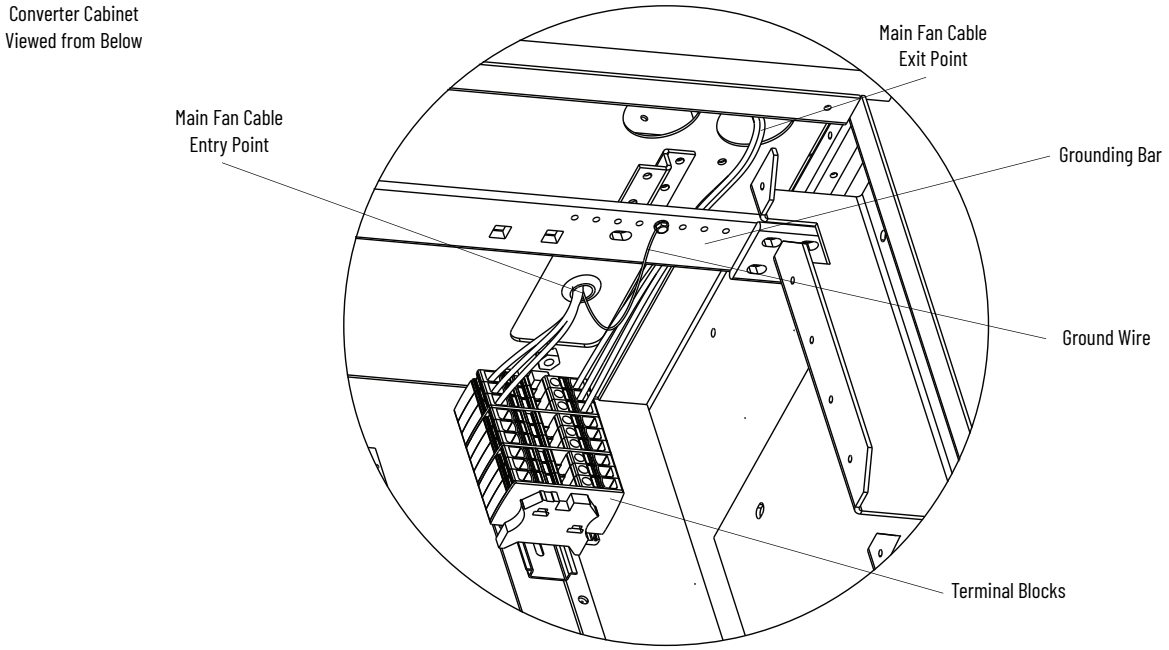

Terminate the Main Fan Assembly Power Cables in the Common Mode Choke Cabinet

IMPORTANT Starting in April 2023, the main fan assembly power cables are terminated in the converter cabinet. If your cabinets are configured this way, see Terminate the Main Fan Assembly Power Cables in the Converter Cabinet on page 41.

Follow these steps to route the main fan assembly power cables to the terminal blocks in the low voltage panel.

1. Insert the main fan assembly power cables down through the hole in the cover plate on top of the drive.

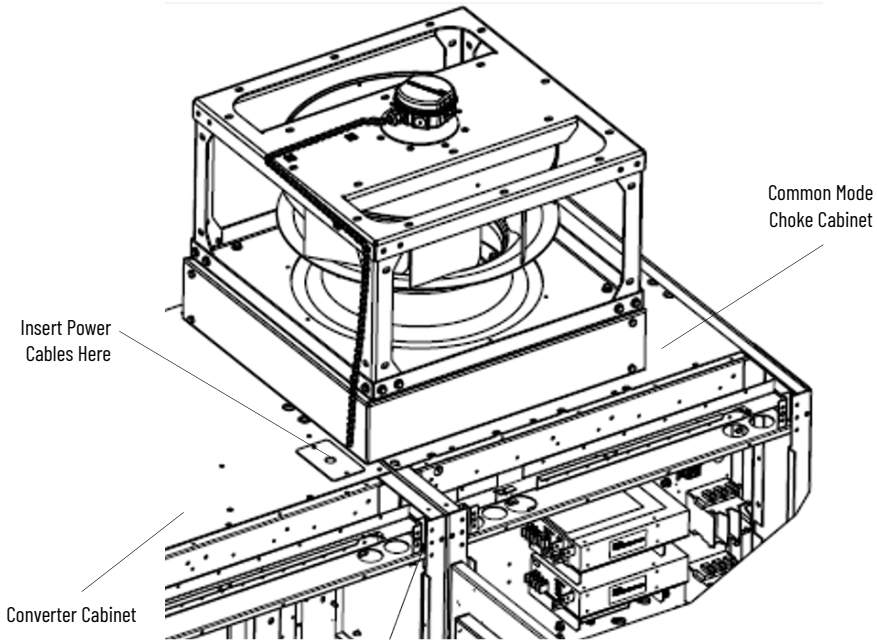

2. Feed the main fan assembly power cables to the front of the converter cabinet ABOVE the grounding bar and back up through the grommeted opening at the front into the low voltage wireway, which runs along the top/front of the drive enclosure.

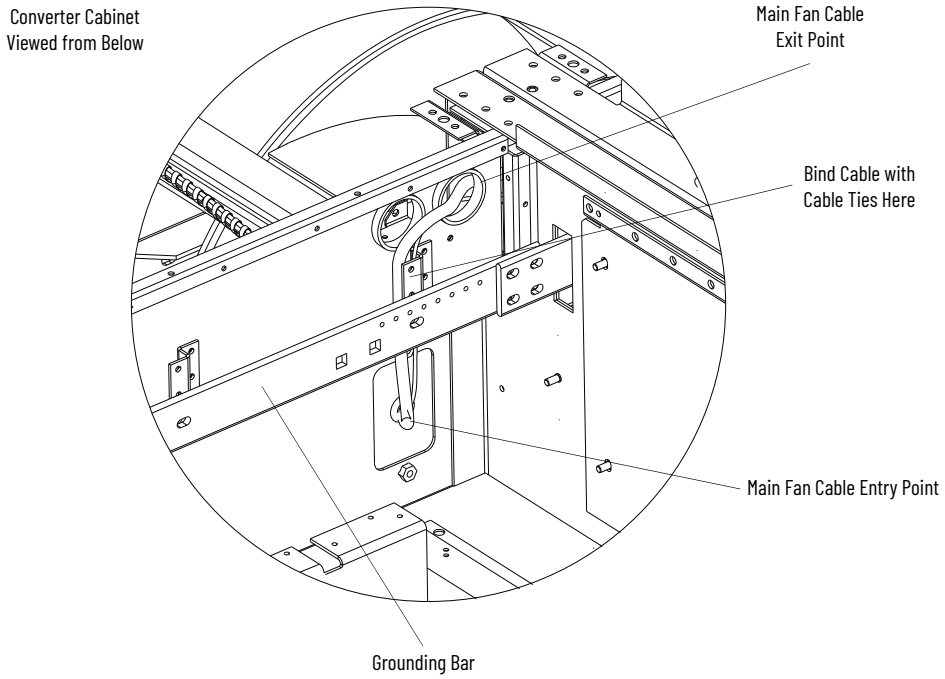

3. Route the main fan assembly power cables along the length of the low voltage wireway to the LV panel entry point.

IMPORTANT Use zip ties at several points so the main fan assembly power cables do not move.

ATTENTION: The main fan assembly power cables must not touch any sharp edges.

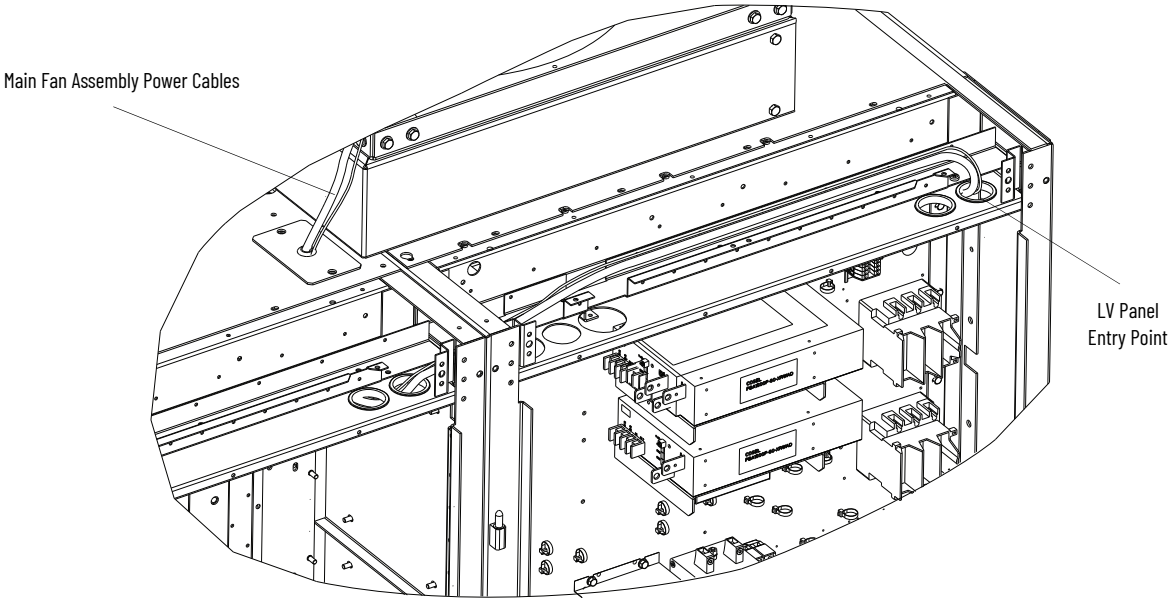

4. Feed the main fan assembly power cables into the LV panel.
5. Terminate the main fan assembly power cables at the terminal blocks in the LV panel.

   Refer to your electrical drawings for termination points.

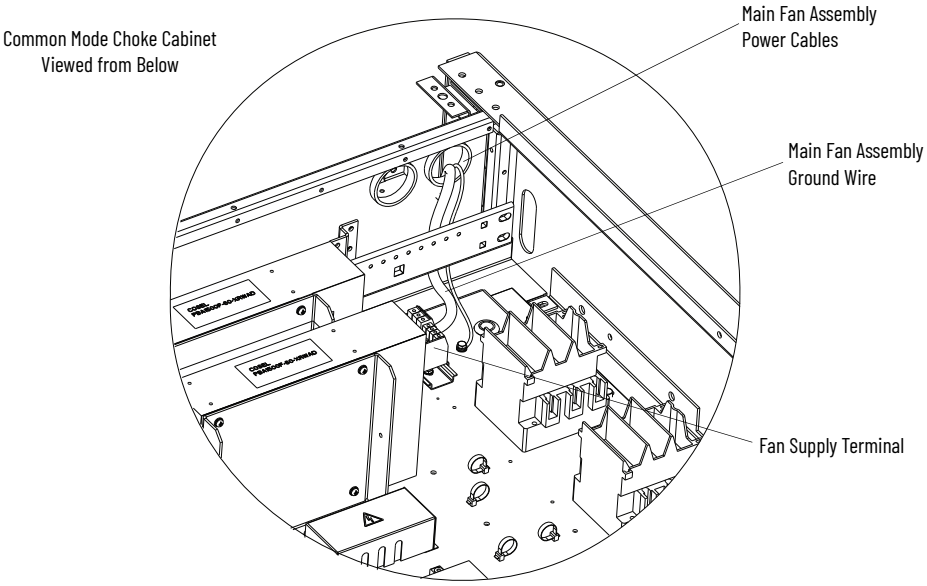

6. Connect the ground wire.

Install the Fan Hood

ATTENTION: All equipment and hardware that is used to lift the acoustic fan hood must be properly sized and rated to lift and hold the weight of the fan hood safely. To guard against possible personal injury or equipment damage:
- Inspect all hardware for proper attachment before the acoustic fan hood is lifted.
- Do not allow any part of the acoustic fan hood or lift equipment to contact electrically charged conductors or components.
- Do not allow personnel or their limbs directly beneath the acoustic fan hood during a lift.

ATTENTION: To guard against death, serious personal injury, or equipment damage, do not subject the fan hood to high rates of acceleration or deceleration while lifting or transporting.

All lifting equipment and components, such as hooks, bolts, lifts, slings, and chains, must be properly sized and rated to lift and hold the weight of the fan hood safely.

Table 3 - Fan Hood Heights and Weights

IP Rating	Height, mm (in.)	Weight, kg (lb)
IP21	527 (20.7)	65 (143)
	635 (25.0)	74 (163)
IP42	527 (20.7)	142 (313)
	635 (25.0)	164 (362)

Follow these steps to install the fan hood.

1. Attach the rigging to the overhead crane, hoist, or similar lifting device.

ATTENTION: Do not pass straps or cables through the lifting holes in the structural angles.

2. Attach the rigging to the lifting provisions using slings with load-rated hooks or shackles.

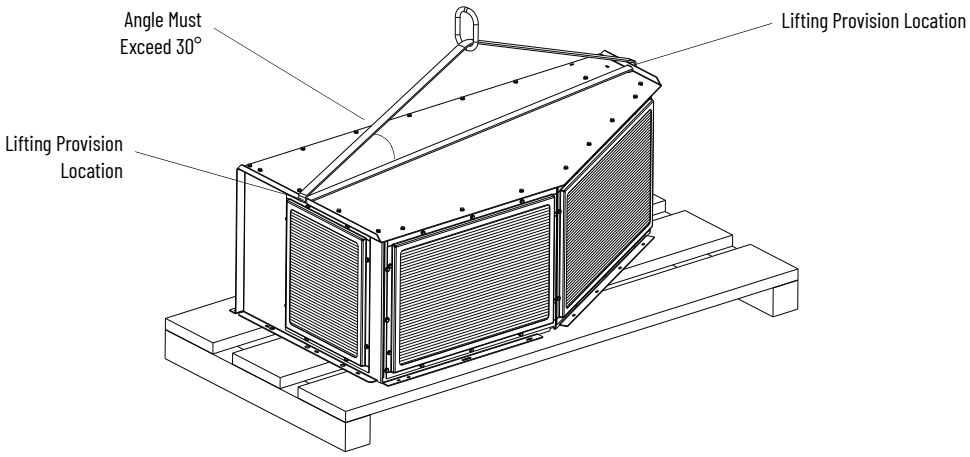

3. Slowly test lift the fan hood a short distance off the floor and observe the orientation of the load. The fan hood must be supported in a level orientation.
4. Place the fan hood in position on top of the cabinet.
5. If you have restricted clearance on top of the drive and there is insufficient room to hoist the fan hood over the fan, follow these steps to install the fan hood.
   a. Remove the 12 bolts from the side of the fan hood and retain hardware.
   b. Remove the side plate and set aside.

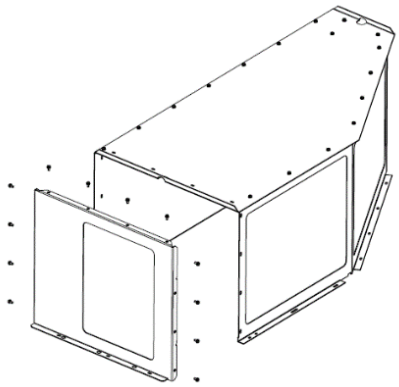

   c. Align the fan hood adjacent to the main fan assembly on top of the cabinet.
   d. Slide the fan hood over the main fan assembly.
   e. Align the hardware holes on the fan hood with the holes in the top off the cabinet.
   f. Replace the fan hood assembly side panel and install using the hardware that initially fastened it.

6. Install the fan hood with supplied M6X20 bolts.

External Ducting

The PowerFlex 7000 design conducts exhaust air outside of the control room. Make special consideration for conditions present in the atmosphere outside the control room.

ATTENTION: If the drive configuration includes multiple exhaust outlets, duct each outlet separately to help prevent back-feeding hot exhaust into the drive. Heatpipe drives are excluded from this provision since each fan assembly is provided with back draft dampers.

These requirements are mandatory for systems that externally duct the exhaust air and draw clean outside air:

- An external duct with an external filtering system must not add more than 50 Pa (0.2 in. water gauge) drop to the PowerFlex 7000 drive airflow system. A minimum 600 mm (24 in.) of clearance from an exhaust vent is required for heat pipe models.
- The control room must provide slightly more make-up air, to create a pressurized room. Pressurization keeps unfiltered air from being drawn into the room.
- The drive is intended to operate in conditions with no special precautions to minimize the presence of sand or dust, but not close to sand or dust sources. IEC 60721-1 defines the minimum as less than 0.2 mg/m^3 of dust. If outside air does not meet this condition, filter the air to ASHRAE (American Society of Heating, Refrigeration and Air-Conditioning Engineers) Standard 52.2 MERV 11 (Minimum Efficiency Reporting Value). This filtration reduces 65...80% of the particulate in Range 2 (1.0...3.0 µm) and 85% of the particulate in Range 3 (3.0...10.0 µm). Clean or change filters regularly to help maintain proper flow.
- The make-up air must be between 2 °C (36 °F) and the maximum ambient temperature for which the PowerFlex 7000 drive has been rated.
- Relative humidity must be less than 95% noncondensing.
- Approximately 10% of drive losses can still be rejected into the control room; address this issue, when required, to maintain the temperature in the control room within specification.
- Failure to maintain the proper flow of air for cooling into the control room can result in the drive stopping on low differential pressure across the heat sinks.

Connect External Ducting

There are two potential methods for connecting external ducting to your PowerFlex 7000 'B' frame drive, horizontal outlet and top outlet exit.

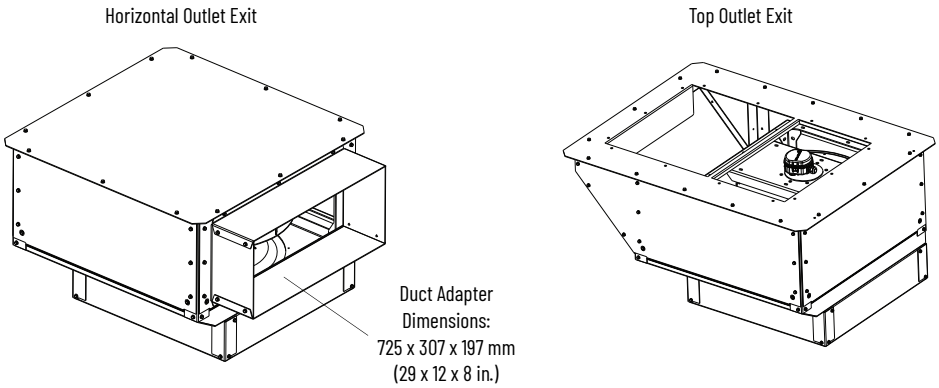

Using identical fans, the air flow for either configuration is the same.

ATTENTION: Only qualified personnel familiar with PowerFlex 7000 products and associated machinery should plan or implement the installation, startup, and subsequent maintenance of the system. Failure to comply can result in personal injury and/or equipment damage.

Install Horizontal Outlet Exit Duct

Follow these instructions to install horizontal outlet exit duct. The illustrations below show the exhaust air exiting to the right, but exhaust air can be ducted from any side of the exhaust fan hood by changing the location of the duct adapter.

1. See the fan assembly instructions in Install Main Fan Assembly on page 39 and Terminate the Main Fan Assembly Power Cables in the Converter Cabinet on page 41.
2. Remove the hardware from the side of the exhaust hood where the air will exit. Set the plate aside.

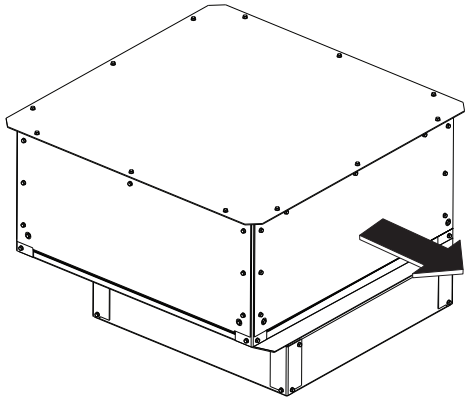

3. Attach the duct adapter with duct interface to the fan hood using nine M6 bolts (6 N•m [4 lb•ft]).

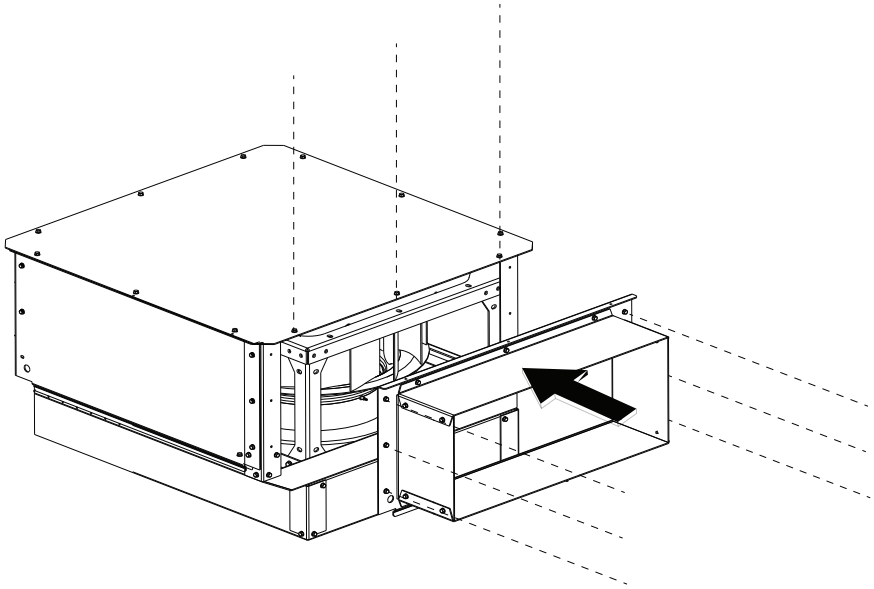

4. Drill holes on the duct adapter per your duct configuration.

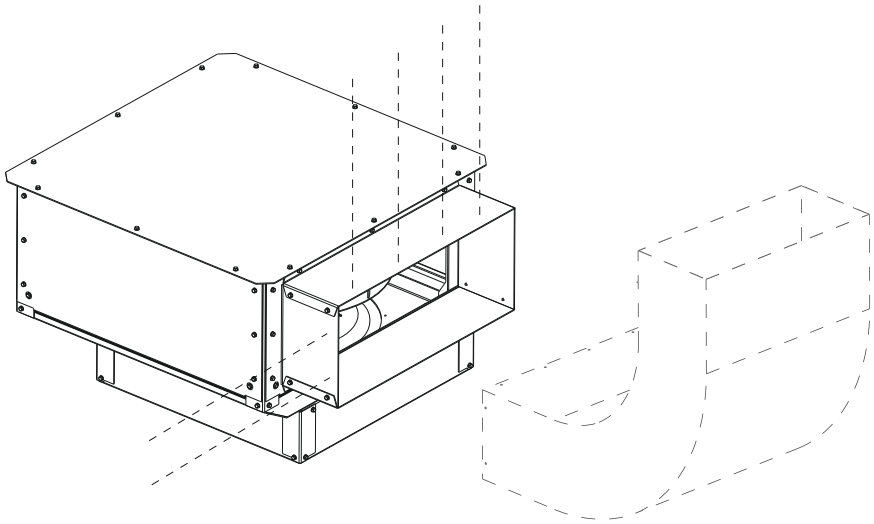

5. Attach your duct to the duct adapter.

IMPORTANT	Your duct can be connected to any side of the fan hood by changing the location of the duct adapter as indicated below.

IMPORTANT	The installer is responsible for following best practices when installing duct work and ensuring a proper air-tight seal is made.

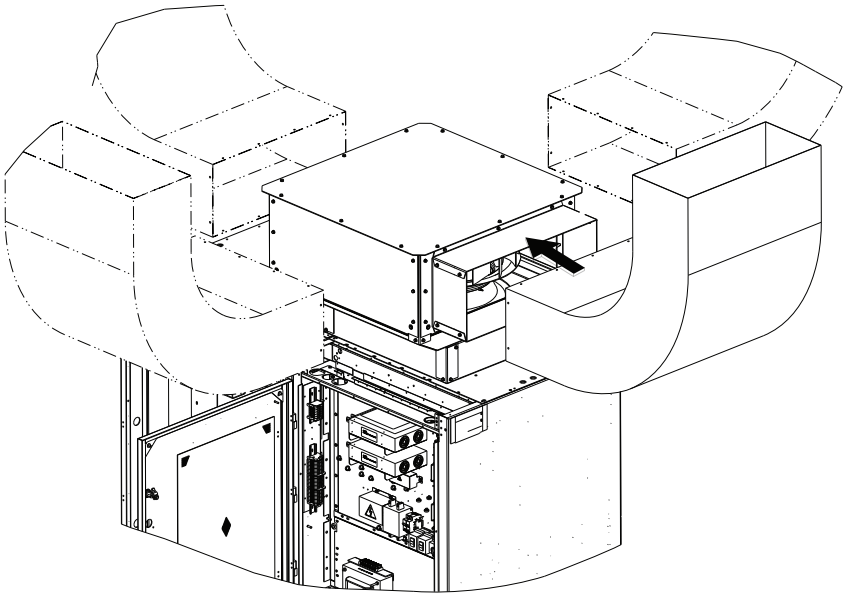

Install Top Outlet Exit Duct

Follow these instructions to install the top exit outlet duct.

1. See the fan assembly instructions in Install Main Fan Assembly on page 39 and Terminate the Main Fan Assembly Power Cables in the Converter Cabinet on page 41.
2. Remove the hardware from the top exit duct adapter and right side cover plate.

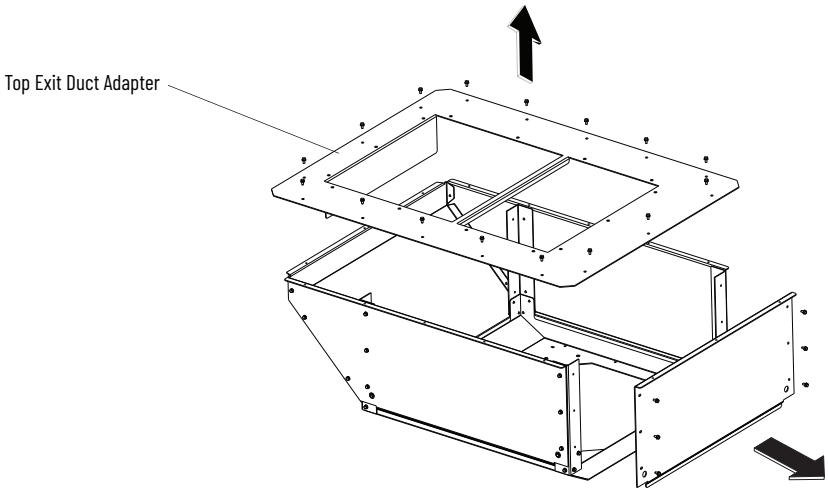

3. Install the partial fan hood (without top exit duct adapter or side plate) on top of the fan using M6 bolts (6 N•m [4 lb•ft]).

4. Drill holes in the top exit duct adapter per the dimensions below.

ATTENTION: Do NOT drill holes in the top exit duct adapter when it is on the fan. Filings or other miscellaneous debris could fall into the fan enclosure and cause damage.

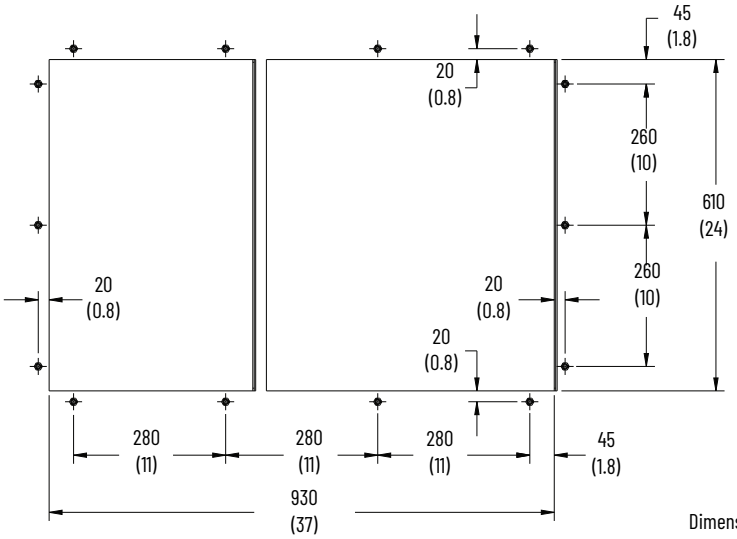

Dimensions are in mm (in.).

If space allows, it would be easier to drill the holes in the top exit duct adapter on a workbench. Place the top exit duct adapter on the first section of customer duct and drill through the holes in the top exit duct adapter into the flange on the first section of duct. Then place the gasket and affix the first section of duct to the top exit duct adapter. Install both assembled parts together on top of the drive.

5. Install top exit duct adapter and side plate to the fan hood using M6 bolts (6 N•m [4 lb•ft]).

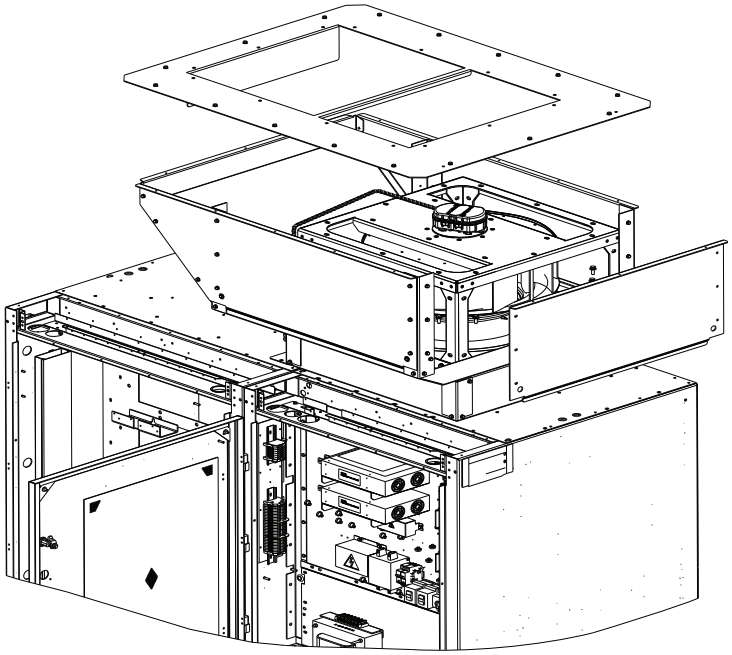

6. Install a customer-supplied gasket to the top exit duct adapter.

IMPORTANT The installer is responsible for following best practices when installing the gasket to ensure a proper air tight seal is made.

7. Align and install your duct with the top exit duct adapter using customer-supplied M6 hardware (6 N•m [4 lb•ft]).

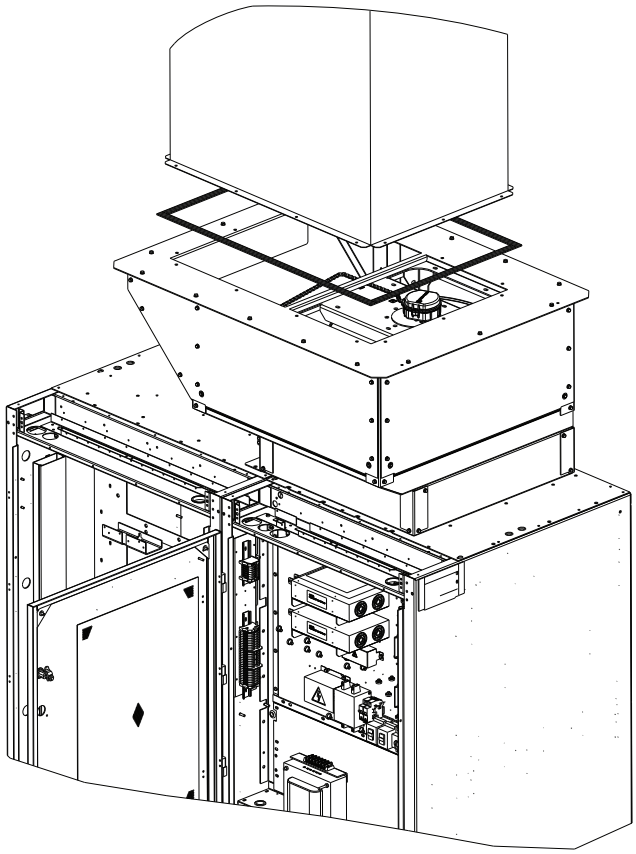

Power Cabling Access

The drive cabinetry provides for either the top, or bottom, power cable entry.

Cable access plates are available on the top and bottom plates of the connection cabinet; check your customer-specific dimension drawings for details.

To access the power cable terminations:

1. Open the door of the low voltage control compartment, which is hinged on its left side. The power terminals are behind the compartment.

   The key interlock stops the compartment from swinging open unless the medium voltage source is locked out.
2. Turn each of the three latches on the right side of the compartment one-quarter turn, use an 8 mm hexagonal key wrench. There is a pull handle that is provided on the right side of the low voltage compartment.
3. Slowly pull the handle so the compartment swings out. The power terminals are now visible.

The access plates for power cables can require modification to suit the requirements. To maintain the environmental rating of the enclosure, use the appropriate connectors.

Figure 32 - Swing-out of Low Voltage Compartment (Heat Sink and Heat Pipe Models)

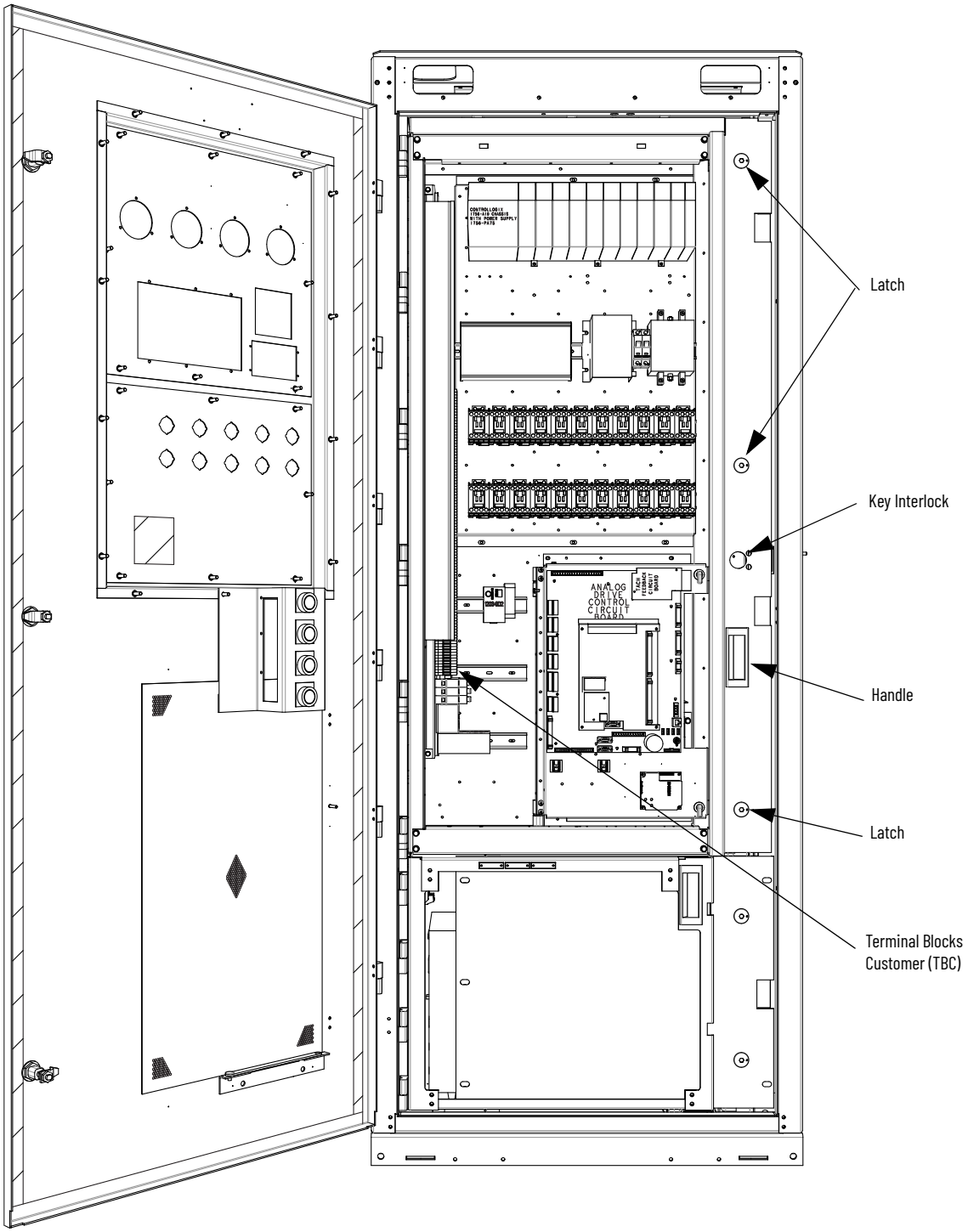

Figure 33 - Access to Power Terminals, AFE (Heat Sink Model)

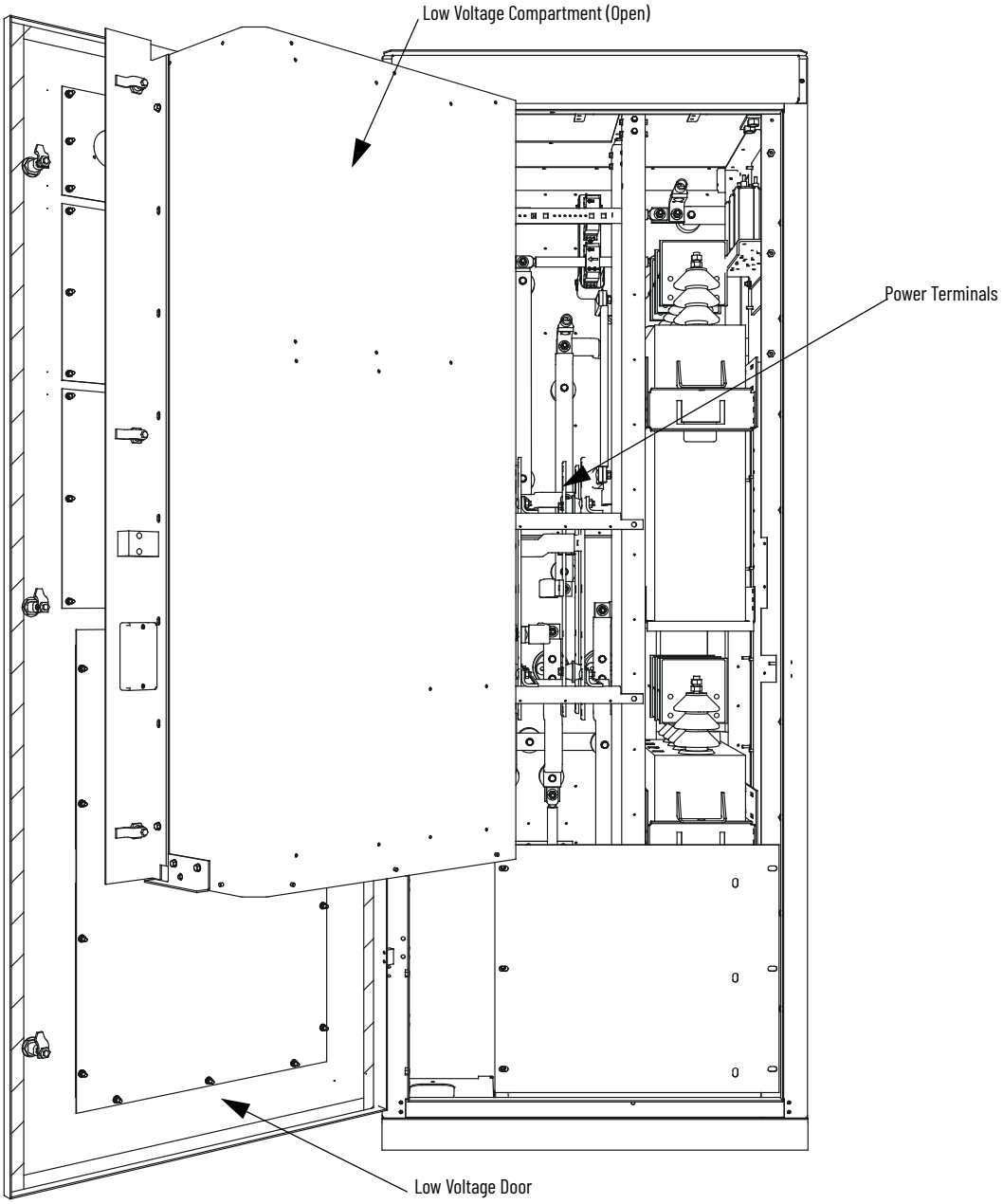

Figure 34 - Access to Power Terminals, AFE (Arc Resistant Heat Sink Model)

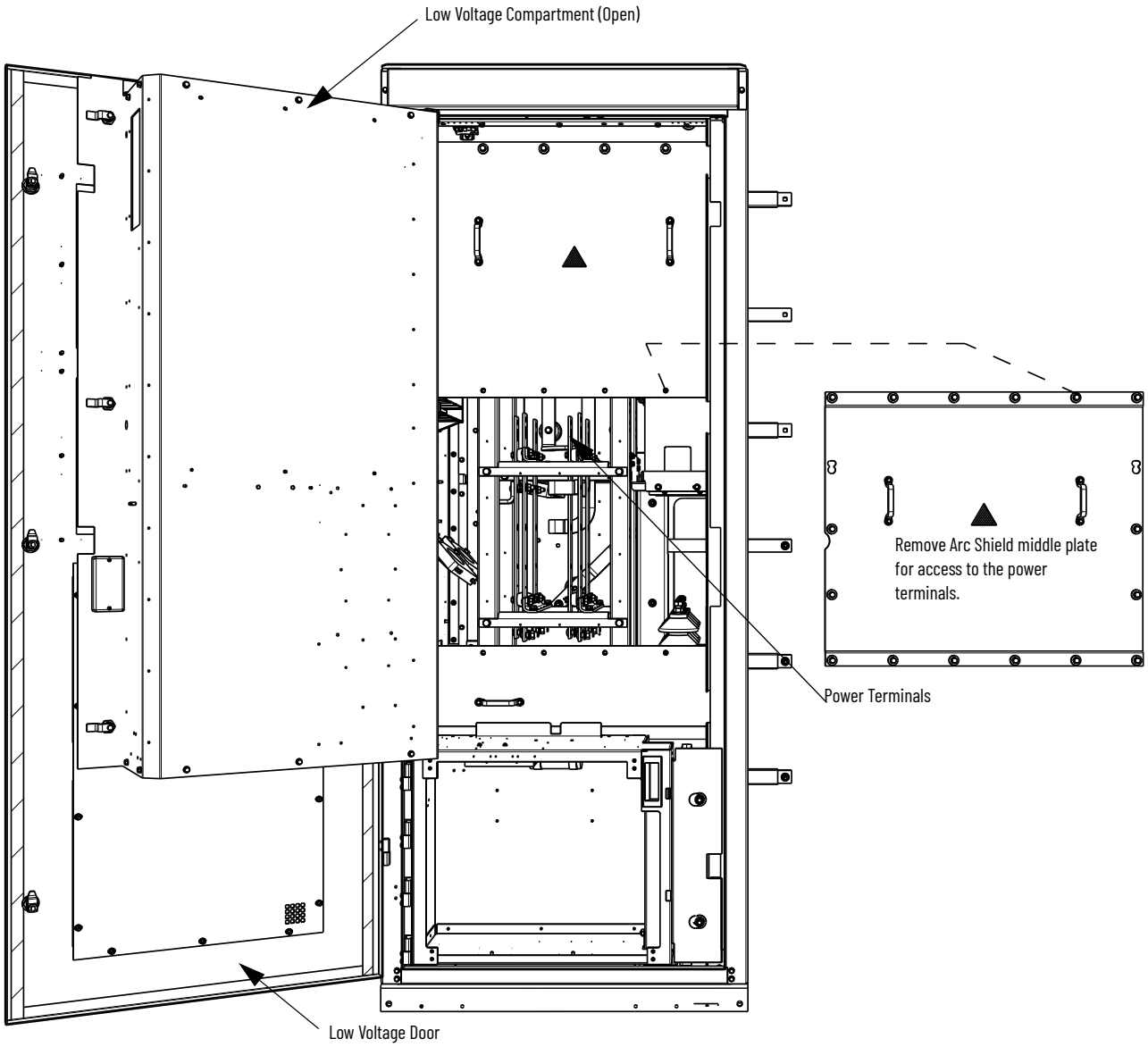

Power Connections

Verify that:

1. Interlocking with the upstream power source is installed and functioning correctly.
2. All equipment power connections meet with local electrical codes.

The drive provides for cable lugs, Table 4 details the power terminals.

Table 4 - Incoming Connections

Drives with AFE Rectifiers:	2U, 2V, 2 W
Secondary (d0)	2U, 2V, 2 W
Secondary (d-20)	3U, 3V, 3 W
Secondary (d+20)	4U, 4V, 4 W
Motor Connections	U, V, W
Drives with AFE Rectifiers:	2U, 2V, 2 W

Installation Requirements for Power Cabling

These drawings illustrate:

- A front view of the 900 mm input cabinet for AFE drives.
- Typical line cable-termination assemblies (18-pulse).

Figure 35 - Front View of 900 mm Control/Cabling Cabinet, AFE (Heat pipe Model)

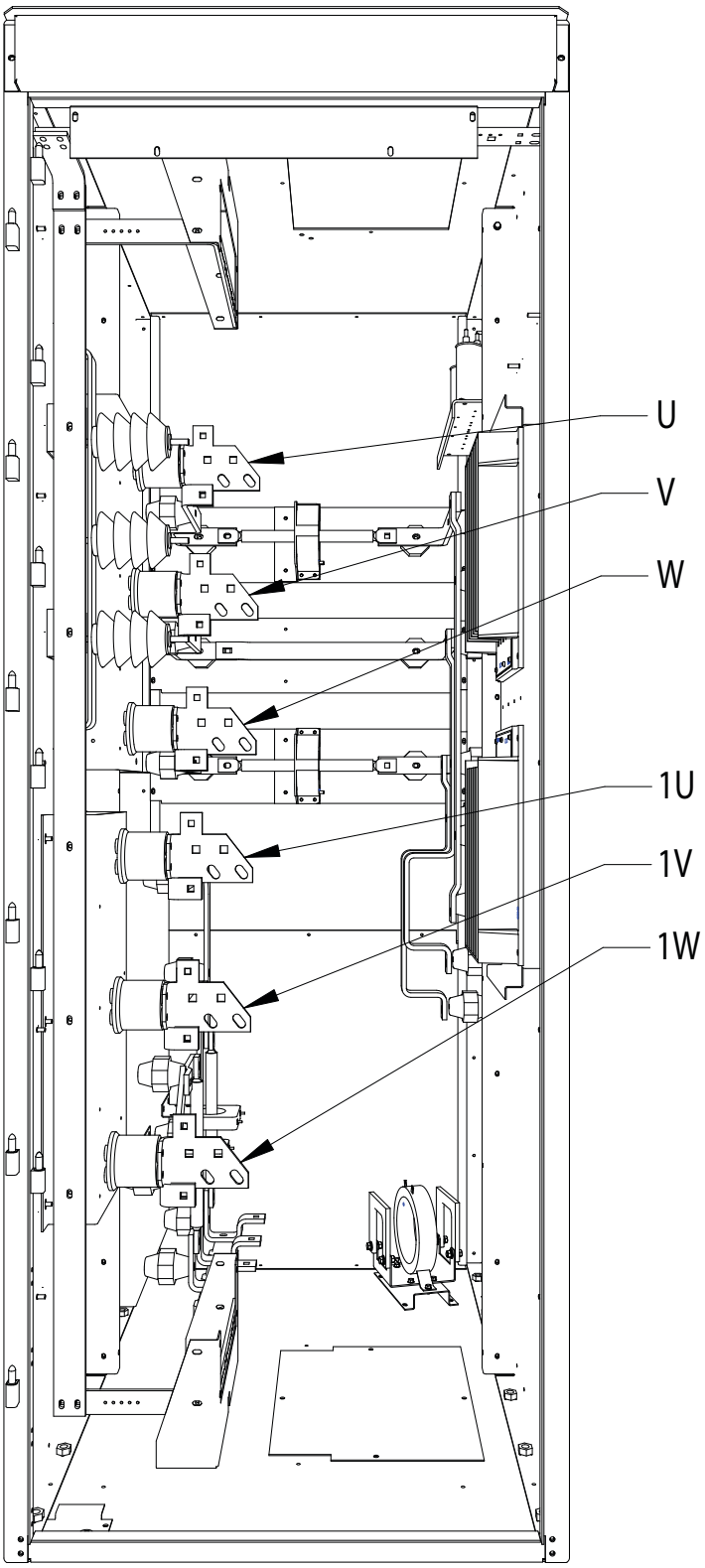

Figure 36 - Detail Power Terminal Dimensions (Heat Sink AFE Rectifier)

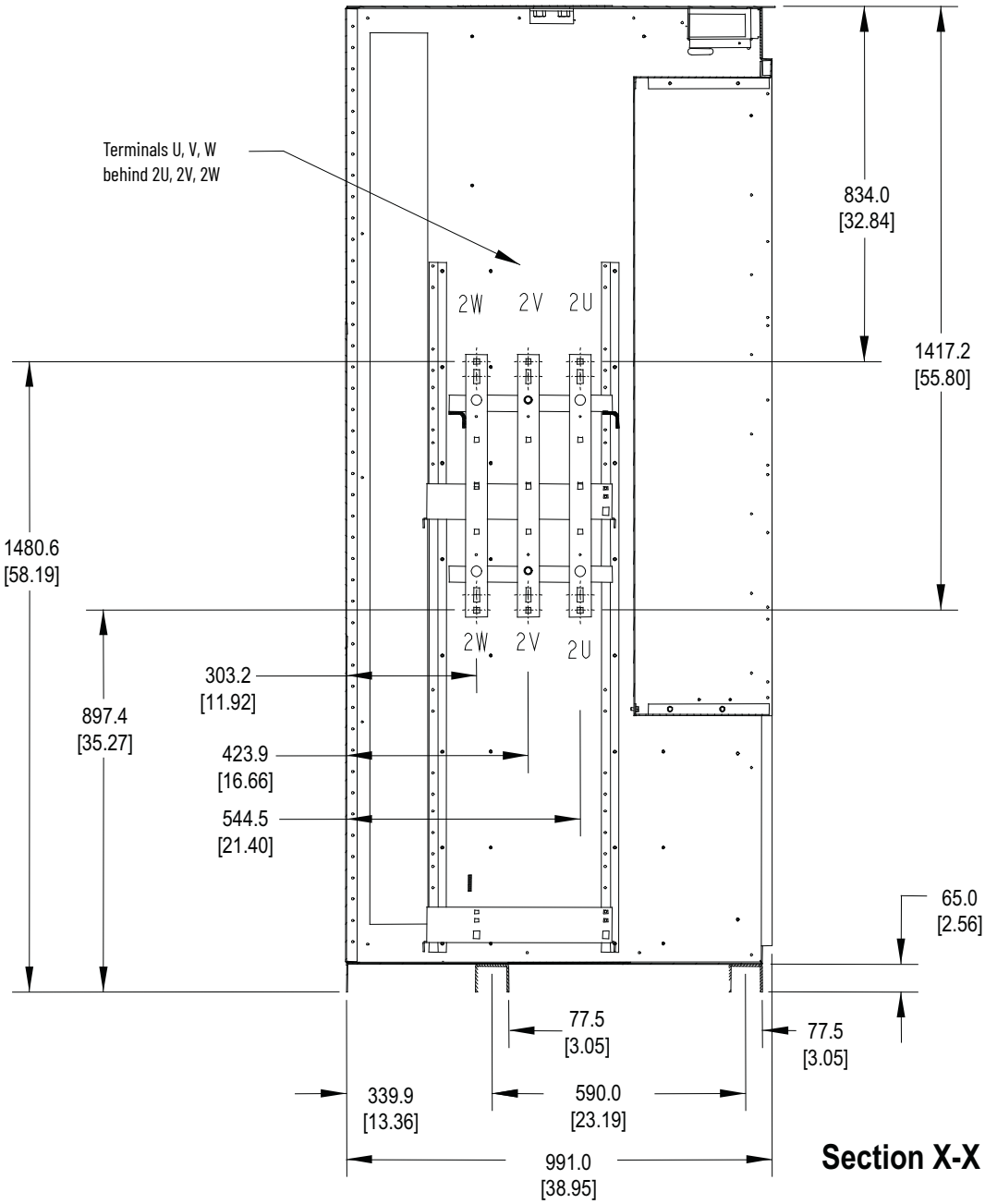

Confirm the torque that is applied on all power connections is correct. See see Torque Requirements on page 95 for more information.

The drive provides for grounding cable shields and stress cones near the power terminals.

Power and Control Wiring

Drive lineups (that is drive and input starter) shipped in two or more sections to make the require reconnection for power and control wiring easier. After joining the sections, reconnect the power and control wiring as shown in the schematic drawings that are provided with the drive.

Control Cables

1. Locate the control cable entry/exit near the terminal block 'TBC'.
2. Route connections along the empty side of the TBC terminals.

   These terminals accept a maximum AWG #14 wire gauge.
3. Connect the low voltage signals (includes 4...20 mA) using twisted shielded cable, with a minimum AWG #18 wire gauge. Based on using a W4 terminal block for customer connections, comparable wire sizes would be 0.5...4 mm^2 as equivalent to #22-#10 AWG.

Two encoder inputs accommodate a quadrature encoder (senses motor direction). The encoder power supply is isolated and provides 15V and a ground reference. Many encoder outputs have an open collector output, which requires an additional pull-up resistor to feed proper signals to the system logic. See see Torque Requirements on page 95 to see if one is required.

IMPORTANT	Connect low voltage signals using twisted shielded cable, connecting the shield at the signal source end only. Wrap the shield at the other end with electrical tape and isolate it. Make connections as shown on the drawings provided.

Encoder Installation Guidelines

Transmission problems from the encoder to the drive include signal distortion and electrical noise. Either problem can result in a gain or loss of encoder data counts (quadrature encoders) or corrupt positional data (absolute encoders). This section provides general guidelines and recommended practices for field-installed equipment, and applies to either encoder board and both quadrature and absolute encoders.

Protection from Radiated and Conducted Noise

Take care when connecting and routing power and signal wiring on a machine or system. Radiated noise from nearby relays, solenoids, transformers, non-linear loads (such as motor drives) can couple onto signal wires to produce undesired pulses. The encoder itself can also induce noise into adjacent signal lines.

To avoid radiated or conducted noise, run power and signal lines separately with a minimum distance between them of at least 75 mm (3 in.). If they must overlap somewhere in the system, run the power lines at 90° to the signal lines. Signal lines must use twisted pair shielded cable and run in a separate conduit that is grounded to the building ground.

Encoder wires and shields must maintain continuity from the encoder to the drive. Avoid using a terminal block in a junction box as it has the potential to create radiated noise and ground loops.

Ground the encoder case to the building ground for proper operation. If you cannot make a ground connection through the mounting bracket/machine ground, most encoders provide for a case ground connection through the connector/cable pair.

IMPORTANT DO NOT ground the encoder case through the machine and cable wiring. Use low capacitance wires (≤ 40 pF/ft) with 100% shield coverage for long cable runs. Connect the shield ground only at the drive end, see Figure 37.

Figure 37 - Detail Power Terminal Dimensions

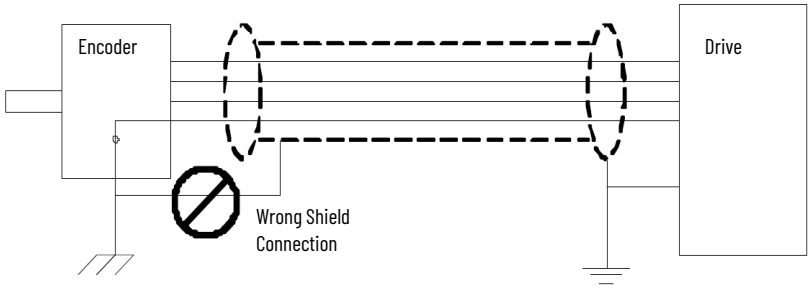

For more protection against electrical noise, specify an encoder with complementary outputs and connect with twisted-pair cable. With this type of cabling, the induced currents self-cancel.

As a final precaution, ground the shield together with all other parts of the system that require grounding to one ground. The one ground reduces varying ground potentials, caused by high current fluxes from motors, remote control switches, and magnetic fields.

Signal Distortion

The primary causes of signal distortion are cable length and capacitance. The longer the cable, the greater chance of signal distortion at the receiving end. The receiving end responds to either a logical '0' or a logical '1'. Anywhere between those values are undefined and the transition through this region is < 1.0 µs. If the leading edge of the waveform is distorted, it causes the transition time through this region to increase. At some point, the receiver can become unstable and either gain or lose encoder counts.

To reduce the effects of signal distortion at the encoder that is receiving electronics, consider these guidelines:

1. Use a low capacitance cable (< 120 pF/m [40 pF/ft]). For example, Belden 1529 A is an 18Awg 3pair cable having a capacitance of 114 pF/m (35 pF/ft).
2. Use twisted-pair cabling with a shield that covers 100% of the cable. This guideline is especially true in the case of quadrature encoders and for absolute encoders. Although, the data in absolute encoders do not exhibit the same frequency spectrum as quadrature encoders so you can use single wire cabling. In either case, always check with the encoder manufacturer for the recommended cable.

3. Keep cable distances as short as possible. Rockwell Automation recommends the following cable lengths:
   a. For the 20B-ENC encoders, maximum cable length is 65 m (200 ft). Longer cable distances could cause excessive surge currents. The operating frequency of the encoder has no bearing on this recommended distance due to the AC Termination. However, keeping the frequency so that the characteristic impedance of the cable is ~348 Ω, improves the surge currents. It can also increase the maximum distance to 100 m (330 ft).
   b. For the Universal Encoder Interface, maximum length is 200 m (650 ft) @ 100 KHz, or to 500 m (1600 ft) at frequencies below 55 KHz. Do not exceed this distance because the voltage drop across the cable can cause decreased power at the encoder.

Unused Inputs

Sometimes not all inputs are required in either the quadrature or absolute encoders. For example, the absolute encoder accepts a 12-bit encoder but also works with a lower resolution. Likewise, sometimes quadrature encoders do not use the Z track. Follow these guidelines for unused inputs:

1. 20B-ENC Board. Wire any unused input to the encoder power rail, including the B and B' inputs if a pulse encoder is used. Failure to do so results in phase loss warnings and improper operation of the encoder feedback logic, for example missing counts.
2. Universal Encode Interface. When used as a quadrature encoder interface, the same rule applies as for the 20B-ENC Board. When operating as an absolute encoder interface, the wiring of unused inputs depends on the position of the POL_QRDNT jumper. If the jumper is installed, wire all unused inputs to ENC PWR, otherwise use ENC COM.

Terminating the Customer Cables

Customer termination assemblies can accommodate either top, or bottom, customer cable entry. For clarity, Figure 38 and Figure 39 show only one phase of three; there are a total of nine lug pads.

Figure 38 - Typical Line Cable Termination (assembled for bottom cable entry – 18-pulse)

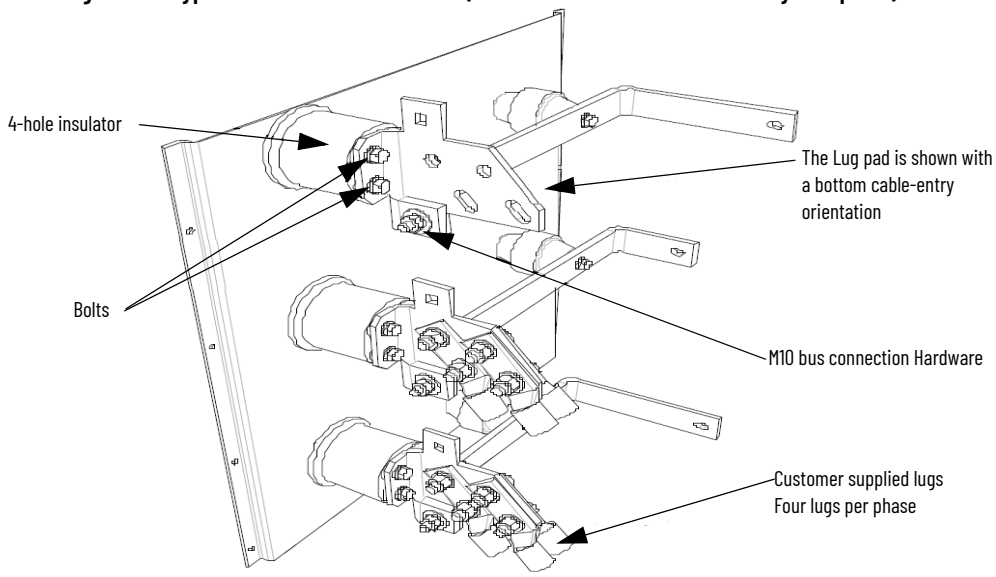

For top-line cable entry, remove the lug pads and reorient them as shown in Figure 39. To remove the lug pads, disconnect the M10 bus connection hardware (17 mm hex tooling required). Remove the two bolts that secure the lug pad to the 4-hole insulator. See see Torque Requirements on page 95 for more information regarding these electrical connections.

Figure 39 - Line Cable Terminal Assembly (modified for top cable entry – 18-pulse)

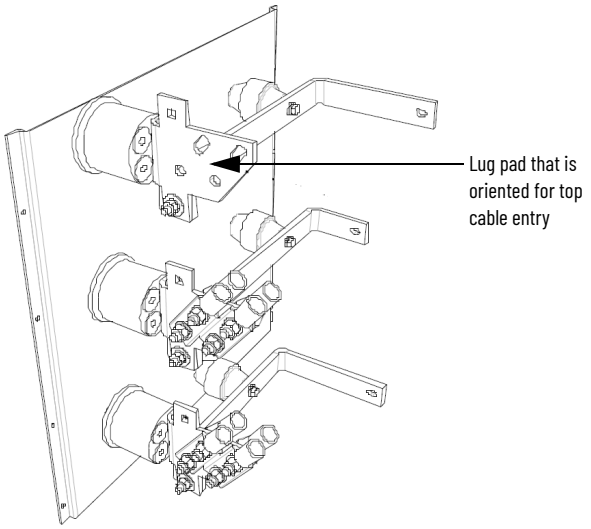

Grounding Practices

Grounding:

- Increases personnel safety.
- Limits dangerous voltages on exposed parts regarding ground.
- Facilitates proper over-current device operation under ground fault conditions.
- Provides electrical interference suppression.

Generally, all external equipment grounding must meet the Canadian Electrical Code (CEC) C22.1, or the NEC NFPA 70, and applicable local codes.

See these diagrams for ground connections. Do not connect the main ground bus of the drive to the system ground. This ground bus is the common ground point for all grounds internal to the drive.

Figure 40 - Ground Connection Diagram with Isolation Transformer

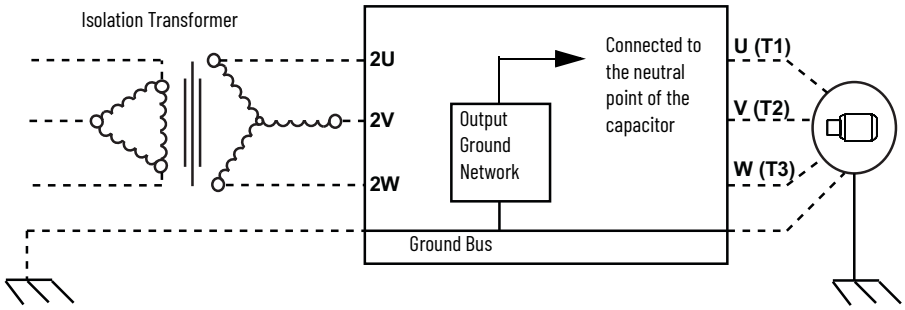

Figure 41 - Ground Connection Diagram with Line Reactor

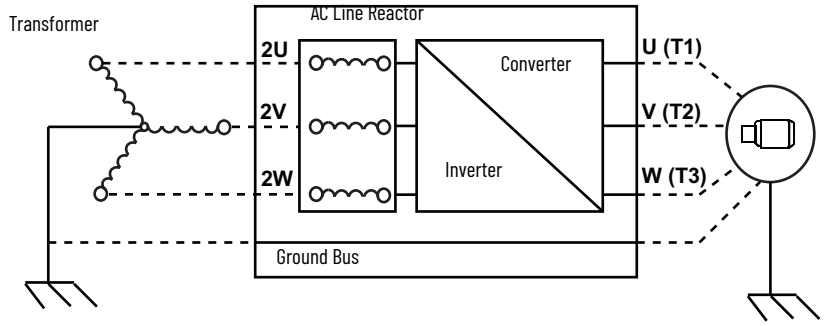

Provide each power feeder from the substation transformer to the drive with properly sized ground cables. Using conduit or cable armor as a ground on its own is insufficient.

IMPORTANT	If a drive isolation transformer is used, do not ground the WYE secondary neutral point.

Bond each AC motor frame to the buildings steel that is grounded and within 6 m (20 ft) of its location. Tie it to the ground bus of the drive via ground wires within the power cables or conduit. The conduit or cable armor must bond to ground at both ends.

Guidelines for Drive Signal and Safety Grounds

When using interface cables that carry signals (where the frequency does not exceed 1 MHz) for communications with the drive, follow these general guidelines:

- Ground screen mesh around the entire circumference, rather than forming a pigtail grounded only at one point.
- For coaxial cables with one conductor that is surrounded by a mesh screen, ground the screen at both ends.
- When using a multi-layer screened cable (that is, a cable with both a mesh screen and a metal sheath or some form of foil), there are two alternative methods:
  - Ground the mesh screen at both ends to the metal sheath or foil (known as the drain). The sheath must (unless otherwise specified) be grounded at one end only. The end is at the receiver end or the end that is physically closest to the main equipment ground bus.
  - Leave the metal sheath or foil insulated from ground, and ground the other conductors and the mesh cable screen at one end only.

Specifications for Customers and Power Integrators

Attach an external ground to the main ground bus, in compliance with applicable local codes and standards. As general guidelines, the ground path must be of sufficiently low impedance and capacity that:

- The rise in potential of the drive ground point when subjected to a current of twice the rating of the supply must be no higher than 4V over ground potential.

- The current flowing into a ground fault is of sufficient magnitude to cause the protection to operate.

Run the main grounding conductor separately from power and signal wiring so that faults do not:

- Damage the grounding circuit.
- Interfere with or damage, protection and metering systems, or cause undue disturbance on power lines.

Electrical Supplies: Grounded and Ungrounded Systems

The cable insulation rating of an ungrounded, three-phase electrical supply system, must handle both the phase-to-phase voltage and the voltage-to-ground. This requirement is in case one of the other phases develops a ground fault.

The cable insulation must be rated for continuous voltage of root three (1.732) times (1.1) times the rated voltage of the supply (1.732 x 1.1 = 1.9) times the rated line-to-line voltage).

Ground Bus

The drive ground bus runs along the top each of the drive enclosures at the front. The ground bus is accessible when the enclosure door is open and the low voltage compartment is hinged out (in the case of the incomer cabinet). Make sure the drive that is grounded, typically at the point on the ground bus in the incomer cabinet, is close to the incoming power terminations.

Interlocking

For safety reasons, access is restricted to the medium voltage areas of the drive by the use of key interlocking.

At installation, configure the key interlocking to enable access to the medium voltage compartments only when the upstream power is locked in the OFF position.

The key interlocking prohibits applying the upstream power until the access doors of the medium voltage drive are closed and locked.

The key interlocking must be properly installed to the upstream equipment.

Notes:

Pre-Commissioning

Rockwell Automation® manages the start-up service for each installed drive at the customer site. There are a number of tasks that must be completed before Rockwell Automation personnel are scheduled for drive commissioning.

This chapter outlines the required pre-commissioning responsibilities. Review this information before commissioning the drive as a reference for drive lineup commissioning. Record the information in the data sheets provided; these sheets are useful during future procedures for maintenance and troubleshooting.

ATTENTION: Perform the pre-commissioning tasks in the order that is listed in this chapter. Failure to do so can result in equipment failure or personal injury.

IMPORTANT Rockwell Automation requests a minimum of four weeks notice to schedule each startup.

The Rockwell Automation standard work hours are 9:00 a.m-5:00 p.m. EST (8 hours per day) Monday through Friday, not including observed holidays. Additional work hours are available on a time and material basis.

Inspection and Verification

Before the drive can be commissioned, Rockwell Automation recommends:

1. A meeting with Rockwell Automation personnel before installation to review the following.
   a. Start-up plan
   b. Start-up schedule
   c. Drive installation requirements
2. Inspecting the mechanical and electrical devices of the drive.
3. Performance of a tug test on all internal connections within the drive and verification of the wiring.
4. Verifying critical mechanical connections for proper torque requirements.
5. Verifying and adjusting mechanical interlocks for permanent location.
6. Confirmation of all inter-sectional wiring connections.
7. Verifying the control wiring from any external control devices, such as PLCs.
8. Confirmation of the proper operation of the cooling system.
9. Verification of the proper phasing from isolation transformer to drive.
10. Confirming the cabling of the drive to motor, isolation transformer, and line feed.

11. Confirmation of the test reports that indicate the insulation resistance (IR) and high-potential tests are complete on line and motor cables.
12. Control power checks to verify all system inputs such as starts/stops, faults, and other remote inputs.
13. The application of medium voltage to the drive and performance of operational checks.
14. Bump motor and tune drive to the system attributes. If the load is unable to handle any movement in the reverse direction, uncouple the load before bumping the motor for a directional test.
15. The drive motor system is run throughout the operational range to verify proper performance.

IMPORTANT Customer personnel must be on-site to participate in the system start-up procedures.

ATTENTION: The servicing of energized industrial control equipment can be hazardous. Severe injury or death can result from electrical shock, burn, or unintended actuation of control equipment. Hazardous voltages can exist in the cabinet even with the circuit breaker in the OFF position. Rockwell Automation recommends that control equipment is disconnected or locked out from power sources, and that discharge of stored energy in capacitors is confirmed. If it is necessary to work in the vicinity of energized equipment, follow the safety-related work practices of NFPA 70E, Electrical Safety Requirements for Employee Work Places.

Notwithstanding the safety references in this document, follow all local codes and safety practices when working on this product.

ATTENTION: The CMOS devices that are used on the control circuit boards are susceptible to damage or destruction by static charges. Personnel who work near static sensitive devices must be appropriately grounded.

Pre-Commissioning Responsibilities

To avoid complications during the commissioning process, verify that the drive lineup is ready for commissioning. This chapter has the pre-commissioning checklist on page 67. To verify that all points are completed in the proper sequence, use the checklist before the process for commissioning the drive is started. Print and complete the checklist so that the start-up proceeds efficiently.

Pre-Commissioning Using the Checklist

1. Print a copy of the pre-commissioning checklist on page 67.
2. Initial each task and provide the date as each task is completed.
3. When the checklist is complete, photocopy the checklist and fax the copy to Medium Voltage Support, along with the planned start-up date.
4. Upon receiving this checklist, the Medium Voltage Support contacts the site to finalize arrangements for a start-up engineer to travel to the site at your convenience.

Additional Required Resources

Before scheduling your drive commission, verify that you have the following:

- Self-powered gate driver board-test power cable wire-harness (SPGDB) (Part no. 80018-298-51) supplied with SCR rectifier drives only
- Rockwell Automation electrical and mechanical diagrams for each drive
- PLC program (if supplied with a PLC)
- Commissioning Data Sheets
- All required manuals (see The Pre-commissioning Checklist for the list)

If any of the previously mentioned information is unavailable before the time of commissioning, contact Rockwell Automation.

The Pre-commissioning Checklist

Medium Voltage Support	Name:	Date:
Rockwell Automation	Company:	
Fax: 1 (866) 465 0103 or Fax: 1 (519) 740 4756	Phone:	Pages:
	Fax:	

Drive Serial Number:	
CSM Service Engineer Requested (YES/NO):	
Scheduled Commissioning Date:	

Table 5 - Receiving and Unpacking

Initials	Date	Check	
			The drives are checked for shipment damage upon receiving.
			After unpacking, the items that are received are verified against the bill of materials.
			Any claims for breakage or damage, whether concealed or obvious, are made to the carrier by the customer as soon as possible after receipt of shipment.
			All packing material, wedges, or braces are removed from the drive.

Table 6 - Installation and Mounting

Initials	Date	Check	
			The drive is securely fastened in an upright position, on a level surface. Seismic zones require special fastenings. Consult factory.
			The lifting angles are removed.
			Bolts are inserted into original location on top of drive (helps prevent leakage of air for cooling).
			All contactors and relays are operated manually to verify free movement.

Table 7 - Safety

Initials	Date	Check	
			All mechanical interlocks and door Ram Interlocks are tested for proper functionality and are not defeated or damaged.
			All Kirk key interlocks are installed and tested for proper functionality.
			The grounding of the drive must be in accordance with CEC, NEC, or IEC regulations.
			If the drive has an isolation transformer, the transformer enclosure or frame must be bonded to system ground at a minimum of two locations.
			If the drive has an isolation transformer, the wye secondary neutral-point must not be grounded.
			If there are shipping splits in the lineup, the ground bus between cabinets is installed.
			Based on your local regulation, an ARC Flash study is complete.

Table 8 - Control Wiring

Initials	Date	Check	
			All low voltage wiring entering the drive is labeled, the appropriate wiring diagrams are available, and all customer interconnections are complete.
			If an encoder is used, the encoder must be isolated from the motor frame. The encoder cables must be routed in grounded steel conduit for electrical noise suppression. The conduit must be grounded at junction box but left isolated from the encoder with an insulated bushing.
			The encoder cable shield to the drive is connected to the ground bus at the drive end only.
			All AC and DC circuits are run in separate conduits.
			All wire sizes that are used are selected by observing all applicable safety and CEC / NEC / IEC regulations.
			Remote I/O Interface is properly configured / active.
			All 3-phase control wiring is within specified levels and is verified for proper rotation, UVW.
			All single-phase control wiring is within specified levels and has grounded neutrals.

Table 9 - Drive Lineup Status

Initials	Date	Check	
			The medium voltage and low voltage power is available for startup activities.
			The motor is uncoupled from the driven load.
			The load is available for full load testing.

Table 10 - Power Wiring

Initials	Date	Check	
			The power cable connections to the drive, motor, and isolation transformer adhere to CEC, NEC, IEC, or appropriate local standards.
			The cable terminations, if stress cones are used, adhere to the appropriate standards.
			Appropriate cable insulation levels are adhered to, as per Rockwell Automation specifications (see Cable Insulation on page 26).
			All shields for shielded cables must be grounded at the source end only.
			If shielded cables are spliced, the shield must remain continuous and insulated from ground.
			All wire sizes that are used are selected by observing all applicable safety and CEC / NEC / IEC regulations.
			All power connections are torqued as per Rockwell Automation specifications. See Torque Requirements on page 95.
			All customer power cabling is insulation resistance or high potential tested before connecting to drive system.
			Power wiring phase-rotation is verified per the specific Electrical Schematics and drawings that are supplied by Rockwell Automation.

Notes:

ArcShield Unit Information

Overview

This manual covers all drives; however, only the 7000B units have the ArcShield™ protection option. The arc-resistant (ArcShield) enclosure is an option for the "B" Frame PowerFlex® 7000. This option cannot be retrofitted in the field. ArcShield units have a robust arc resistant enclosure design that has been tested per IEEE C37.20.7. The arc resistant drive was tested to withstand the effects of an arc flash at 50 kA for 0.5 seconds with current limiting fuses. ArcShield units provide an enhanced Type 2B Accessibility level.

ArcShield Design

ArcShield units typically include a pressure relief vent on the roof of the structure (some incoming units are without a pressure relief vent if top cable entry is required). Under arc flash conditions, the pressure relief vent opens to allow hazardous flames and gases to exit the enclosure via plenum or chimney system. The low voltage panel area is sealed to prevent flames and gases from entering. Regardless, suitable personal protective equipment (PPE) must be used whenever working on live circuits.

ATTENTION: To keep Arc resistant integrity, these rules must be followed:

- The pressure relief vent must not be tampered with. Do not use the pressure relief vent as a step.
- No alterations can be made to the ArcShield structure.
- All covers, plates, and hardware that are removed for installation or maintenance purposes must be reinstalled and properly secured. Failure to do so voids the arc resistant integrity.
- Treat power cable entry points as the boundary to a hazardous location and sealed accordingly. Failure to do so voids the arc resistant integrity.
- A plenum or chimney must be used to direct the arc flash energy to a suitable location. Failure to do so voids the arc resistant integrity.
- All wiring between the low voltage panel and the power cell must be routed through a suitable gland. This routing is to make sure that flames and gases are not transmitted into this area (as fitted from factory).

Exhaust Systems: Chimney or Plenum Option

Plenum Information

A plenum can be provided for each unit. The plenum is then field-mounted on the top of the unit structure. Some incoming units do not have a plenum if it requires a top cable entry. The purpose of the plenum is to direct the hazardous flames and gases away from the top of the arc resistant enclosure. Unit plenums are secured to the top of the unit structure and to adjacent plenums. The continuous conduit that is created can direct the arc flash energy away from personnel. See ArcShield Plenum Installation Instructions on page 77.

Each plenum-based ArcShield lineup includes a plenum exhaust piece that extends beyond the left end of the lineup. The other end of the plenums are capped with an end cover. Extensions can be added to the plenum to direct the arc flash energy to an area further away, where plasma gases can be safely vented.

Figure 42 - Elements of ArcShield Plenum

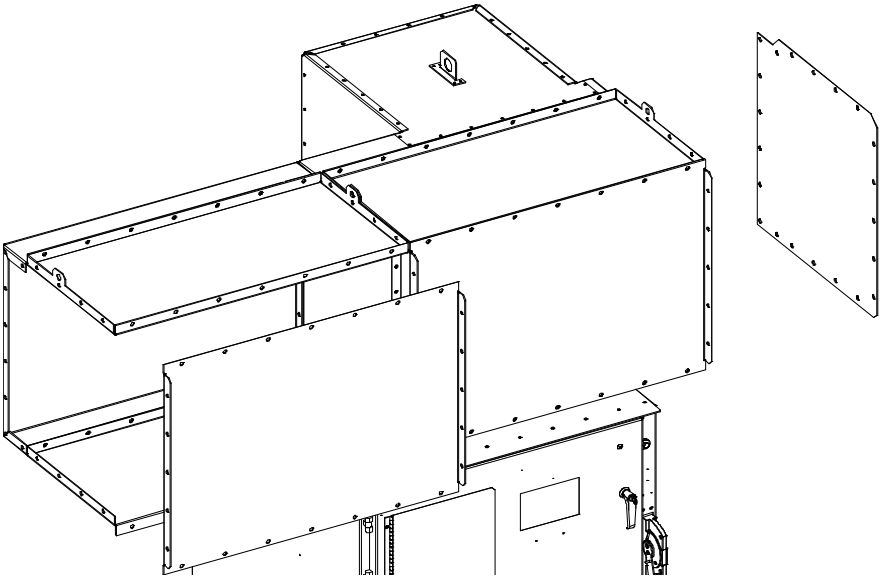

Figure 43 - Cross-section of Plenum Extension, Dimensions in mm [inches]

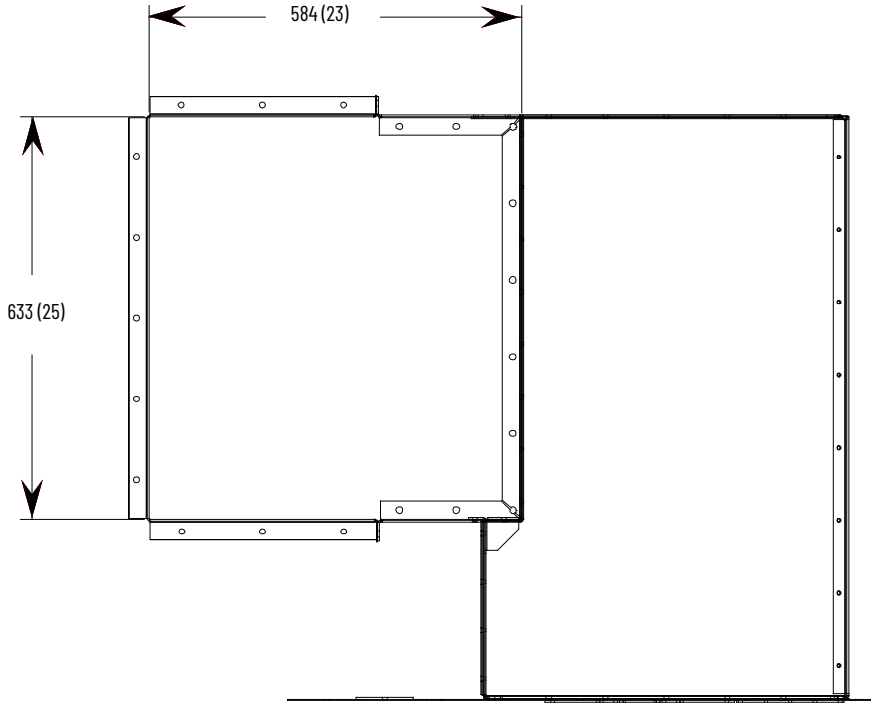

Plenum Exhaust Considerations

The following options for locating the plenum exhaust are presented:

1. Plenum ducted to an area of the control room where arc gases are permitted to escape, with plenum extensions (see Figure 44, Figure 45, and Figure 46).
2. Plenum duct to outside of control room (see Figure 44 and Figure 45).

Plan the location where the plenum exhausts. Make sure that:

- There is no access to personnel while equipment is energized.
- Area is free of flammable material or vapors.

Make sure that adequate space is provided around the plenum exhaust, as outlined in Figure 44 through Figure 46.

IMPORTANT	Damage or destruction can occur to equipment in the area of the plenum exhaust point.

Figure 44 - Plenum Exit Left with Extensions to Internal Controlled Access Area (Top View)

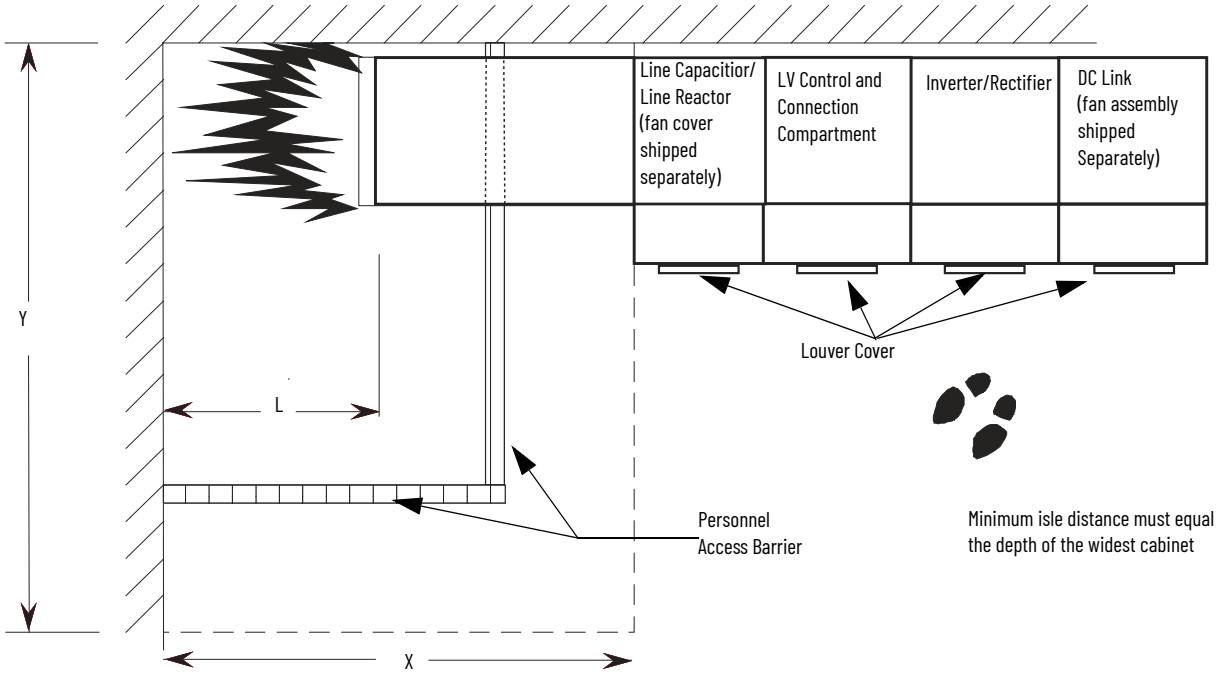

Figure 45 - Plenum Exit Left with Extension to Internal Controlled Access Area (Front View)

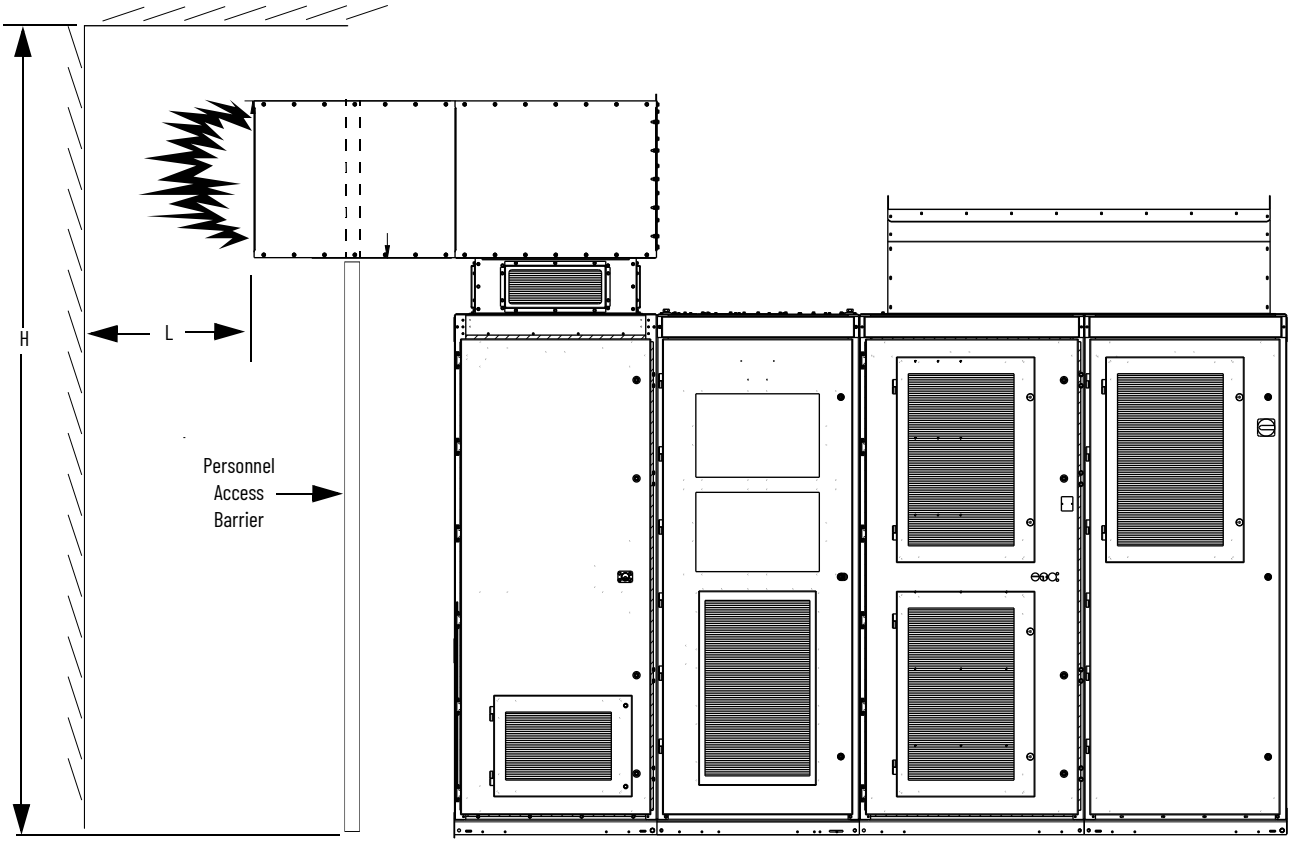

Minimum H = 3.5 m (138 in.)
Minimum L = 1.2 m (47 in.)

Minimum Volume of space that is required for safe pressure relief: X * Y * H = 11 m^3 (390 cubic feet)

Figure 46 - Chimney Exhaust Space Requirements

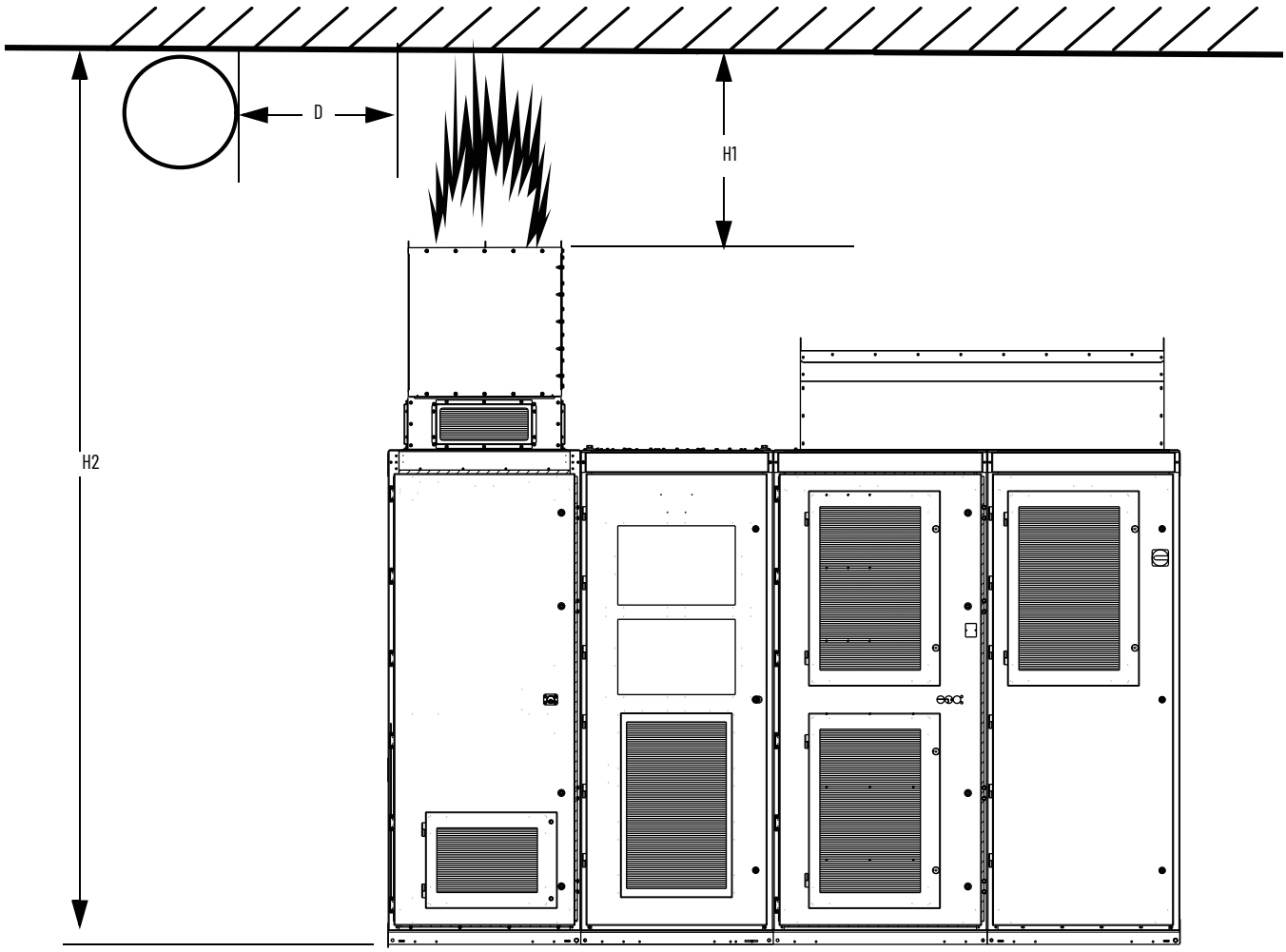

Minimum H1: 0.4 m (16 in.)
Minimum D (distance): 1 m (39 in.)
Minimum H2: 3.494 m (137.54 in.)

Additional Notes

- Any painted surfaces, which face direct contact with the arc products, can ignite. Flame suppression is recommended.
- The exit point can also be outside the building. Make sure that ice, snow, or vermin nest cannot block the exit area.
- Access barriers are recommended to restrict access by personnel while the equipment is energized. A chain link fence is a suitable barrier material.

Chimney Information

Where adequate clearance height (space) is available, chimney can be provided for each unit in place of the plenum system. Field-mount the chimney on top of the unit structure. The purpose of the chimney is to direct the hazardous flames and gases away from the top of the resistant enclosure. The chimney is secured to the top of each unit structure. See ArcShield Plenum Installation Instructions on page 77 for chimney installation instructions.

Chimney Exhaust Considerations

1. For the medium voltage motor-control center, there must be a minimum distance of 1.7 m (67 in.) from the top outlet of the chimney to the ceiling. And a minimum of 1 m (39 in.) on each side.
2. No obstructions (for example, Piping) can be in the path of the exhaust within this 1.7 m (67 in.) height requirement.

Plan the location where the chimney exhausts. Make sure that:

- There is no access to personnel while equipment is energized.
- Area is free of flammable material or vapors.
- Make sure that adequate space is provided around the chimney exhaust as outlined in Figure 46.

Figure 47 - Arc Shield Lineup Dimensions

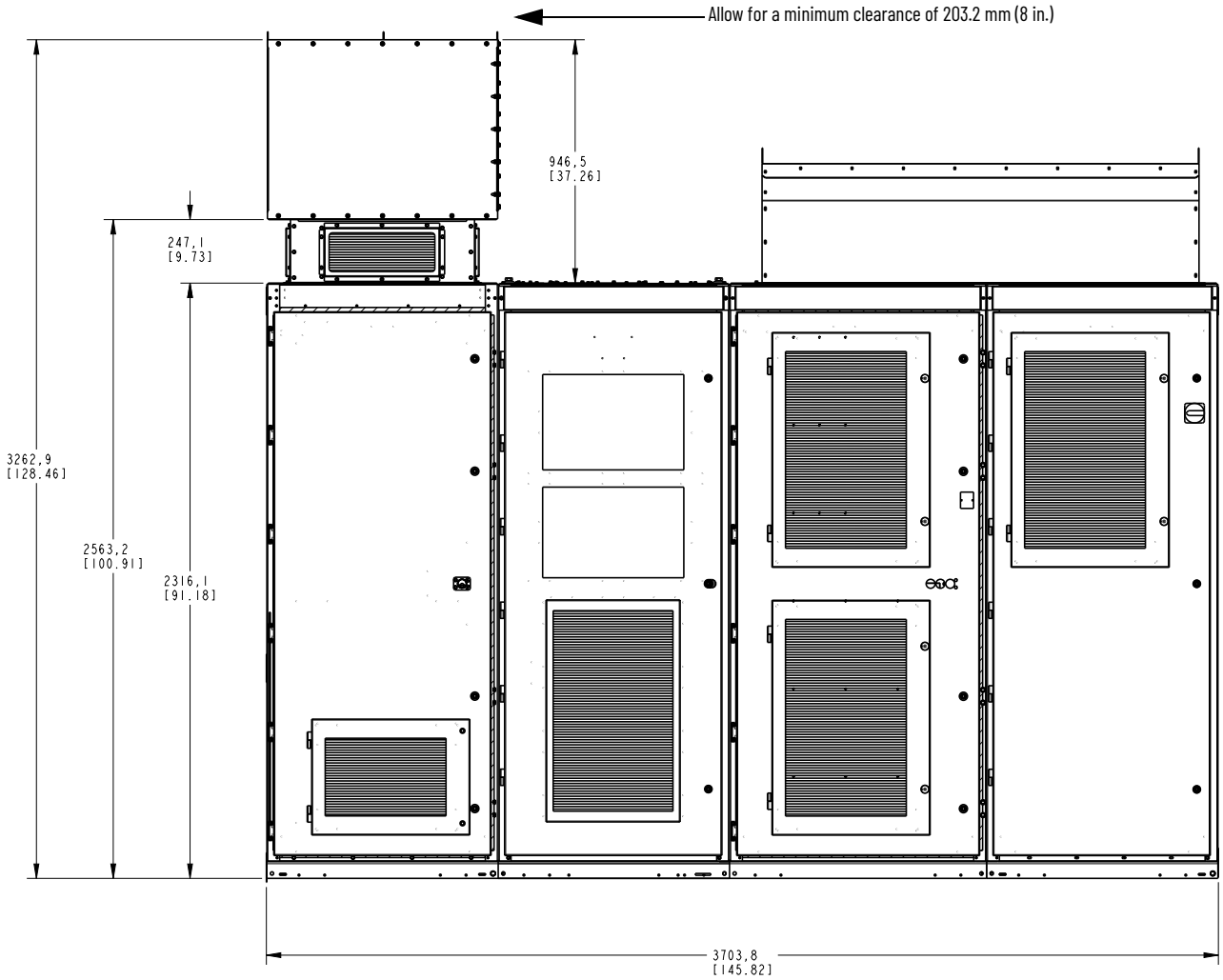

ArcShield Plenum Installation Instructions

The following instructions are provided to make sure that the proper installation and function of plenum components that are supplied with ArcShield enclosures. See ArcShield Design on page 71 for additional information that is related to ArcShield plenums before attempting to follow these instructions.

Plenum Bracing

The bracing of the plenum must be able to withstand the dynamic forces of the arc fault and any other vibration or seismic effects that are associated with the installation. Most of this force is in the direction opposite to where the relief vent exits. The amount of the bracing depends on how the plenum is supported at its exit and the distance from the end of the cabinets to the exit vent.

- A flange is available for the installation of hangers to support the plenum weight.
- The plenum extension has holes for mechanical support.
- Weight per unit length of Rockwell supplied plenum = 28 kg/m (19 lb/ft).
- Installer is responsible for ensuring that the plenum extension has sufficient support to resist the effect of vibrations and seismic effects.

IMPORTANT Plan the location where the plenum exhausts. See ArcShield Design on page 71). Equipment in the area of the plenum exhaust point can be damaged or destroyed. Mark the plenum exhaust area as a Hazardous Zone (Figure 48).

Figure 48 - Plenum Exhaust Label

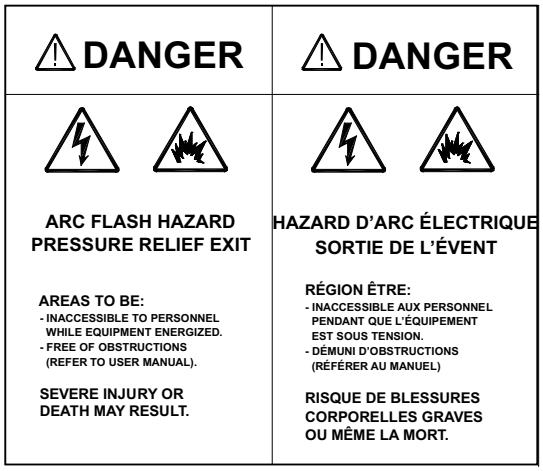

Figure 49 - Various Plenum Components Available

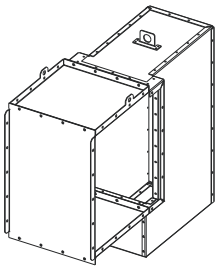

18" wide Plenum
Fastened directly over the 0.5 m (18 in.) wide cabinet

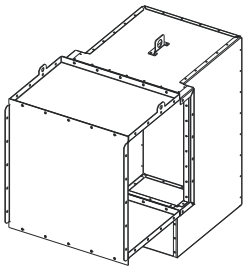

26" wide Plenum
Fastened directly over the 0.7 m (26 in.) wide cabinet

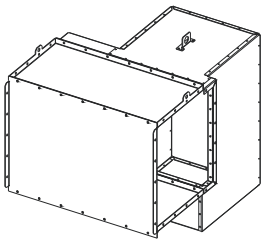

36" wide Plenum
Fastened directly over the 0.9 m (36 in.) wide cabinet

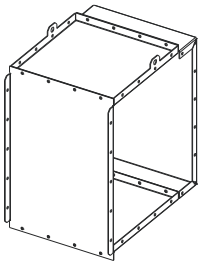

18" long Extension
Connected to the last Plenum on the exhaust end of the "lineup"

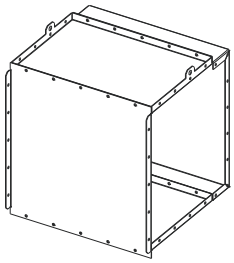

26" long Extension
Connected to the last plenum on the exhaust end of the "lineup"

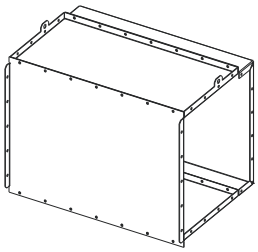

36" long Extension
Connected to the last plenum on the exhaust end of the "lineup"

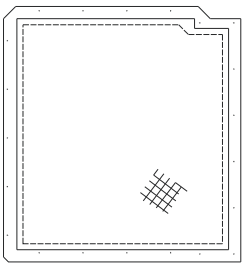

Screen Cover Plate
Fastened at the opening of the last component on the exhaust end

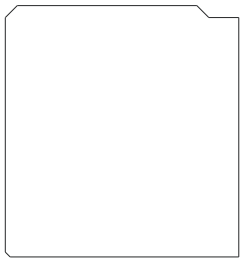

End Cover Plate
Fastened at the opening of the last PlOenum in the "lineup" opposite the exhaust end to seal plenum end

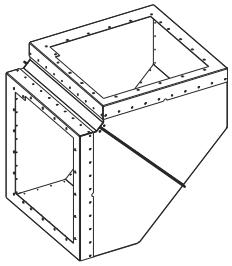

90° Elbow Section
Connected at the exhaust end of the plenum (or Extension)

General Plenum Layout for ArcShield Lineup

An example of a general plenum assembly configuration is shown in Figure 50. Plenums of various widths are mounted directly over the MV enclosures of the corresponding width. A 0.9 m (36 in.) Exhaust extension assembly is shown mounted on the extreme right side plenum of the equipment "Lineup" (can alternatively exhaust to the left). Engineered systems can be made site specific.

Figure 50 - ArcShield Lineup (Left -hand Exhaust)

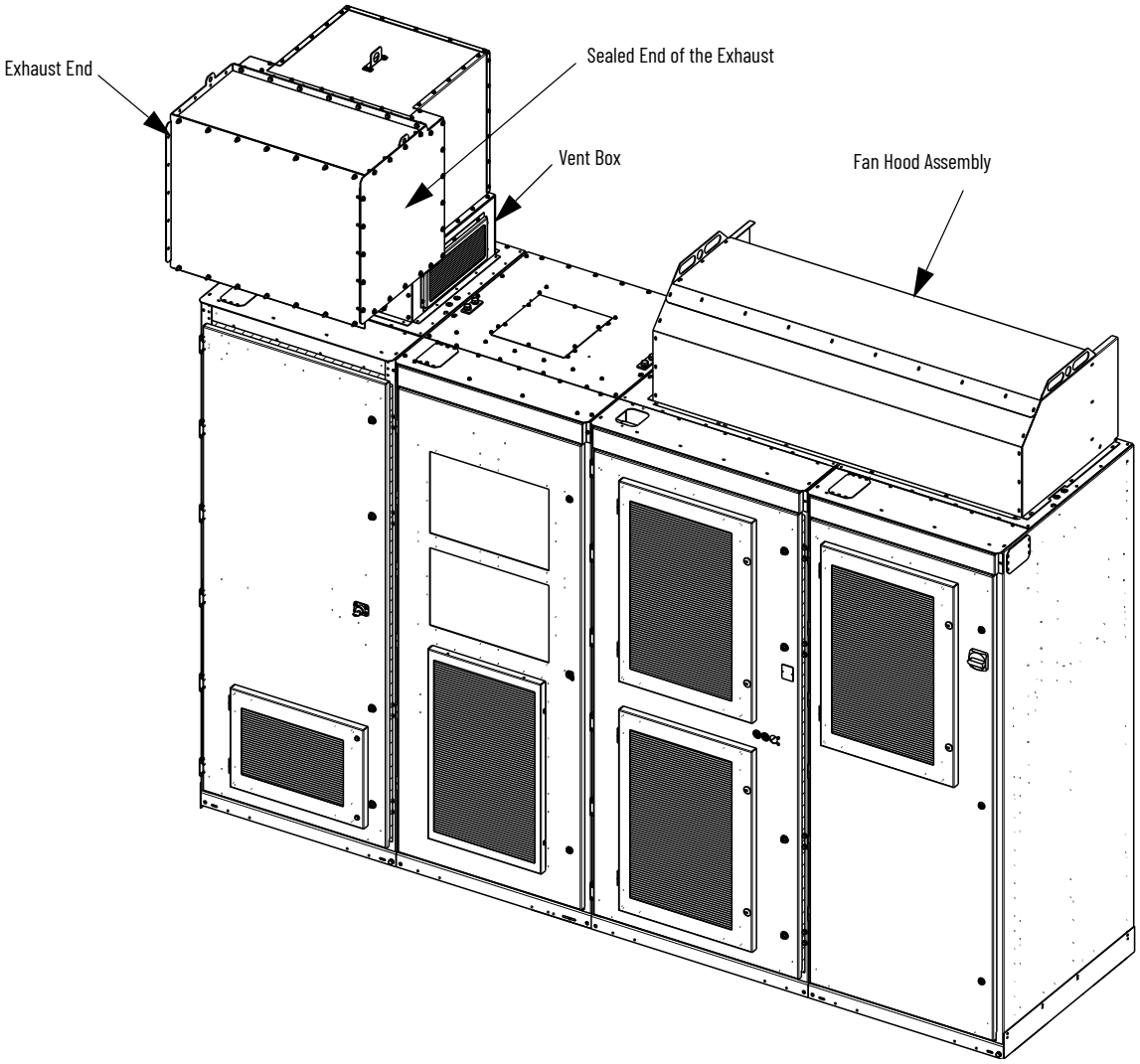

Figure 51 - Arc Shield Line up with Starter and Left Plenum Exhaust

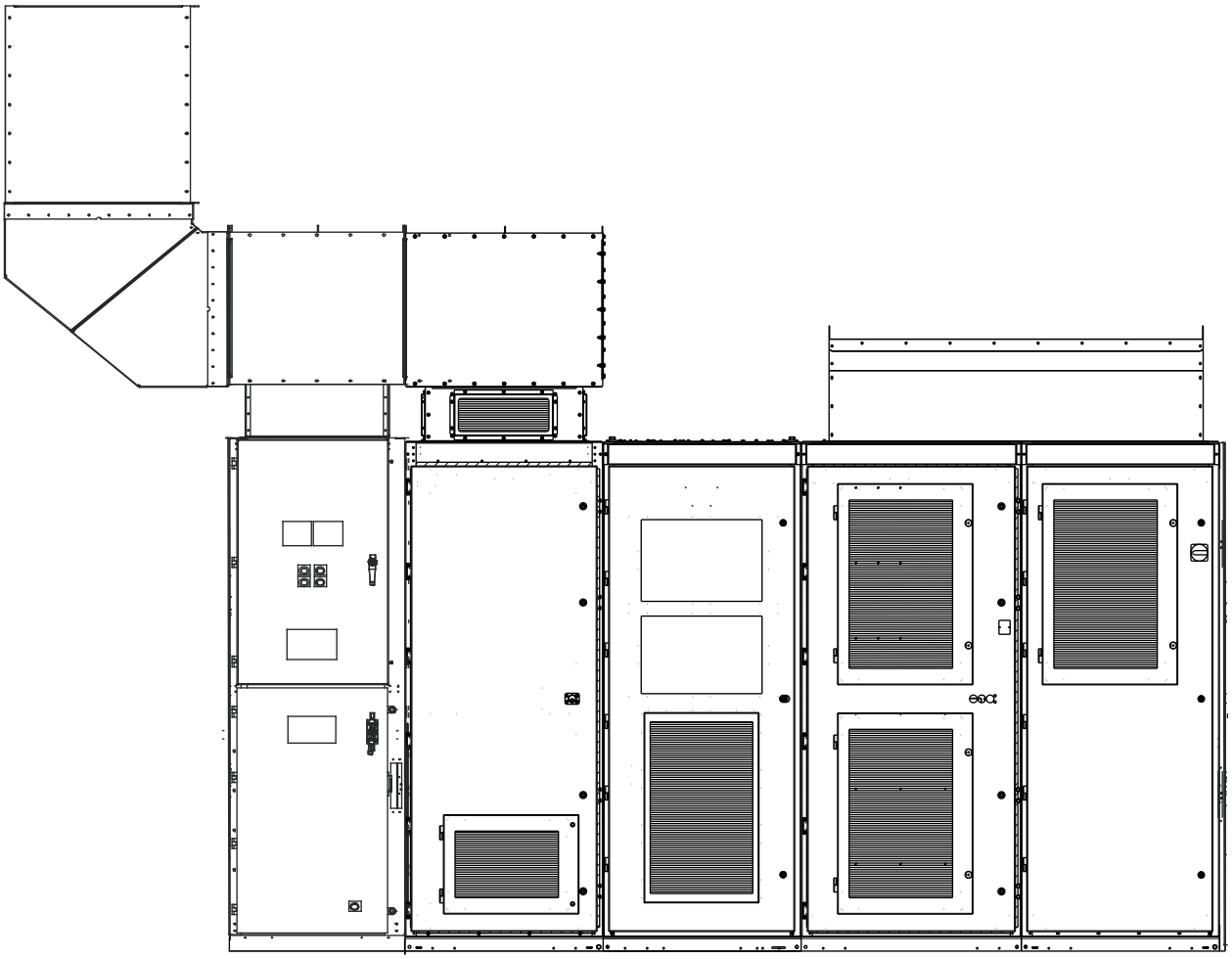

Plenum exhaust is on the left end of the lineup. Pictures and figures in this procedure are shown with a left-hand exhaust exit direction.

Figure 50 shows an example of a left-hand exhaust.

Also shown is an optional vertical (top) direction exhaust extension (see Figure 61).

IMPORTANT	Plenum components that are not directly mounted to the tops of the MV enclosures, must have additional mounting support. This restriction includes the Extension components and 90° Elbow Sections (refer to STEP 5 – Additional Mounting Support on page 86).

For dimensional requirements of the Arc Shield lineup, see Arc Shield Lineup Dimensions on page 76.

STEP 1 - Mounting a Single Plenum

Before mounting a plenum over an MV enclosure, the front duct section must first be removed, as shown in Figure 52.

Figure 52 - Remove the Front Duct Section

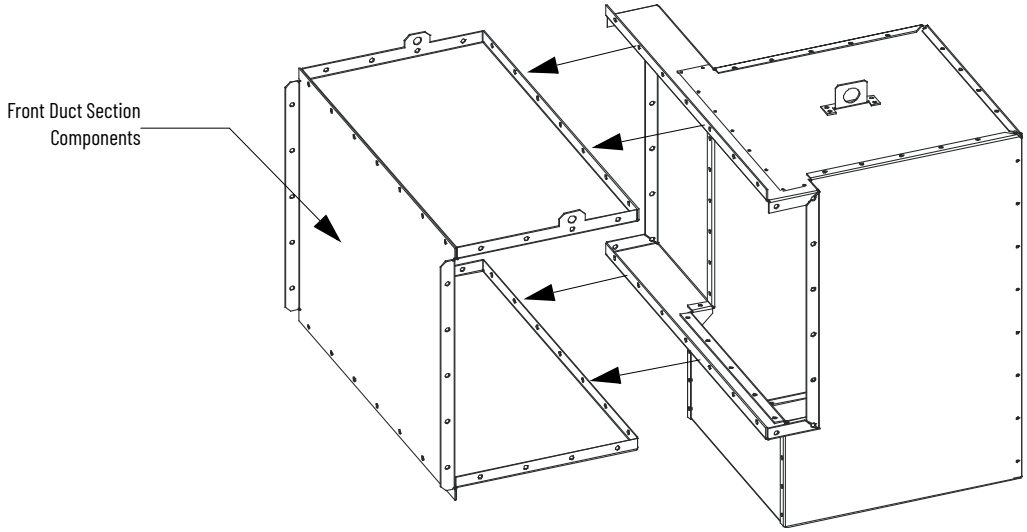

Cabinet Preparation

In preparation for mounting plenum, the cabinet lifting means (the lifting angles) must be removed. The bolts retaining the lifting means must be replaced in the holes from where they came. Failure to reinstall removes the cabinets ability to control any arc gases properly. Once the lifting angles or clips are removed, remove 1/4-20 fasteners from the Relief vent on the top of the MV enclosure.

ATTENTION: Hardware that is used to retain the lifting provision hardware must be reinstalled in the same holes. Failure to replace this hardware makes the arc resistance of the cabinet ineffective and could subject personnel to the possibility of severe burns, injury, or death.

IMPORTANT Do not remove the four corner fasteners (Figure 54).

Figure 53 - Typical Relief Vent Fasteners (Top View)

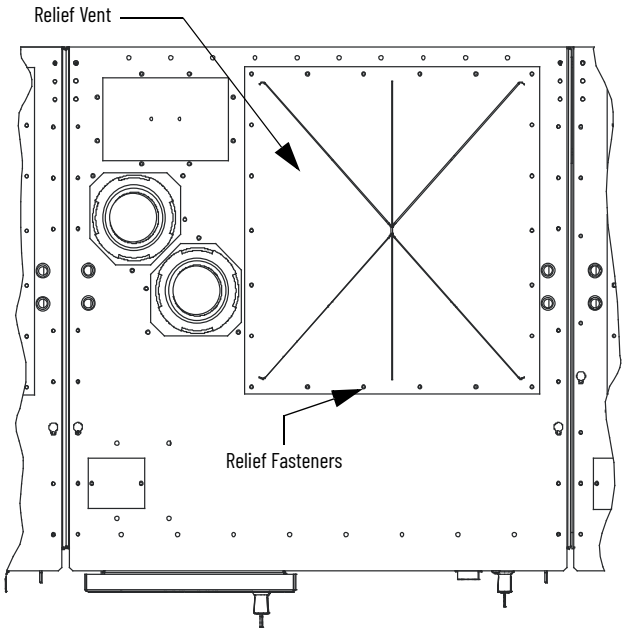

Figure 54 - Relief Vent

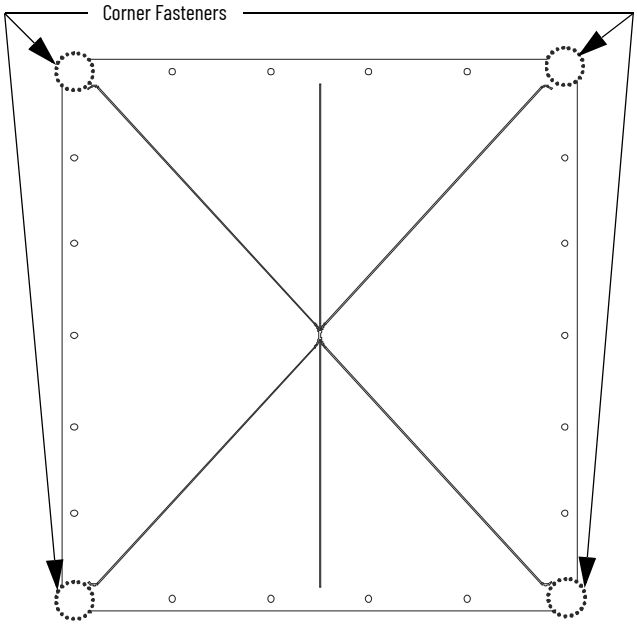

The plenums are designed to fit over the fastener heads at the four corners of the Relief vent. The corner fasteners are required to secure the Relief vent during installation.

Plenum Placement on Structure

Lift the plenum in place directly over the relief vent (shown in Figure 55). Attach the plenum to the top of the enclosure. Use all 1/4-20 fasteners that are removed in the Cabinet Preparation procedure. Use hand tools only.

Figure 55 - Plenum Placement

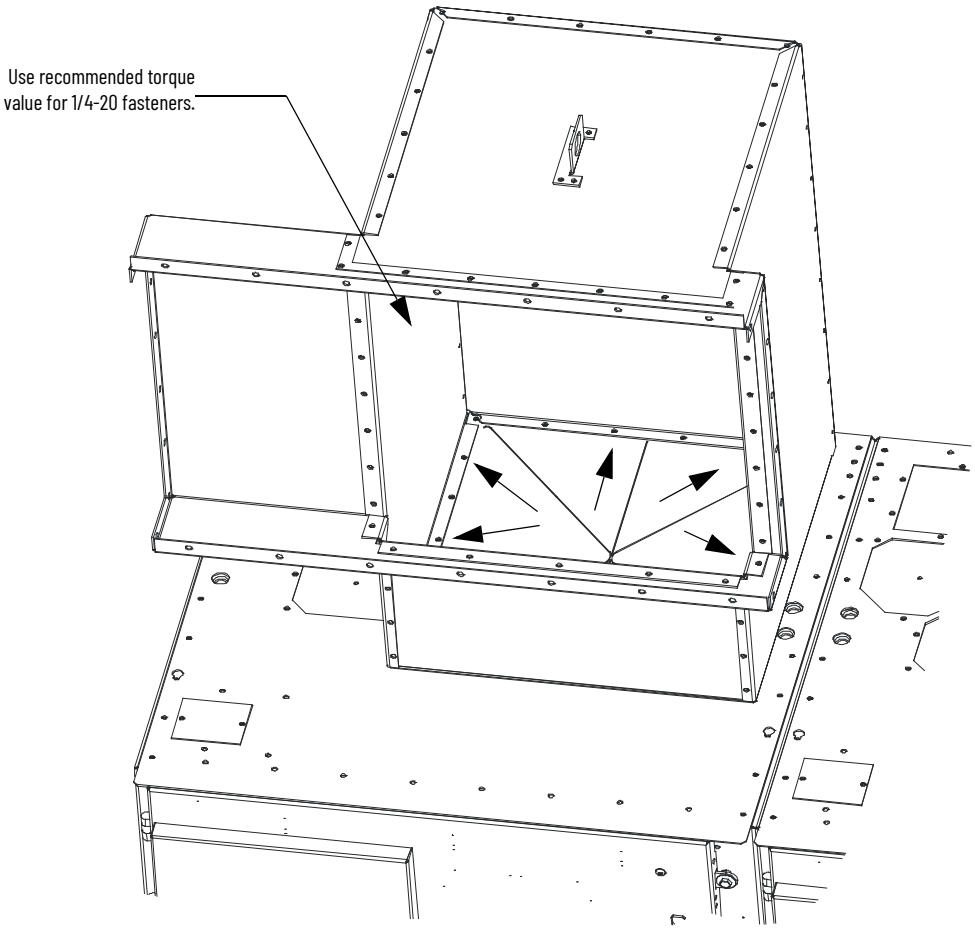

IMPORTANT	Any unused holes must be filled with thread forming screws. For example, the lifting lug holes must be filled after the lugs are removed.

STEP 2 – Closing the Front of the Plenum Sections

All plenums in a lineup must be mounted to the top of each enclosure. And to the plenum directly beside it before the front duct sections are reattached (see Figure 52).

Mount the "End Cover Plate" on the closed end of the lineup by using 5/16 inch hardware (see Figure 56 left side).

After the first stage of the plenum assemblies have been mounted, the plenums can then be "closed-up" by replacing the front duct sections as shown in Figure 56.

Figure 56 - Plenum Sections

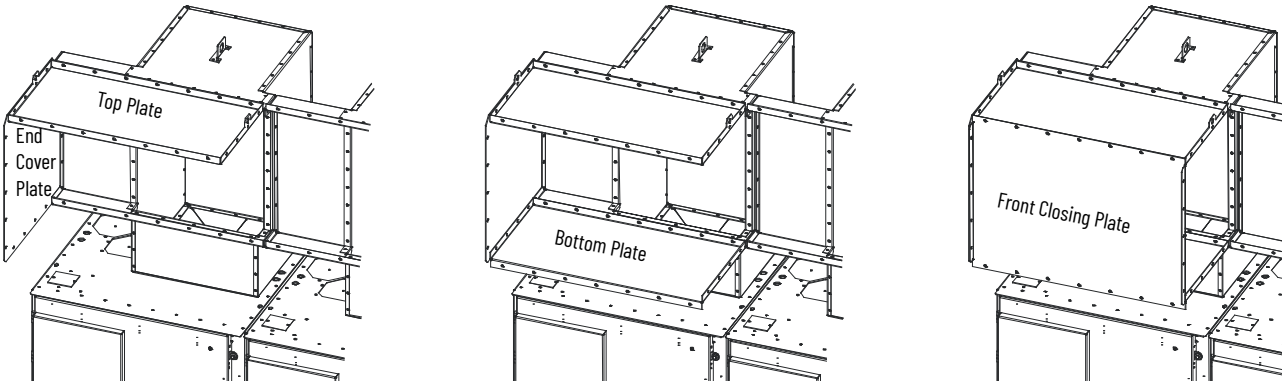

IMPORTANT Do not reinstall the front duct section of the last plenum on the exhaust side of the lineup. See STEP 4– Mounting Extension/ Elbow to Plenum Lineup on page 85 for more information.

STEP 3 – Extension and Elbow Assembly

Attach the 36" Extension components and 90° Elbow Section using 5/16-inch hardware in the following sequence:

Step 5A – See Figure 57

Step 5B – See Figure 58

Step 5C – See Figure 59

The Screen Cover Plate is attached in Figure 58.

Figure 57 - 90° Elbow Section Assembly, Step 5A (Front View)

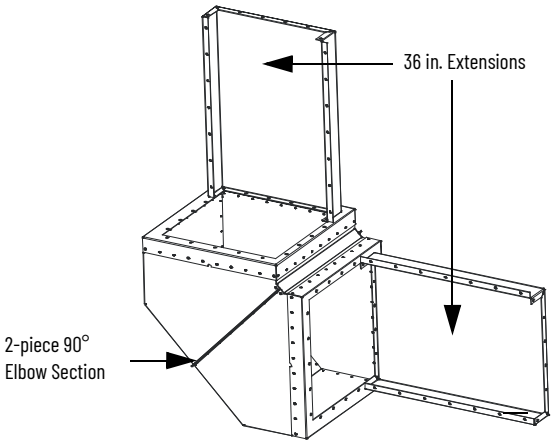

Figure 58 - 90° Elbow Section Assembly, Step 5B (Front View)

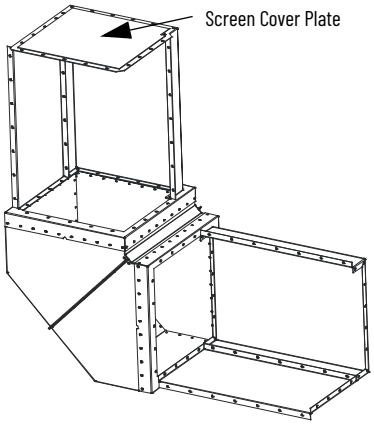

Figure 59 - 90° Elbow Section Assembly, Step 5C (Front View)

The Extension components are attached to the Elbow Section using 5/16-in. Hardware.

Figure 59 illustrates what the Extension/Elbow Assembly resembles when finished.

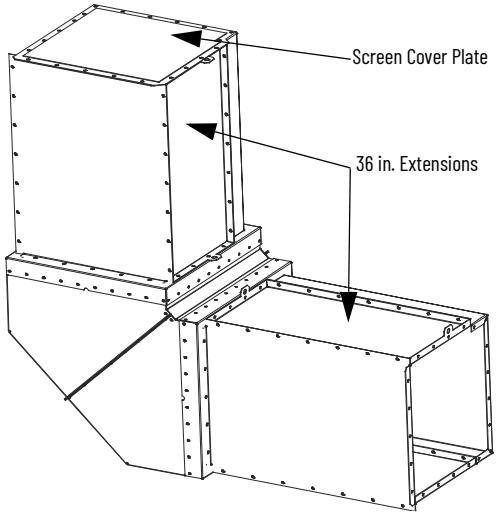

STEP 4– Mounting Extension/Elbow to Plenum Lineup

In STEP 2 – Closing the Front of the Plenum Sections on page 83, the last plenum at the exhaust side of the lineup has the front duct section removed. The removed section allows access to fastener holes to mount the extension/elbow components (see Figure 60).

Figure 60 - Optional Extension/Elbow with Vertical Extension (left side exit)

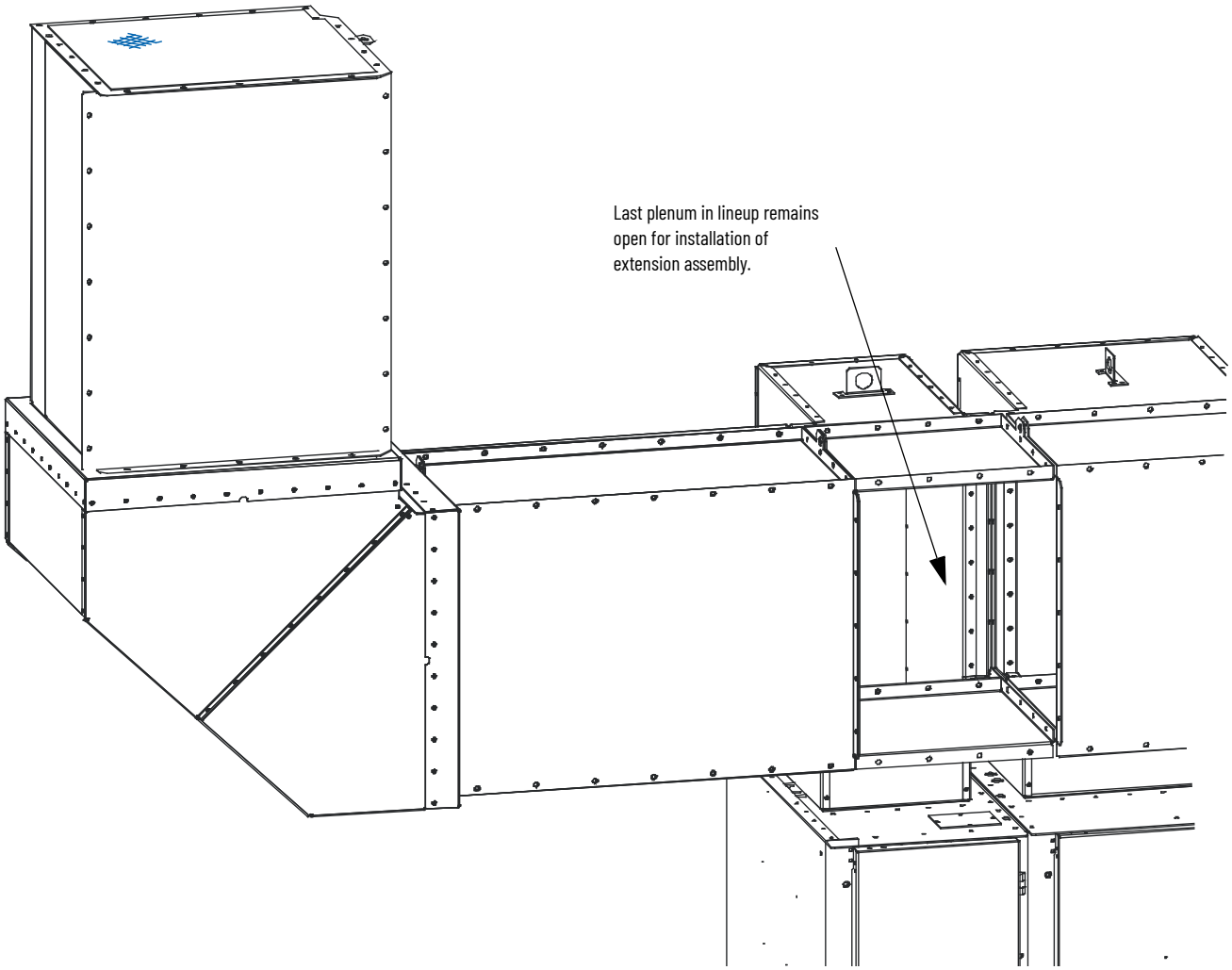

After the Extension/Elbow assembly is attached through the fastener holes on the inside flange of the plenum, replace the front duct section. Fasten the section through the holes on the outside flanges.

STEP 5 – Additional Mounting Support

The Extension/Elbow Assembly must have additional mounting support.

90° Elbow Section: Approximate weight 64 kg (142 lb)

36 inch Extension Assembly: Approximate weight 51 kg (112 lb)

Figure 61 shows an example of how to support the Extension/Elbow Sections by suspension from a high ceiling. Points **A**, **B** & **C** show where chains or high tension cables can be connected.

Figure 61 - Completed Assembly for optional vertical exit plenum (Left-hand exit)

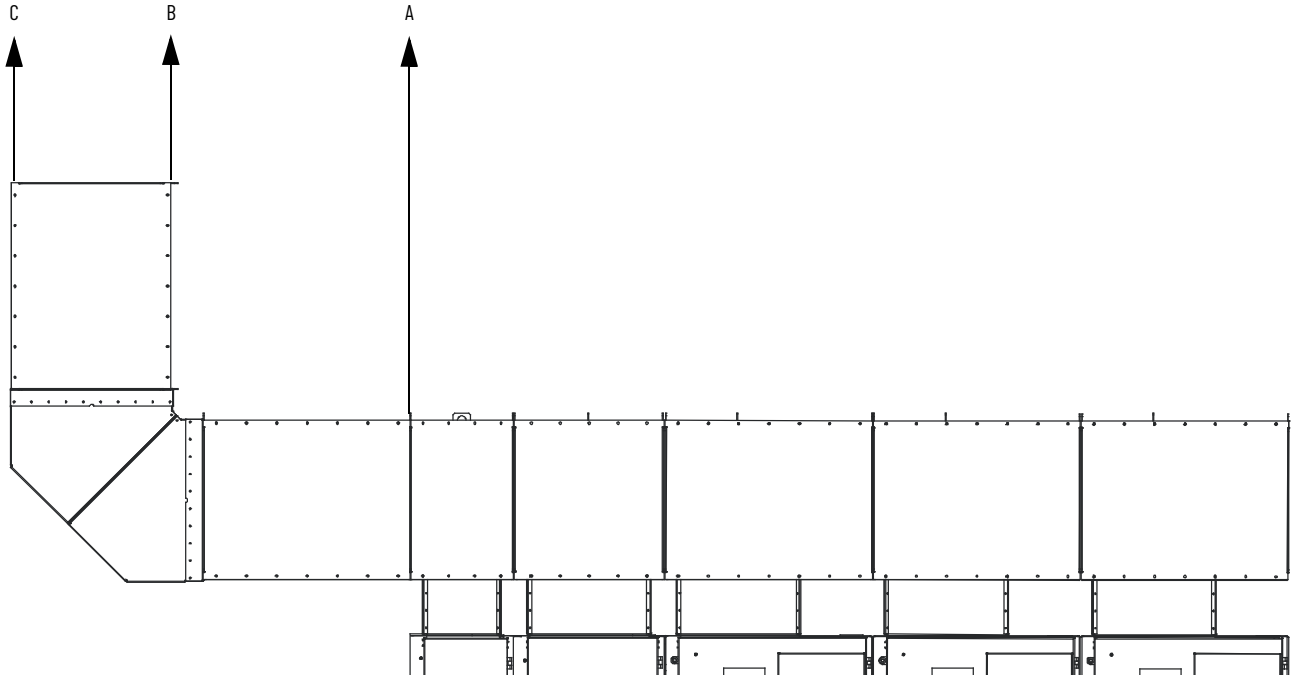

During an arc fault, the plenum is subjected to a brief high-pressure shock wave. The Extension/Elbow assembly can experience dynamic loading. It is important to account for dynamic loading when selecting a supporting means and materials.

Assembling the Plenum

Figure 62 - The Arc Shield Plenum Assembly

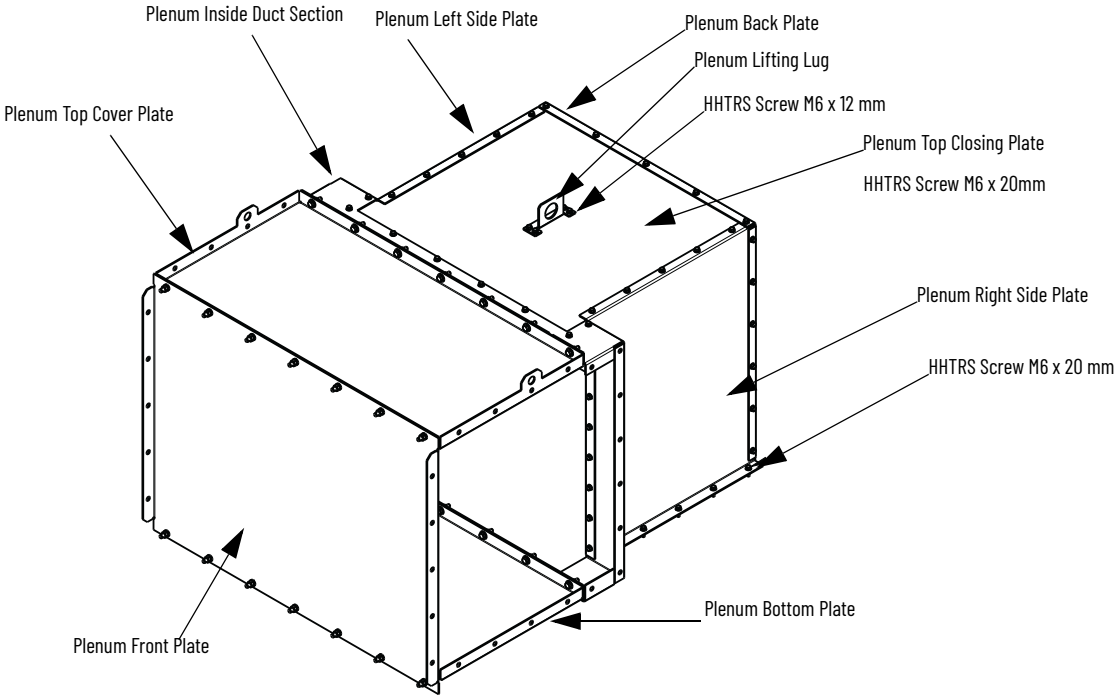

Installing the Plenum Plates

1. Install the plenum back, left, and right side plates in sequence.

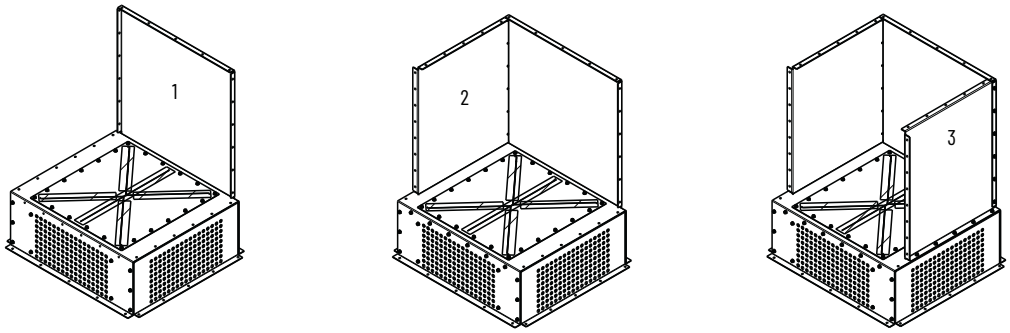

Plenum Back Plate | Plenum Left Side Plate | Plenum Right Side Plate

2. Align the bottom flange of the plates to match the installation holes of the ventilation box assembly. Insert the M6 x 20 mm taptites through the bottom flange of the plate.
3. Install the plenum inside duct plate. Insert the flanges of the left and right side plates into the duct cutout.

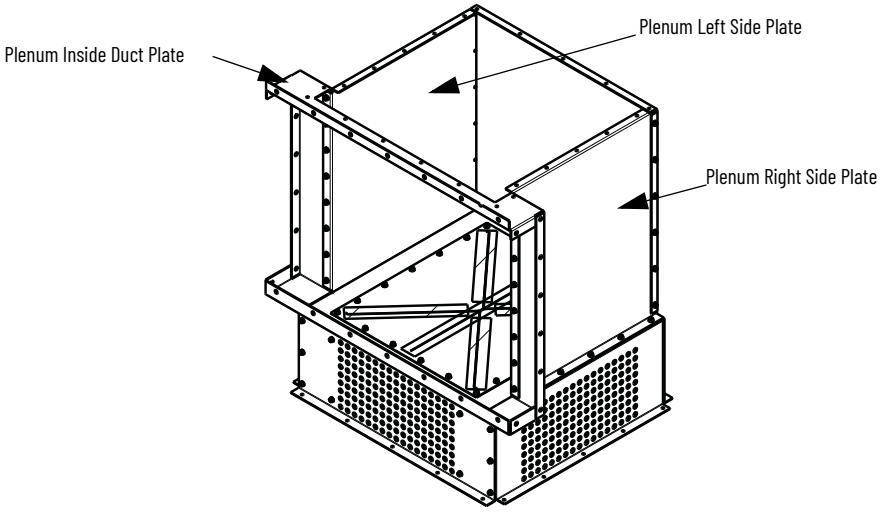

4. Insert M6 x 12 mm taptites.
5. Insert the plenum top closing plate into the plenum.

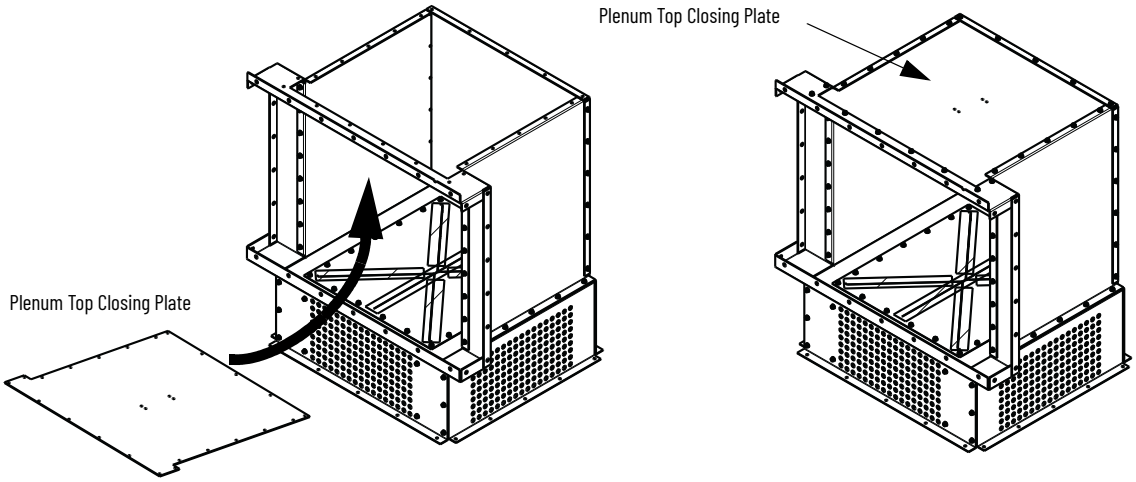

6. Move the plate to the top flange of the plenum sides.
7. Insert M6 x 12 mm taptites to attach the plate to the plenum sides.

8. Install the lifting lug to the plenum top cover plate using M6 x 12 mm taptites.

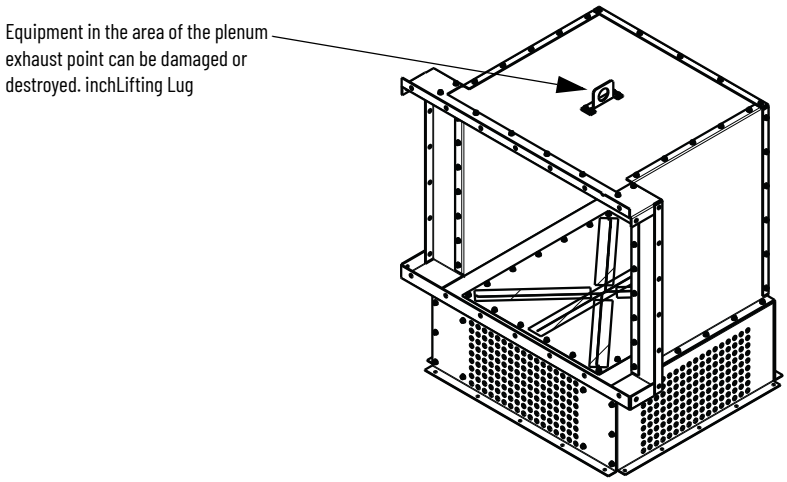

9. Install the plenum top cover plate.

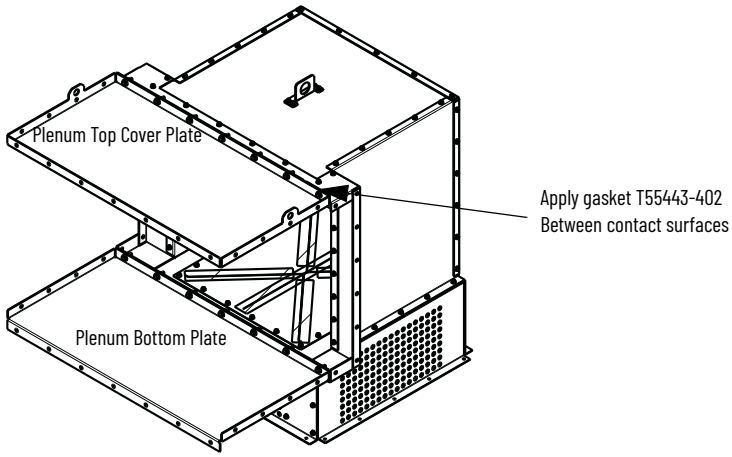

10. Apply the supplied gasket material (T5443-402) between the contact surface.
11. Attach the plate to the plenum using M8 x 28 mm bolts with 5/16 inch flat washers and lockwashers.
12. Install the plenum bottom plate.

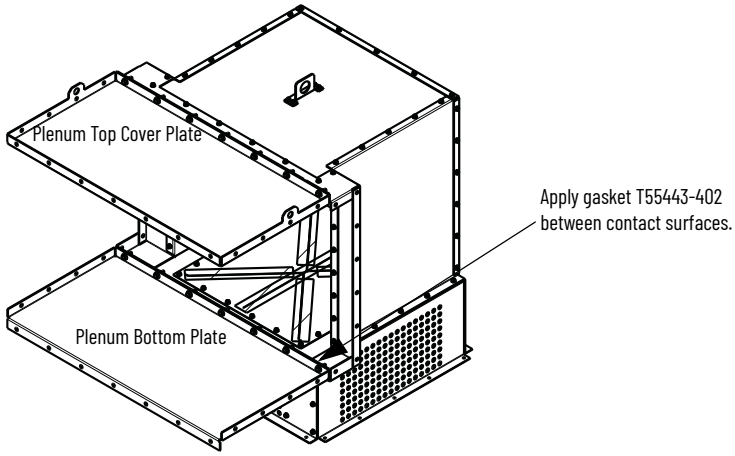

13. Apply the supplied gasket material (T5443-402) between the contact surface.

14. Attach the plate to the plenum using M8 x 28 mm bolts with 5/16 inch flat washers and lockwashers.
15. Attach the plenum front cover plate to the plenum using M8 x 28 mm bolts with 5/16 inch flat washers and lockwashers.

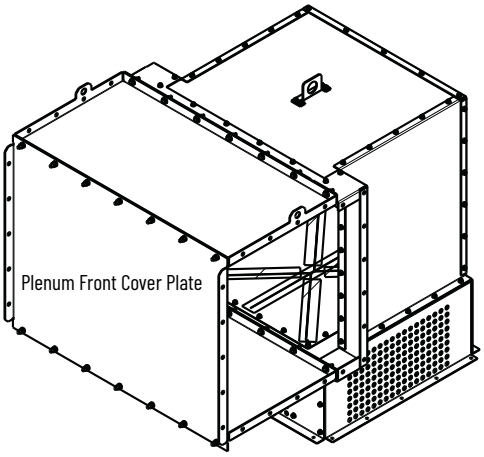

ArcShield Chimney and Plenum Assembly Instructions with Vent Box

ArcShield Chimney Installation Instructions

The following instructions are provided for the proper installation and function of the chimney that is supplied with ArcShield enclosures. See ArcShield Design on page 71 for additional information that is related to ArcShield chimney before attempting these instructions.

See Torque Requirements on page 95.

IMPORTANT	Plan the location where the plenum exhausts (refer to ArcShield Design on page 71). Mark the plenum exhaust area as a Hazardous Zone, and labeled per Figure 63.

Figure 63 - Chimney Exhaust Label

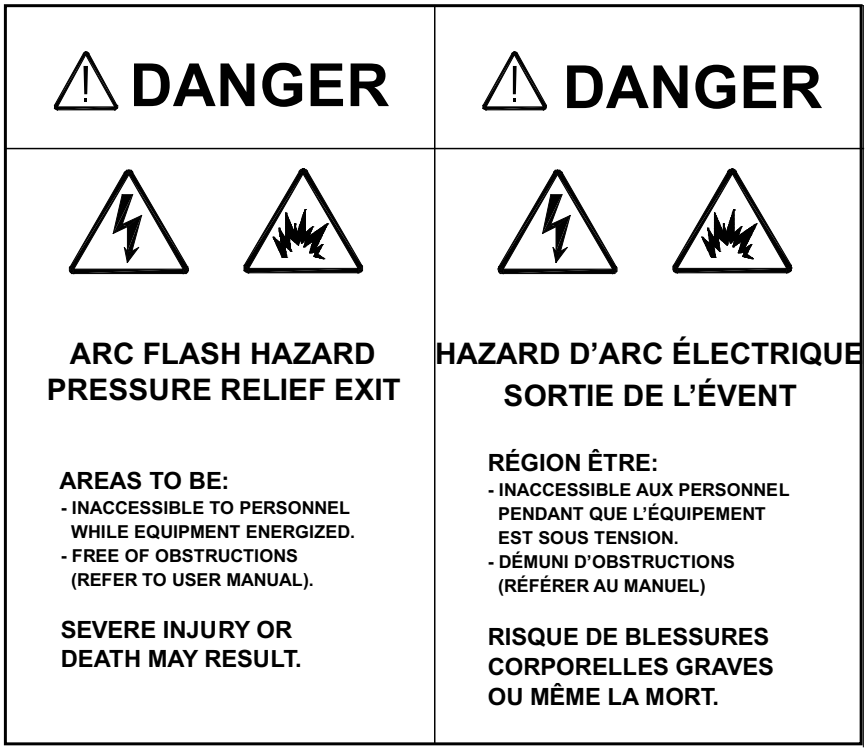

Cabinet Preparation

In preparation for mounting a chimney, the lifting lugs (the lifting angles) of the cabinet must be removed. The bolts retaining the lifting means must be replaced in the holes from where they came. Failure o replace the bolts removes the cabinets ability to control any arc gases properly.

ATTENTION: Hardware that is used to retain the lifting provision hardware must be reinstalled in the same holes. Failure to replace this hardware makes the arc resistance of the cabinet ineffective and could subject personnel to the possibility of severe burns, injury, or death.

Figure 64 - Chimney Placement

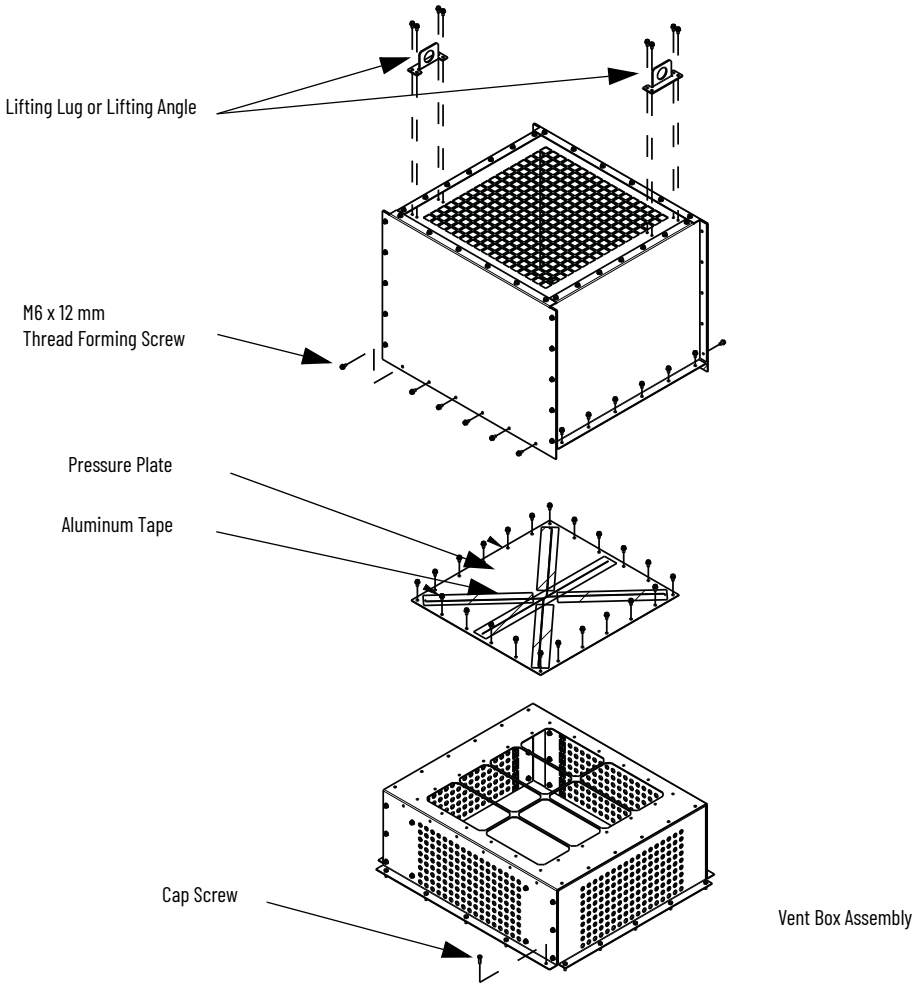

Vent Box Dimensions

Figure 65 - Vent Box with Arc Chimney Assembly

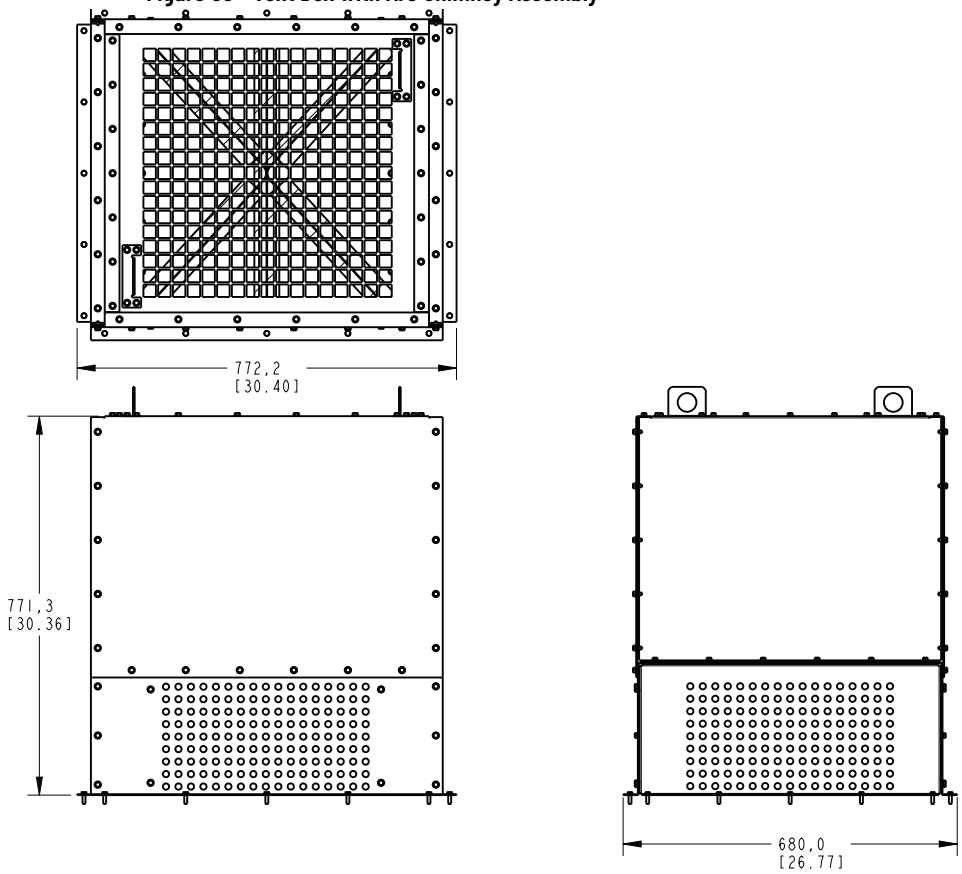

Notes:

General Reference

This section contains general reference information that can be used in conjunction with instructions and information throughout this manual.

For encoder usage, torque capabilities, and application load profiles, see PowerFlex® 7000 Medium Voltage AC Drives Technical Data, publication 7000-TD010.

Torque Requirements

Unless otherwise specified, use these torque values when maintaining the equipment.

Diameter	Pitch	Material	Torque (N•m)	Torque (lb•ft)
M2.5	0.45	Steel	0.43	0.32
M4	0.70	Steel	1.8	1.3
M5	0.80	Steel	3.4	2.5
M6	1.00	Steel	6.0	4.4
M8	1.25	Steel	14	11
M10	1.50	Steel	29	21
M12	1.75	Steel	50	37
M14	2.00	Steel	81	60
1/4 in.	20	Steel S.A.E. 5	12	9
5/16 in.	18	Steel	14	11
3/8 in.	16	Steel S.A.E. 2	27	20

Preventative Maintenance Schedule

By rigorously following this maintenance schedule, it improves the performance and operational lifespan of the drive with the highest possible uptime. Annual maintenance includes the following:

- Visual inspection of all drive components visible from the front of the unit.
- Resistance checks on the power components.
- Voltage level checks of the power supply.
- General cleaning and maintenance.
- Checking of all accessible power connections for tightness, and other tasks.

These tasks are described in detail in publication 7000-UM202.

I – Inspection	Indicates that the component must be inspected for signs of excessive accumulation of dust, dirt, or external damage. For example, examination of filter capacitors for bulges in the case, inspection of the heat sinks for debris that clogs the airflow path.
M – Maintenance	Indicates a maintenance task that is not a normal maintenance, and can include an inductance test of line reactors/DC Links, or the full testing of an isolation transformer.
R – Replacement	Indicates that the component has reached its mean operational life, and must be replaced to decrease the chance of component failure. It is likely that components exceed the design life in the drive, and that is dependent on many factors such as usage, heat.
C – Cleaning	Indicates the cleaning of a part that can be reused, and refers specifically to the door-mounted air filters in the liquid-cooled drives and some air-cooled drives.
Rv – Review	Refers to a discussion with Rockwell Automation® to determine whether any of the enhancements/changes made to the drive hardware and control would be valuable to the application.
RFB/R – Refurbishment/ Replacement	The parts can be refurbished at lower cost OR the parts can be replaced with new ones.

Insulation Resistance (IR) Testing

Drive IR Testing

When a ground fault occurs, there are three zones in which the problem can appear: input to the drive, the drive, and output to the motor. The ground fault condition indicates that a phase conductor has found a path to ground. A current with a magnitude that ranges from leakage to fault level exists that is dependent on the resistance of the path to ground. The drive itself rarely is a source of a ground fault when it is properly installed. Ground fault problems that are associated with the drive rarely occur. Normally the source of the fault exists in either the input or output zone.

Since the procedure for an IR test on the drive is more complex, it is recommended to first IR test the input and output zones when encountering a ground fault. If the location of the ground fault cannot be located outside the drive, IR test the drive.

ATTENTION: The IR test of the drive must be done with caution. Avoid hazards to drive by following the safety precautions in the IR Testing the PowerFlex 7000 Drive procedure. The IR Testing Procedures apply high voltage to ground. All control boards in the drive are grounded and if not isolated, the high potential that is applied to them can cause immediate damage.

IR Testing the PowerFlex 7000 Drive

ATTENTION: Use caution when performing the IR test. High-voltage testing is potentially hazardous and can cause severe burns, injury, or death. Where appropriate, connect the test equipment to ground.

Check the insulation levels before power equipment is energized. IR tests provide a resistance measurement from the phase-to-phase and phase-to-ground by applying a high voltage to the power circuitry. Perform this test to detect Ground faults without damaging any drive equipment.

ATTENTION: There are risks of serious or fatal injury to personnel if you do not follow safety guidelines.

IR Testing Procedures

Follow this procedure to perform IR tests on the PowerFlex® 7000 drive.

ATTENTION: Failure to comply with this procedure can result in poor IR test readings and damage to drive control boards.

Required equipment:

- Torque wrench and 7/16 in. socket.
- Phillips screwdriver.
- 2500/5000V insulation resistance tester.

1. Isolate and lockout the drive system from any high-voltage source.
   a. Disconnect any incoming power sources.
   b. Isolate and lockout medium-voltage sources.
   c. Turn off all control power sources at their respective circuit breakers.
   d. Verify with a potential indicator that power sources are disconnected, and that the control power in the drive is de-energized.
2. Isolate the power circuit from system ground ("float the drive").

   Remove the grounds on these components within the drive (refer to the electrical diagrams provided with the equipment to determine the points to disconnect):
   - Voltage sensing boards (VSB)
   - Output grounding network (OGN)

Voltage Sensing Boards

3. Remove all ground connections, at the screw terminals on the VSB, from all VSBs in the drive. There are two grounds on each board marked "GND 1", and "GND 2".

ATTENTION: Disconnect the terminals on the boards rather than from the ground bus as the grounding cable is only rated for 600V. The Injection of a high voltage on the ground cable degrades the cable insulation. Do not disconnect the white medium-voltage wires from the VSBs. They must be included in the test.

The number of VSBs installed in each drive varies depending on the drive configuration.

Disconnect Output Grounding Network

4. Remove the ground connection on the OGN (if installed). Lift this connection at the OGN capacitor rather than the grounding bus, as the grounding cable is only rated for 600V.

ATTENTION: The Injection of a high voltage on the ground cable during an IR test degrades the cable insulation.

5. Disconnect connections between power circuit and low voltage control.

Disconnect Voltage Sensing Boards

The connections between the low voltage control and the power circuit are made through ribbon cable connectors. The cables are plugged into connectors on the voltage sensing board that is marked “J1”, “J2”, and “J3”, and terminate on the signal conditioning boards. Every ribbon cable connection that is made on the VSBs is marked for identification.

6. Confirm the marking matches the connections, and disconnect the ribbon cables and move them clear of the VSB. If the ribbon cables are not removed from the VSB, then high potential applies directly to the low voltage control through the SCBs and damages those boards.

ATTENTION: The VSB ribbon cable insulation is not rated for the potential that is applied during an IR test. You must disconnect the ribbon cables at the VSB rather than the SCB to avoid exposing the ribbon cables to high potential.

Removing Potential Transformer Fuses

A IR test can exceed the rating of potential transformer fusing. To avoid damage:

7. Remove the primary fuses from all potential and control power transformers in the system. It also removes a path from the power circuit back to the drive control.

Isolate Transient Suppression Network

A path to ground exists through the TSN network as it has a ground connection that dissipates high energy surges in normal operation. This ground path must be isolated. If this ground connection is not isolated, the IR test indicates a high leakage current through this path and falsely indicates a problem in the drive.

8. Remove all fuses on the TSN before proceeding with the IR test.

Surge Arrestors

Drives that are supplied after 2009 have surge arrestors instead of a TSN. Surge arrestors can remain in the circuit during the IR test procedure.

9. IR test the drive.

IMPORTANT Verify the drive and any connected equipment is clear of personnel and tools before starting the IR test. Barricade any open or exposed conductors. Conduct a walk-around inspection before commencing the test.

All three phases on the line and machine sides of the drive connect through the DC Link and snubber network. A test from any one of the input or output terminals to ground sufficiently tests the drive.

ATTENTION: Discharge the IR tester before it is disconnected from the equipment.

a. Connect the IR tester to the drive. Follow the specific instructions for that drive model.

b. If the IR tester has a lower voltage setting (normally 500V or 1000V), apply that voltage for 5 seconds. Do the test as a precursor for a higher voltage rating. If you forgot to remove any grounds, it can limit the damage. If the reading is high, apply 5 kV from any drive input or output terminal to ground.

c. Perform an IR test at 5 kV for 1 minute and record the result.

The test readings must be greater than the minimum values listed in Table 11 on page 100.

Low Test Results

10. If the test results are lower than the listed values, segment the drive system into smaller components. Repeat the test on each segment until the source of the ground fault is identified.
    a. Isolate the line side of the drive from the machine side by removing the appropriate cables on the DC Link reactor.
    b. Isolate the DC Link reactor from the drive by disconnecting the four power cables.
    c. Verify that all electrical components being IR tested are electrically isolated from ground.

    Items that produce lower than expected readings are surge capacitors at the motor terminals and motor filter capacitors at the output of the drive. The IR test procedure must follow a systematic segmentation of electrical components to isolate and locate a ground fault.

Table 11 - Test Readings

Type of Drive	Minimum IR Tester Value
Liquid-cooled Drive	200 MΩ
Air-cooled Drive	1k MΩ
Drive with input/output Caps Disconnected	5k MΩ
Isolation Transformer	5k MΩ
Motor	5k MΩ

The motor filter capacitors and line filter capacitors (if applicable) can skew the IR test result as being lower than expected. The capacitors have internal discharge resistors that discharge the capacitors to ground. If the IR test results are skewed, disconnect the output capacitors.

IMPORTANT Humidity and dirty standoff insulators can cause leakage to ground because of tracking. Clean a 'dirty' drive before starting the IR test.

11. Reconnect connections between power circuit and low voltage control.

    Reconnect the ribbon cables “J1”, “J2” and “J3” in all VSBs. Do not cross the cable connections.

ATTENTION: Incorrect placement of the feedback cables can result in serious damage to the drive. Make sure that they are connected to the proper location

12. Reconnect the power circuit to the system ground.

Reconnect Voltage Sensing Boards

13. Reconnect the two ground conductors on the VSBs.

    The conductors provide a reference point for the VSB and enable the low voltage signal to be fed to the SCBs. If the ground conductors are not connected, the monitored low voltage signal rises to medium voltage potential, which is a serious hazard.

    Make sure that the ground conductors on the VSB are securely connected before applying medium voltage to the drive.

> **ATTENTION:** Failure to connect both ground connections on the voltage sensing board results in high potential in the low voltage cabinet within the drive. This high potential can damages the drive control and could cause injury or death to personnel.

Reconnect Output Grounding Network

14. Reconnect the ground connection on the OGN capacitor. Torque the bolt connection to 3.4 N•m (30 lb•in.). Do Not Exceed the torque rating of this connection, it results in damage to the capacitor.

> **ATTENTION:** Failure to reconnect the OGN ground can result in impressing the neutral voltage offset on the motor cables and stator, which can result in equipment damage.

    For drives that did not originally have the OGN connected (or installed), there is no need for concern.

Enable Transient Suppression Network

    a. Reinstall the fuses on the TSN.

Notes:

History of Changes

This appendix contains the new or updated information for each revision of this publication. These lists include substantive updates only and are not intended to reflect all changes. Translated versions are not always available for each revision.

7000-IN007H-EN-P, November 2021

Topic
Replaced arc resistant label to reflect updated fuse types
Added procedure to install external cooling fan ducting

7000-IN007G-EN-P, May 2021

Topic
Added procedure to install Ziehl-Abegg main fan assembly

7000-IN007F-EN-P, July 2016

Topic
Changed standard IEEE 519-1992 to IEEE 519-1992
Added Safe Torque Off section
Added Arc Resistance Warning Labels section
Updated DC Link/Fan Cabinet with Fan Control Panel (Heat Sink Model)
Updated DC Link/Fan Cabinet CMC (Heat Pipe Model)
Updated DC Link/Fan Cabinet
The location of Shock indication label is changed
Updated Main and Choke Sections of 6600V Heat Pipe Drive Cabinetry
Updated Access to power terminals (AFE (heat pipe model) illustration
Added ArcShield™ Unit Information
Added Output Current Harmonics to Specifications Appendix

Notes:

Numerics

A

C

D

E

F

G

H

I

Rockwell Automation Support

Use these resources to access support information.

Technical Support Center	Find help with how-to videos, FAQs, chat, user forums, Knowledgebase, and product notification updates.	rok.auto/support
Local Technical Support Phone Numbers	Locate the telephone number for your country.	rok.auto/phonesupport
Technical Documentation Center	Quickly access and download technical specifications, installation instructions, and user manuals.	rok.auto/techdocs
Literature Library	Find installation instructions, manuals, brochures, and technical data publications.	rok.auto/literature
Product Compatibility and Download Center (PCDC)	Download firmware, associated files (such as AOP, EDS, and DTM), and access product release notes.	rok.auto/pcdc

Documentation Feedback

Your comments help us serve your documentation needs better. If you have any suggestions on how to improve our content, complete the form at rok.auto/docfeedback.

Waste Electrical and Electronic Equipment (WEEE)

At the end of life, this equipment should be collected separately from any unsorted municipal waste.

Rockwell Automation maintains current product environmental compliance information on its website at rok.auto/pec.

Rockwell Otomasyon Ticaret A.Ş. Kar Plaza İş Merkezi E Blok Kat:6 34752, İçerenköy, İstanbul, Tel: +90 (216) 5698400 EEE Yönetmeliğine Uygundur

Connect with us.

rockwellautomation.com — expanding **human possibility**®

AMERICAS: Rockwell Automation, 1201 South Second Street, Milwaukee, WI 53204-2496 USA, Tel: (1) 414.382.2000, Fax: (1) 414.382.4444
EUROPE/MIDDLE EAST/AFRICA: Rockwell Automation NV, Pegasus Park, De Kleetlaan 12a, 1831 Diegem, Belgium, Tel: (32) 2 663 0600, Fax: (32) 2 663 0640
ASIA PACIFIC: Rockwell Automation, Level 14, Core F, Cyberport 3, 100 Cyberport Road, Hong Kong, Tel: (852) 2887 4788, Fax: (852) 2508 1846
UNITED KINGDOM: Rockwell Automation Ltd. Pitfield, Kiln Farm Milton Keynes, MK11 3DR, United Kingdom, Tel: (44)(1908) 838-800, Fax: (44)(1908) 261-917

Publication 7000-IN007I-EN-P - May 2023
Supersedes Publication 7000-IN007H-EN-P - November 2021