Installation Instructions

Original Instructions

Allen-Bradley by ROCKWELL AUTOMATION

Industrial Computers and Thin Clients for Hazardous Locations, Series J

Catalog Numbers 6181X-000NWNNDNB-3xNNNNxG-xxx(x), 6181X-000NWNNDNB-3xxxxxxG-xxx(x), 6181X-121PPMXDNB-3xNNNNxG-xxx(x), and 6181X-121PPMXDNB-3xxxxxxG-xxx(x)

Summary of Changes

This publication contains the following new or updated information. This list includes substantive updates only and is not intended to reflect all changes.

Topic	Page
Added Attention multilingual table	2
Added French translation for all Warning and Attention tables	Throughout
Updated categories within Location Categories for Hazardous Locations table	4
Updated RoHS Disclosure	14

Rockwell Automation

ATTENTION: Read this document and the documents listed in the Additional Resources section about installation, configuration and operation of this equipment before you install, configure, operate or maintain this product. Users are required to familiarize themselves with installation and wiring instructions in addition to requirements of all applicable codes, laws, and standards.

Activities including installation, adjustments, putting into service, use, assembly, disassembly, and maintenance are required to be carried out by suitably trained personnel in accordance with applicable code of practice. If this equipment is used in a manner not specified by the manufacturer, the protection provided by the equipment may be impaired.

注意：在安装、配置、操作和维护本产品前，请阅读本文档以及 “ 其他资源 ” 部分列出的有关设备安装、配置和操作的相应文档。除了所有适用规范、法律和标准的相关要求之外，用户还必须熟悉安装和接线说明。

安装、调整、投运、使用、组装、拆卸和维护等各项操作必须由经过适当训练的专业人员按照适用的操作规范实施。

如果未按照制造商指定的方式使用该设备，则可能会损害设备提供的保护。

ATENCIÓN: Antes de instalar, configurar, poner en funcionamiento o realizar el mantenimiento de este producto, lea este documento y los documentos listados en la sección Recursos adicionales acerca de la instalación, configuración y operación de este equipo. Los usuarios deben familiarizarse con las instrucciones de instalación y cableado y con los requisitos de todos los códigos, leyes y estándares vigentes.

El personal debidamente capacitado debe realizar las actividades relacionadas a la instalación, ajustes, puesta en servicio, uso, ensamblaje, desensamblaje y mantenimiento de conformidad con el código de práctica aplicable. Si este equipo se usa de una manera no especificada por el fabricante, la protección provista por el equipo puede resultar afectada.

ATENÇÃO: Leia este e os demais documentos sobre instalação, configuração e operação do equipamento que estão na seção Recursos adicionais antes de instalar, configurar, operar ou manter este produto. Os usuários devem se familiarizar com as instruções de instalação e fiação além das especificações para todos os códigos, leis e normas aplicáveis.

É necessário que as atividades, incluindo instalação, ajustes, colocação em serviço, utilização, montagem, desmontagem e manutenção sejam realizadas por pessoal qualificado e especializado, de acordo com o código de prática aplicável.

Caso este equipamento seja utilizado de maneira não estabelecida pelo fabricante, a proteção fornecida pelo equipamento pode ficar prejudicada.

ВНИМАНИЕ: Перед тем как устанавливать, настраивать, эксплуатировать или обслуживать данное оборудование, прочитайте этот документ и документы, перечисленные в разделе «Дополнительные ресурсы». В этих документах изложены сведения об установке, настройке и эксплуатации данного оборудования. Пользователи обязаны ознакомиться с инструкциями по установке и прокладке соединений, а также с требованиями всех применимых норм, законов и стандартов.

Все действия, включая установку, наладку, ввод в эксплуатацию, использование, сборку, разборку и техническое обслуживание, должны выполняться обученным персоналом в соответствии с применимыми нормами и правилами.

Если оборудование используется не предусмотренным производителем образом, защита оборудования может быть нарушена.

注意：本製品を設置、構成、稼動または保守する前に、本書および本機器の設置、設定、操作についての参考資料の該当箇所に記載されている文書に目を通してください。ユーザは、すべての該当する条例、法律、規格の要件に加えて、設置および配線の手順に習熟している必要があります。

設置調整、運転の開始、使用、組立て、解体、保守を含む諸作業は、該当する実施規則に従って訓練を受けた適切な作業員が実行する必要があります。

本機器が製造メーカにより指定されていない方法で使用されている場合、機器により提供されている保護が損なわれる恐れがあります。

ACHTUNG: Lesen Sie dieses Dokument und die im Abschnitt „Weitere Informationen"aufgeführten Dokumente, die Informationen zu Installation, Konfiguration und Bedienung dieses Produkts enthalten, bevor Sie dieses Produkt installieren, konfigurieren, bedienen oder warten. Anwender müssen sich neben den Bestimmungen aller anwendbaren Vorschriften, Gesetze und Normen zusätzlich mit den Installations- und Verdrahtungsanweisungen vertraut machen.

Arbeiten im Rahmen der Installation, Anpassung, Inbetriebnahme, Verwendung, Montage, Demontage oder Instandhaltung dürfen nur durch ausreichend geschulte Mitarbeiter und in Übereinstimmung mit den anwendbaren Ausführungsvorschriften vorgenommen werden.

Wenn das Gerät in einer Weise verwendet wird, die vom Hersteller nicht vorgesehen ist, kann die Schutzfunktion beeinträchtigt sein.

ATTENTION : Lisez ce document et les documents listés dans la section Ressources complémentaires relatifs à l'installation, la configuration et le fonctionnement de cet équipement avant d'installer, configurer, utiliser ou entretenir ce produit. Les utilisateurs doivent se familiariser avec les instructions d'installation et de câblage en plus des exigences relatives aux codes, lois et normes en vigueur.

Les activités relatives à l'installation, le réglage, la mise en service, l'utilisation, l'assemblage, le démontage et l'entretien doivent être réalisées par des personnes formées selon le code de pratique en vigueur.

Si cet équipement est utilisé d'une façon qui n'a pas été définie par le fabricant, la protection fournie par l'équipement peut être compromise.

주의 : 본 제품 설치 , 설정 , 작동 또는 유지 보수하기 전에 본 문서를 포함하여 설치 , 설정 및 작동에 관한 참고 자료 섹션의 문서들을 반드시 읽고 숙지하십시오 . 사용자는 모든 관련 규정 , 법규 및 표준에서 요구하는 사항에 대해 반드시 설치 및 배선 지침을 숙지해야 합니다 .

설치 , 조정 , 가동 , 사용 , 조립 , 분해 , 유지보수 등 모든 작업은 관련 규정에 따라 적절한 교육을 받은 사용자를 통해서만 수행해야 합니다 .

본 장비를 제조사가 명시하지 않은 방법으로 사용하면 장비의 보호 기능이 손상될 수 있습니다 .

ATTENZIONE Prima di installare, configurare ed utilizzare il prodotto, o effettuare interventi di manutenzione su di esso, leggere il presente documento ed i documenti elencati nella sezione "Altre risorse", riguardanti l'installazione, la configurazione ed il funzionamento dell'apparecchiatura. Gli utenti devono leggere e comprendere le istruzioni di installazione e cablaggio, oltre ai requisiti previsti dalle leggi, codici e standard applicabili.

Le attività come installazione, regolazioni, utilizzo, assemblaggio, disassemblaggio e manutenzione devono essere svolte da personale adeguatamente addestrato, nel rispetto delle procedure previste.

Qualora l'apparecchio venga utilizzato con modalità diverse da quanto previsto dal produttore, la sua funzione di protezione potrebbe venire compromessa.

DİKKAT: Bu ürünün kurulumu, yapılandırılması, işletilmesi veya bakımı öncesinde bu dokümanı ve bu ekipmanın kurulumu, yapılandırılması ve işletimi ile ilgili İlave Kaynaklar bölümünde yer listelenmiş dokümanları okuyun. Kullanıcılar yürürlükteki tüm yönetmelikler, yasalar ve standartların gereksinimlerine ek olarak kurulum ve kablolama talimatlarını da öğrenmek zorundadır.

Kurulum, ayarlama, hizmete alma, kullanma, parçaları birleştirme, parçaları sökme ve bakım gibi aktiviteler sadece uygun eğitimleri almış kişiler tarafından yürürlükteki uygulama yönetmeliklerine uygun şekilde yapılabilir.

Bu ekipman üretici tarafından belirlenmiş amacın dışında kullanılırsa, ekipman tarafından sağlanan koruma bozulabilir.

注意事項：在安裝、設定、操作或維護本產品前，請先閱讀此文件以及列於 「其他資源」章節中有關安裝、設定與操作此設備的文件。使用者必須熟悉安裝和配線指示，並符合所有法規、法律和標準要求。

包括安裝、調整、交付使用、使用、組裝、拆卸和維護等動作都必須交由已經過適當訓練的人員進行，以符合適用的實作法規。

如果將設備用於非製造商指定的用途時，可能會造成設備所提供的保護功能受損。

POZOR: Než začnete instalovat, konfigurovat či provozovat tento výrobek nebo provádět jeho údržbu, přečtěte si tento dokument a dokumenty uvedené v části Dodatečné zdroje ohledně instalace, konfigurace a provozu tohoto zařízení. Uživatelé se musejí vedle požadavků všech relevantních vyhlášek, zákonů a norem nutně seznámit také s pokyny pro instalaci a elektrické zapojení.

Činnosti zahrnující instalaci, nastavení, uvedení do provozu, užívání, montáž, demontáž a údržbu musí vykonávat vhodně proškolený personál v souladu s příslušnými prováděcími předpisy.

Pokud se toto zařízení používá způsobem neodpovídajícím specifikaci výrobce, může být narušena ochrana, kterou toto zařízení poskytuje.

UWAGA: Przed instalacją, konfiguracją, użytkowaniem lub konserwacją tego produktu należy przeczytać niniejszy dokument oraz wszystkie dokumenty wymienione w sekcji Dodatkowe źródła omawiające instalację, konfigurację i procedury użytkowania tego urządzenia. Użytkownicy mają obowiązek zapoznać się z instrukcjami dotyczącymi instalacji oraz oprzewodowania, jak również z obowiązującymi kodeksami, prawem i normami.

Działania obejmujące instalację, regulację, przekazanie do użytkowania, użytkowanie, montaż, demontaż oraz konserwację muszą być wykonywane przez odpowiednio przeszkolony personel zgodnie z obowiązującym kodeksem postępowania.

Jeśli urządzenie jest użytkowane w sposób inny niż określony przez producenta, zabezpieczenie zapewniane przez urządzenie może zostać ograniczone.

OBS! Läs detta dokument samt dokumentet, som står listat i avsnittet Övriga resurser, om installation, konfigurering och drift av denna utrustning innan du installerar, konfigurerar eller börjar använda eller utföra underhållsarbete på produkten. Användare måste bekanta sig med instruktioner för installation och kabeldragning, förutom krav enligt gällande koder, lagar och standarder.

Åtgärder som installation, justering, service, användning, montering, demontering och underhållsarbete måste utföras av personal med lämplig utbildning enligt lämpligt bruk.

Om denna utrustning används på ett sätt som inte anges av tillverkaren kan det hända att utrustningens skyddsanordningar försätts ur funktion.

LET OP: Lees dit document en de documenten die genoemd worden in de paragraaf Aanvullende informatie over de installatie, configuratie en bediening van deze apparatuur voordat u dit product installeert, configureert, bediend of onderhoudt. Gebruikers moeten zich vertrouwd maken met de installatie en de bedradingsinstructies, naast de vereisten van alle toepasselijke regels, wetten en normen.

Activiteiten zoals het installeren, afstellen, in gebruik stellen, gebruiken, monteren, demonteren en het uitvoeren van onderhoud mogen uitsluitend worden uitgevoerd door hiervoor opgeleid personeel en in overeenstemming met de geldende praktijkregels.

Indien de apparatuur wordt gebruikt op een wijze die niet is gespecificeerd door de fabrikant, dan bestaat het gevaar dat de beveiliging van de apparatuur niet goed werkt.

Installation Precautions

Read and follow these precautions before you install your industrial computer or thin client for hazardous locations.

Environment and Enclosure Information

ATTENTION: This equipment is intended for use in a Pollution Degree 2 industrial environment, in overvoltage Category II applications (as defined in IEC 60664-1), at altitudes up to 2000 m (6561 ft) without derating.
This equipment is considered Group 1, Class A industrial equipment according to IEC/CISPR 32 and ABNT NBR IEC/CISPR 32. Without appropriate precautions, there can be potential difficulties with electromagnetic compatibility in other environments due to conducted and radiated disturbance.
The equipment must be panel-mounted or open-type, and installed in a tool-only accessible enclosure that is suitable for the environment.
All 6181X-121 integrated display industrial computers and 6181X-121 integrated display thin clients are shipped with a gasketed bezel to meet specified ratings when mounted in a panel or enclosure with an equivalent rating. For more information about these ratings, see Hazardous Location Information on page 4.
In addition to this publication, see the following:

- Publication 1770-4.1, Industrial Automation Wiring and Grounding Guidelines, for more installation requirements
- ABNT NBR IEC 60529, NEMA 250, UL 50, and IEC 60529, as applicable to your region, for explanations of the degrees of protection that are provided by enclosures

ATTENTION : Cet équipement est prévu pour fonctionner en environnement industriel avec une pollution de niveau 2, dans des applications de surtension de catégorie II (telles que définies dans la norme CEI 60664-1) et à une altitude maximum de 2 000 mètres (6 561 pieds) sans déclassement.
Cet équipement fait partie des équipements industriels de Groupe 1, Classe A selon les normes CEI/CISPR 32 et ABNT NBR CEI/CISPR 32. Sans précautions suffisantes, il se peut que la compatibilité électromagnétique ne soit pas garantie dans les zones résidentielles et autres environnements, en raison de perturbations par conduction et par rayonnement.
Cet équipement doit être monté sur panneau ou être de type ouvert. Il est installé à l'intérieur d'une armoire accessible uniquement à l'aide d'un outil, adapté à l'environnement.
Tous les PC industriels à écran intégré 6181X-121 et les clients légers à écran intégré 6181X-121 sont fournis avec un boîtier étanche satisfaisant à des exigences spécifiques lorsqu'ils sont montés sur un panneau ou dans une armoire de classification équivalente. Pour de plus amples informations sur ces classifications, voir Hazardous Location Information on page 4.
En plus de cette publication, consultez :

- la publication 1770-4.1, « Industrial Automation Wiring and Grounding Guidelines », pour d'autres critères d'installation
- les normes ABNT NBR CEI 60529, NEMA 250, UL 50 et CEI 60529, selon le cas, pour des explications sur les niveaux de protection assurés par les différents types d'armoire.

European Union Directive/United Kingdom Regulations

These industrial computers and thin clients meet the European Union Directive requirements when installed within the European Union or EEA regions and has the CE marking. Additionally, these industrial computers and thin clients meet the United Kingdom regulation requirements when installed within the United Kingdom and has the UKCA marking. Copies of the declarations of conformity are available at rok.auto/certifications.

ATTENTION: To comply with EN 55035 and EN 55032, the following applies to cable usage:

- USB cables must be less than 3 m (9.84 ft) in length.
- All I/O cables, except for Ethernet cables, must be used indoors.
- All I/O cables, except for Ethernet cables, cannot exit the building at any point and cannot directly connect to cables outside the building.

ATTENTION : Pour êtes conforme aux normes EN 55035 et EN 55032, utilisez les types de câble suivants.

- Les câbles USB doivent être de longueur inférieure à 3 m (9,84 ft)
- Tous les câbles d'E/S, à l'exception des câbles Ethernet, doivent être utilisés à l'intérieur
- Tous les câbles d'E/S, à l'exception des câbles Ethernet ne peuvent pas sortir du bâtiment et ne peuvent pas être branchés directement aux câbles à l'extérieur du bâtiment.

To comply with EN 55035 and EN 55032, use the following for cable types:

Cable Type	Required Attribute
LAN	Shielded or unshielded
USB	Shielded

Cable Type	Required Attribute
Serial RS-232	Shielded
DVI	Shielded

Cable Type	Required Attribute
DisplayPort	Shielded
DC Power	Unshielded

Hazardous Location Information

This equipment meets the following certifications. For the most current information on all certifications, visit the Rockwell Automation Product Certifications website at rok.auto/certifications and use '6181X-CT' as the search term.

North American Hazardous Location Approval

The following information applies when operating this equipment in hazardous locations.	**Informations sur l'utilisation de cet équipement en environnements dangereux.**
Products marked "CL I, DIV 2, GP A, B, C, D" are suitable for use in Class I Division 2 Groups A, B, C, D, Hazardous Locations and nonhazardous locations only. Each product is supplied with markings on the rating nameplate indicating the hazardous location temperature code. When combining products within a system, the most adverse temperature code (lowest "T" number) may be used to help determine the overall temperature code of the system. Combinations of equipment in your system are subject to investigation by the local Authority Having Jurisdiction at the time of installation.	Les produits marqués "CL I, DIV 2, GP A, B, C, D" ne conviennent qu'à une utilisation en environnements de Classe I Division 2 Groupes A, B, C, D dangereux et non dangereux. Chaque produit est livré avec des marquages sur sa plaque d'identification qui indiquent le code de température pour les environnements dangereux. Lorsque plusieurs produits sont combinés dans un système, le code de température le plus défavorable (code de température le plus faible) peut être utilisé pour déterminer le code de température global du système. Les combinaisons d'équipements dans le système sont sujettes à inspection par les autorités locales qualifiées au moment de l'installation.
WARNING: **Explosion Hazard –** • Do not disconnect equipment unless power has been removed or the area is known to be nonhazardous. • Do not disconnect connections to this equipment unless power has been removed or the area is known to be nonhazardous. Secure any external connections that mate to this equipment by using screws, sliding latches, threaded connectors, or other means provided with this product. • Substitution of components may impair suitability for Class I, Division 2. • If this product contains batteries, they must only be changed in an area known to be nonhazardous.	**AVERTISSEMENT:** **Risque d'Explosion –** • Couper le courant ou s'assurer que l'environnement est classé non dangereux avant de débrancher l'équipement. • Couper le courant ou s'assurer que l'environnement est classé non dangereux avant de débrancher les connecteurs. Fixer tous les connecteurs externes reliés à cet équipement à l'aide de vis, loquets coulissants, connecteurs filetés ou autres moyens fournis avec ce produit. • La substitution de composants peut rendre cet équipement inadapté à une utilisation en environnement de Classe I, Division 2. • S'assurer que l'environnement est classé non dangereux avant de changer les piles.

Table 1 - Location Categories for Hazardous Locations

Integrated Display			
Region	**Rating**		**Temperature Range**
United States	Class I Division 2, Groups A, B, C, D T4 Class II Division 2, Groups F, G T6 Class III Division 1 T6		-20 °C ≤ T_a ≤ 55 °C (-4 °F ≤ T_a ≤ 131 °F) (display side) -20 °C ≤ T_a ≤ 70 °C (-4 °F ≤ T_a ≤ 158 °F) (backside)
	Class I Zone 2, IIC, T4 Class II Zone 22, IIIB, T70 °C		
Canada	Class I Division 2, Groups A, B, C, D T4 Class II Division 2, Groups F, G T6 Class III Division 1 T6		
	Class I Zone 2, IIC, T4 Class II Zone 22, IIIB, T70 °C		
Europe (ATEX)	Ex	II 3 GD, Ex ec IIC T4 Gc Ex tc IIIC T70 °C Dc UL 23 ATEX 3066X	
United Kingdom (UKEX)	Ex	II 3 GD, Ex ec IIC T4 Gc Ex tc IIIC T70 °C Dc UL23UKEX2943X	
Global/IECEx	Ex ec IIC T4 Gc Ex tc IIIC T70°C Dc IECEx UL 23.0060X		
Brazil (INMETRO)	Número 0434B da ISO 7000	Ex ec IIC T4 Gc Ex tc IIIC T70°C Dc UL-BR 23.1284X	
China (CCC)	Ex ec IIC T4 Gc Ex tc IIIC T70°C Dc		

Non-display			
Region	**Rating**		**Temperature Range**
United States	Class I Division 2, Groups A, B, C, D T4		-20 °C ≤ T_a ≤ 70 °C (-4 °F ≤ T_a ≤ 158 °F)
	Class I Zone 2, IIC, T4		
Canada	Class I Division 2, Groups A, B, C, D T4		
	Class I Zone 2, IIC, T4		
Europe (ATEX)	Ex	II 3 G, Ex ec IIC T4 Gc, UL 23 ATEX 3066X	
United Kingdom (UKEX)	Ex	II 3 G, Ex ec IIC T4 Gc, UL23UKEX2943X	
Global/IECEx	Ex ec IIC T4 Gc, IECEx UL 23.0060X		
Brazil (INMETRO)	Número 0434B da ISO 7000	Ex ec IIC T4 Gc UL-BR 23.1284X	
China (CCC)	Ex ec IIC T4 Gc		

RoHS Disclosure Table

See Restriction of Hazardous Substances (RoHS), PEC-TD003.

IMPORTANT	All 6181X Series J industrial computers and thin clients for hazardous locations can only be used in non-hazardous locations in any Eurasian Conformity region.

Outdoor Installation – Integrated Display Models

If your integrated display model (Cat. No. 6181X-121PPMXDNB-3*xxxxxx*G-*xxx*(*x*)) will be used outdoors, consider the following to maximize the field life of the front bezel and integrated display:

- Select the proper enclosure
- Horizontal position while maintaining a 0° vertical position

Ultraviolet (UV) and infrared radiation can reduce the field life of any electronic device. While the materials used in the bezels provide long field life, that life is improved with proper installation. UV radiation from the sun causes all plastics to fade or yellow and become brittle over time. Avoiding long-term exposure to direct sunlight helps protect the front of your product from direct exposure to UV radiation, and greatly increase its field life.

IMPORTANT The Rockwell Automation approved sun shield, Cat. No. 6189X-SUNSHIELD, must be used if your integrated display model is exposed to direct sunlight.

If you install a sun shield that closes over your integrated display, the temperature between the sun shield and the integrated display cannot exceed the maximum temperature of the integrated display, which is +55 °C (+131 °F). Adequately ventilate all sun shields to help prevent excess heat rise on the integrated display. Sun shields that close and fold over the display must maintain an air gap to adequately vent the heat coming out of the display module in high temperature environments.

Use stirring fans or active cooling in high altitude and high ambient temperature locations to keep the internal enclosure temperature below 70 °C (158 °F). Use a heater in installations where the ambient temperature is below -20 °C (-4 °F).

If possible, avoid placing your integrated display model on the south (north in the southern hemisphere) or west side of the cabinet. Proper placement reduces the heat rise due to solar loading during the hottest part of the day.

Mount your integrated display model at a 0° vertical position to minimize solar loading on the display. Do not mount your integrated display model in a sloped enclosure if it exposes your integrated display model to direct sunlight.

Hot Surfaces

IMPORTANT The Rockwell Automation approved sun shield, Cat. No. 6189X-SUNSHIELD, must be used if your integrated display model is exposed to direct sunlight.

Restricted Access Location

Verify that restricted access locations for the equipment meet these conditions:

- Access can only be gained by service personnel or by a user who has been instructed on the reasons for restrictions to a location and any precautions to be taken.
- Access can only be gained by using a tool, a lock and key, or other means of security controlled by the authority responsible for the location.

Conditions for Safe Use Apply in ATEX, UKEX, IECEx, INMETRO, and CCC

For All Integrated Display Models (Cat. No. 6181X-121PPMXDNB-3*xxxxxx*G-*xxx*(*x*))

- The equipment must only be used in an area of not more than Pollution Degree 2, as defined in EN/IEC 60664-1, as applicable to your region.
- For EPL Gc, the equipment shall be installed in a CCC (Ex)/INMETRO/ATEX/UKEX/IECEx Zone 2 (minimum) certified enclosure that provides a degree of protection not less than IP54, and is only accessible by use of a tool.
- For EPL Dc, the equipment should be installed in a CCC (Ex)/INMETRO/ATEX/UKEX/IECEx Zone 22 (minimum) certified enclosure that provides a degree of protection not less than IP64, and is only accessible by use of a tool.
- Transient protection is provided if set at a level not exceeding 140% of the peak-rated voltage value at the supply terminals to the equipment.
- Ambient temperature (external to enclosure) range is -20...+55 °C (-4...+131 °F), and that of the internal enclosure ambient temperature is -20...+70 °C (-4...+158 °F).
- The integrated display models with projective captive (PCAP) touch screens were evaluated for use with a PCIe or PCI add-in card and the 64 GB CFast accessory.
- PCIe and PCI add-in cards must be rated Zone 2 CCC (Ex)/ATEX/UKEX/IECEx/INMETRO, T4 (max), 4 W (max), 90 °C (194 °F) (min) surrounding ambient temperature.
- To maintain the IP66 rating of the equipment, mount the integrated display model in an enclosure with an equivalent IP rating.
- To minimize the risk from electrostatic discharge (ESD), only clean the display with a damp cloth.

For All Non-display Models (Cat. No. 6181X-000NWNNDNB-3*xxxxx*G-*xxx*(*x*))

- The equipment can only be used in an area of not more than Pollution Degree 2, as defined in EN/IEC 60664-1, as applicable to your region.
- The equipment must be installed in a CCC (Ex)/INMETRO/ATEX/UKEX/IECEx Zone 2 (minimum) certified enclosure that provides a degree of protection not less than IP54, and is only accessible by use of a tool.
- Transient protection is provided if set at a level not exceeding 140% of the peak-rated voltage value at the supply terminals to the equipment.
- The non-display models were evaluated for use with a PCI Express (PCIe) or PCI add-in card and the 64 GB CFast accessory.
- PCIe and PCI add-in cards must be rated Zone 2 CCC (Ex)/ATEX/UKEX/IECEx/INMETRO, T4 (maximum), 4 W (maximum), 90 °C (194 °F) (minimum) surrounding ambient temperature.
- The internal enclosure ambient temperature range is -20...+70 °C (-4...+158 °F)

Conditions for Safe Use in North American Hazardous Locations

The following statements apply to when a 6181X Series J industrial computer or 6181X Series J thin client is used in a North American hazardous location.

⚠	**WARNING: Explosion Hazard.** • Do not connect or disconnect the device or any connected peripheral equipment unless power has been switched off and the area is known to be non-hazardous. • Peripheral equipment must be suitable for the location where it is used. • In the United States, all wiring must be in accordance with Class I, Division 2 wiring methods of Article 501 of the National Electrical Code, and in accordance with the authority having jurisdiction. • In Canada, all wiring must be in accordance with Section 18-1J2 of the Canadian Electrical Code, and in accordance with the authority having jurisdiction. • In final applications, properly connect these devices to ground by using the ground terminal screw on the chassis of your industrial computer or thin client. • PCIe and PCI add-in cards must be rated Class I, Division 2, T4 (max), 4 W (max), 90 °C (194 °F) (min) surrounding ambient temperature.	⚠	**AVERTISSEMENT : Risque d'explosion.** • Ne branchez ou ne débranchez pas l'équipement ou tout équipement périphérique connecté sans vous être assuré que l'alimentation est coupée et que l'environnement est classé comme non dangereux. • Les périphériques doivent être adaptés à l'environnement dans lesquels ils sont utilisés. • Aux États-Unis, l'intégralité du câblage doit être conforme aux méthodes de câblage de Classe I, Division 2 de l'article 501 du National Electrical Code, ainsi qu'aux réglementations applicables en vigueur. • Au Canada, l'intégralité du câblage doit être conforme à la section 18-1J2 du code électrique canadien, ainsi qu'aux réglementations applicables en vigueur. • Dans les applications finales, raccordez correctement ces dispositifs à la terre en utilisant la vis de borne de terre sur le châssis de votre PC industriel ou de votre client léger. • Les cartes d'extension PCIe et PCI doivent être classées 4 W (maximum) et de Classe I, Division 2, T4 (maximum), 90 °C (194 °F) (minimum) à la température ambiante environnante.

Installation Requirements

System Design Requirements: Integrated Display Models

End user access is limited to the front of the industrial computer or thin client, which includes the integrated display and the touch screen.

⚠	**WARNING: Risk of death, serious injury, or equipment damage.** If the integrated screen darkens or if the backlight is not functioning properly, the integrated screen can be difficult to read and use of this screen could result in a potentially hazardous outcome. System design must take into account that the integrated screen or LCD touch screen can lose functionality and therefore be unable to maintain or change control of the system. The touch screen cannot be the single point of control of critical functions and is not intended to replace an E-stop. System design must follow all applicable code and good engineering practice. Factors to consider include the following: • The possibility of an unreadable LCD screen. • The possibility of an inoperable touch screen. • Operator error in the control of the system. • Proper use of E-stops and other safety practices. • Unexpected communication errors or delays. You must provide means to achieve a safe state during anomalies and help ensure that the system has adequate redundancy for critical functions. • Failure to follow these instructions can result in death, serious injury, or equipment damage.	⚠	**AVERTISSEMENT : Risque de mort, de blessures graves ou de dégâts matériels.** Si l'écran intégré s'assombrit ou si le rétro-éclairage ne fonctionne pas correctement, il peut être difficile de lire l'écran intégré et son utilisation peut provoquer des risques potentiels. La conception du système doit prendre en compte le fait que l'écran intégré ou la dalle tactile LCD peut perdre sa fonctionnalité et donc devenir incapable de maintenir ou de changer le contrôle du système. La dalle tactile ne doit pas être le point de contrôle unique des fonctions critiques et n'est pas conçue pour remplacer l'arrêt d'urgence. La conception du système doit suivre toutes les réglementations applicables et les bonnes pratiques en matière d'ingénierie. Facteurs à prendre en compte : • la possibilité qu'un écran LCD soit illisible ; • la possibilité qu'une dalle tactile soit inutilisable ; • une erreur de l'opérateur dans la commande du système ; • une utilisation correcte des arrêts d'urgence et autres pratiques de sécurité ; • des erreurs ou des retards de communication inattendus. Vous devez fournir les moyens d'atteindre un état sûr pendant les anomalies et aider à garantir que le système possède une redondance adéquate des fonctions critiques. • L'inobservation de ces instructions peut entraîner des blessures graves, voire mortelles, ou endommager l'équipement.

DC Power Requirements

- Both integrated display and non-display models have a DC input terminal block for connection to an 18...32V DC power source.
- Operate your industrial computer or thin client in an industrial or control room environment, which uses some form of power isolation from public low-voltage mains.
- Supply your industrial computer or thin client circuit with its own disconnect.
- Use an uninterruptible power source (UPS) to help protect against unexpected power failure or power surges.
- The DC power option supports operation from the safety extra low voltage (SELV) power source.
- Use a SELV isolated and ungrounded power supply as input power to your industrial computer or thin client. This power source provides protection so that under normal and single fault conditions, the voltage between the conductors and Functional Earth/Protective Earth does not exceed a safe value.
- The power supply is internally protected against reverse polarity.
- Required for EMC compliance: A functional ground connection is required.
- The DC power wires must meet the requirements that are listed in Table 2.

Table 2 - DC Power Wire Requirements

Attribute	Requirements
Wire Material	Stranded Copper, Insulation 90 °C (194 °F) minimum
Wire Gauge	To Connect to DC Input Terminal Block: 0.823...2.08 mm^2 (18...14 AWG)
	To Connect to Earth Ground: 1.5 mm^2 (16 AWG) or larger [(1)]

Attribute	Requirements
Wire Temperature Rating	76 °C (169 °F) minimum
Torque Values	For DC Input Terminal Block Screws: 1.36 N•m (12 lb•in)
	For Functional Ground Screw: 1.47 N•m (13 lb•in)

(1) Use a ground wire with an insulation color allowed by your local inspection authority.

Installation Site Requirements

Follow these requirements to make sure that your industrial computer or thin client provides service with excellent reliability.

Table 3 - Environment Specifications

Model Type	Enclosure Ratings	Temperature [°C (°F)]	Relative Humidity	Altitude	Shock	Vibration
Integrated Display	Rated for UL Type1. 4, 4X, 12, 13 and classified by UL in accordance with IEC 60529, IP66 when properly mounted on a flat surface of an equivalent-type enclosure.	Operating: Display Side: -20...+55 (-4...+131) Back Side: -20...+70 (-4...+158) Nonoperating: -30...+80 (-22...+176)	10...90% without condensation	Operating: 2000 m (6561 ft) Nonoperating: 12,000 m (40,000 ft)	Operating: 15 g's (1/2 sine, 11 ms) Nonoperating: 30 g's (1/2 sine, 11 ms)	0.012 in p-p (10...57 Hz); 2 g peak (57...640 Hz)
Non-display	–	Operating: -20...+70 (-4...+158) Nonoperating: -30...+80 (-22...+176)				

- The installation site must have sufficient power.
- In dry environments, static charges can build up easily. Proper grounding of your industrial computer or thin client helps to reduce static discharges, which can cause shock and damage electronic components.
- The enclosure or cover must always remain in place during operation. The cover provides protection against high voltages inside your industrial computer or thin client and inhibits radio frequency (RF) emissions that can interfere with other equipment.
- The minimum required enclosure size (H x W x D) is:
  403 x 497 x 154 mm (15.87 x 19.57 x 6.06 in.).
- Never allow air passages to become obstructed. Allow sufficient space around air inlets and outlets to provide the circulation necessary for cooling.
- The ambient air temperature must not exceed the maximum operating temperature in Table 3 and must avoid condensation. Consider a user-supplied fan, heat exchanger, or air conditioner for heat generated by other devices in the enclosure.

The temperature at the top of the enclosure is often higher than the temperature in other parts of the enclosure, which is likely if air is not circulating.

Enclosure Requirements

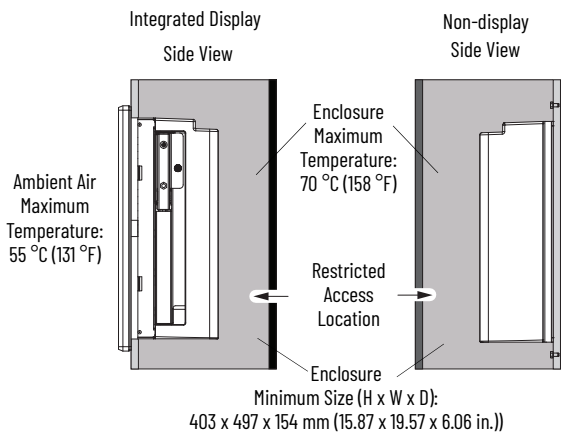

IMPORTANT Your industrial computer or thin client can operate at a range of extremes. If it continuously operates at its highest rated temperature, then the life span and its components (including the touch screen and LCD panel) are shortened.

- The relative humidity of the ambient air must not exceed the limits that are specified in Table 3 and must avoid condensation.

Prepare for Installation

Follow these steps to prepare for installation of your product.

Unpack Your Product

IMPORTANT Before you unpack your industrial computer or thin client, inspect the shipping carton for damage. If damage is visible, immediately contact the shipper and request assistance. Otherwise, continue to unpack your industrial computer or thin client.

Keep the original packing material including the inner and outer packing cartons, in case you must return your product for service, lithium battery replacement, or transport to another location.

6181X Series J industrial computers and 6181X Series J thin clients ship with these items:

Model	Items	
Integrated Display	• Mounting clips, quantity of 10 [(1)]	• Cutout template, publication 6181P-DS002
Non-display	• Screws with grommets, quantity of 4	
All Models	• Product test report	• This publication

(1) Replacement mounting clips, Cat. No. 6189X-MCLIPS, are available. See publication 6181X-PC002 for product information.

Required Tools

These tools are required to mount and install your industrial computer or thin client:

Model	Required Tools		
Integrated Display	• Cutout tools appropriate for panel material	• Scissors for cutout template	• Low-tack masking tape
Non-display	• For panel mount installation: cutout tools appropriate for wall material	• For book mount installation: book mount bracket, Cat. No. 6189V-BOOKBRKT (see publication 6181X-PC002)	• Drill, drill bit, and M4 screw tap
All Models	• #2 cross-head screwdriver • Tape measure	• Level, square, and marking tool • Anti-static wriststrap	• Torque limiting screwdriver • Assorted cables

Add Accessories (Optional)

To ease the installation process, add these accessories before you proceed to mount, connect power, and connect peripheral cables to your industrial computer or thin client: CompactFlash (CFast) card, PCI riser card, DDR4 SC-DIMM RAM memory modules, and solid-state drive (SSD). For a complete list of accessories and proper installation, see publication 6181X-PC002.

Mount Your Product

Follow all mounting requirements and mounting steps to secure your integrated display model to a panel or non-display model to a wall.

Panel Mount — Integrated Display Models

Mounting Requirements

Figure 1 - Mounting Requirements: Integrated Display Models - Panel Mount

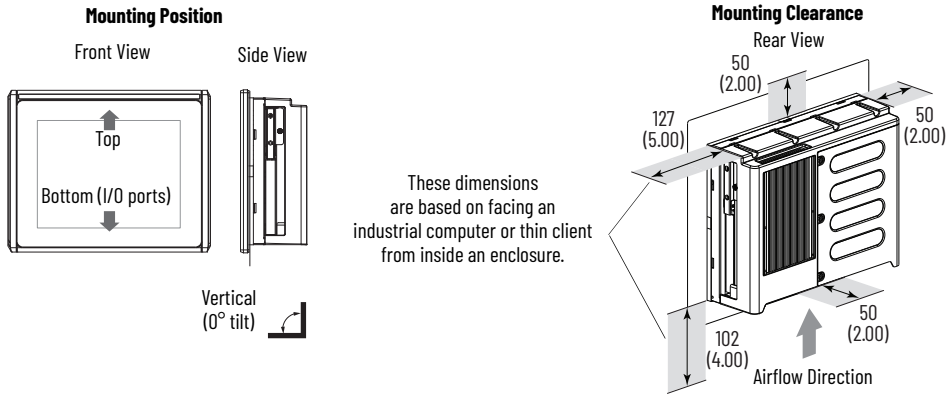

Mounting Position

- When mounted, your integrated display model:
  - cannot be tilted from 0° vertical position (see Figure 1).
  - must be mounted on a horizontal surface.
- Choose an ergonomic height suitable for the end user.

Mounting Clearance

- Do not operate your integrated display model in an enclosure with minimum clearances (see Figure 1) unless adequate ventilation or other methods are used to lower the temperature within the enclosure.
- Allow for minimum clearances to accommodate future installation or removal of peripheral components (such as internal hard drives) and peripheral cables.
- Be sure that there is adequate space behind the panel.

Cutout Requirements

- Remove all electrical power from the panel before making the cutout.
- Cut the supporting panels to specifications before installation.
- Take precautions so debris does not enter components that are already installed in the panel.
- Support panels must be at least 16 gauge for proper sealing against water and dust, and to provide proper support.
  - The supplied mounting hardware accommodates 16...6 gauge or 1.6...6 mm (0.064...0.24 in.) support panel thickness.
- Make sure that the area around the panel cutout is clear.
- The cutout template (provided) must be used to prepare the panel cutout.

  You can download and print the cutout template, publication 6181P-DS002, from rok.auto/literature.

  - For planning purposes only: The approximate dimensions [mm) in.)] for the panel cutout (H x W) is: 254 x 324 (10 x 12.76)

Step A: Create the Panel Cutout

Follow these steps to create the panel cutout.

1. Remove all electrical power from the panel.
2. Use a scissors to cut the cutout template (provided) to your specific integrated display model indicated on the cutout template itself.
3. Affix the prepared cutout template against the panel at the preferred height and squarely positioned.
4. Use cutting tools appropriate for the panel material, cut an opening in the panel by using the appropriate panel cutout dimensions.
5. Remove the cutout template and the cut panel material.
6. Clean the area of material debris.

Step B: Secure to the Panel

Figure 2 - Mounting Clip Attachment

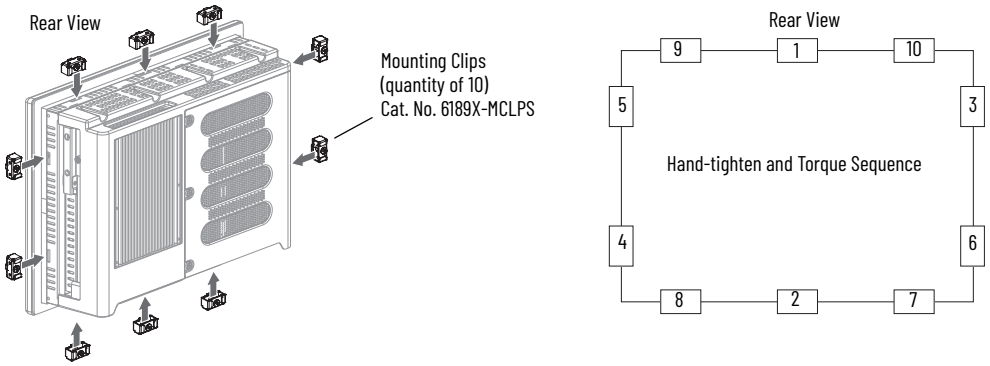

1. Make sure that the sealing gasket is properly positioned on your industrial computer or thin client.

IMPORTANT Do not use a sealing compound on the gasket. By design, the gasket forms a compression-type seal.

2. Place your industrial computer or thin client in the panel cutout.
3. Slide the 10 mounting clips (provided) into the holes on the top, bottom, and sides of your industrial computer or thin client as shown in Figure 2.
4. Hand-tighten the clips around the bezel in the sequence shown in Figure 2.
5. Repeat step 4 at least three more times until the mounting clips are hand-tight and the gasket is compressed uniformly against the panel.
6. Use a torque limiting screwdriver to tighten the mounting clips to a torque of 1.35 N•m (12 lb•in) according to the sequence shown in Figure 2.
7. Repeat step 6 at least three more times until the mounting clips are properly torqued and be sure that the gasket is compressed uniformly against the panel.

IMPORTANT Do not overtighten the mounting clips. Overtightening causes damage to the gasket. Tighten the mounting clips to the specified torque to provide a proper seal to help prevent water or chemical damage to your industrial computer or thin client. Rockwell Automation assumes no responsibility for water or chemical damage to your industrial computer or thin client and any other equipment within the enclosure because of improper installation.

Wall Mount — Non-display Models

Your non-display model can be mounted vertically at a 0° tilt directly to a wall, such as a steel panel in an enclosure or equipment room.

A book mount bracket, Cat. No. 6189V-BOOKBRKT, can be purchased separately if a book mount installation is preferred. For book mount installation, complete the steps in the Accessories for Industrial Computers and Thin Clients for Hazardous Locations, Series J Product Information, publication 6181X-PC002.

Mounting Requirements

Mounting Position

- As shown, when mounted your non-display model cannot be tilted from 0° vertical and cannot be mounted on a horizontal surface.
- Choose an ergonomic height suitable for the end user.

Mounting Clearance

- As shown, allow for minimum clearances and space behind the cutout in the wall to accommodate adequate airflow, future installation, or removal of peripheral components (such as internal hard drives) and peripheral cables.

Cutout Requirements

- Remove all electrical power from the panel before making the cutout.
- Take precautions to protect the components that are already installed in the panel so debris does not enter when cutting the panel material.
- Make sure that the area around the panel cutout is clear.
- See the approximate dimensions in Figure 3 on page 13 to plan the position of your non-display industrial computer or thin client.

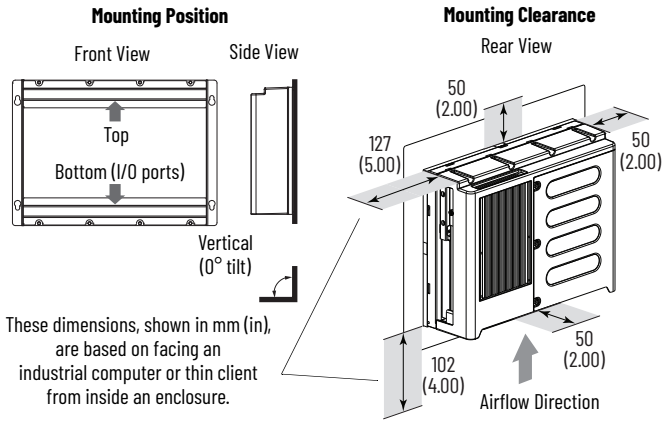

Step A: Secure to the Wall

1. Lift your non-display model in the desired position the wall.
2. Check that your non-display model is level and square.
3. Mark the locations of the four mounting holes of your non-display model.
4. Verify that the marked locations are level and square.
5. Set your non-display model aside.
6. Drill a hole at each marked location to accommodate four M4 panhead screws (supplied).
7. Align your non-display model with the four mounting holes that are created in step 4.
8. Attach the four M4 panhead supplied screws with grommets according to the sequence shown at right.
9. Tighten the M4 panhead screws with grommets in the same sequence to a torque that is appropriate for the screw and wall material.

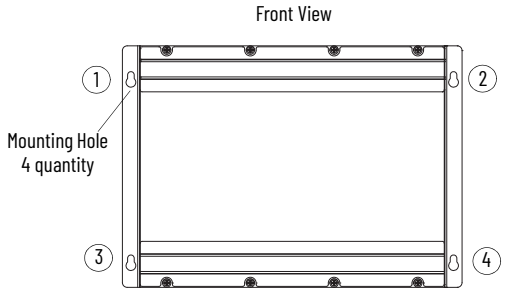

If your non-display model is attached to steel material, the recommended torque of the M4 panhead screws with grommets is 1.13...1.36 N•m (10...12 lb•in).

Connect Your Product

Follow the steps below to connect your product.

Connect Peripheral Cables

IMPORTANT To comply with EN 55035 and EN 55032, select cables with the required attribute that is listed in Table 4 on page 13.
For detailed requirements, see European Union Directive/United Kingdom Regulations on page 3.

1. Attach a CAT5 or better twisted-pair Ethernet cable with RJ45 connectors to the LAN port.

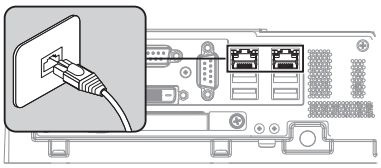

ARC FLASH HAZARD: When you connect the LAN cable, make sure that:
(1) the cable is fully inserted in the LAN port and (2) the latch is engaged.
Failure to verify this connection could result in an electric arc that can cause an explosion in a hazardous location.

RISQUE D'ARC ÉLECTRIQUE : Lorsque vous branchez le câble LAN, assurez-vous que :
(1) le câble est complètement inséré dans le port LAN et (2) le loquet est bien enclenché.
Le non-respect de cette consigne peut provoquer un arc électrique susceptible d'entraîner une explosion dans un environnement dangereux.

IMPORTANT To help prevent performance degradation of Ethernet communication, do not subject your industrial computer or thin client and peripheral cables to extreme radiation or conducted high-frequency noise.
In industrial environments, proper cable routing and power conditioning are required for Ethernet communication. Rockwell Automation recommends that you route all Ethernet cable through dedicated metal conduits. For improved performance reliability, install ferrite bead filters at the cable ends.

2. Attach all other peripheral cables to your industrial computer or thin client. See Table 4 on page 13 for I/O port locations.
3. Attach the unattached end of the peripheral cables to the appropriate component in your schema.

Connect Power

Follow these steps to connect your industrial computer or thin client to a DC power source.

1. Before you proceed, be sure that all requirements have been met in DC Power Requirements on page 6 and Table 2 on page 7.
2. Turn off the main power switch or breaker.
3. Secure the DC power wires to the terminal block by tightening the terminal block screws to the torque value listed in Table 2 on page 7.

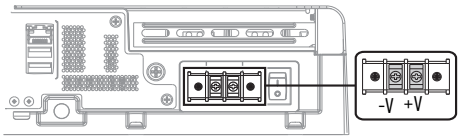

4. Use a ring connector to secure the ground wire to the functional ground screw.

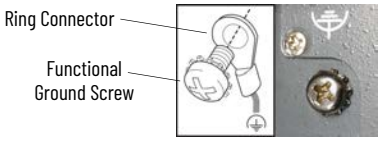

5. Tighten the functional ground screw to your industrial computer or thin client at the torque value that is listed in the table in Table 2 on page 7.

IMPORTANT When using the functional ground screw, connect your industrial computer or thin client to earth ground by using the wire gauge listed in Table 2 on page 7.

Complete the Installation

1. For integrated display models: If the integrated display will be exposed to direct sunlight, install the sun shield (6189X-SUNSHIELD) as instructed in Accessories for Industrial Computers and Thin Clients for Hazardous Locations, Series J, Series J Product Information, publication 6181X-PC002.

IMPORTANT
- The temperature between the sun shield and the display cannot exceed the maximum temperature of the display, which is 55 °C (131 °F).
- Adequately ventilate the sun shield to help prevent excess heat rise on the integrated display.

2. Apply 18...32V DC power to your industrial computer or thin client.
   When power is connected for the first time and power is supplied to the DC terminal block, the default BIOS settings initiate.

   The power switch should only be pressed after a shut down is performed.

3. If Microsoft Windows® 10 Internet of Things (IoT) Enterprise 2021 LTSC (64 bit) was factory installed: Read and accept the end user setup procedure.

IMPORTANT Do not disconnect power from the system until after the Microsoft Windows setup procedure is completed.
If power is disconnected during the setup procedure your system image can become corrupt.

Technical Specifications

Options Summary

This table summarizes the options that are available for industrial computers and thin clients for hazardous locations, series J.

The code '*X*' indicates any alpha/alpha-numeric value.

6181X	-	121	P	P	M	X	D	N	B	-	3	B	B	W21	T	G	–	N	1	S	
		a	b	c	d	e	f	g	h		i	j	k	l	m	n		o	p	q	r

a	
Display Size	
Code	**Description**
000	No display
121	12.1 inch display

b	
Bezel Type	
Code	**Description**
N	No display
P	PCAP

c	
Mount Type	
Code	**Description**
P	Panel Mount
W	Wall Mount

d	
Display Size	
Code	**Description**
M	Multi-touch PCAP
N	No Touch

e	
Resolution	
Code	**Description**
N	No display
X	4:3 1024 x 768

f	
Power Input	
Code	**Description**
D	24V DC isolated, no UPS

g	
Fan / Fanless	
Code	**Description**
N	Fanless

h	
System Configuration	
Code	**Description**
B	1 x PCIe or 1 x PCI

i	
CPU Class	
Code	**Description**
3	Intel® Core™ i3

j	
RAM Capacity	
Code	**Description**
A	16 GB
B	32 GB
C	64 GB

k	
Storage Type SSD 2.5 in.	
Code	**Description**
B	256 GB
C	512 GB
D	1 TB
N	None

l	
Operating System (OS)	
Code	**Description**
NNN	None
W21	Microsoft Windows 10 IoT Enterprise 2021 LTSC (64 bit)

m	
Trusted® Platform Module (TPM)	
Code	**Description**
F	fTPM (FW TPM)
N	No TPM
T	TPM (HW TPM Chip)

n	
Riser Card Type	
Code	**Description**
G	1 PCIe x 1 installed

o	
Software	
Code	**Description**
N	None
X	Custom or future software, preloaded

p	
Warranty	
Code	**Description**
1	Standard
X	Custom or future warranty

q	
Branding	
Code	**Description**
S	Standard A-B branding

r	
Coating	
Code	**Description**
empty	No conformal coating

Initial Preferred Catalog Numbers

Non-preferred catalog numbers will have a minimum quantity order of 6 pieces.

Product	Catalog Number	Model	Description
Industrial Computer	6181X-000NWNNDNB-3ABW21FG-N1S	Non-display	Box PC, Intel Core i3 processor, 16 GB RAM, 256 GB solid-state drive (SSD), Firmware Trusted Platform Module (fTPM) DC power, Windows 10 IoT Enterprise 2021 LTSC operating system (OS), without Rockwell Automation software bundle
	6181X-121PPMXDNB-3ABW21FG-N1S	Integrated Display	12.1 inch integrated display panel PC with projective captive (PCAP) multi-touch screen, aluminum bezel, Intel Core i3, 16 GB RAM, 256 GB SSD, fTPM, DC power, Windows 10 IoT Enterprise 2021 LTSC, without Rockwell Automation software bundle
Thin Client	6181X-000NWNNDNB-3ANNNNFG-N1S	Non-display	Box thin client, Intel Core i3 processor, 16 GB RAM, fTPM, DC power, without SSD, without OS, without Rockwell Automation software bundle
	6181X-121PPMXDNB-3ANNNNFG-N1S	Integrated Display	12.1 inch integrated display panel thin client, PCAP multi-touch touch screen, aluminum bezel, Intel Core i3 processor, 16 GB RAM, fTPM, DC power, without SSD, without OS, without Rockwell Automation software bundle

General Specifications

The dimensions in Figure 3 are shown in millimeters (inches). Dimensions are not intended to be used for manufacturing purposes.

Figure 3 - Approximate Dimensions [mm (in.)]

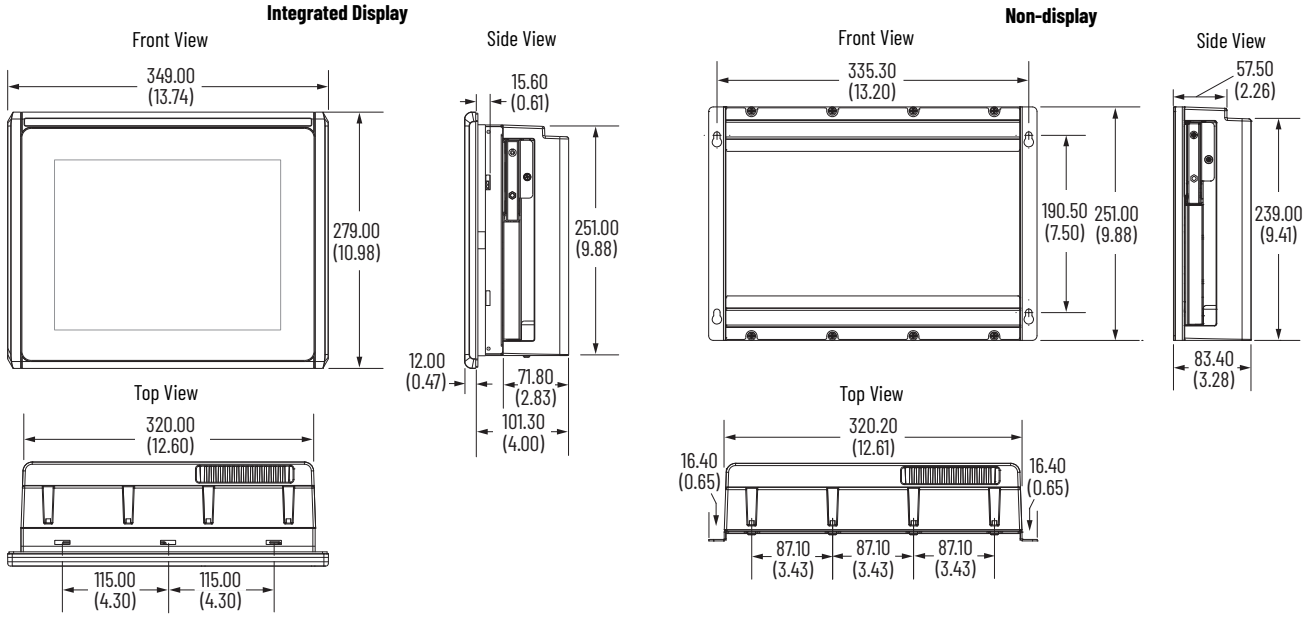

Although an integrated display model is illustrated in Table 4, the hardware features are also applicable to non-display models except for Note No. 1.

Table 4 - Hardware Features, I/O Port Locations, and Cable Requirements

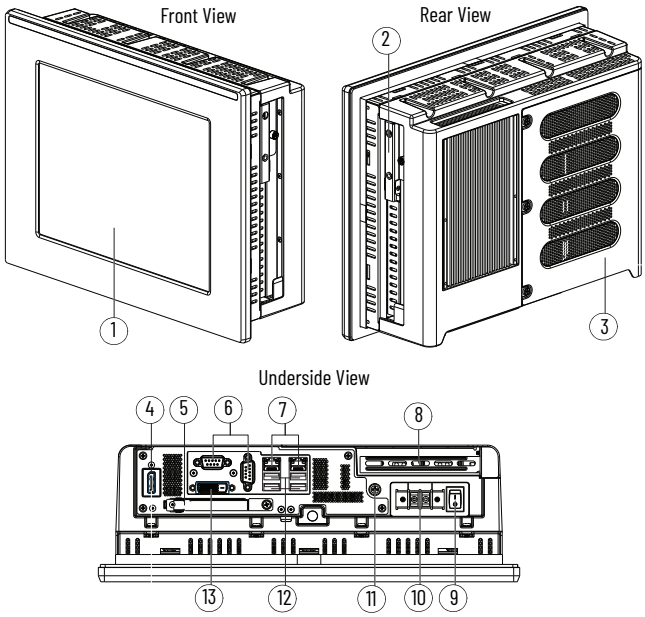

Hardware Features		
Note No.	**Component**	
1	LCD panel — integrated display models only	
2	Solid-state drive (SSD)	
3	Rear cover	
I/O Ports		
Note No.	**Component**	**Required Cable Attribute**
4	DisplayPort (1)	Shielded
5	CFast card slot	—
6	Serial COM ports (RS-232), quantity of 2	Shielded
7	1 GB LAN ports (RJ45), quantity of 2	Shielded or Unshielded
8	PCIe riser slot cover	—
9	Power switch	—
10	DC input terminal block	Unshielded
11	Functional ground (earth) screw	—
12	USB 3.0 ports, quantity of 4 (2)	Shielded
13	DVI-D port	Shielded

(1) For all models: The DisplayPort supports DP V1.4 and a daisy-chain configuration for up to six monitors in FHD (1920x1080 resolution or 1080p resolution).
For thin client models: ThinManager® or other thin client software must support a daisy-chain configuration for up to six monitors in FHD (1920x1080 resolution or 1080p resolution).

(2) For hazardous locations: The USB 3.0 ports are not hot swappable. Only connect a high-quality, shielded USB 3.0 cable with a retention feature.
For non-hazardous locations: The USB 3.0 ports are hot swappable. See Installation Precautions on page 3 for more information.

Technical Data

Table 5 - Certifications

RoHS	Turkey RoHS (EEE Yönetmeliğine Uygundur. In Conformity with the EEE Regulation)	
	Emirates Quality Mark	UAE RoHS Numero 0434B DA ISO 7000
EAC	не предназначено для применения во взрывоопасных зонах. только для общепромышленного применения.	
INMETRO	Número 0434B da ISO 7000	Para manual de instruções em português, use o seguinte link: Computadores industriais para áreas classificadas, publicação 6181X-IN003-PT-P.

Figure 4 - RoHS Disclosure

設備名稱: 工業電腦，型號: 6181X-121PPMXDNB, 6181X-000NWNNDNB
Equipment Type designation

零件名稱 Component Name	限用物質及其化學符號 Restricted substances and its chemical symbols					
	鉛 Lead (Pb)	汞 Mercury (Hg)	鎘 Cadmium (Cd)	六價鉻 Hexavalent chromium (Cr(VI))	多溴聯苯 Polybrominated Biphenyls (PBB)	多溴二苯醚 Polybrominated Diphenyl Ethers (PBDE)
顯示器 Display	—	O	O	O	O	O
電路板組件 Printed Circuit Board Assemblies	—	O	O	O	O	O
電子零件 Electrical components	—	O	O	O	O	O
金屬零件 Metal components	—	O	—	—	O	O
風扇組件 Fan Assembly	—	O	O	O	O	O
接線與電線 Wiring and Cable	—	O	O	O	O	O
電池 Battery	O	O	O	O	O	O
塑膠零件 Plastic components	O	O	O	O	O	O

備考1.〝超出0.1 wt %〞及〝超出0.01 wt %〞係指限用物質之百分比含量超出百分比含量基準值。
備考2.〝O〞係指該項限用物質之百分比含量未超出百分比含量基準值。
備考3.〝 - 〞係指該項限用物質為排除項目。

Table 6 - DisplayPort Specifications

Display Resolution		Resolution Type	Max No. of Monitors Supported (Based on Display 1.4 Bandwidth)
At 60 frames per second (FPS) 10 bit	1680x1050	WSXGA (Wide Super-eXtended Graphics Array)	8
	1920x1080	1080p	6
	2560x1600	WQXGA (Wide Quad Extended Graphics Array)	3
	3840x2160	Ultra HD (High Definition), 4K	1
	4096x2160	4K x 2K	1

Table 7 - Environment Specifications

Model	Enclosure Ratings	Temperature [°C (°F)]	Relative Humidity	Altitude	Shock (1)
Integrated Display	Rated for UL Type 1. 4, 4X, 12, 13 and classified by UL in accordance with IEC 60529, IP66 when properly mounted on a flat surface of an equivalent-type enclosure.	Operating: Display Side: -20...+55 (-4...+131) Back Side: -20...+70 (-4...+158) Nonoperating: -30...+80 (-22...+176) (2)	10...90% without condensation	Operating: 2000 m (6561 ft) Nonoperating: 12,000 m (40,000 ft)	Operating: 15 g's (1/2 sine, 11 ms) Nonoperating: 30 g's (1/2 sine, 11 ms)
Non-display	—				

(1) Applies to panel-mounted integrated display and wall-mounted non-display industrial computers and thin clients.
(2) See Installation Guidelines on page 8 for more information about temperature guidelines.

Table 8 - High Bright Integrated Display Specification, 6181X-121PPMXDNB-3xxxxxxG-xxx(x)

Attribute	Specification
Display Type	active matrix color Thin Film Transistor (TFT)
Touch Screen	PCAP chemically strengthened glass with matte finish to help reduce glare
	supports 10-point multi-touch operation
Display Size, Diagonal	308 mm (12.1 in.)

Attribute	Specification
Luminance	1300 cd/m^2 (Nits)
Contrast Ratio, Typical	1000:1
Default Resolution	1024 x 768, 16.2 M colors
View Angle, Typical	176°
LED Backlight Lifetime, Typical	100,000 hours

Table 9 - Hardware and Software Specifications: Integrated Display and Non-display Models

Attribute			Specification
Hardware	Processor		Intel Core i3-1115GRE, 2.2 GHz dual core/6 MB cache/15 W
	System Memory	Type	Dual channel, DDR4 SO-DIMM
		Slots	quantity of 2
		Installed	16 GB (1 x 16 GB) to 64 GB (2 x 32 GB)
		Maximum Memory	64 GB (2 x 32 GB)
		Available Capacities (1)	2 x 16 GB (Cat. No. 6189X-32GDDR4) or 2 x 32 GB (Cat. No. 6189X-64GDDR4)
	Solid-state Drive (SSD) (2)	Capacity Installed	256 GB, 512 GB, or 1 TB
		Available Capacities (1)	256 GB (Cat. No. 6189X-256GBSSD3), 512 GB (Cat. No. 6189X-512GBSSD), 1 TB (Cat. No. 6189X-1TBSSD)
	CFast	Slot	bootable, shipped empty; hot-swappable only in a non-hazardous location
		CFast Card	64 GB (Cat. No. 6189X-64GCFAST) **IMPORTANT:** Cat. No. 6189X-64GCFAST is the only CFast card that can be installed in your industrial computer as it is approved for industrial and hazardous locations. A CFast SSD card intended for consumer products (such as digital cameras) does not have the endurance, performance, reliability, or data protection required for industrial applications (such as sudden power off). The CFast card should only be removed or installed in a non-hazardous location.
	PCI Riser		Cat. No. 6189X-PCIRISER
	Expansion Slot		1 half-length PCIe, 4 W maximum supported, 1 half-length PCI is support with the PCI riser accessory (Cat. No. 6189X-PCIRISER)
	I/O Ports	DisplayPort	quantity of 1
		DVI-D	quantity of 1
		Serial COM	quantity of 2
		USB 3.0	quantity of 4; 10 W maximum supported aggregate for all USB 3.0 ports
	Ethernet LAN		quantity of 2 LAN ports (RJ45), 1 GB each
	Real-time Clock (RTC) Battery		Lithium RTC battery **IMPORTANT:** The lithium battery can only be replaced by Rockwell Automation. Return your product in its original inner and outer packaging to Rockwell Automation for battery replacement. For return information, contact your local distributor or Rockwell Automation representative, or visit the Product and Application Support.
ThinManager©	ThinManager Ready		All models are ThinManager ready
Software	Operating System (OS)		Microsoft Windows 10 Internet of Things (IoT) Enterprise 2021 LTSC (64 bit)
	Factory System Image		To obtain a copy, access the Rockwell Automation Product Compatibility and Download Center (PCDC) at rok.auto/pcdc

(1) For ordering information and installation instructions, see Accessories for Industrial Computers for Hazardous Locations, Series J, publication 6181X-PC002.
(2) The solid-state drives are customized to accommodate the properties as follows: (a) no paging file and (b) system restore is disabled by default.

Table 10 - Physical Specifications

Model	Approximate Weight [kg (lb)]		Approximate Dimensions H x W x D [mm (in.)]	Mounting Options	Panel Cutout Dimensions H x W [mm (in.)]
	Product Only	Product with Packaging			
Integrated Display	9.40 (20.70)	12.07 (26.61)	279 x 349 x 101.2 (10.98 x 13.74 x 3.98)	Panel	254 x 324 (10.00 x 12.76)
Non-display	6.70 (14.80)	9.40 (20.70)	251 x 353 x 83.4 (7.5 x 13.20 x 3.28)	Wall	—

Table 11 - Power Specifications

Model	Input Voltage DC	Power Consumption, Maximum	Heat Dissipation (1)	Peripheral Loading, Maximum	
				PCIe Card	USB Ports
Integrated Display	18...32V DC	18...32V DC (SELV), 3.33...1.88 A, 60 W	60 W (205 BTU/h)	4 W	900 mA, 10 W maximum for all ports (2 A)
Non-display		18...32V DC (SELV), 2.50...1.41 A, 45 W	45 W (154 BTU/h)		

(1) Add-in cards and peripherals are included in the heat dissipation value.

Table 12 - Security

Model	Catalog Number	Root of Trust (RoT)
Integrated Display	6181X-121PPMXDNB-3*xxxxx***T**G-*xxx(x)*	HW (Hardware) Trusted© Platform Module (TPM) 2.0
Non-display	6181X-000NWNNDNB-3*xxxxx***T**G-*xxx(x)*	
Integrated Display	6181X-121PPMXDNB-3*xxxxx***F**G-*xxx(x)*	Preferred configuration: FW (Firmware) TPM utilizing Intel Platform Trust Technology (PTT)
Non-display	6181X-000NWNNDNB-3*xxxxx***F**G-*xxx(x)*	
Integrated Display	6181X-121PPMXDNB-3*xxxxx***N**G-*xxxx(x)*	No TPM functionality
Non-display	6181X-000NWNNDNB-3*xxxxx***N**G-*xxxx(x)*	

Additional Resources

This publication provides basic installation instructions. For more information, see the following Rockwell Automation publications at rok.auto/literature.

Resource	Description
Industrial Computers and Thin Clients for Hazardous Locations, Series J User Manual, publication 6181X-UM003	Provides an overview of the system, procedures to install, connect, operate, and troubleshoot a 6181X Series J industrial computer or thin client for hazardous locations.
Accessories for Industrial Computers for Hazardous Locations, Series J, publication 6181X-PC002	Provides a list of available accessories for 6181X Series J industrial computers and thin clients for hazardous locations and provides installation instructions for these accessories.
6181P and 6181X Integrated Display Industrial Computers Cutout Template-Standard, publication 6181P-DS002	Provides the cutout template to prepare the site to mount an integrated display industrial computer or thin client for hazardous locations.
EtherNet/IP™ Network Devices User Manual, ENET-UM006	Describes how to configure and use EtherNet/IP devices to communicate on the EtherNet/IP network.
Ethernet Reference Manual, ENET-RM002	Describes basic Ethernet concepts, infrastructure components, and infrastructure features.
Industrial Automation Wiring and Grounding Guidelines, publication 1770-4.1	Provides general guidelines for installing a Rockwell Automation® industrial system.
Product Certifications website, rok.auto/certifications	Provides declarations of conformity, certificates, and other certification details.

Waste Electrical and Electronic Equipment (WEEE)

At the end of life, this equipment should be collected separately from any unsorted municipal waste.

Rockwell Automation maintains current product environmental compliance information on its website at rok.auto/pec.

Your comments help us serve your documentation needs better. If you have any suggestions on how to improve our content, complete the form at rok.auto/docfeedback.
For technical support, visit rok.auto/support.

Rockwell Otomasyon Ticaret A.Ş. Kar Plaza İş Merkezi E Blok Kat:6 34752, İçerenköy, İstanbul, Tel: +90 (216) 5698400 EEE Yönetmeliğine Uygundur

Connect with us.

rockwellautomation.com — expanding **human possibility**®

AMERICAS: Rockwell Automation, 1201 South Second Street, Milwaukee, WI 53204-2496 USA, Tel: (1) 414.382.2000
EUROPE/MIDDLE EAST/AFRICA: Rockwell Automation NV, Pegasus Park, De Kleetlaan 12a, 1831 Diegem, Belgium, Tel: (32) 2663 0600
ASIA PACIFIC: Rockwell Automation SEA Pte Ltd, 2 Corporation Road, #04-05, Main Lobby, Corporation Place, Singapore 618494, Tel: (65) 6510 6608
UNITED KINGDOM: Rockwell Automation Ltd., Pitfield, Kiln Farm, Milton Keynes, MK11 3DR, United Kingdom, Tel: (44)(1908) 838-800

PN-702242

Publication 6181X-IN003B-EN-P - April 2024 | Supersedes Publication 6181X-IN003A-EN-P - December 2023

DIR 10007484239 (Version 01)