PowerFlex 6000 Medium Voltage Variable Frequency Drive

Catalog Number 6000G

Allen-Bradley
by ROCKWELL AUTOMATION

Installation Instructions

Original Instructions

Important User Information

Read this document and the documents listed in the additional resources section about installation, configuration, and operation of this equipment before you install, configure, operate, or maintain this product. Users are required to familiarize themselves with installation and wiring instructions in addition to requirements of all applicable codes, laws, and standards.

Activities including installation, adjustments, putting into service, use, assembly, disassembly, and maintenance are required to be carried out by suitably trained personnel in accordance with applicable code of practice.

If this equipment is used in a manner not specified by the manufacturer, the protection provided by the equipment may be impaired.

In no event will Rockwell Automation, Inc. be responsible or liable for indirect or consequential damages resulting from the use or application of this equipment.

The examples and diagrams in this manual are included solely for illustrative purposes. Because of the many variables and requirements associated with any particular installation, Rockwell Automation, Inc. cannot assume responsibility or liability for actual use based on the examples and diagrams.

No patent liability is assumed by Rockwell Automation, Inc. with respect to use of information, circuits, equipment, or software described in this manual.

Throughout this manual, when necessary, we use notes to make you aware of safety considerations.

WARNING: Identifies information about practices or circumstances that can cause an explosion in a hazardous environment, which may lead to personal injury or death, property damage, or economic loss.

ATTENTION: Identifies information about practices or circumstances that can lead to personal injury or death, property damage, or economic loss. Attentions help you identify a hazard, avoid a hazard, and recognize the consequence.

IMPORTANT Identifies information that is critical for successful application and understanding of the product.

Labels may also be on or inside the equipment to provide specific precautions.

SHOCK HAZARD: Labels may be on or inside the equipment, for example, a drive or motor, to alert people that dangerous voltage may be present.

BURN HAZARD: Labels may be on or inside the equipment, for example, a drive or motor, to alert people that surfaces may reach dangerous temperatures.

ARC FLASH HAZARD: Labels may be on or inside the equipment, for example, a motor control center, to alert people to potential Arc Flash. Arc Flash will cause severe injury or death. Wear proper Personal Protective Equipment (PPE). Follow ALL Regulatory requirements for safe work practices and for Personal Protective Equipment (PPE).

Preface

Chapter 1

Drive Mechanical Installation

Chapter 2

Drive Electrical Installation

Notes:

Introduction

This document provides procedural information for physically unloading, moving, and installing PowerFlex® 6000 medium voltage drives.

Who Should Use This Manual

This manual is intended for use by professional riggers, general contractors, electrical contractors, or plant operations personnel familiar with moving and siting heavy equipment. Specific experience with solid-state variable speed drive equipment is NOT required for this part of the installation process, but is mandatory for subsequent processes.

What Is Not in this Manual

This manual provides information specific for physically unloading and situating a PowerFlex 6000 drive. It does not include project-specific, or drive-specific topics such as:

- Dimensional Drawings and Electrical Drawings that are generated for each customer's order.
- Spare parts lists compiled for each customer's order.
- Drive-specific technical specifications.

See the following documents for additional product detail or instruction relating to PowerFlex 6000 drives:

- PowerFlex 6000 Medium Voltage Variable Frequency Drive Shipping and Handling Manual, publication 6000-IN008: instructions for shipping and handling a Medium Voltage variable frequency drive and related equipment.
- PowerFlex 6000 Medium Voltage Variable Frequency Drive User Manual, publication 6000-UM002: instructions for daily recurring drive usage, HMI, and maintenance tasks for the product's end user.
- PowerFlex 6000 Medium Voltage Variable Frequency Drive Firmware, Parameters, and Troubleshooting Manual, publication 6000-TD004: detailed information on drive features, parameters, and troubleshooting faults.

Required Supplemental Information

This manual includes generic information about the drive cabinet layout orientation and generic electrical connection information.

Review the project-specific Dimensional Drawings (DDs) and Electrical Drawings (EDs) to better understand the specific drive system cabinet orientation and wiring requirements before performing any mechanical or electrical work. Paper copies of the DDs and EDs are placed in the document/hardware box in the Isolation Transformer Cabinet before shipment. Contact the local Rockwell Automation office to obtain digital copies, if necessary.

General Precautions

ATTENTION: This drive contains ESD (Electrostatic Discharge) sensitive parts and assemblies. Static control precautions are required when installing, testing, servicing, or repairing this assembly. Component damage may result if ESD control procedures are not followed. If you are not familiar with static control procedures, reference Allen-Bradley publication 8000-4.5.2, "Guarding Against Electrostatic Damage" or any other applicable ESD protection handbook.

ATTENTION: An incorrectly applied or installed drive can result in component damage or a reduction in product life. Wiring or application errors, such as, undersizing the motor, incorrect or inadequate AC supply, or excessive ambient temperatures may result in malfunction of the system.

ATTENTION: Only personnel familiar with the PowerFlex 6000 Adjustable Speed Drive (ASD) and associated machinery should plan or implement the installation, startup, and subsequent maintenance of the system. Failure to comply may result in personal injury and/or equipment damage.

ATTENTION: Only qualified personnel with the correct PPE (Personal Protective Equipment) should service the equipment. Be sure to follow the safety procedures and local regulations to disconnect the high voltage. After waiting for 15 minutes, open the cabinet door and verify the absence of medium voltage on the input, output, and power cell terminals with a high-voltage detector that is properly rated for the line and motor voltages. All LED lights on the power cells must be off and the drive be grounded with portable grounding cables on the input and output before servicing. Failure to follow the safety procedures can result in severe injury or death.

Summary of Changes

This publication contains the following new or updated information. This list includes substantive updates only and is not intended to reflect all changes.

Topic	Page
Updated table Cable Insulation Requirements for Outgoing Motor Cables	41
Updated Important information under Power Cable Design Considerations	42

Additional Resources

These documents contain additional information concerning related products from Rockwell Automation.

Resource	Description
PowerFlex 6000 Medium Voltage Variable Frequency Drive Shipping and Handling Manual, publication 6000-IN008	Provides instructions for shipping and handling a Medium Voltage variable frequency drive and related equipment.
PowerFlex 6000 Medium Voltage Variable Frequency Drive User Manual, publication 6000-UM002	Provides instructions for daily recurring drive usage, HMI, and maintenance tasks for the product's end user.
PowerFlex 6000 Medium Voltage Variable Frequency Drive Parameter Manual, publication 6000-TD004	Provides detailed information on drive features, parameters, and troubleshooting faults.
Industrial Automation Wiring and Grounding Guidelines, publication 1770-4.1	Provides general guidelines for installing a Rockwell Automation industrial system.
Product Certifications website, rok.auto/certifications	Provides declarations of conformity, certificates, and other certification details.

You can view or download publications at rok.auto/literature. To order paper copies of technical documentation, contact your local Allen-Bradley distributor or Rockwell Automation sales representative.

Commissioning Support

After installation, Rockwell Automation is responsible for commissioning activities for the PowerFlex 6000 product line. Contact your local Rockwell Automation sales representative to arrange commissioning.

Rockwell Automation support includes, but is not limited to:

- quoting and managing product on-site startups
- quoting and managing field modification projects
- quoting and managing product training at Rockwell Automation facilities and on-site

Contractor Scope of Work

Typical scope of work by the freight company, third-party contractor and/or customer (based on ex-works Incoterms)(1):

- Load equipment on truck at a Rockwell Automation manufacturing facility and transport equipment to site
- Offload equipment from truck on-site
- Perform initial inspection(2)
- Move equipment to the final installation location
- Position the cabinet sections together as shown in Dimensional Drawing and level the cabinet lineup
- Mechanically join cabinets together
- Affix the cabinets to the floor

(1) All or part of these activities could be provided by Rockwell Automation or its representatives, based on contract Incoterms and negotiated scope of supply/services agreement. Contact the local Rockwell Automation office for further information.

(2) Customer should lead the initial inspection process.

- Install assemblies shipped loose (fan assemblies).
- Install external ductwork to exhaust heated air from control room (if necessary)
- Install power and control cabling and terminate cable connections to drive system:
  - Connect system ground cable
  - Insulation Resistance (IR) testing of incoming line and outgoing motor power cables
  - Connect incoming line and outgoing motor power cables
  - Connect control power wiring
  - Connect all external customer required control signal wiring
  - Connect electrical safety interlock control signal wiring circuit to input circuit breaker
- Connecting the power cables and control wiring between cabinets that are shipped separately[(1)]
- Complete Pre-commissioning Checklist

(1) Interconnection of power cables and low voltage control wiring bundles, between separately shipped cabinets, can be done by the contractor or Rockwell Automation. The commissioning quote from Rockwell Automation reflects this and will contain two options:
a) the base quote, reflecting the power cable and control wiring interconnection work being done by the contractor
b) the optional quote adder, reflecting the additional time and cost for Rockwell Automation to perform the power cable and control wiring interconnection work immediately before the commissioning process.

Drive Mechanical Installation

Introduction

The installation process is divided into three principal activities. The mechanical installation process described in this chapter, the electrical installation process described in Drive Electrical Installation on page 39, and the electrical interconnection process described in Drive Electrical Interconnection on page 57.

Mechanical Installation Summary

The cabinets must be arranged as shown in the Dimensional Drawing.

Follow all applicable guidelines for siting the components before continuing with these installation instructions.

There may be some variation in the process depending on the type and number of drive components in your particular installation.

Connect Shipping Splits

ATTENTION: Install the drive on a level surface (+/- 1 mm per meter [+/- 0.036 in. per 36 in.] of drive length in all directions). If necessary, use metal shims to level the cabinets before joining them; attempting to level after joining may twist or misalign the cabinets.

Connect DV/DT Filter Cabinet for A-Frame Drives

The standard A-Frame for PowerFlex 6000 drives comes fully assembled and does not require any shipping splits. However, if a DV/DT filter is included with the drive then there is one shipping split, and the drive and filter must be connected as follows:

1. Remove the M16x16 countersunk screw that secures the LV covers and grounding cover at the right side of the main drive, and the left side of the filer cabinet. Then remove the covers.
2. Arrange the sections as described in the Dimensional Drawings and move the sections together.

1. Align the cabinet side sheets together at the holes for the hardware.

Figure 1 - Align the Cabinets, A-Frame

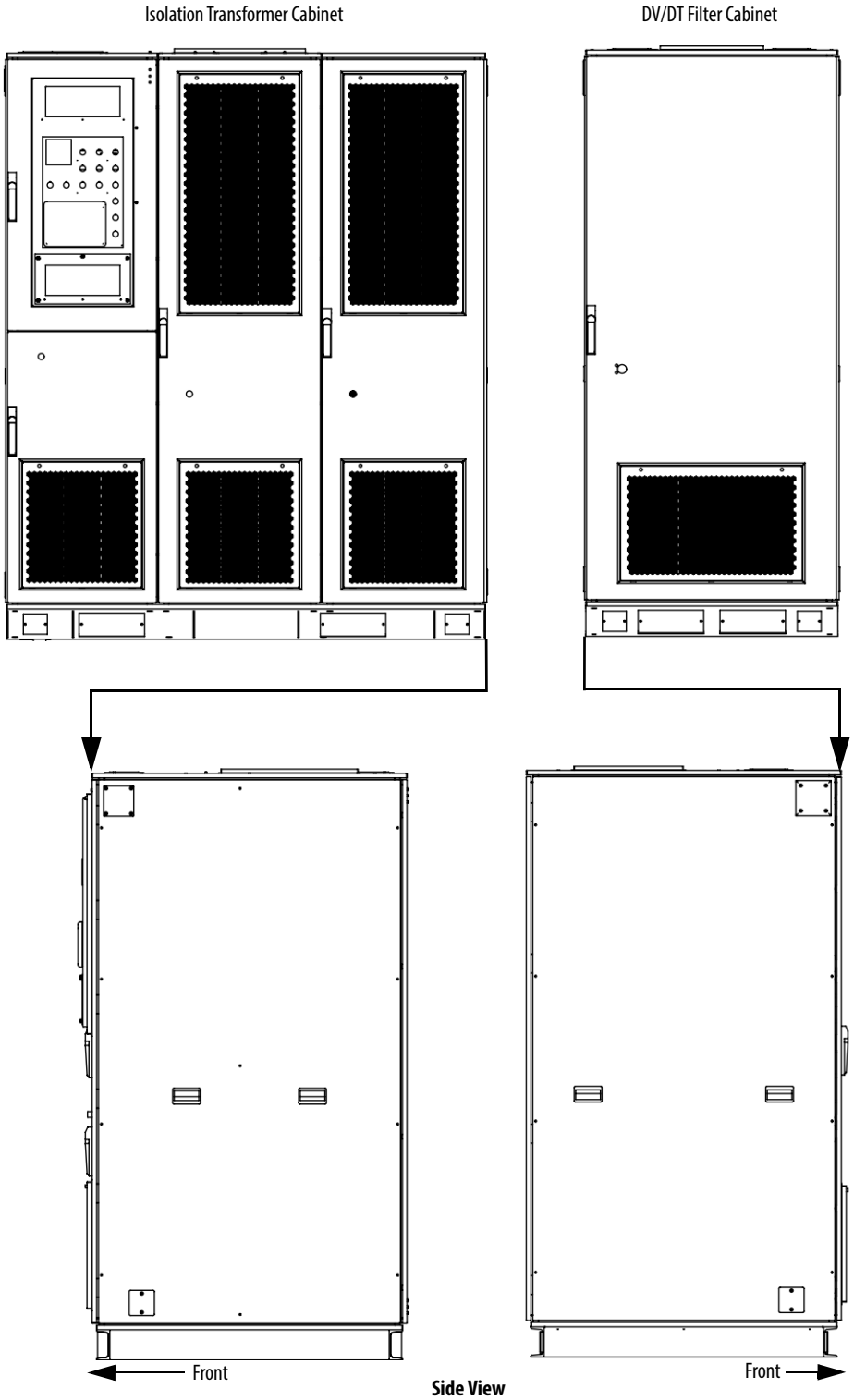

2. Secure the cabinets together using two L-shaped brackets and four M12 hexagon socket bolts, D12 washers, and D12 lock washers at the front and rear side.

Figure 2 - Secure the Cabinets, A-Frame

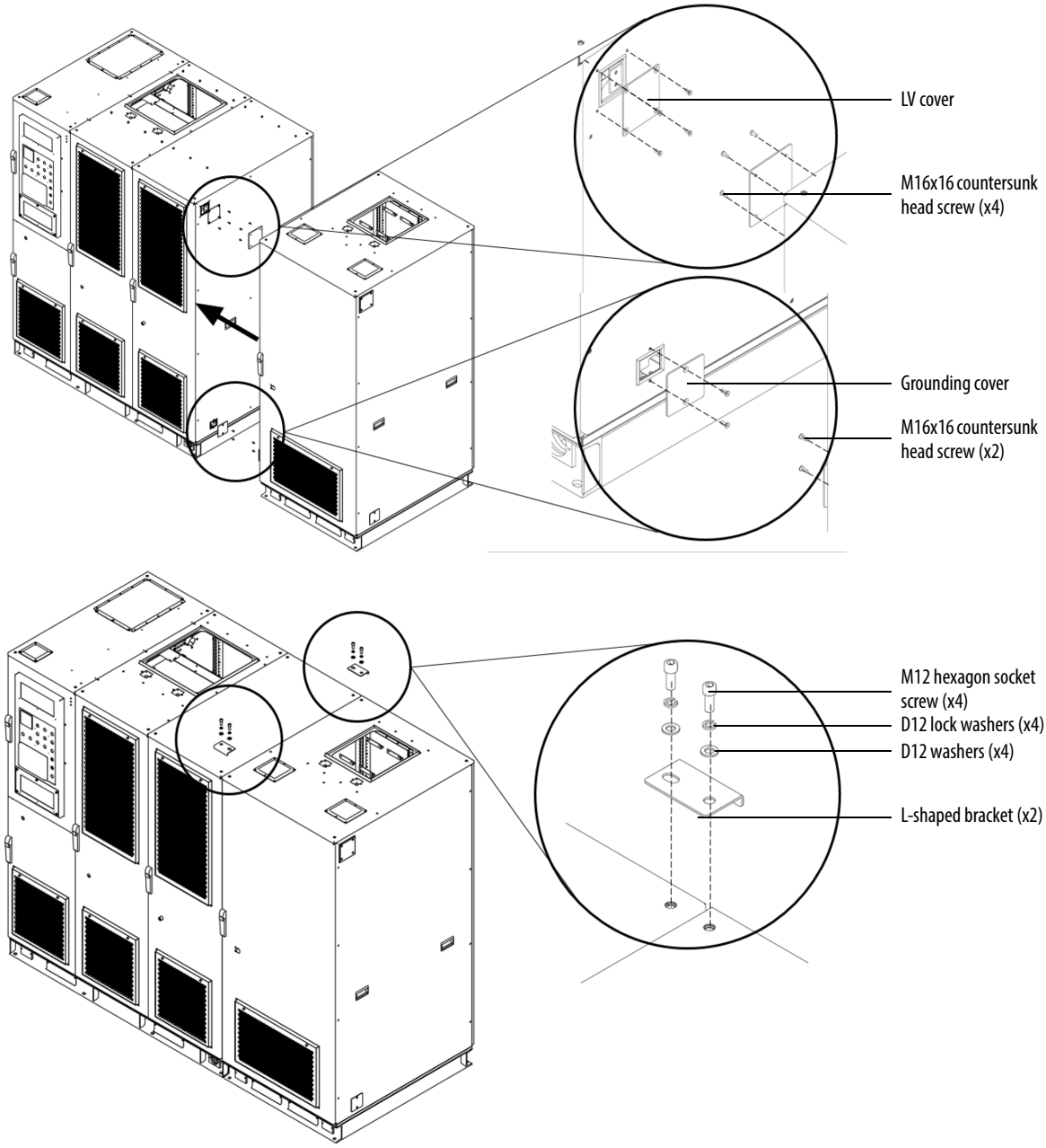

Connect Cabinets for H-Frame and B-Frame Drives

The H-Frame and B-Frame for PowerFlex 6000 drives are shipped in two sections, the Isolation Transformer Cabinet and Power Module/LV Control Cabinet. These two cabinets must be connected after located in its final position. The cabinets are connected together in 8 or 10 places (depending on the drive rating), half along the front edge of the cabinet and half along the rear edge of the cabinet. Access to the interior of the cabinet is required to make these connections. Access for the front connections requires only opening the doors. Access for the rear connections requires removing the back plates of the cabinet.

1. Arrange the sections as directed in the Dimensional Drawings and move the sections together.
2. Align the cabinet side sheets together at the holes for the hardware (see Figure 3 and Figure 4).

Figure 3 - Align the Cabinets, H-Frame (6/6.6 kV shown)

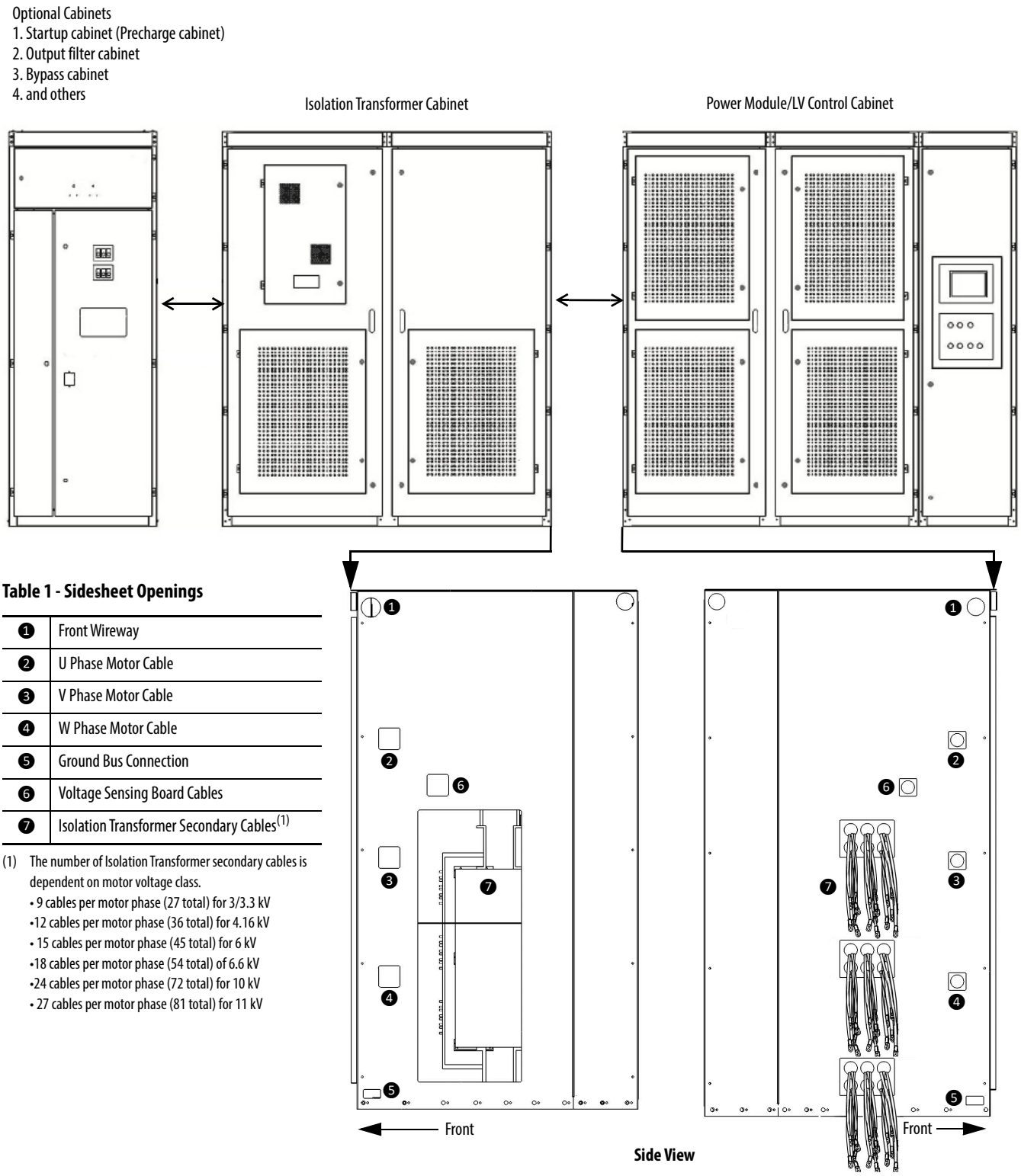

Table 1 - Sidesheet Openings

❶	Front Wireway
❷	U Phase Motor Cable
❸	V Phase Motor Cable
❹	W Phase Motor Cable
❺	Ground Bus Connection
❻	Voltage Sensing Board Cables
❼	Isolation Transformer Secondary Cables(1)

(1) The number of Isolation Transformer secondary cables is dependent on motor voltage class.
- 9 cables per motor phase (27 total) for 3/3.3 kV
- 12 cables per motor phase (36 total) for 4.16 kV
- 15 cables per motor phase (45 total) for 6 kV
- 18 cables per motor phase (54 total) of 6.6 kV
- 24 cables per motor phase (72 total) for 10 kV
- 27 cables per motor phase (81 total) for 11 kV

Figure 4 - Align the Cabinets, B-Frame (6 kV shown)

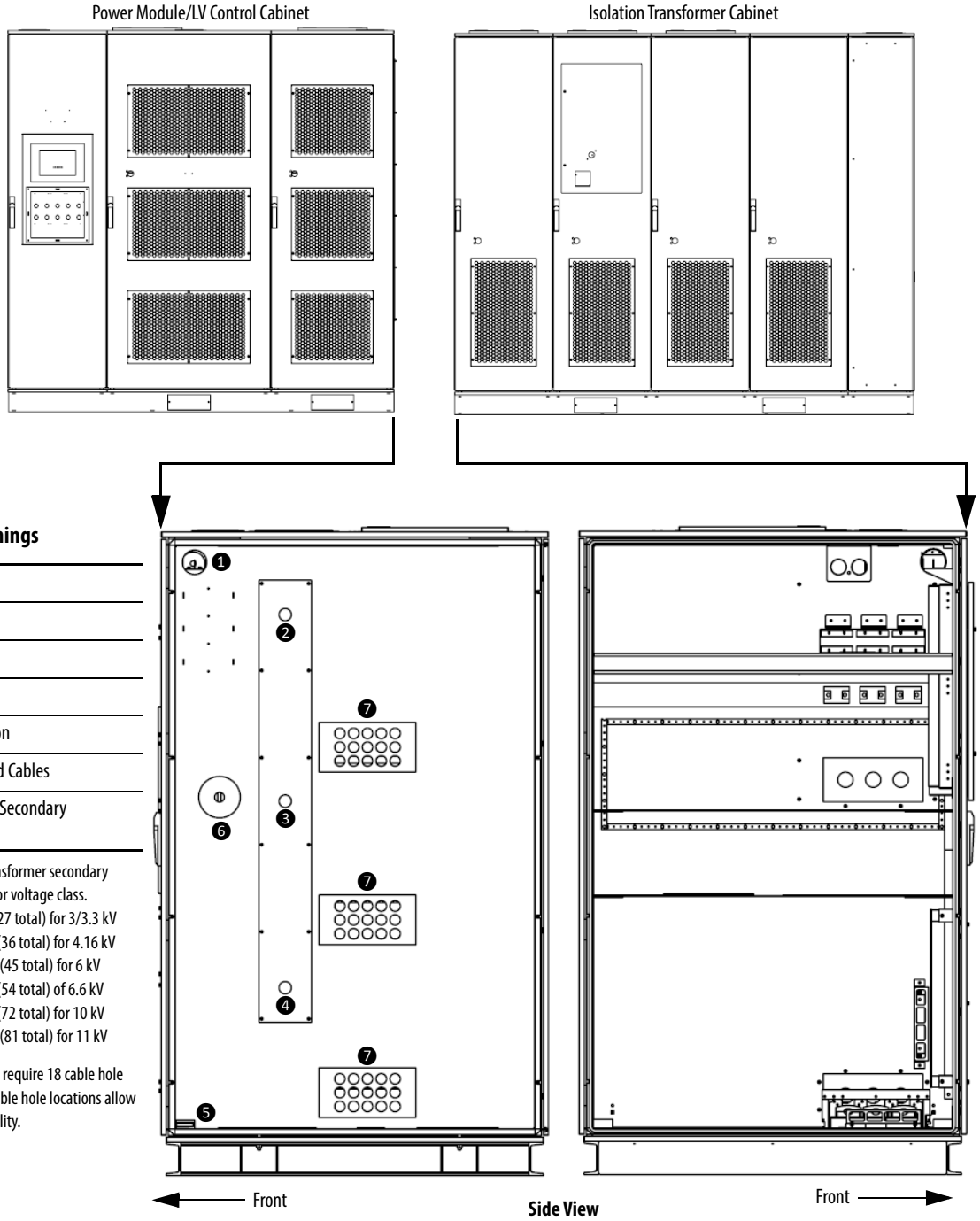

Table 2 - Sidesheet Openings

❶	Front Wireway
❷	U Phase Motor Cable
❸	V Phase Motor Cable
❹	W Phase Motor Cable
❺	Ground Bus Connection
❻	Voltage Sensing Board Cables
❼	Isolation Transformer Secondary Cables(1)(2)

(1) The number of Isolation Transformer secondary cables is dependent on motor voltage class.
- 9 cables per motor phase (27 total) for 3/3.3 kV
- 12 cables per motor phase (36 total) for 4.16 kV
- 15 cables per motor phase (45 total) for 6 kV
- 18 cables per motor phase (54 total) of 6.6 kV
- 24 cables per motor phase (72 total) for 10 kV
- 27 cables per motor phase (81 total) for 11 kV

(2) 6/6.6 kV configurations only require 18 cable hole locations per phase. Extra cable hole locations allow for added installation flexibility.

3. Secure the cabinets together using M6 or M8 hardware. See Torque Requirements on page 69 for proper torque requirements.

   Open the doors to access front edge joining holes (four or five places).

Figure 5 - Secure the Cabinets, H-Frame

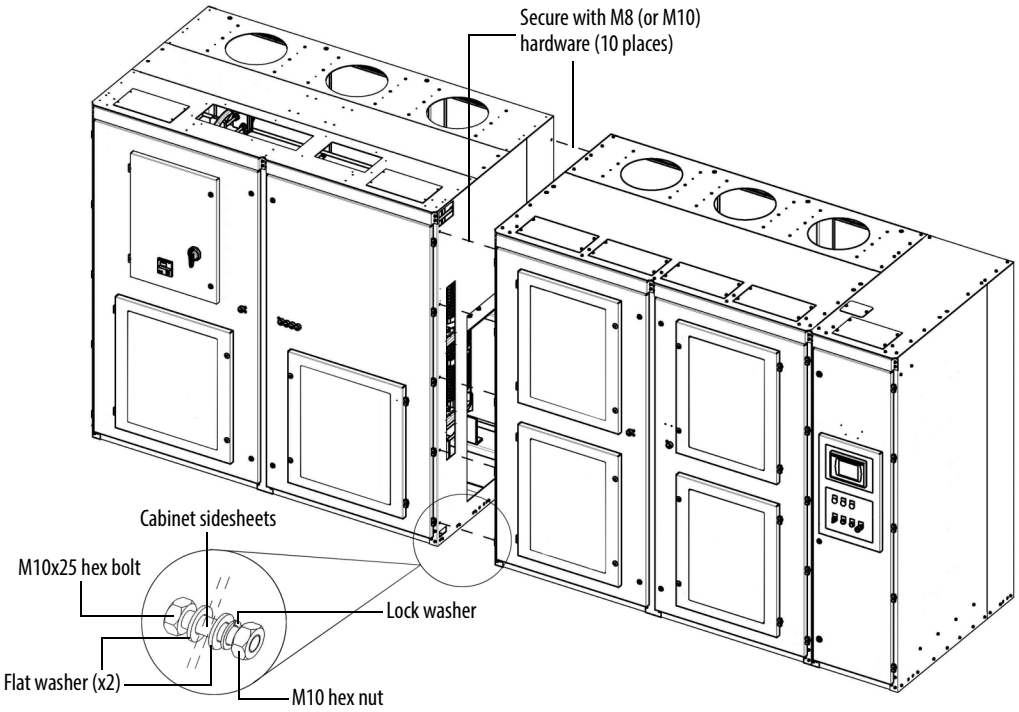

Figure 6 - Secure the Cabinets, B-Frame

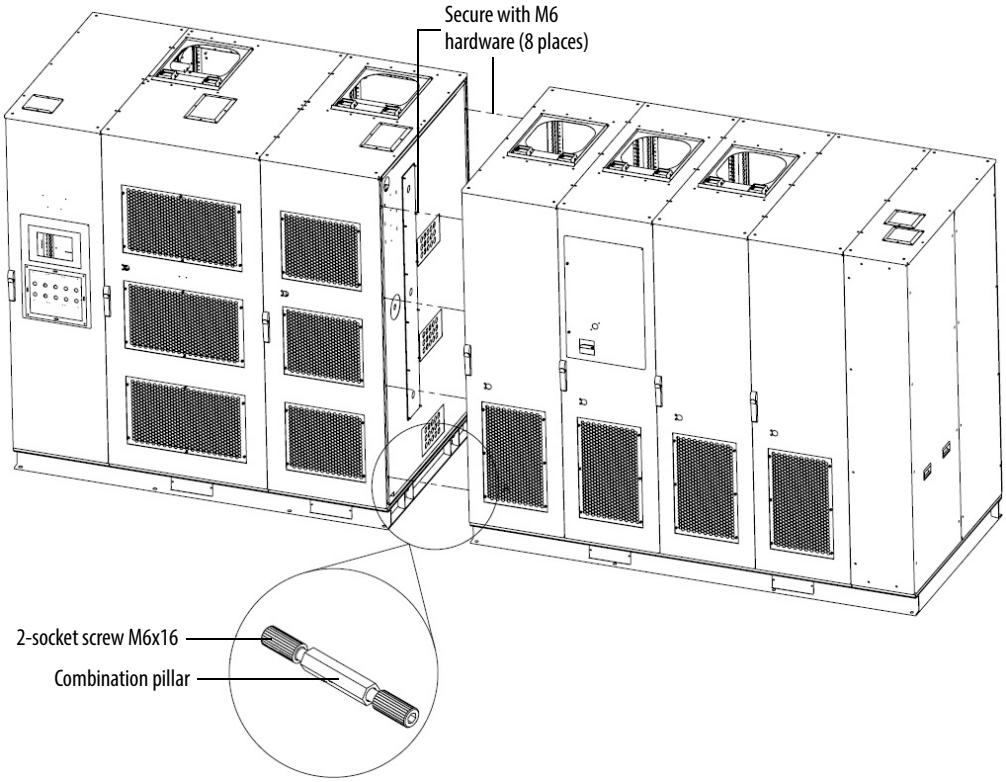

4. Remove all back plates to access rear edge joining holes (five places).

TIP Each back plate will have two keyhole screw holes on either side. Remove all other screws first. Loosen the two screws in the keyhole screw holes last and lift the back plate to remove. Do not remove these screws.

Do not replace the back plates until the Drive Electrical Interconnection Process is complete (See Drive Electrical Interconnection on page 57).

To replace the back plates, the two remaining screws orient and hold the back plate in place while fastening the other screws holding the back plates to the frame of the cabinet. Tighten these screws last to complete the process.

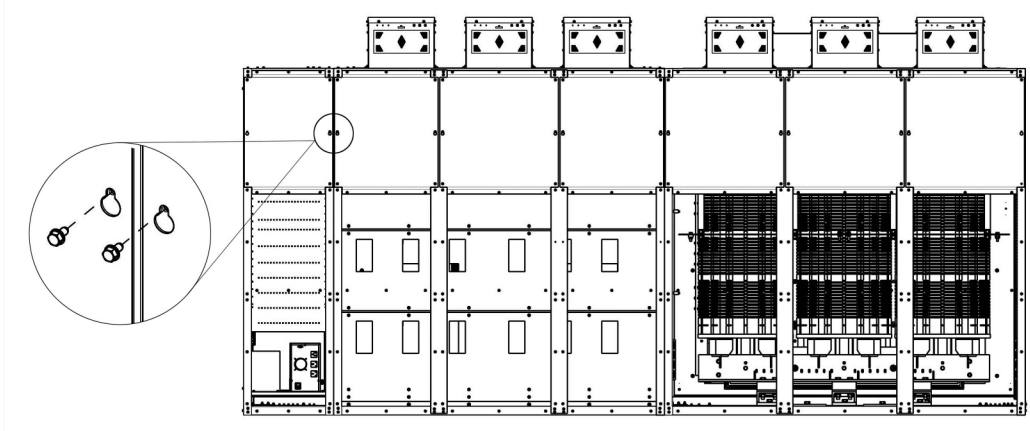

Affix Cabinets to Floor

Typical floor drawings show minimum clearance distance, conduit openings, and mounting holes for anchor bolts[(1)], as shown in Figure 7. See customer-specific dimensional drawing for outgoing motor and incoming line cable openings.

Figure 7 - Typical Floor Drawing, H-Frame

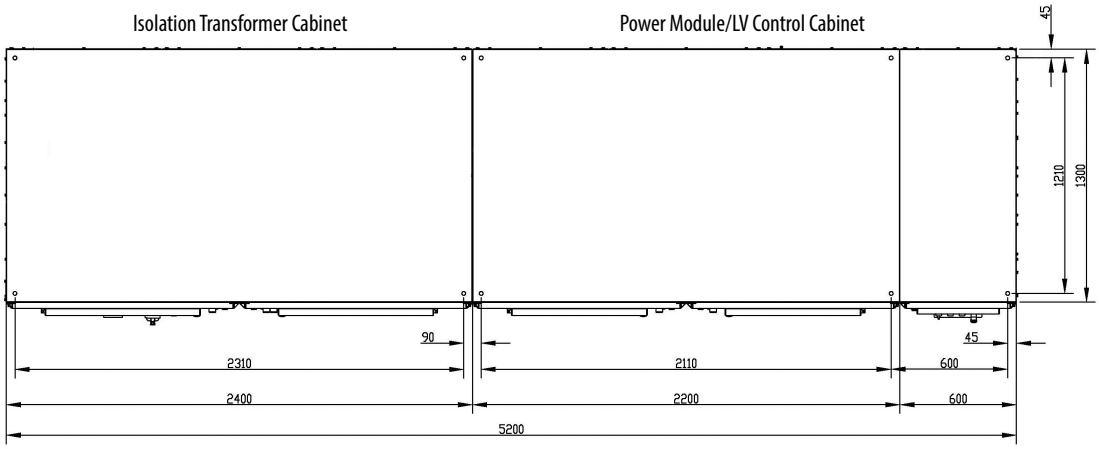

Bottom View

Secure the cabinet to the channel steel base using M16 bolt, lock washer, two flat washers, and a nut.

(1) Mounting holes are represented as + in Figure 7.

Figure 8 - Typical Floor Drawing, B-Frame

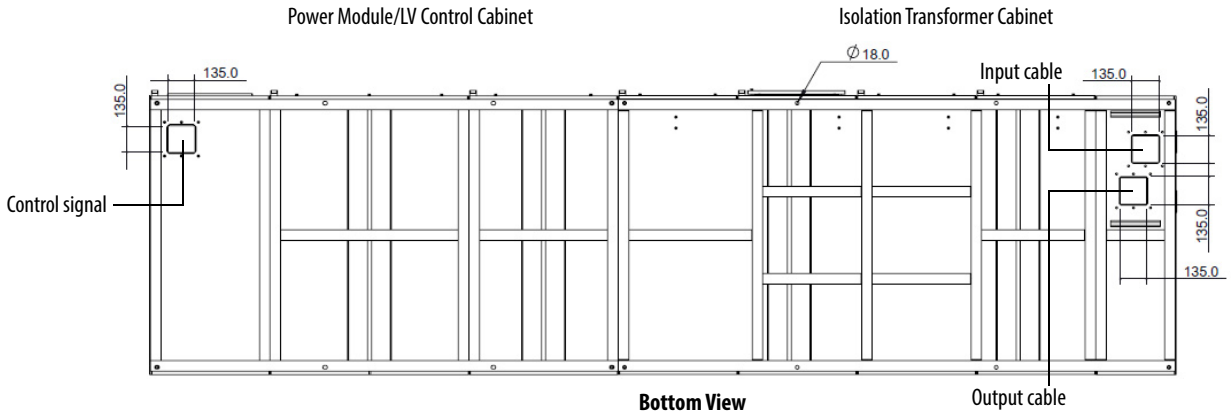

Secure the cabinet to the channel steel base using M12 bolt (recommended), lock washer, two flat washers, and a nut.

Figure 9 - Bolt Cabinet to Steel Base, H-Frame

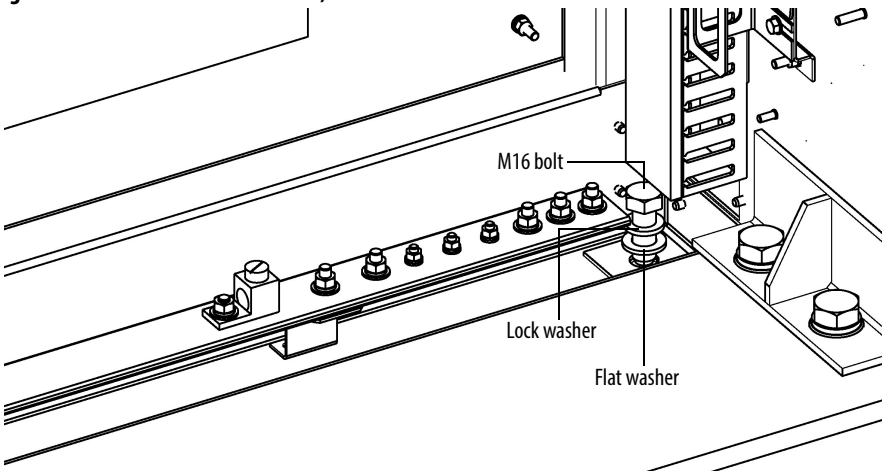

Figure 10 - Bolt Cabinet to Steel Base, B-Frame

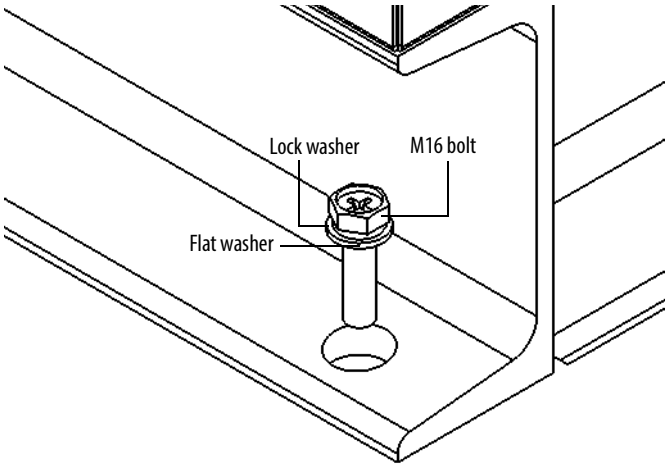

Optional: The cabinet can also be welded to the steel base once it is securely bolted, if desired.

Each weld location should be 100 mm (3.9 in.) for every 1000 mm (39.4 in.). See Mounting Requirements in the PowerFlex 6000 Medium Voltage Variable Frequency Drive Shipping and Handling Manual, publication 6000-IN008) for further information on the steel base and desired trench and mounting customer-specifications.

Figure 11 - Welding locations

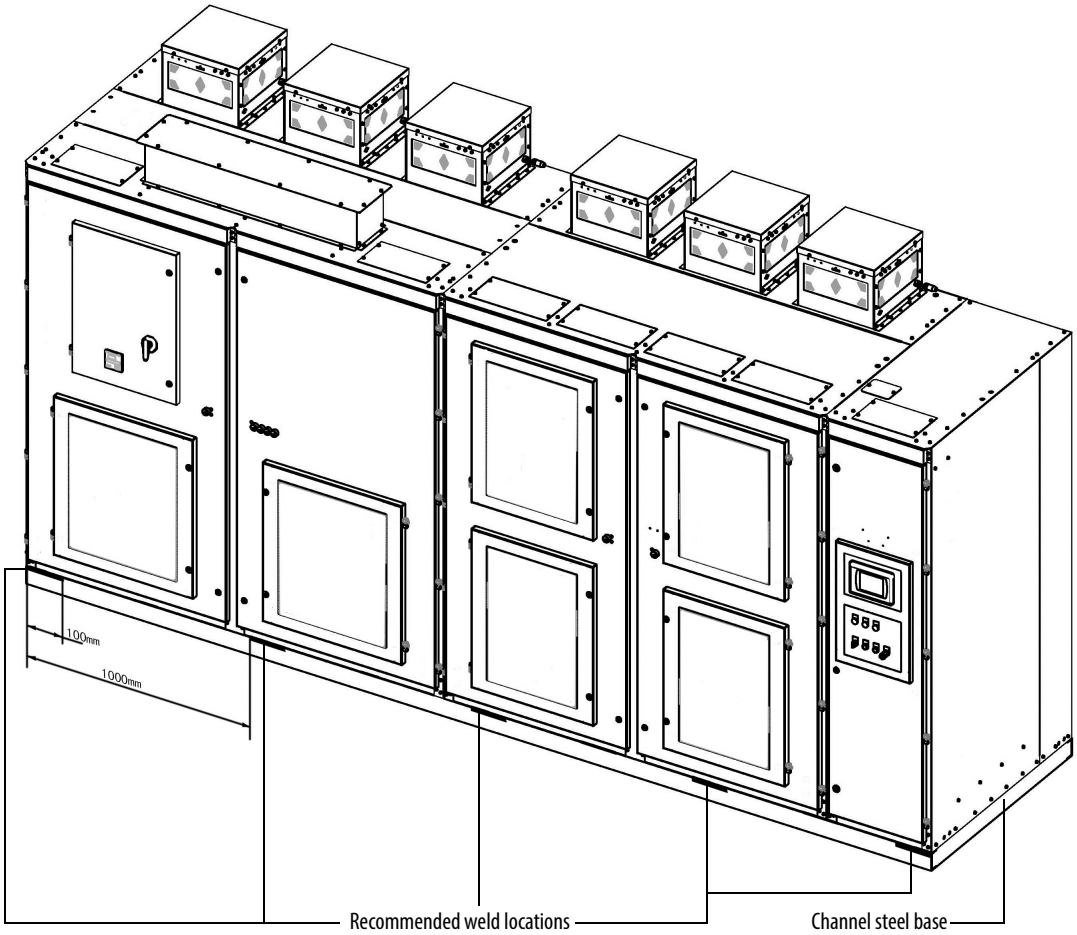

ATTENTION: Failure to correctly anchor the cabinet may result in damage to the equipment or injury to personnel.

Figure 12 - Typical Floor Drawing, A-Frame

Non-seismic

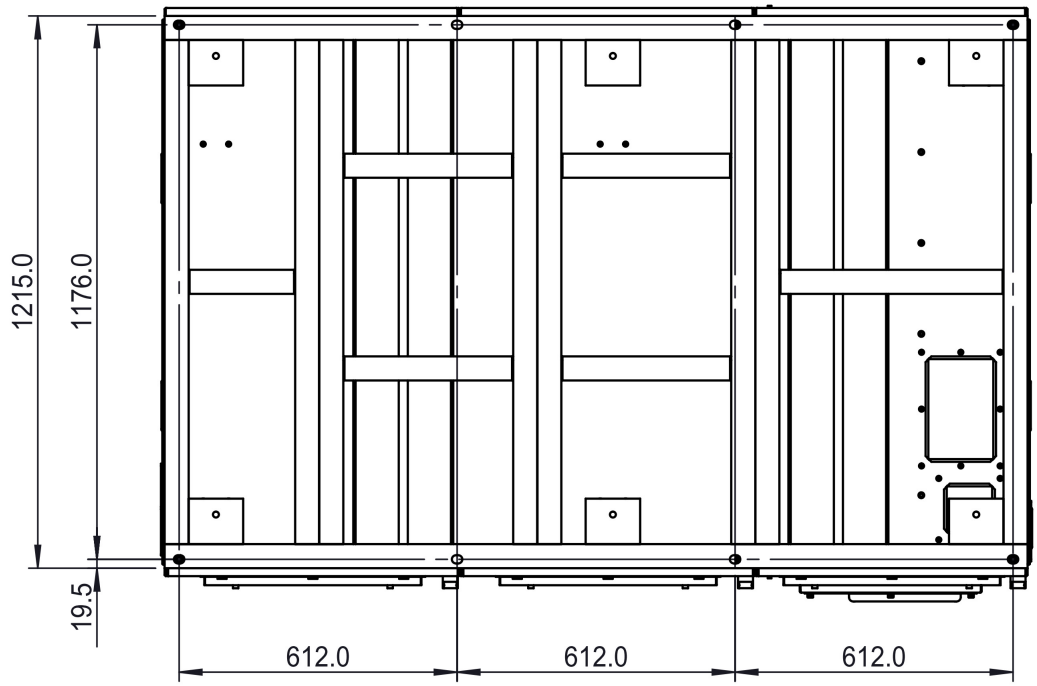

Seismic

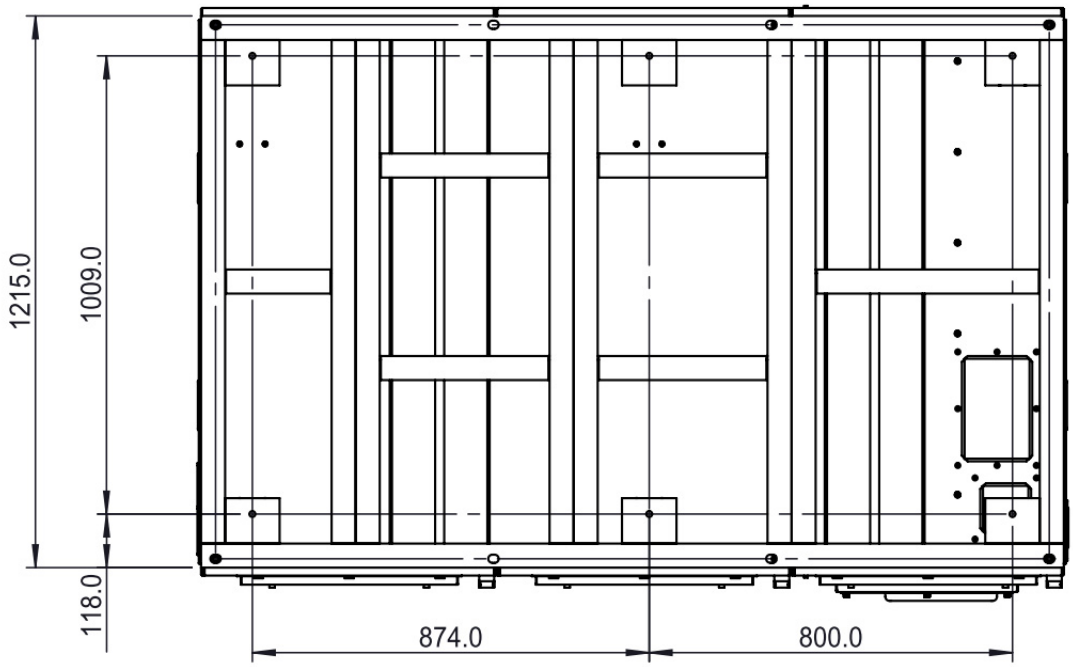

Secure the cabinet to the channel steel base using M12 bolt (recommended), lock washer, two flat washers, and a nut.

Install Seismic Rated Enclosures

This section describes how to install the drive for seismic conditions.

Figure 13 - Guidance for Seismic Installation

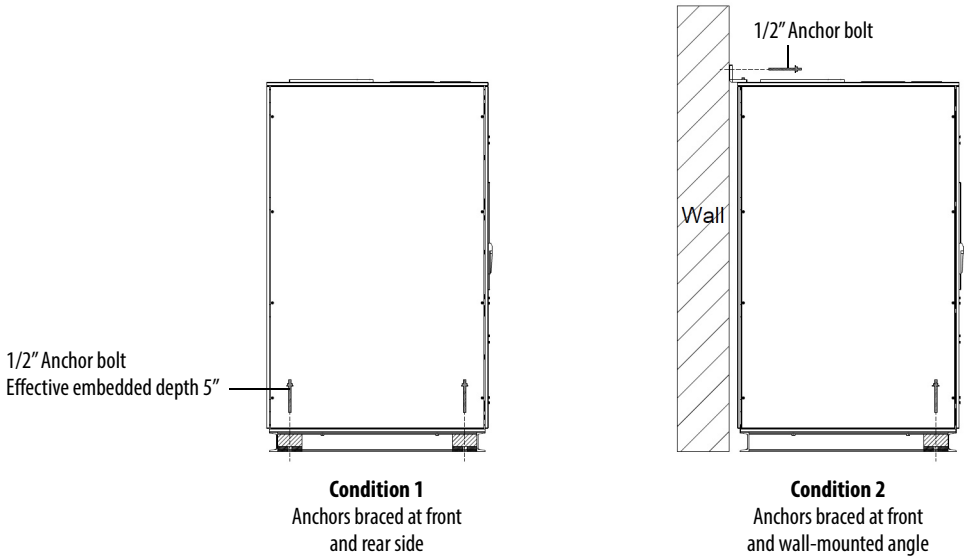

Install A-Frame Drives

For condition 1, 70 A seismic installation, follow these instructions:

1. Open MV front door and back door.
2. Remove the JC front barrier.
3. Remove two thermostats from the DIN rail in PC and TC at the right-hand side of the cabinet.

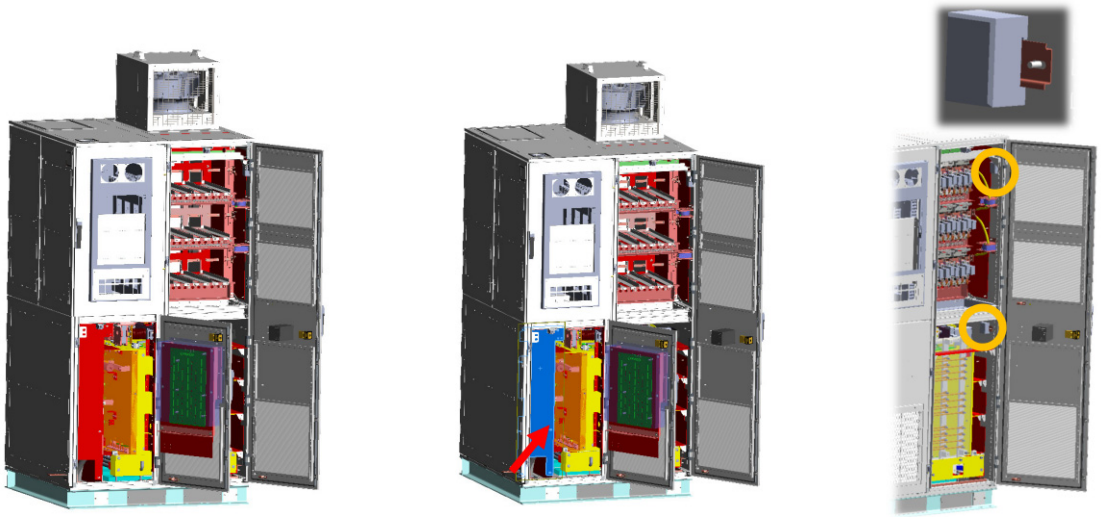

Step 1 **Step 2** **Step 3**

4. Remove the HECS insulation bracket.
5. Remove the grounding terminal of the right side plate at the back side.
6. Remove the right side plate, put the secondary cables close to Tx winding, and disassemble three horizontal baffles.

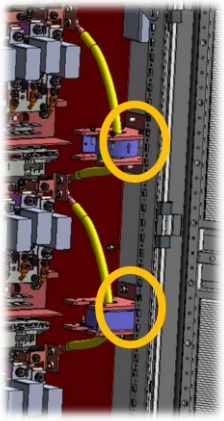

Step 4

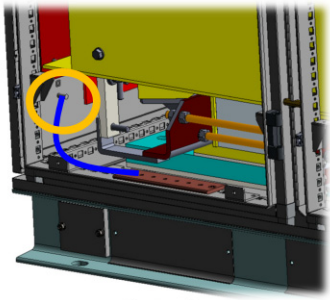

Step 5

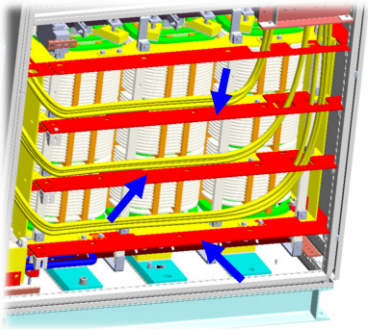

Step 6

7. Remove the seismic cover at the front and back side of the JC, and the right side of the drive.
8. Drill anchor holes at the left-hand side of the cabinet.
9. Drill anchor holes at the right-hand side of the cabinet, then install the anchors.

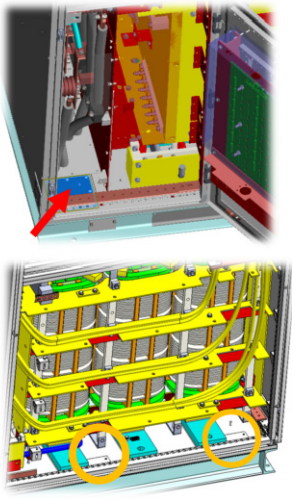

Step 7

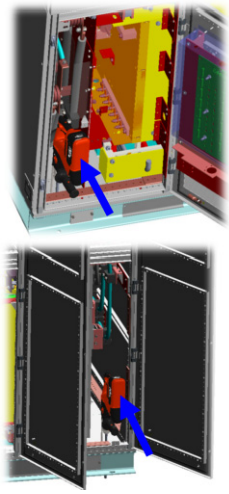

Step 8

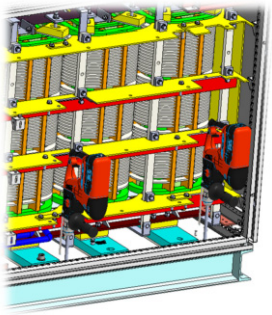

Step 9

10. Install the parts in reverse order of removal.

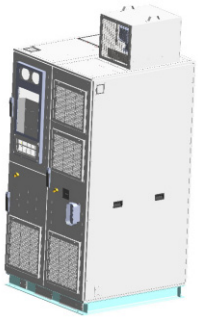

Step 10

For condition 1, 140 A seismic installation, follow these instructions:

1. Open MV front door and back door.
2. Remove the JC front barrier.
3. Remove the back horizontal baffles, cable bracket, and all seismic covers.

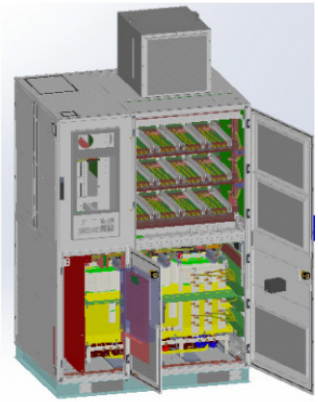

Step 1

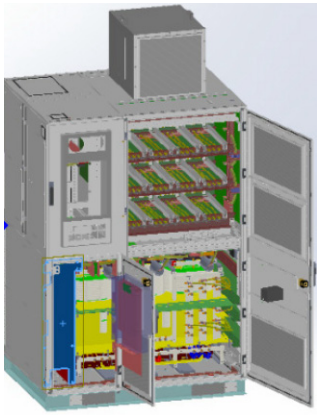

Step 2

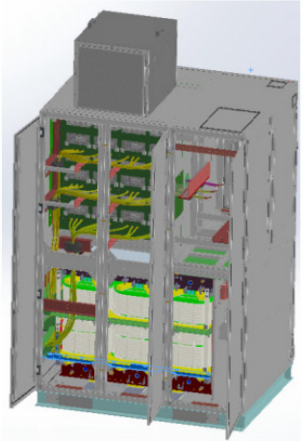

Step 3

4. Drill anchor holes at the back of the cabinet.
5. Drill anchor holes at the front of the cabinet.

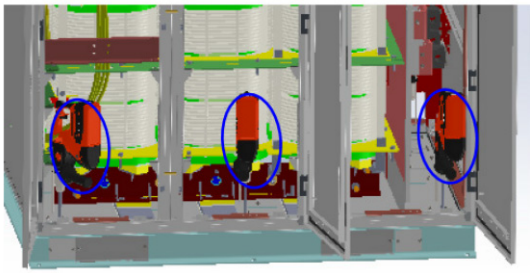

Step 4

Step 5

6. Install the removed parts in reverse order of removal.

Step 6

For condition 1, 215 A seismic installation, follow these instructions:

1. Open MV front door and back door.
2. Remove the JC front barrier.
3. Remove the back horizontal baffles and all seismic covers.

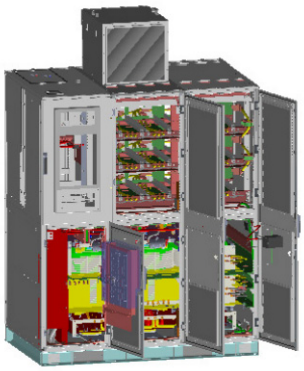

Step 1

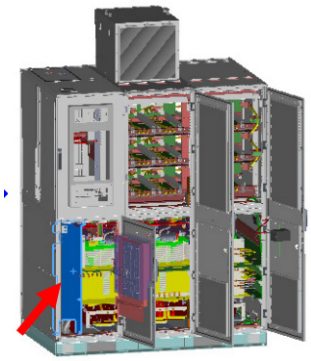

Step 2

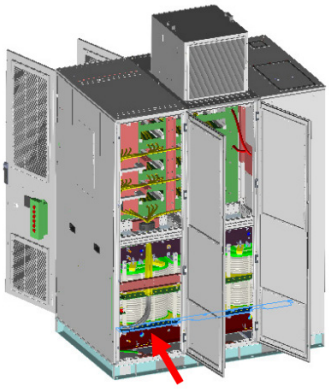

Step 3

4. Drill anchor holes at the front of the cabinet.
5. Drill anchor holes at the back of the cabinet.

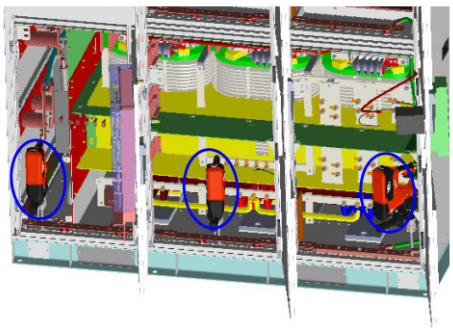

Step 4

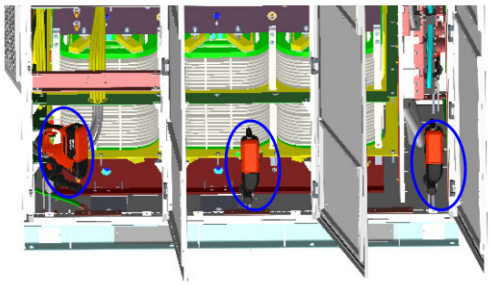

Step 5

6. Install the removed parts in reverse order of removal.

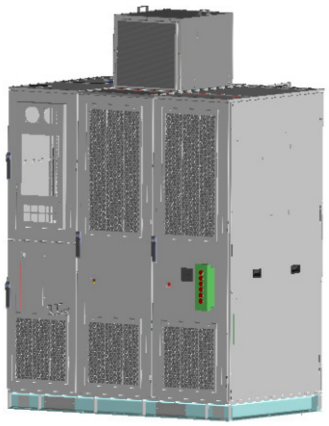

Step 6

For condition 2 seismic installation, if there is no rear access available, the top of the drive can be mounted to the wall rather than mounted to the floor at the back of the cabinet. If there is a fan redundancy condition for frame 1 and frame 2, then wall bracket B is not needed.

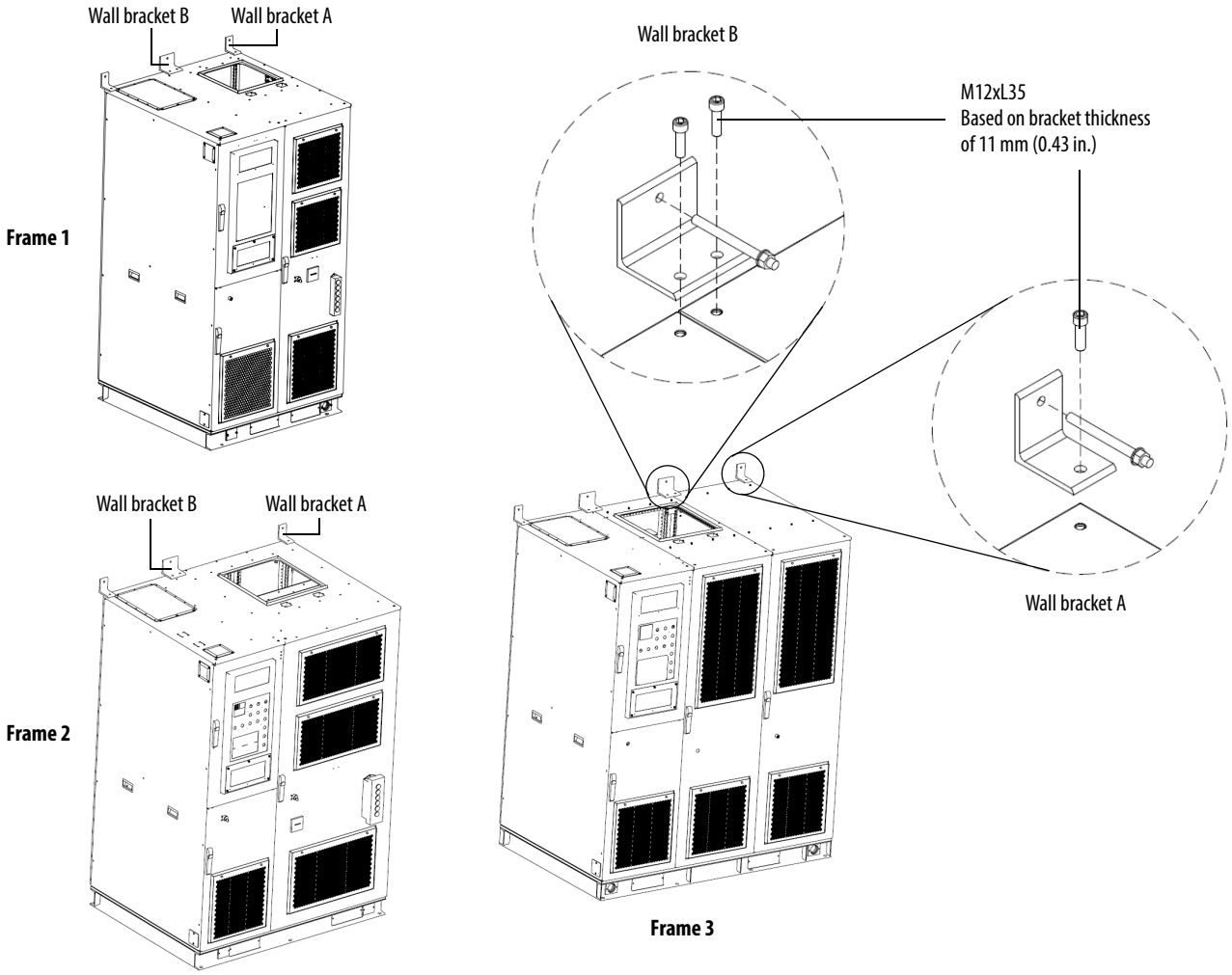

Install B-Frame Drives

For condition 1, installation of power cell cabinets, follow these instructions:

1. Disassemble the grounding busbar at the front of the cabinet.
2. Disassemble the anchor cover at the front of the cabinet.
3. Drill an anchor hole.

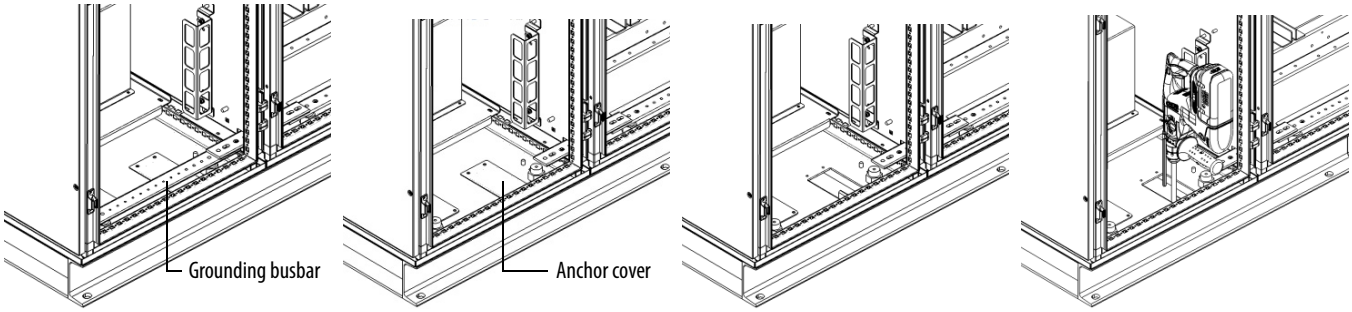

Left cabinet **Step 1** **Step 2** **Step 3**

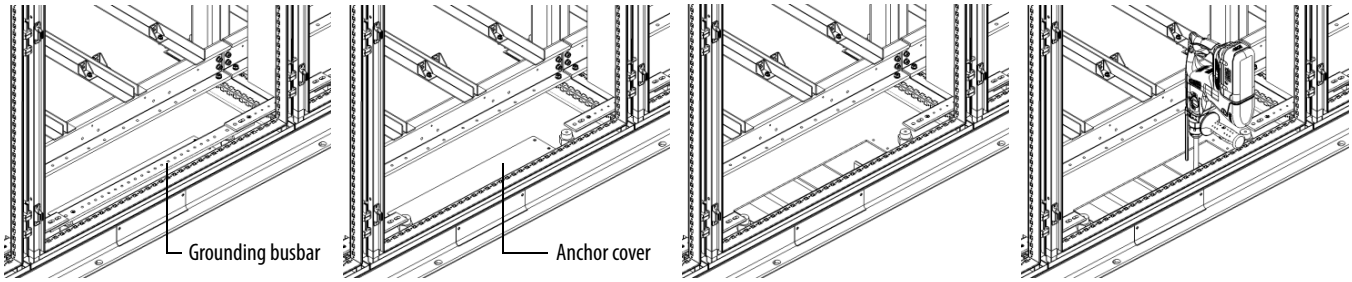

Middle cabinet **Step 1** **Step 2** **Step 3**

For condition 1, installation of transformer cabinets, follow these instructions:

1. Disassemble the grounding busbar, wire duct, and barrier bracket at the front of the cabinet.
2. Disassemble the anchor cover at the front of the cabinet.

3. Drill an anchor hole.

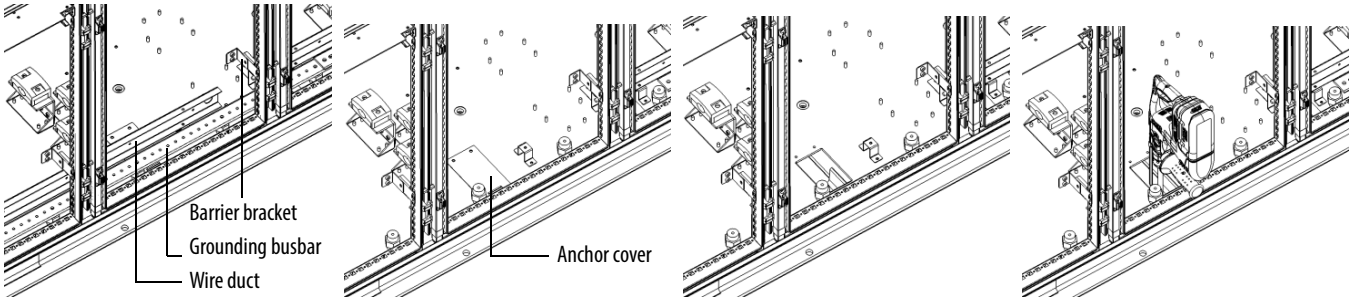

Left cabinet **Step 1** **Step 2** **Step 3**

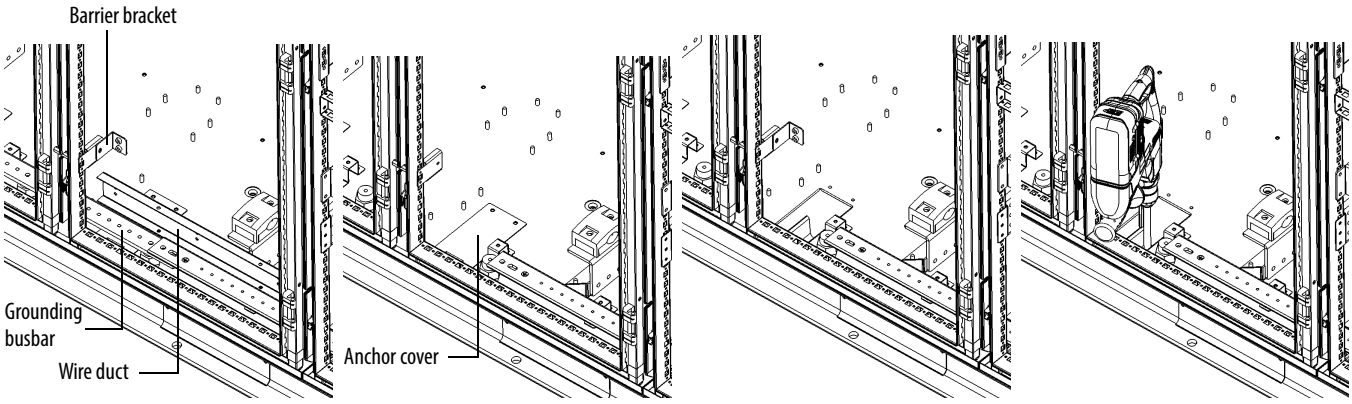

Right cabinet **Step 1** **Step 2** **Step 3**

For condition 1, installation of standard cabinets and filter cabinets, follow these instructions:

1. Disassemble the grounding busbar at the front of the cabinet.
2. Disassemble the anchor cover at the front of the cabinet.
3. Drill an anchor hole.

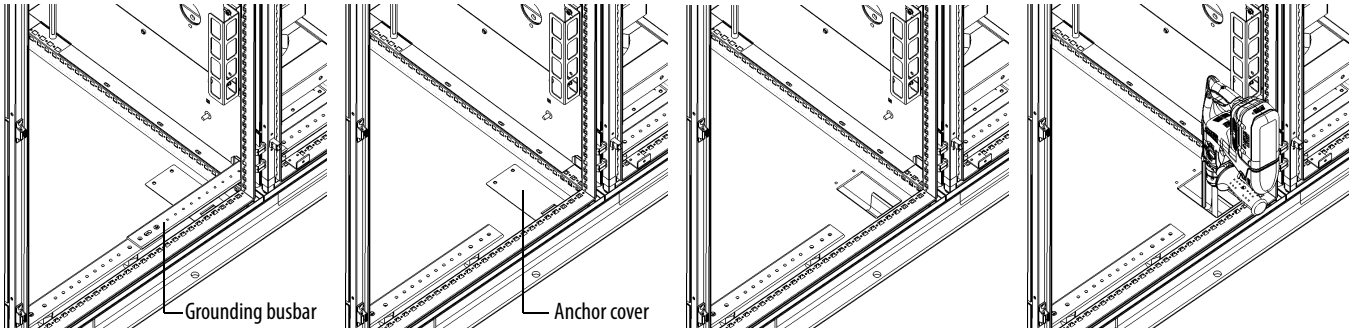

Standard or filter cabinet **Step 1** **Step 2** **Step 3**

For condition 2 seismic installation, if there is no rear access available, the top of the drive can be mounted to the wall rather than mounted to the floor at the back of the cabinet.

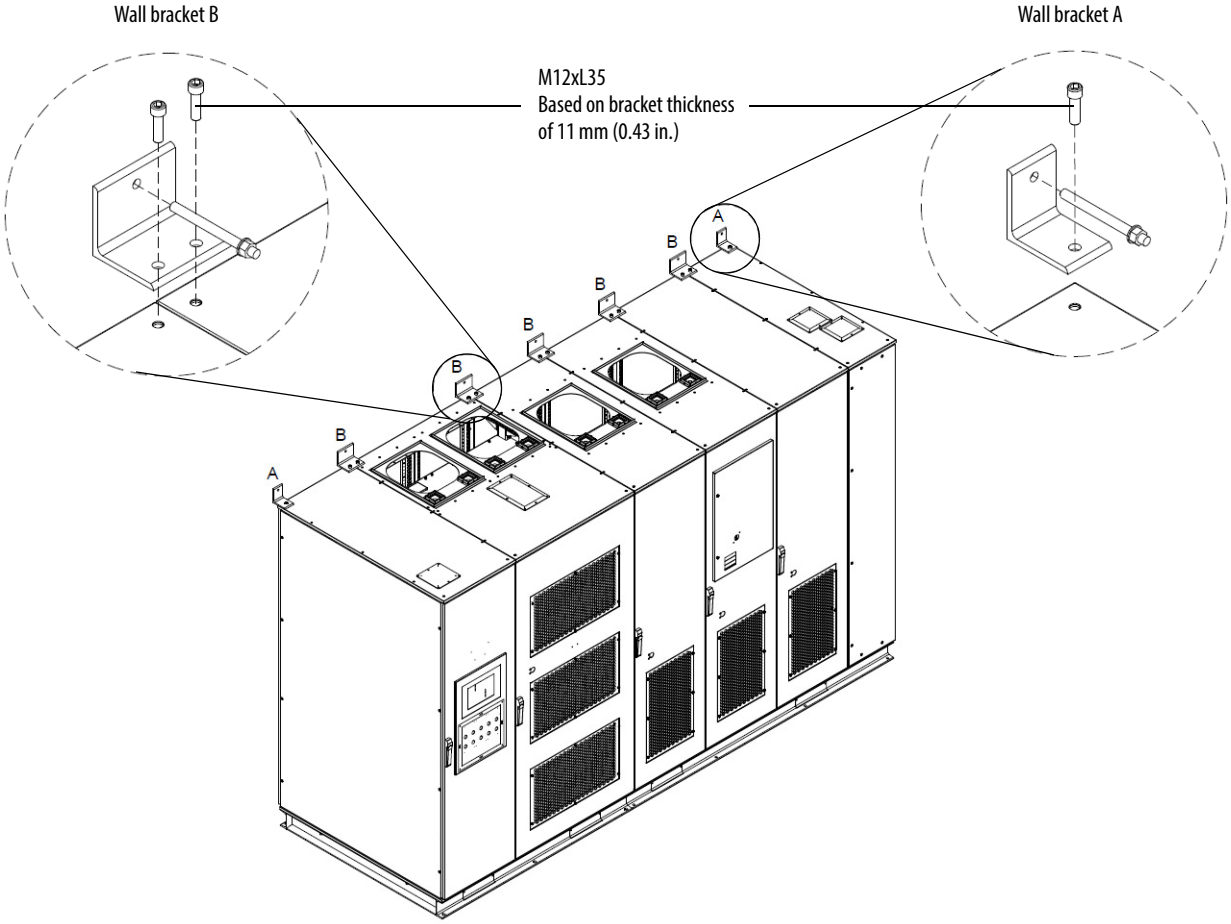

Figure 14 - ASTM A36 Angle Bracket Dimensions

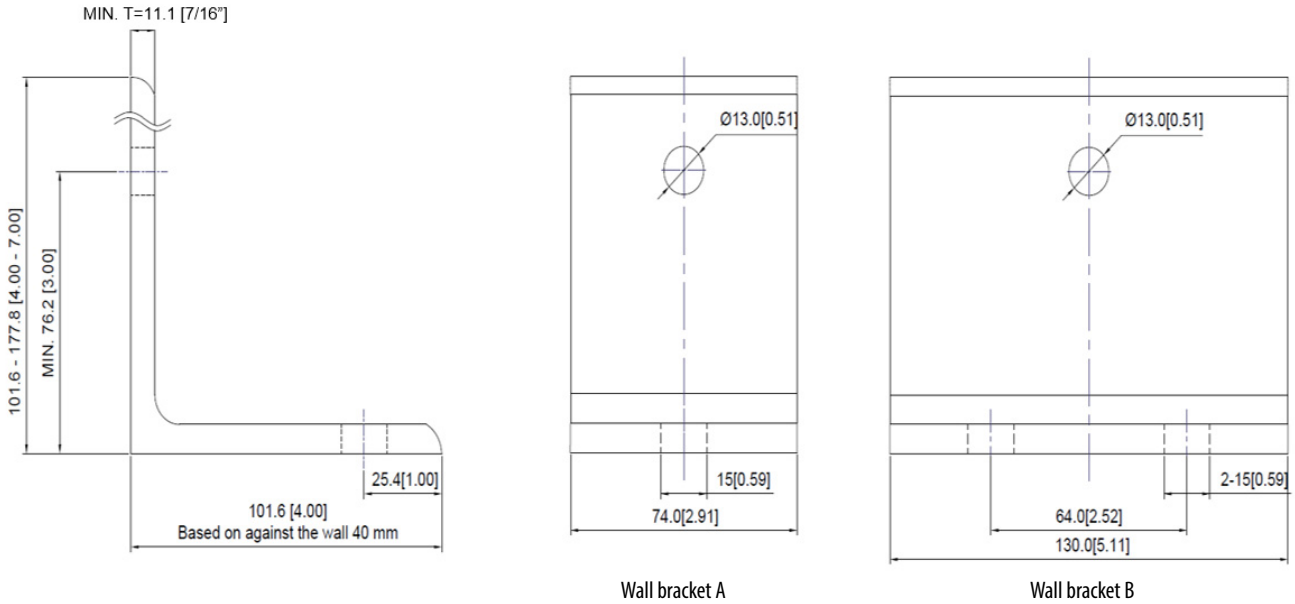

Install Main Cooling Fans

Main cooling fans are shipped in separate crates. The fans are shipped assembled in the fan housing, but must be installed after siting the drive.

IMPORTANT See Mounting Clearance Distance in the PowerFlex 6000 Medium Voltage Variable Frequency Drive Shipping and Handling Manual, publication 6000-IN008) to verify that the fans have the appropriate clearance distance on top of the cabinet.

Table 3 - Fan Housing Specifications

Model	Dimensions (HxWxD), approx.	Weight, approx.
RH40	340 x 440 x 500 mm (13.0 x 17.3 x 19.7 in.)	20 kg (44.1 lb)
RH45	380 x 490 x 550 mm (14.6 x 19.3 x 21.7 in.)	25 kg (55.1 lb)
EC400	428 x 480 x 672 mm (16.9 x 18.9 x 26.5 in.)	30 kg (66 lb)
EC500	520 x 580 x 783 mm (20.5 x 22.8 x 30.8 in.)	45 kg (99 lb)
	520 x 580 x 1125 mm (20.5 x 22.8 x 44.3 in.)	60 kg (132 lb)

1. Place the fan housing on the top plate of the drive, making sure that the socket is on the same side as the aviation plug.
2. Secure the fan housing using M6 hardware (six places).

   See Torque Requirements on page 69.
3. Connect the aviation plug located on top of the cabinet with the socket on the fan housing.

Figure 15 - Main Cooling Fan Housing, H-Frame

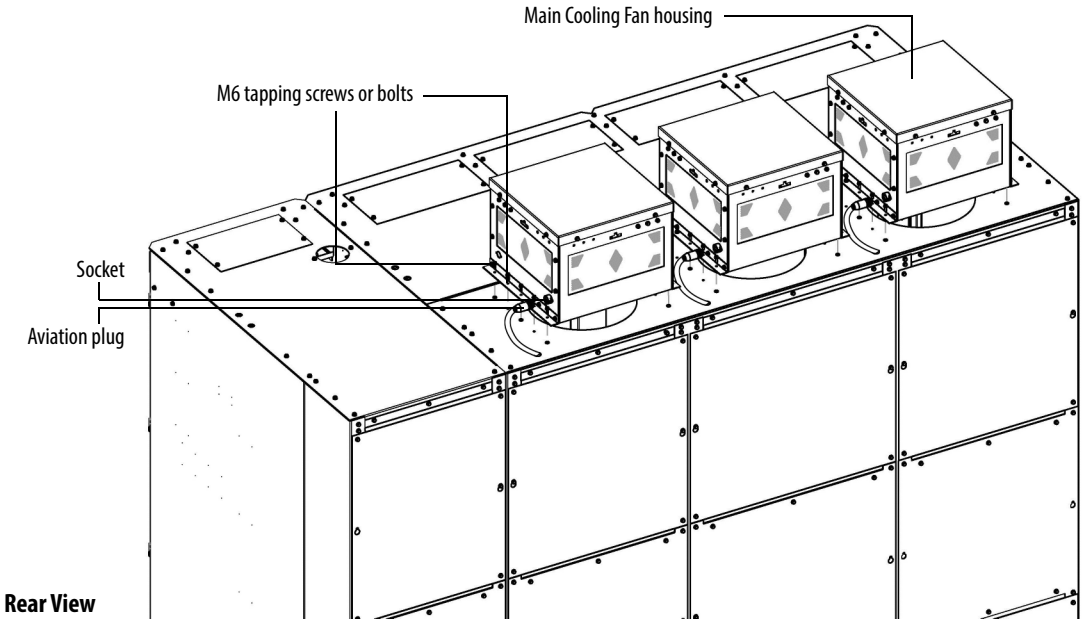

Figure 16 - Main Cooling Fan Housing, B-Frame

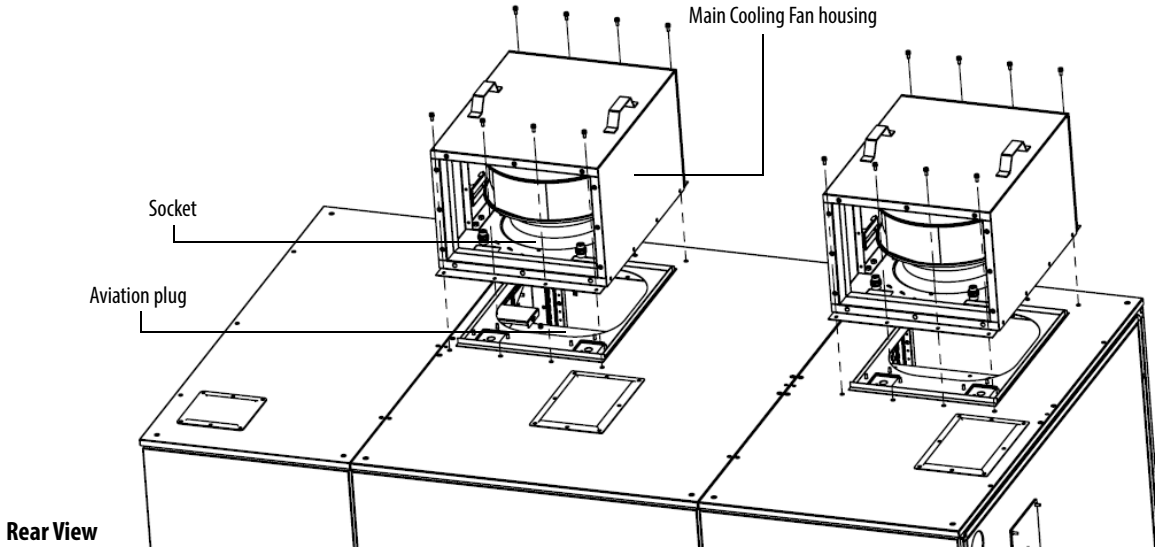

Install the Cooling Fan and Noise Reduction Barrier for A-Frame Drives

To install the cooling fan for A-Frame drives, follow these instructions.

1. Place the fan housing on the top plate of the drive. Verify that the socket is on the same side as the aviation plug.
2. Secure the fan housing using M6 hardware (six places).
3. Connect the aviation plug located on the top of the cabinet with the socket on the fan housing.

Figure 17 - Main Cooling Fan Housing, A-Frame

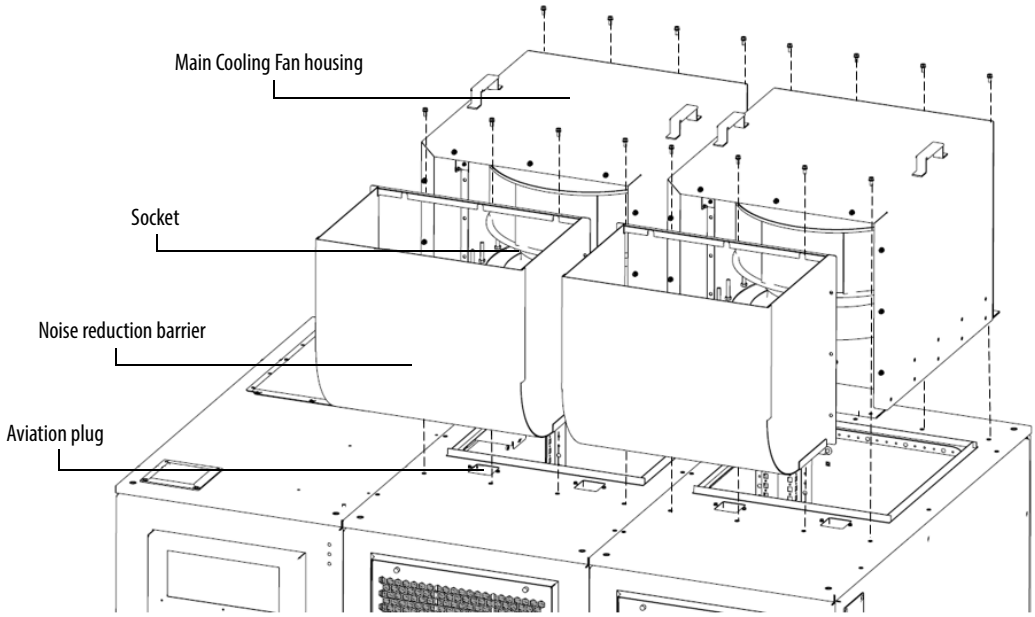

If your application uses noise reduction barriers for the fans, follow these instructions.

1. Remove the four M6 screws on the left and right sides of the front fan housing.
2. Place the noise reduction barrier in front of the fan housing.
3. Secure the noise reduction barrier wit h the four M6 screws.

Figure 18 - Install the Noise Reduction Barrier

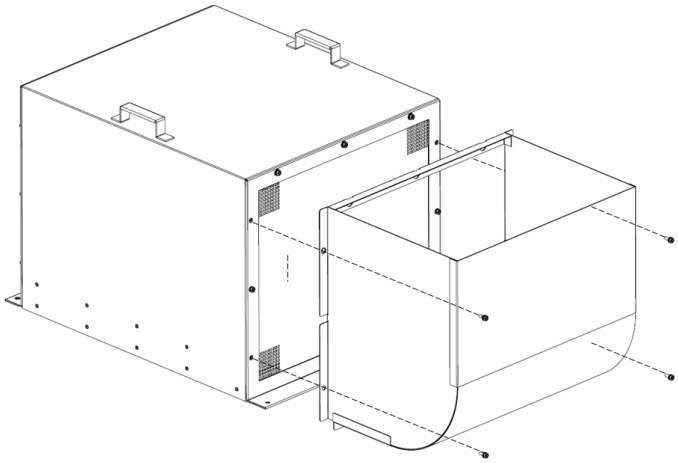

Install the Mixing Hood for A-Frame Drives

If your application uses a mixing hood with redundant fan, follow these instructions.

1. Remove the air hood from the skid.
2. Install the four eyebolts at each corner of the air hood.
3. Life the air hood by the four eyebolts and align with the provisions on the top plate.
4. Secure the air hood with 12 M16x16 hexagon combination screws.
5. Put the fan modules onto the air hood and align with the provisions on the air hood.
6. Secure the fan modules with 16 M16x16 hexagon combination screws.

Figure 19 - Install a Mixing Hood with Redundant Fan

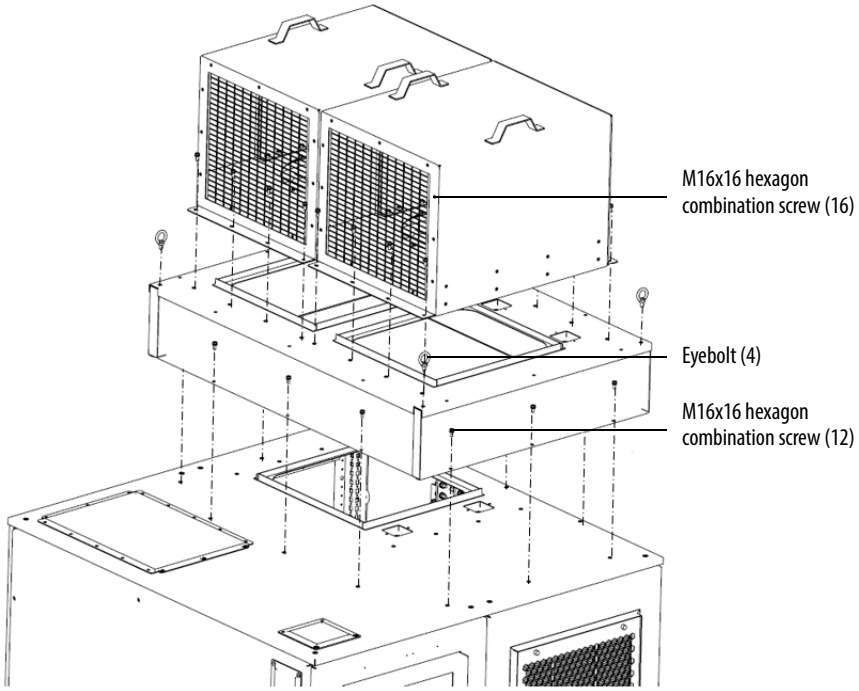

Install Power Modules (if applicable)

Power Modules are available in a wide variety of amperage ratings relating to the required motor current. Power Modules that are rated up to and including 350 A are mounted in the drive and ship already installed.

Power Modules that are rated above 350 A are shipped separately, therefore site installation and cable connection is needed. In this case, a lift cart is supplied and shipped together with the other components.

Power Module Lift Cart

ATTENTION: Only authorized personnel should operate the lift cart. Keep hands and feet away from the lifting mechanism. Do not stand under the lift tray when in use. Store the lift cart with the tray fully lowered.

The lift cart's hydraulic cylinder can be operated by either a hand or foot crank. The lifting capacity is 400 kg (882 lb).

Figure 20 - Lift Cart Procedure

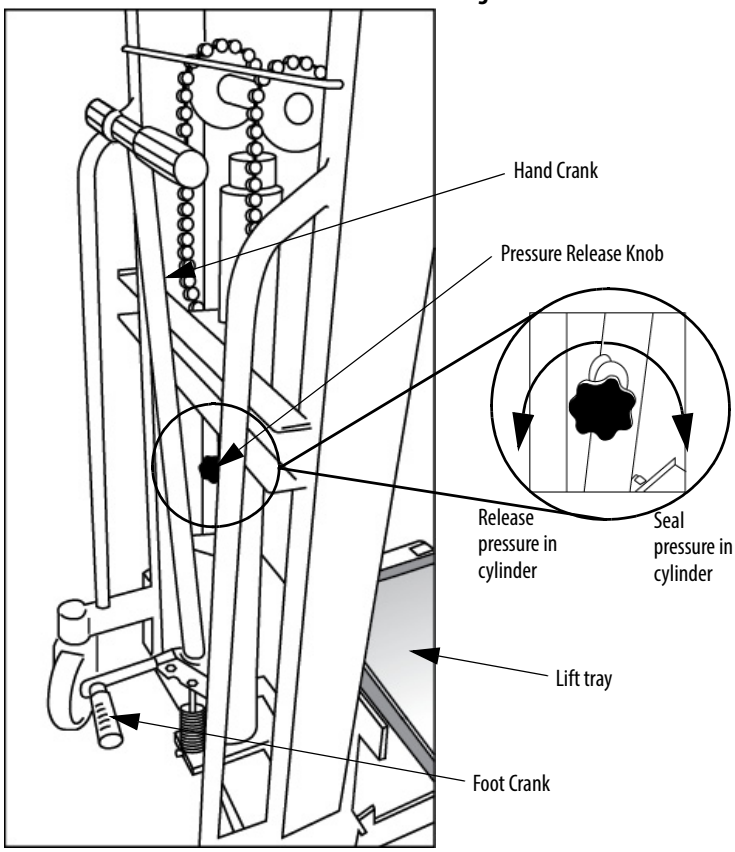

1. Check the lift tray before use to ensure that the tray can be raised and lowered smoothly.
2. Rotate the Pressure Release Knob counterclockwise to ensure that the tray is in the lowest position.
3. Move the Power Module on the tray and lift the module to the appropriate height using the Foot Crank and complete the installation.

TIP The Foot Crank raises the lift tray faster than the Hand Crank. Use this to raise the Power Module to just below the tray assembly in the drive. Use the Hand Crank for final precise positioning.

4. Rotate the Pressure Release Knob counterclockwise to lower the tray to its original position.
5. Repeat steps 1...4 to complete the installation for all Power Modules.

Table 4 - Power Module Specifications

Frame	Output Rating (Amps)	Dimensions (HxWxD), approx.	Weight, approx.
A-Frame	36…70 A	210 x 110 x 569 mm (8.3 x 4.3 x 22.4 in.)	13 kg (28.6 lb)
	71…140 A	210 x 190 x 624.5 mm (8.3 x 7.5 x 24.6 in)	25 kg (55 lb)
	141…215 A	210 x 215 x 674 mm (8.3 x 8.5 x 26.5 in)	35 kg (77 lb)
H-Frame	≤150 A	420 x 180 x 615 mm (16.5 x 7.1 x 24.2 in.)	20 kg (44.1 lb)
	151…200 A	420 x 260 x 615 mm (16.5 x 10.2 x 24.2 in.)	25 kg (55.1 lb)
B-Frame	201…350 A	552.5 x 244.5 x 663 mm (21.8 x 9.6 x 26.1 in.)	70 kg (154 lb)
	351…680 A	471 x 354 x 746 mm (18.5 x 13.9 x 29.4 in.)	95 kg (209 lb)

ATTENTION: Two people are required to handle the Power Modules.

Install Power Modules

IMPORTANT The Power Module should be handled carefully. After removing the packaging, inspect the Power Module to confirm that there is no damage and moisture.

1. You can use the lift cart to move and position the Power Module to the appropriate location in the cabinet.
2. Push the Power Module slowly along the guide rails until it cannot be pushed in further.
3. After installing the Power Module in place, use the mounting brackets and the M6 × 16 large flat pad galvanized nickel screws to fix the four corners, as shown below.

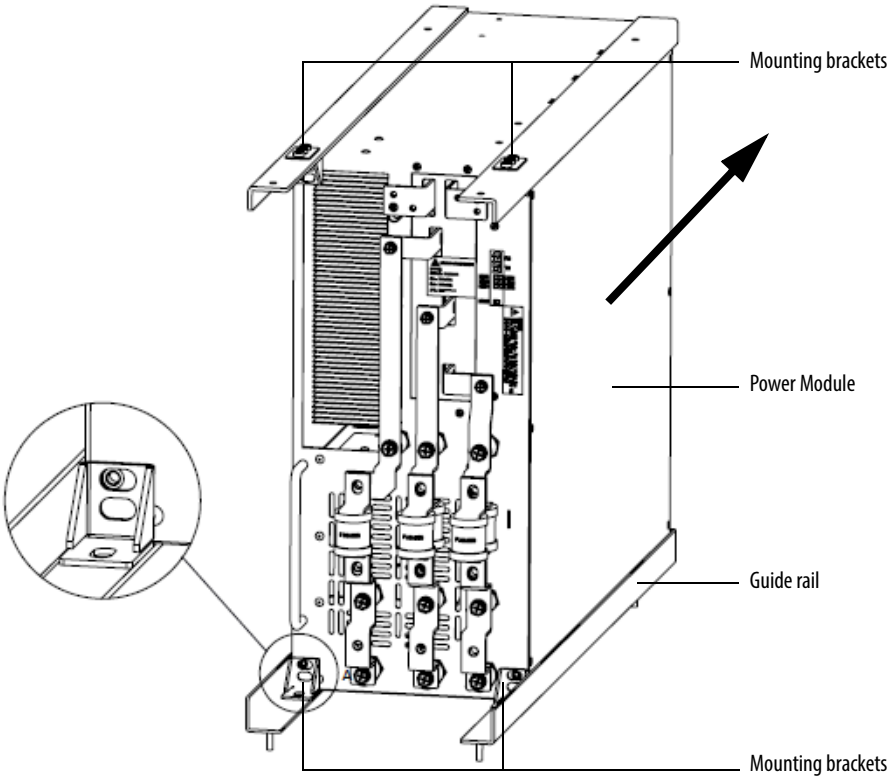

Install Power Modules for A-Frame Drives

IMPORTANT The Power Module should be handled carefully. After removing the packaging, inspect the Power Module to confirm that there is no damage and moisture.

1. Push the Power Module slowly along the guide rails until it cannot be pushed in further.
2. After installing the Power Module in place:

a. For 140/215 A rating – use the mounting brackets and M6x16 large flat pad galvanized nickel screws to secure the two bottom corners.

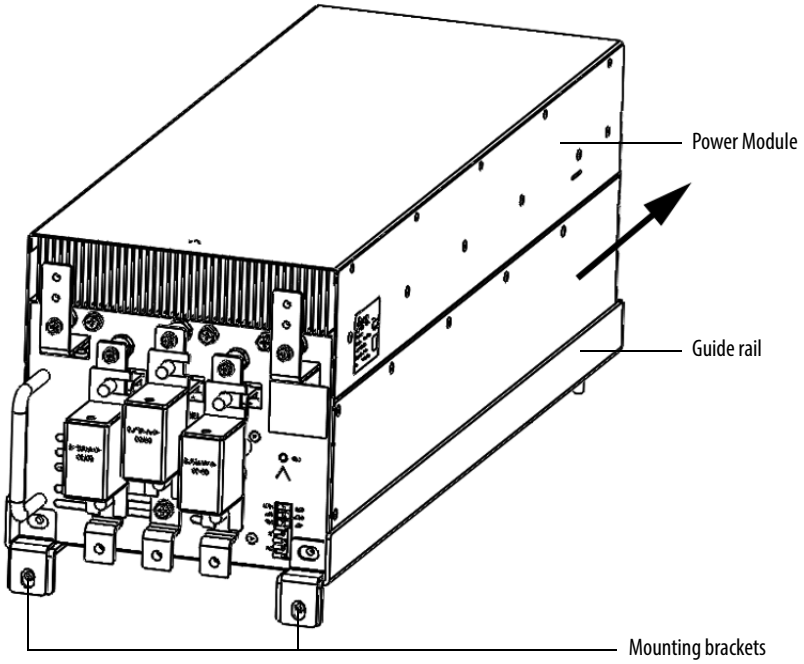

b. For 70 A rating – use M16x16 large flat pad galvanized nickel screws to secure the two bottom corners directly.

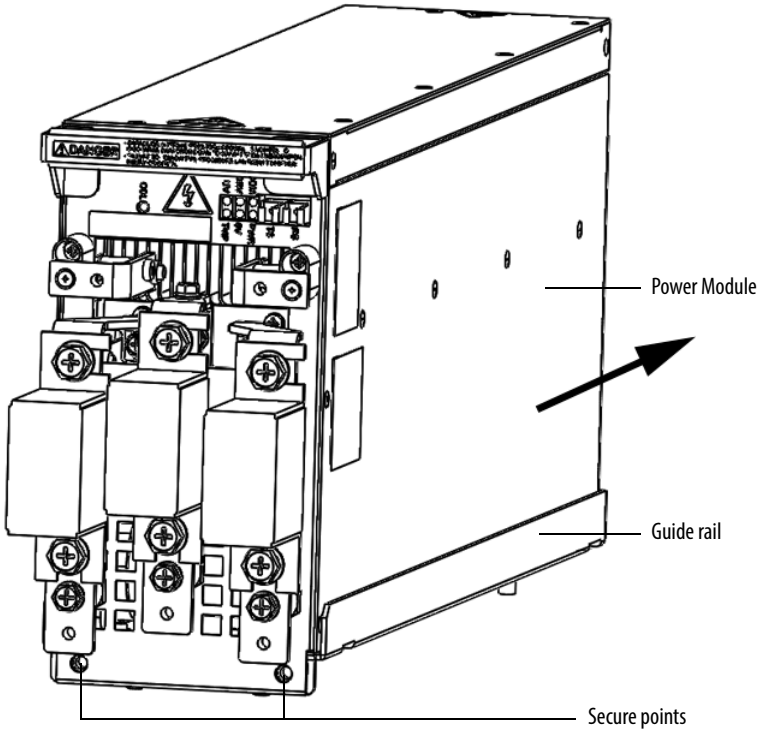

External Ducting

The PowerFlex 6000 design can accommodate ducting exhaust air outside of the control room.

ATTENTION: The Isolation Transformer Cabinet and the Power Module/LV Control Cabinet must be ducted separately.

The following requirements are mandatory design requirements for systems that will externally duct the exhaust air and draw cleansed outside air:

- External ducting including an external filtering system must not add more than 50 Pa (0.2 in. of water) pressure drop to the PowerFlex 6000 drive airflow system. Ensure a minimum top clearance of 1500 mm (39.4 in.) above the drive top plate.
- The control room must provide slightly more make-up air, creating a pressurized room. This slight pressurization prevents unfiltered air drawing into the room.
- The drive is intended to operate in conditions with no special precautions to minimize the presence of sand or dust, but not in close proximity to sand or dust sources. IEC 721-1 defines this as being less than 0.2 mg/m^3 of dust.
- If outside air does not meet this condition, filter the air to EU EN779 Class F6 or ASHRAE Standard 52.2 MERV 11. These ratings address a high percentage of the 1.0...3.0 µm particle size. Clean or change filters regularly to ensure proper flow.
- The make-up air must be between 0...40 °C (32...104°F).
- Relative humidity must be less than 95% noncondensing.
- If the ducting length is greater than 4 m (13 ft), an axial fan must be installed at the air outlet. The exhaust flow of the axial fan must be greater than the total flow amount of all centrifugal fans in this air duct.
- The ducting can be shared by more than one cabinet.
- Do not cover any medium voltage or control power wires that enter or exit from the top of the cabinet.
- The air duct outlet must slope downward to prevent water damage.
- Screens must be installed in the air duct outlet.
- An air inlet must be added to the drive room. The cross-sectional area of this inlet must meet the ventilation requirements of all drives. Screens must be installed in the air inlet.
- The air inlet and outlet must not be at the same side of the drive room.

Figure 21 - Cabinet Airflow, A-Frame[1]

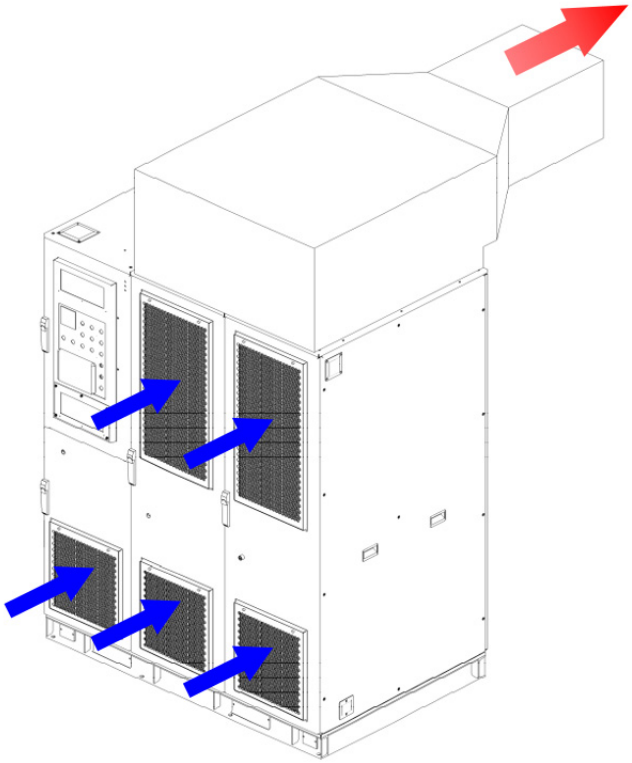

Figure 22 - Cabinet Airflow, H-Frame[1]

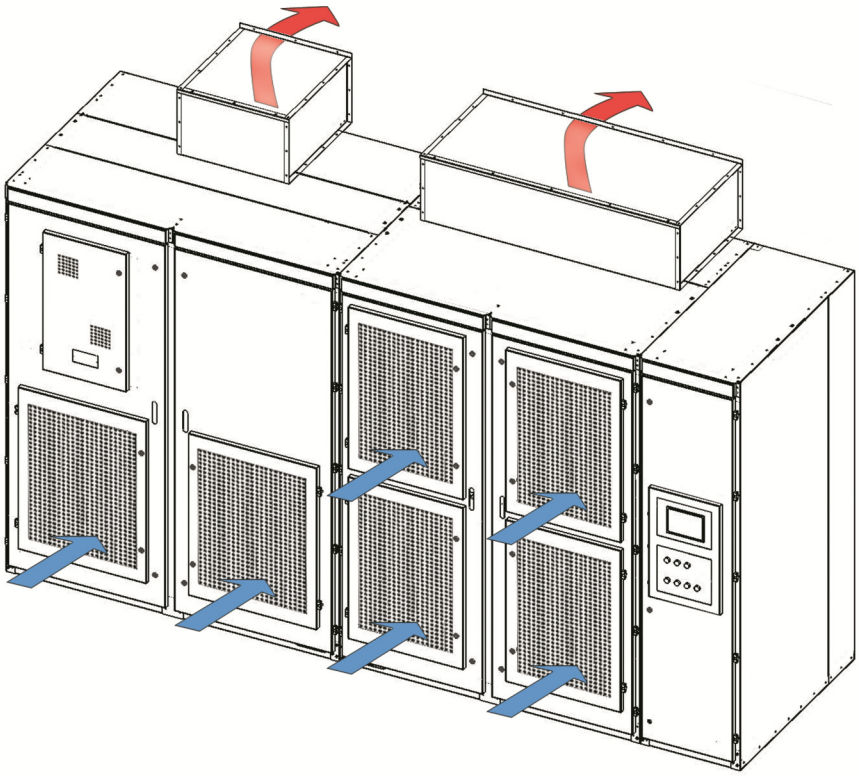

(1) Top ducting shown by contractor.

Figure 23 - Cabinet Airflow, B-Frame(1)

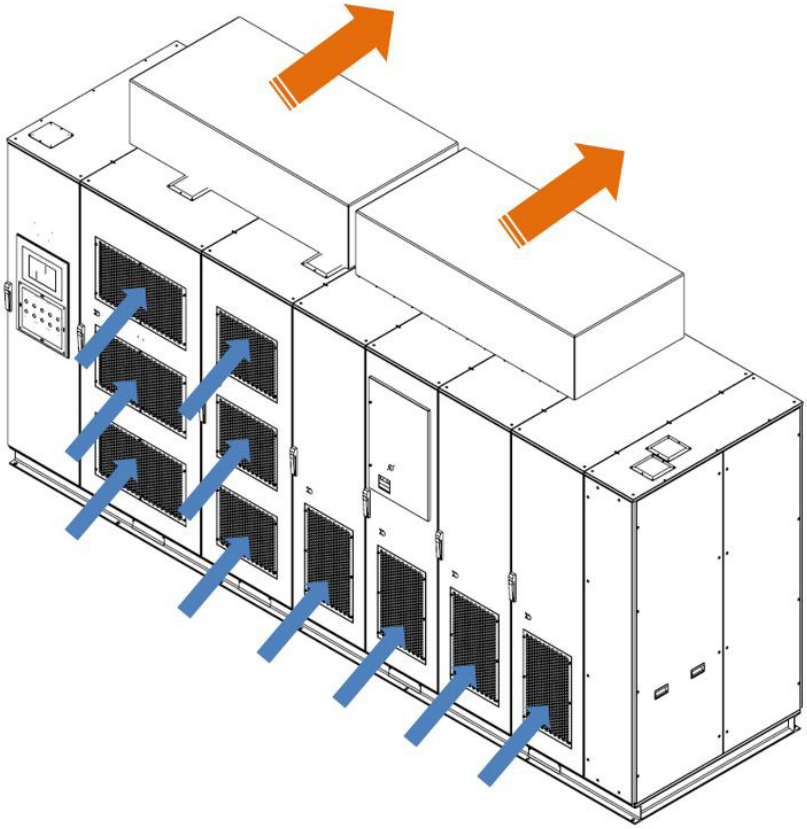

Air Conditioning Sizing

If the drive is located in an enclosed space, install air conditioners for each drive. A general formula to calculate air conditioner power required:

$$\frac{DriveRating(kW) \times (1 - DriveEfficiency)}{3.5} = \text{Air Conditioning Size (tons)}$$

EXAMPLE For a 1000 kW drive with 96.5% efficiency:

$$\frac{1000 \times (1 - 0.\dot{9}6\dot{5})}{3.5} = 10 \text{ tons of AC required}$$

This is for a general estimate. See the actual heat loss data to calculate air conditioning sizing. Contact the local Rockwell Automation office for actual data.

Drive Electrical Installation

Introduction

The installation of all external power cables and control signal wiring is covered in this chapter. General electrical safety and installation guideline topics are also included. The basic activities include connecting the system ground cable, line and motor cables, control power, and all control signal wiring from the sources to the drive. See Figure 45 and Figure 46 for an overview of these connections.

Electrical interconnections are also required between cabinets that have shipped separately. These are described in Drive Electrical Interconnection on page 57.

Safety and Codes

SHOCK HAZARD: Connecting to potentially energized industrial control equipment can be dangerous. Severe injury or death can result from electrical shock, burn, or unintended actuation of control equipment. Hazardous voltages may exist in the cabinet even with the circuit breaker in the off position. Required practice is to disconnect and lock out control equipment from power sources, and confirm discharge of stored energy in capacitors. If it is necessary to work in the vicinity of energized equipment, the safety-related work practices that are outlined in Electrical Safety requirements for Employee Work places must be followed. Before attempting any work, verify that the system has been locked out and tested to have no potential.

Lockout and tagout the input circuit breaker before performing any electrical connection work. After the input circuit breaker cabinet doors are opened, immediately test the outgoing connections and any components that are connected to medium voltage with a live-line tool (hot stick) while wearing high-voltage gloves. Pay special attention to any capacitors connected to medium voltage that can retain a charge for a period of time. Only after the equipment has been verified as isolated and de-energized can subsequent work be performed. Even though the input to the drive may be open, it is still possible for hazardous voltage to be present.

See national and local safety guidelines for detailed procedures on how to safely isolate the equipment from hazards.

ATTENTION: The national and local electrical codes outline provisions for safely installing electrical equipment. Installation must comply with specifications regarding wire type, conductor sizes, branch circuit protection, and disconnect devices. Failure to do so may result in personal injury and/or equipment damage.

Electrical Drawings

Before connecting any power cables or control signal wiring, review and understand the information that is contained in the project-specific Electrical Drawings.

They contain critical information such as:

- Minimum power cable insulation ratings and sizes
- Power terminal locations and designations
- Terminal block designations for all connections to external customer control signal wiring and control power supply cables.

The practice that is used within the PowerFlex 6000 electrical drawing is based on the IEC or NEMA standard depending on the requirements. The symbols used to identify components on the drawings are international.

Device designations that are used on the drawings and labeling are explained on each drawing set.

Wiring identification uses a source/destination wire number convention on point-to-point multi-conductor wiring and in situations where the system is warranted. The wire-numbering system of unique, single numbers for multi-drop and point-to-point wiring continues to be used for general control and power wiring.

Wiring that connects between the sheets or that ends at one point and starts at another point on a drawing has an arrow and drawing reference to indicate the ongoing connection. The drawing reference indicates the sheet and the X/Y coordinates of the continuation point. The reference system is explained on a sheet in each drawing set. The unique wire numbering system serves as confirmation that the correct wire is being traced from sheet-to-sheet or across a drawing. Wires in multi-conductor cables are typically identified by color rather than by number. Abbreviations used to identify the colors on the drawings are fully identified on a sheet in the drawing set.

Grounding System Requirements

As a general guideline, the ground path must be of sufficiently low impedance and capacity that:

- the rise in potential of the drive ground point when subjected to a current of twice the rating of the supply should be no higher than 4V over ground potential
- the current flowing into a ground fault is of sufficient magnitude to cause the protection to operate.

The general grounding point must be reliably connected with the grounding network.

Attach an external ground cable to the main ground bus, in compliance with applicable national and local electrical codes.

IMPORTANT The primary grounding cable must have a diameter of at least 50 mm^2 and meet all applicable national and local electrical codes.

Run the system ground cable separately from power and signal wiring so that faults:

- do not damage the grounding circuit
- will not interfere with or damage the protection or metering systems, or cause undue disturbance on power lines.

Power Cable Insulation Requirements

Incoming line power cable ratings are shown on the Electrical Drawings and reflect what would typically be supplied, based on line voltage rating.

All voltage ratings for outgoing motor cables that are shown are line-to-ground rated power-frequency voltages and line-to-line power-frequency voltages.

Table 5 - Cable Insulation Requirements for Outgoing Motor Cables

System Voltage (V, RMS)	Minimum Insulation Rating (kV) - Motor Side	
	Line-to-Ground Rated Power Frequency Voltage U_0	Line-to-Line Rated Power Frequency Voltage U
2300	≥1.7	≥2.8
2400	≥1.7	≥2.8
3000	≥2.3	≥3.9
3300	≥2.3	≥3.9
4000	≥2.8	≥4.8
4160	≥2.8	≥4.8
6000	≥4.0	≥6.9
6300	≥4.5	≥7.8
6600	≥4.5	≥7.8
6900	≥4.8	≥8.3
10,000	≥6.4	≥11.1
11,000	≥7.2	≥12.5

Select cables of appropriate voltage classes when the incoming line grid-side voltage class differs from the outgoing line motor-side voltage class.

Standard power cable ratings commercially available can vary in different regions around the world. Cable must meet the minimum line-to-ground and line-to-line requirements.

IMPORTANT Follow the recommended field power cabling insulation levels to help ensure trouble-free startup and operation. The cable insulation level must be increased over that which would be supplied for an across-the-line application with the same rated line-to-line voltage.

Power Cable Design Considerations

Use fire retardant cables for the drive input/output connections.

Shielded or unshielded cable can be used based on the criteria that are considered by the distribution system designer and national and local electrical codes.

If shielded power cables are used, connect the shield of the main input/output power cables with the general grounding point of the drive. Ground the drive output protective grounding connection separately, and only at the drive side.

Comply with the maximum tensile stress and the minimum curvature radius that is recommended by the cable manufacturer.

Do not bundle the input/output cables of the drive together.

The power cable tray must not be less than 300 mm (12 in.).

There must be no gaps where the conduit connects to the cabinet and the ground bond must be less than 0.1 ohms. Spacing between wire groups is the recommended minimum for parallel runs of approximately 61 m (200 ft) or less.

IMPORTANT	PowerFlex 6000 drives are able to operate motors if the cable length is less than 800 m (2624 ft). Contact the factory when cable lengths at the drive output exceed 800 m (2624 ft). When the cable length is longer than 800 m (2624 ft), an assessment is required. It does not necessarily mean that an output filter is required. Configurations can be provided for longer cable distances, but must be specified at the time of order.

All input and output power wiring, control wiring, or conduit must be brought through the conduit entrance holes of the cabinet. Use appropriate connectors to maintain the environmental rating of the cabinet.

Motor Cable Sizing

Voltage drop in motor leads may adversely affect motor starting and running performance. Installation and application requirements may dictate that larger wire sizes than indicated in national and local electrical codes are used.

Wire sizes must be selected individually, observing all applicable safety and national and local electrical codes. The minimum permissible wire size does not necessarily result in the best operating economy. The minimum recommended size for the wires between the drive and the motor is the same as that used if a main voltage source connection to the motor was used. The distance between the drive and motor can affect the size of the conductors used.

Consult the Electrical Drawings and appropriate national and local electrical codes to determine correct power wiring. If assistance is needed, contact your local Rockwell Automation Sales Office.

Control Signal Wiring Design Considerations

Use shielded cables for all analog and digital control cables.

Steel conduit or a cable tray can be used for all PowerFlex 6000 drive power or control wiring; however, use only steel conduit for all signal wiring.

ATTENTION: Steel conduit is required for all control and signal circuits when the drive is installed in European Union countries.

Wires for digital and analog signals must be routed separately.

Control cables and power cables must be routed separately; the distance between the control cable tray and the power cable tray must not be less than 300 mm (11.8 in.).

If the control cable must pass through the power cable tray, the angle between the cable trays must be as close to 90° as possible.

Do not mix AC and DC wires in the same cable bundle.

General Wire Categories on page 71 identifies general wire categories for installing the PowerFlex 6000 drive. Each category has an associated wire group number that is used to identify the required wire. Application and signal examples, along with the recommended type of cable for each group, are provided. A matrix providing the recommended minimum spacing between different wire groups that run in the same tray or in a separate conduit is also provided.

Control Signal Wire Shield Grounding

Guidelines for Drive Signal and Safety Grounds: when using interface cables carrying signals, where the frequency does not exceed 1 MHz, for communications with the drive, follow these general guidelines:

- Ground screen mesh around the entire circumference, rather than forming a pigtail grounded only at one point.
- For coaxial cables with a single conductor surrounded by a mesh screen, ground the screen at both ends.
- When using a multi-layer screened cable (that is, a cable with both a mesh screen and a metal sheath or some form of foil), there are two alternative methods:
  - Ground the mesh screen at both ends to the metal sheath. The metal sheath or foil (known as the drain) should, unless otherwise specified, be grounded at one end only, again, as specified above, at the receiver end or the end that is physically closest to the main equipment ground bus
  - Leave the metal sheath or foil insulated from ground, and ground the other conductors and the mesh cable screen at one end only, as stated above.

Grounding provisions for control signal wiring is shown in Figure 24.

Figure 24 - Vertical Ground Bus in LV Cabinet

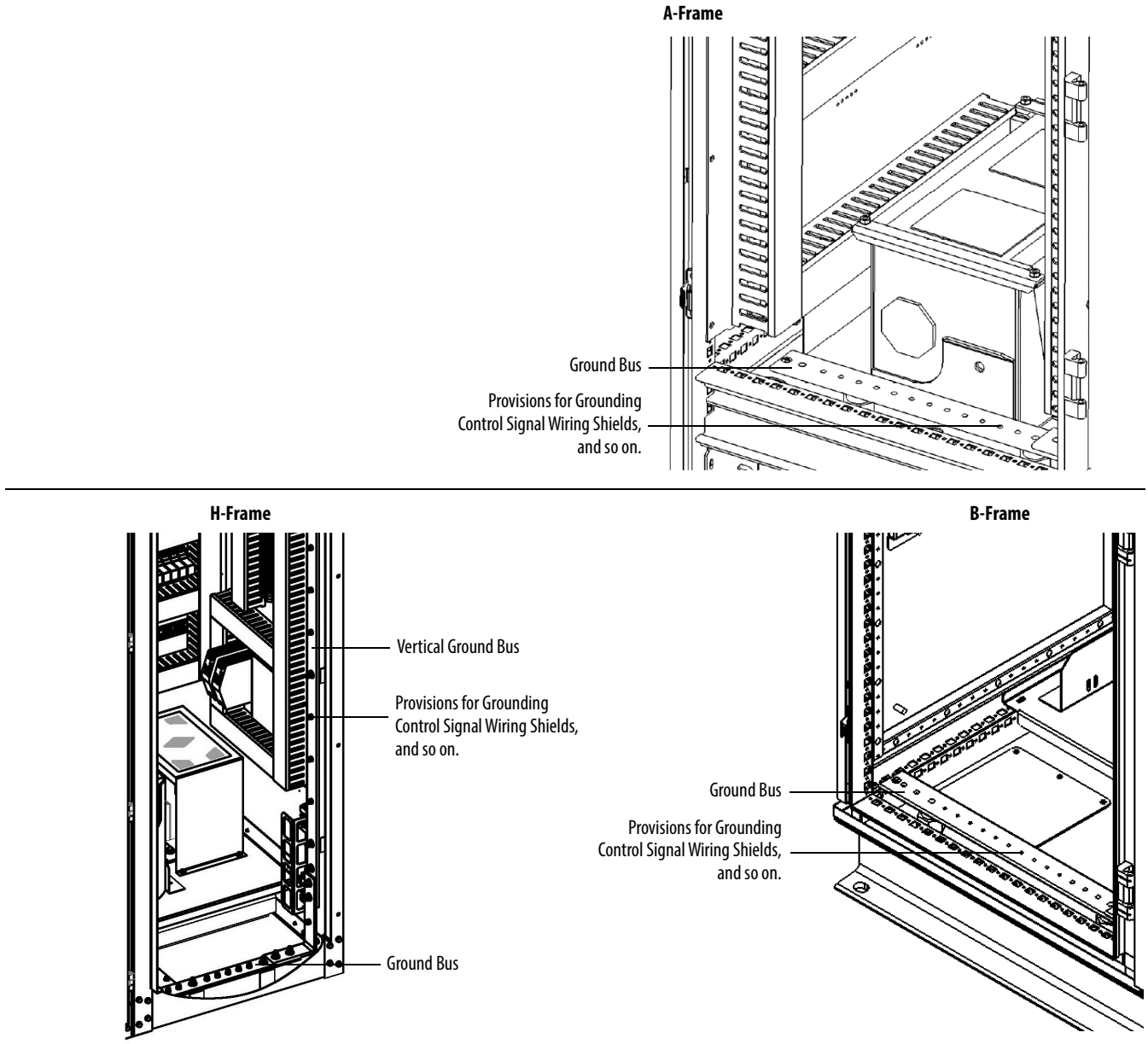

Electrical Installation Summary

Connect External Cabling and Wiring	Page
Connect the System Ground Cable	45
Insulation Resistance (IR) Test of Power Cables	46
Connect Incoming Line and Outgoing Motor Power Cables	46
Connect Control Power Wiring	51
Connect External Control Signal Wiring	53
Connect Electrical Safety Interlock Circuit to Input Circuit Breaker	54

Connect the System Ground Cable

The drive ground bus runs along the bottom of the drive at the front. The ground bus is accessible at the bottom of the front of each drive cabinet when the cabinet door is opened. Connect the system ground cable to the drive ground bus (Figure 25, Figure 26, Figure 27).

Figure 25 - Ground Cable Connection in the Isolation Transformer Cabinet, A-Frame

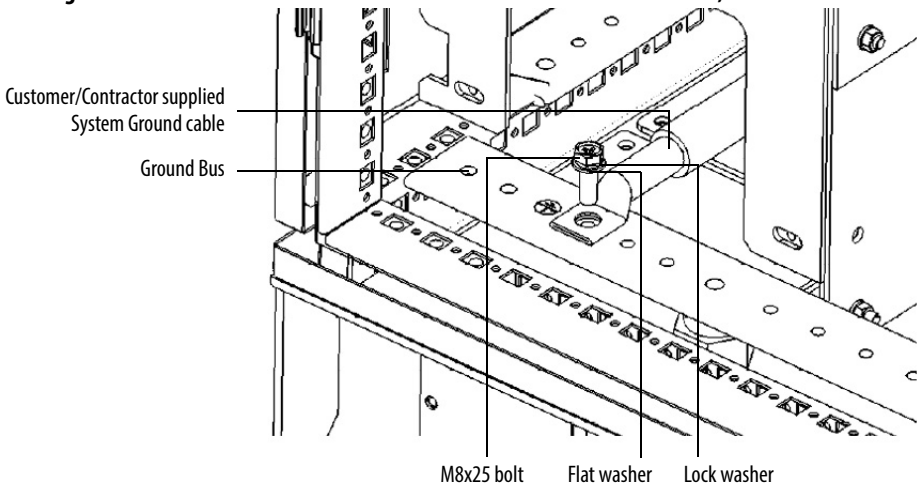

Figure 26 - Ground Cable Connection in the Isolation Transformer Cabinet, H-Frame

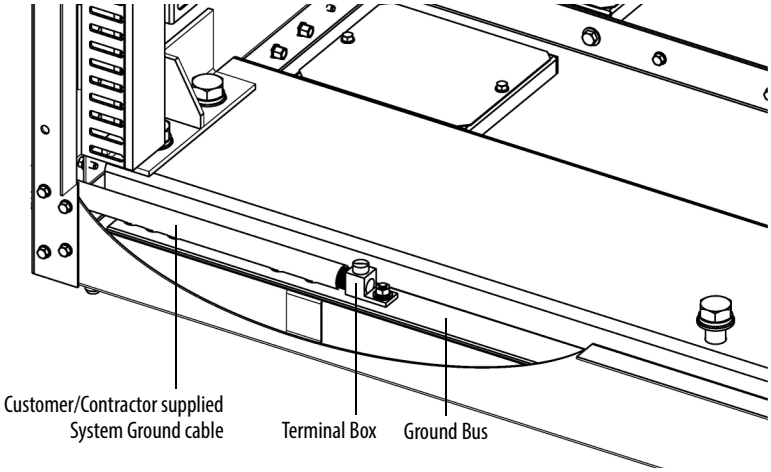

Figure 27 - Ground Cable Connection in the Isolation Transformer Cabinet, B-Frame

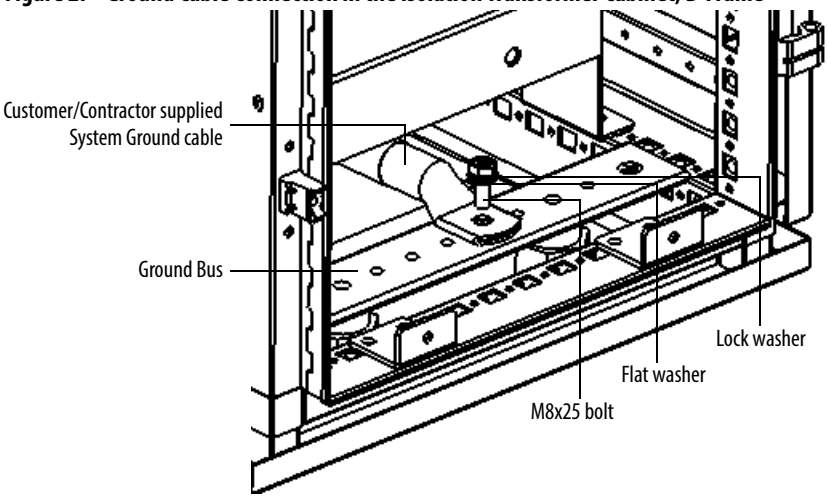

IMPORTANT If an optional cabinet is supplied, the system ground cable connection is in the optional cabinet. See the PowerFlex 6000 Medium Voltage Variable Frequency Drive User Manual, publication 6000-UM002.

Insulation Resistance (IR) Test of Power Cables

Before connecting the incoming line and outgoing motor power cables, follow standard industry practice to verify the integrity of the power cable insulation from the input breaker to the drive and from the drive to the motor.

Connect Incoming Line and Outgoing Motor Power Cables

The installer must ensure that all power connections are in accordance with national and local electrical codes.

Each drive is equipped with provisions for bottom power cable entry as standard. Provisions for top power cable entry can also be provided. This must be specified at the time of order.

For the location of incoming line and outgoing motor power cable connections, refer to the customer-specific Dimension Drawing.

The drive is supplied with the following provisions for power cable lugs.

Table 6 - Power Terminals

Incoming Line Cable Connections	L1	L2	L3
Outgoing Motor Cable Connections	U	V	W

Connect Cables for A-Frame Drives

For A-Frame drives, Figure 28, shows typical connection points for the primary entrance/exit cable.

IMPORTANT If a filter cabinet is supplied, the incoming line cables are from Junction cabinet and outgoing motor cable connections are in the filter cabinet (see Figure 29). See the PowerFlex 6000 Medium Voltage Variable Frequency Drive User Manual, publication 6000-UM002.

1. Connect the three-phase medium voltage inputs L1, L2, and L3 for top or bottom entry to the user-provided input three-phase AC power.

   IMPORTANT Cable entry and exit cable holes should be sealed.

2. Connect three-phase medium voltage inputs U, V, and W for top or bottom entry to the user-provided three-phase asynchronous motor.
3. Cable clamps are provided in the cabinet to aid in routing and supporting the incoming line and outgoing motor power cables.

Remove Barrier for Bottom Entry Connections

If you choose to connect the cables through the bottom entry of the A-Frame drive, you have to remove the insulation barrier before you proceed.

1. Remove the three plastic M6x25 bolts that secure the removable insulation barrier.
2. Pull out the removable barrier.
3. Connect the cables.
4. Install the removable barrier in the reverse order of removal.

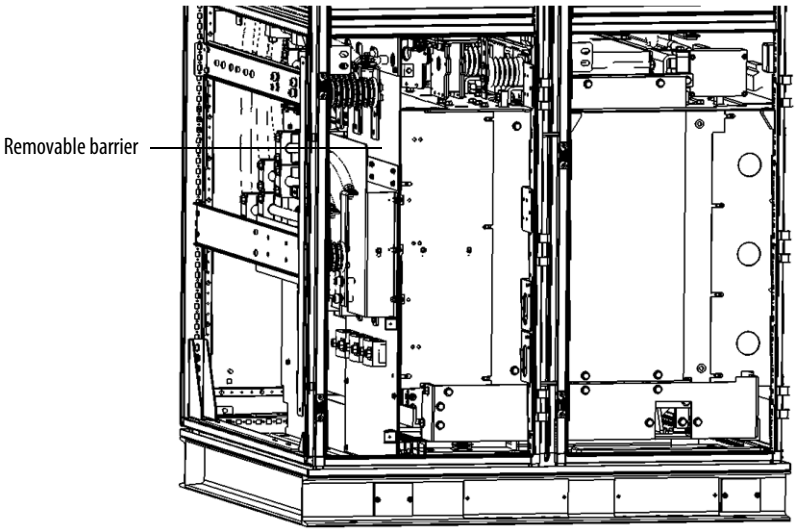

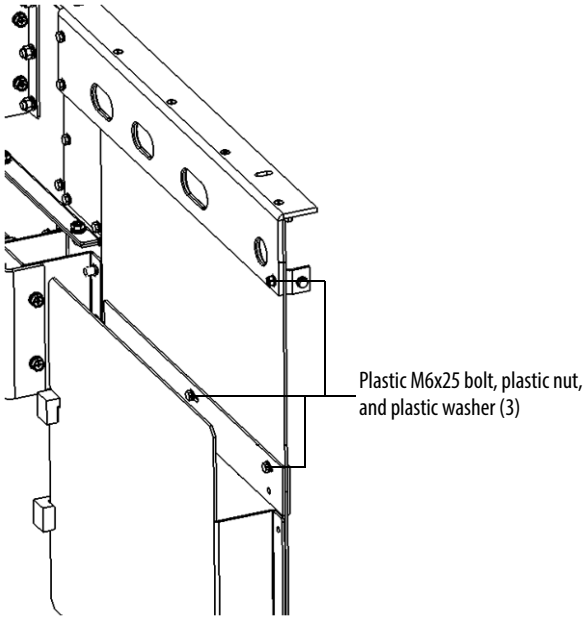

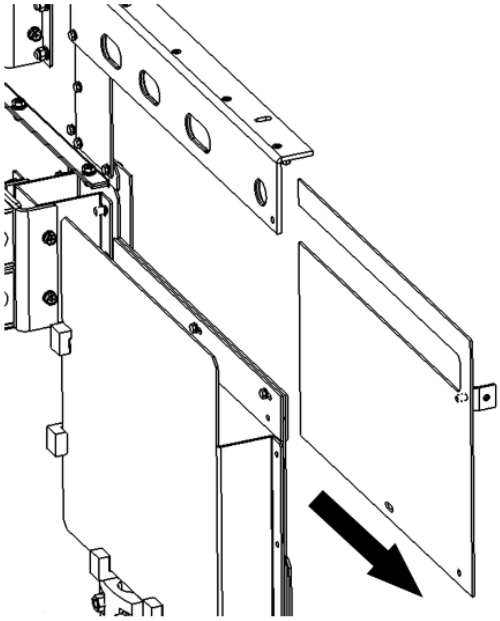

Figure 28 - Isolation Transformer Cabinet, A-Frame (DV/DT cabinet not applied)

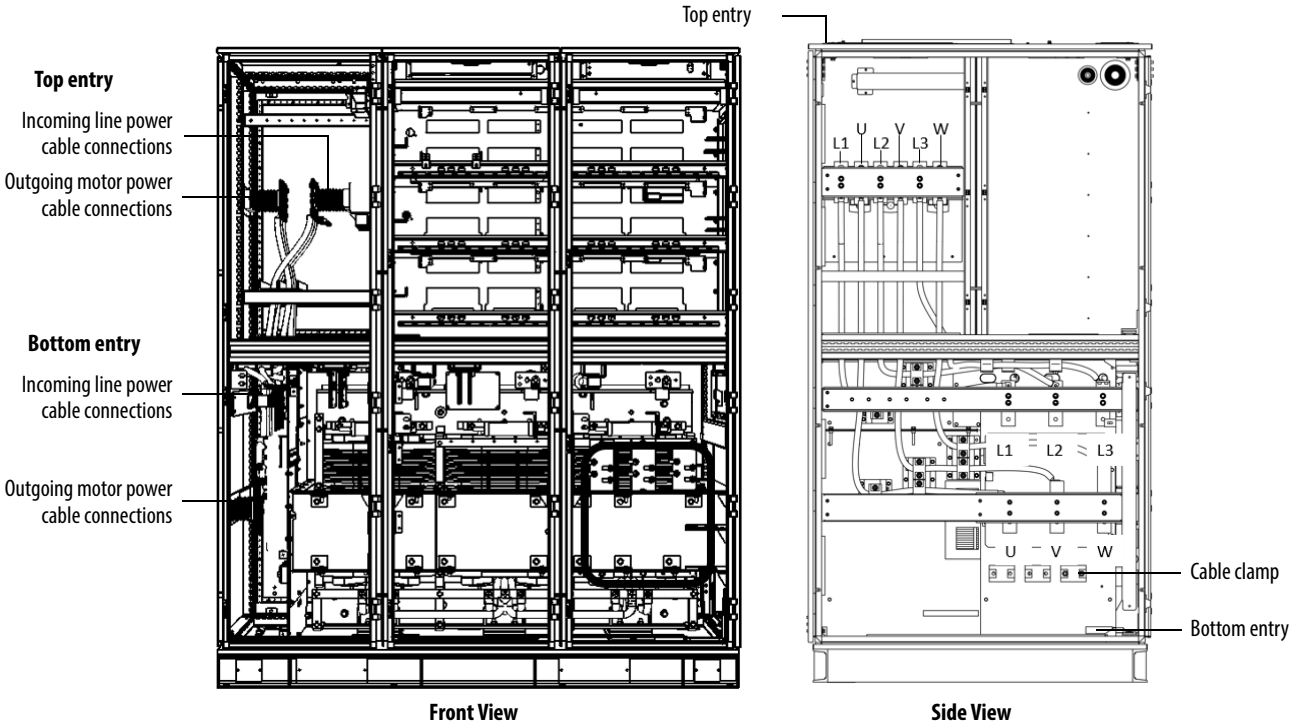

Figure 29 - Isolation Transformer Cabinet, A-Frame (DV/DT filter cabinet applied)

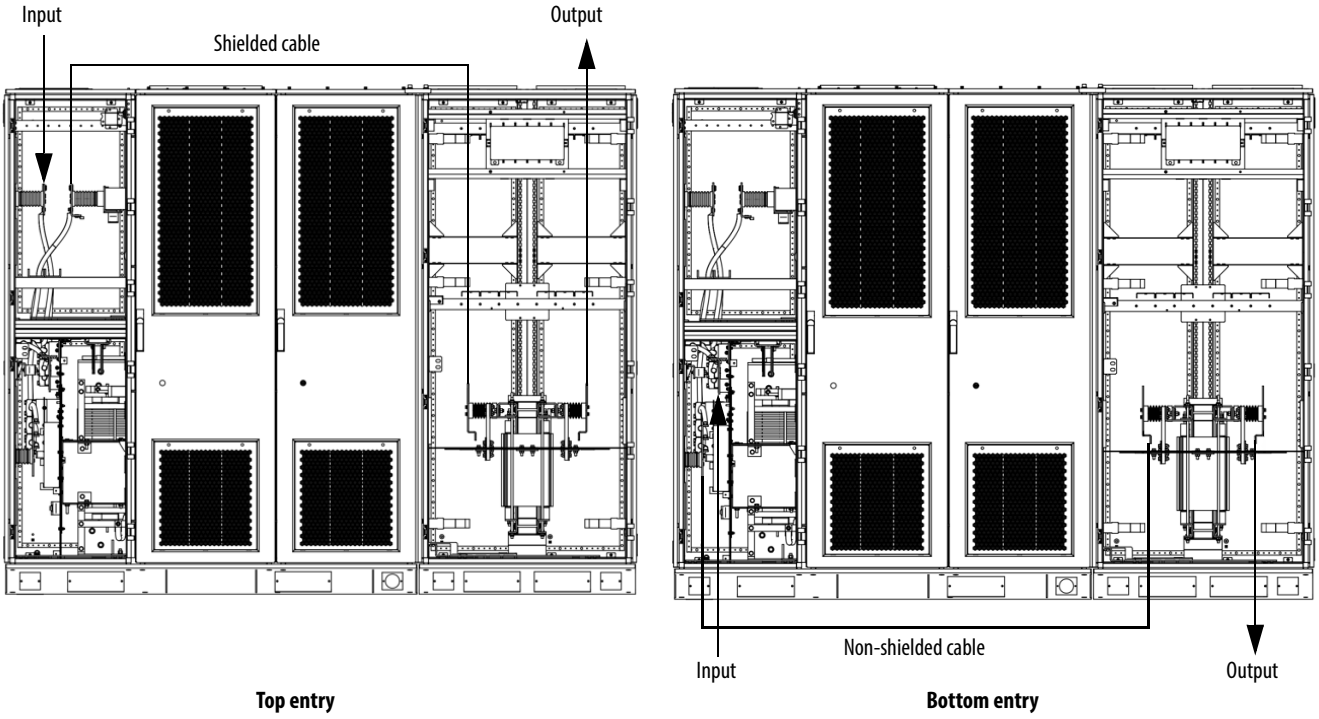

Connect Cables for H-Frame and B-Frame Drives

For H-Frame and B-Frame drives, Figure 30, Figure 31, and Figure 32 show typical connection points for the primary entrance/exit cable.

IMPORTANT If an optional cabinet is supplied, the incoming line and outgoing motor cable connections are in the Bypass cabinet. See the PowerFlex 6000 Medium Voltage Variable Frequency Drive User Manual, publication 6000-UM002.

1. Connect the three-phase medium voltage inputs L1, L2, and L3 to the user-provided input three-phase AC power.
2. Connect three-phase medium voltage inputs U, V, and W to the user-provided three-phase asynchronous motor.
3. Cable clamps are provided in the cabinet to aid in routing and supporting the incoming line and outgoing motor power cables.

Figure 30 - Isolation Transformer Cabinet, H-Frame (Junction cabinet not applied)

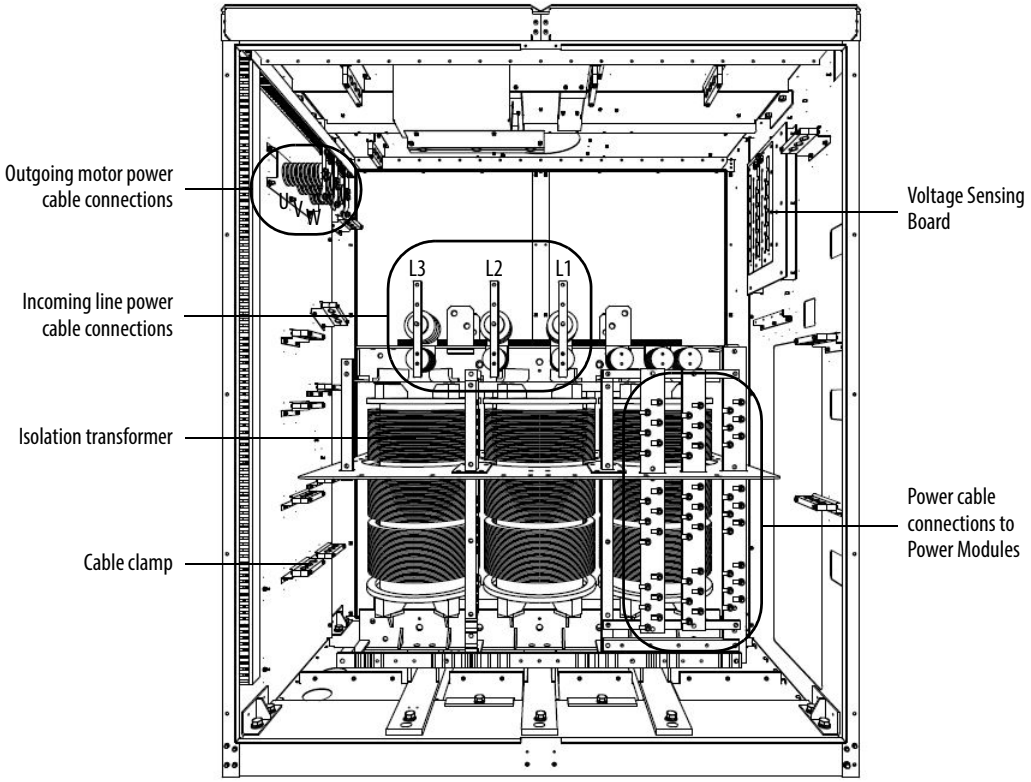

Figure 31 - Isolation Transformer Cabinet, B-Frame (Junction cabinet not applied)

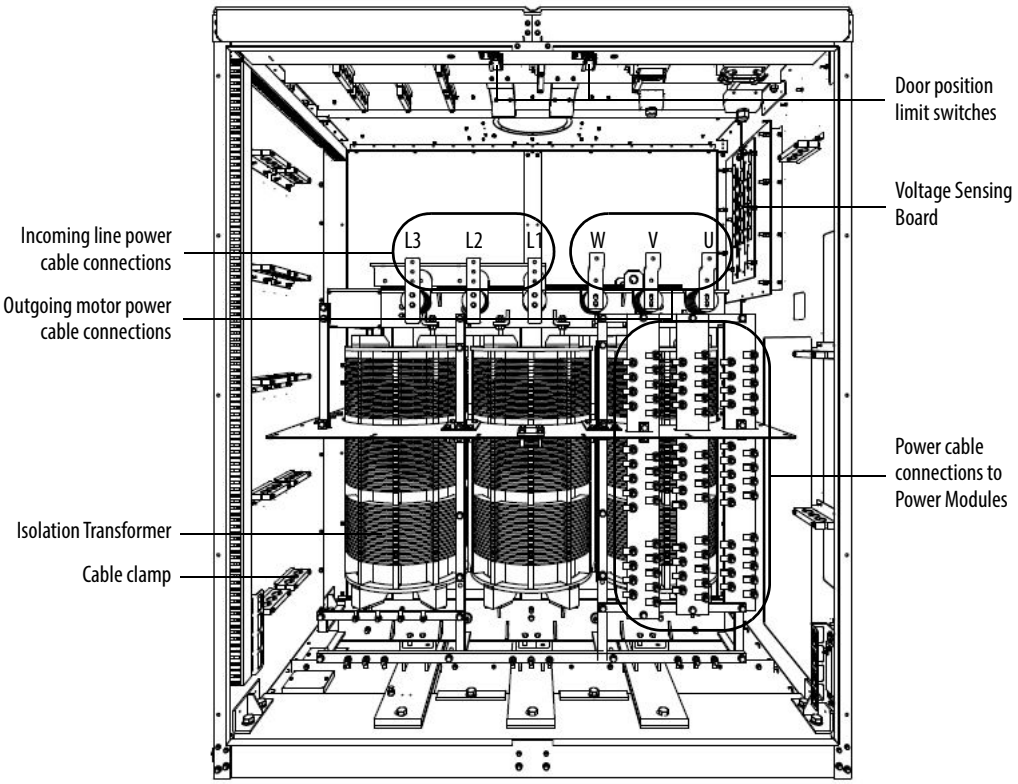

Figure 32 - Isolation Transformer Cabinet, B-Frame (Junction cabinet applied for cable connection)

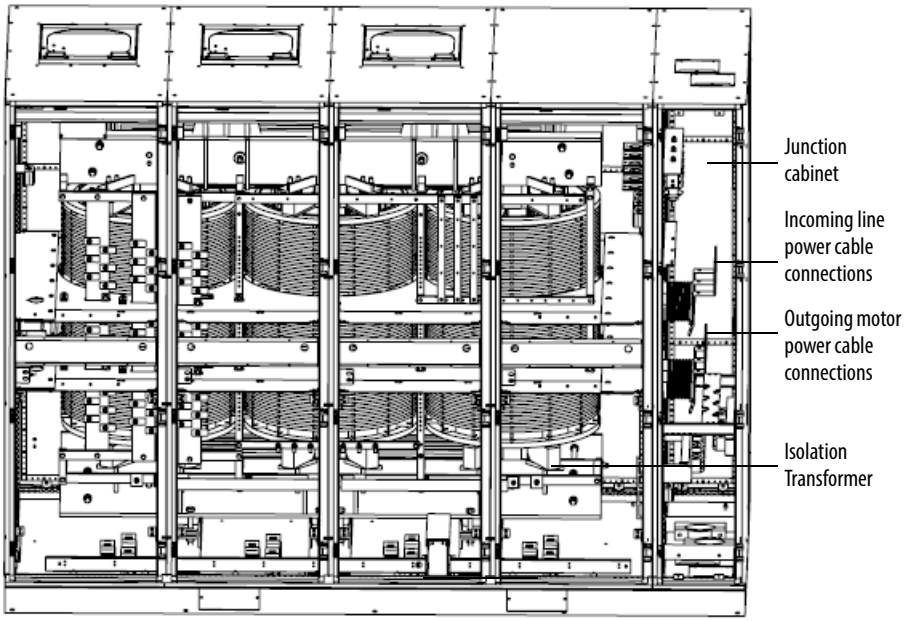

Front View

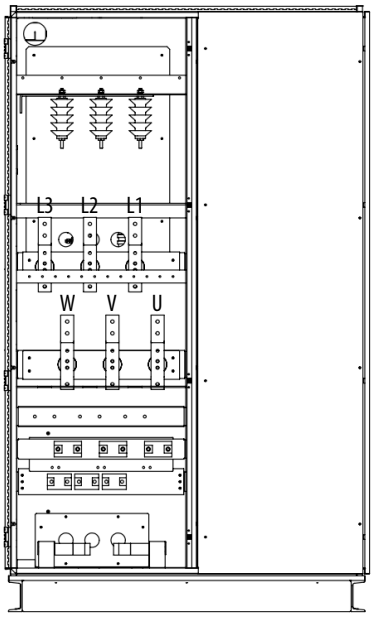

Side View

Connect Control Power Wiring

Introduction

Externally supplied control power is required to operate the drive. The standard voltage that is supported is 220V AC/50 Hz. The other typical phase voltages of 230V AC, 110V AC, and 120V AC are also supported (50/60 Hz), but must be specified at the time of order. A minimum of 3 kVA is required to supply the control circuit.

Wiring Routing and Connection

The opening for the control power wiring must be specified during the quotation stage. See the customer-specific Dimension Drawing for the location of the opening. The typical top/bottom entry design is shown below (Figure 34).

Figure 33 - Control Power Wiring Opening, A-Frame

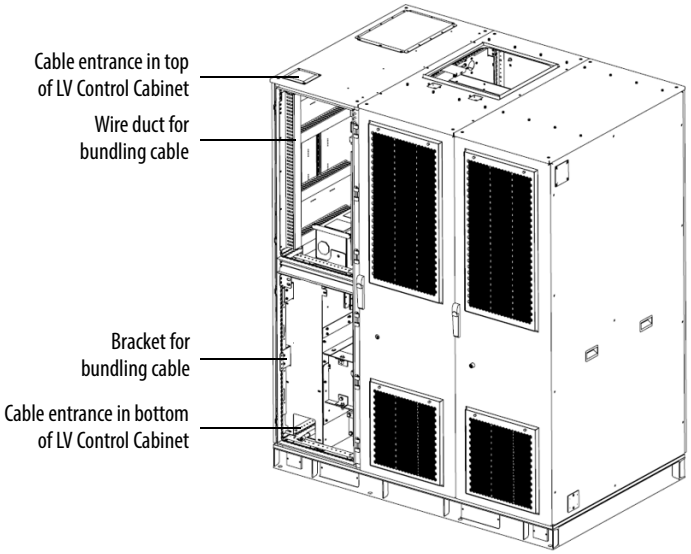

Figure 34 - Control Power Wiring Opening, H-Frame

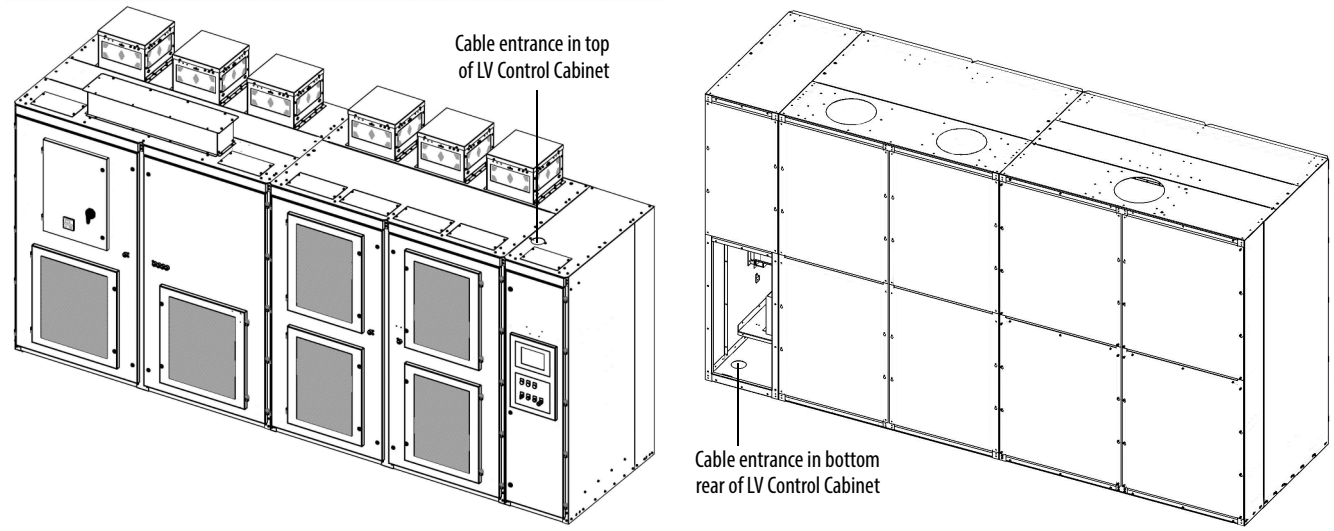

Top Entry Design **Bottom Entry Design**

Figure 35 - Control Power Wiring Opening, B-Frame

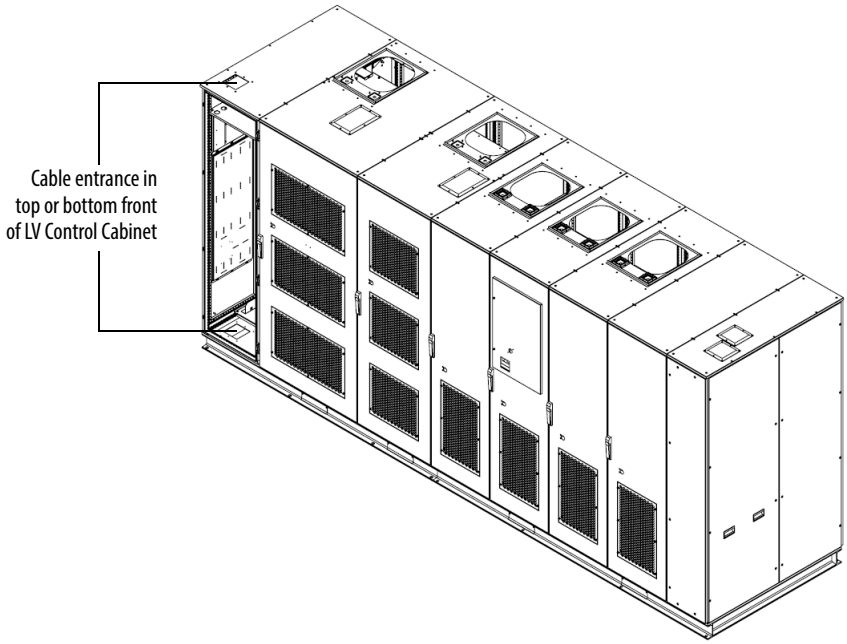

The control power wiring terminates to the DTB1 terminal block strip on the left side of the LV Control cabinet (Figure 36). See Figure 45 or Figure 46 for general overview. See Electrical Drawings for actual connection points.

Figure 36 - Terminal Block Strip locations

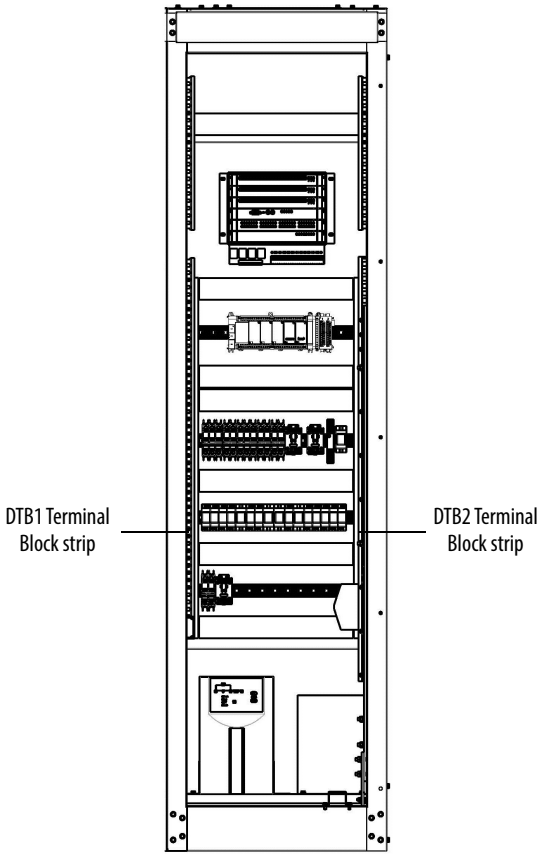

Connect External Control Signal Wiring

Introduction

This section summarizes the control signal wiring from the remote DCS/PLC or discrete control to the drive. General connections are detailed in Power Cabling and Control Signal Wiring Details on page 73. Refer to the Electrical Drawings for connection information specific See the drive being installed.

Analog and Digital I/O Overview

Four 4...20 mA analog input signals. One may be used for DCS with rotating speed setting and three for backup. For detailed information, see Table 15 and Table 16 on page 76.

Two 4...20 mA analog output signals for indication signals such as output motor current and frequency. See Table 15 and Table 16 on page 76.

Sixteen passive dry contact inputs (internal 24V DC power supply) start/stop and reset controls. For detailed information, see Table 15 and Table 16 on page 76. These inputs are scalable depending on user requirements.

Twenty dry contact outputs: including nine active dry contact outputs with a capacity of not more than 20W for indication (backup), and 11 passive dry contact outputs powered by the drive with a capacity of 220V AC/5A for DCS status/fault indication. For detailed information, see Table 15 and Table 16 on page 76. These outputs are scalable depending on user requirements.

The drive is provided with dry contact outputs (1 N.O. with a capacity of 220V AC/5 A, valid when closed) which trigger the user-provided medium voltage circuit breaker for interlock with the user-provided medium voltage switch cabinet. For detailed information, see Table 15 and Table 16 on page 76.

Modbus RTU interface is supplied as standard (other communication interfaces including Modbus TCP, Modbus Plus, EtherNet/IP™, and PROFIBUS are provided as options). For detailed information, see Figure 46 on page 75.

Wiring Routing and Connection

The control signal wiring enters the drive through the same opening as the control power wiring in the LV Control Cabinet (Figure 34 or Figure 35).

The wiring terminates either to the DTB1 or DTB2 terminal block strips on either side of the LV Control cabinet (Figure 36). See Figure 45 or Figure 46 for general information. See Electrical Drawings for actual connection points.

Connect Electrical Safety Interlock Circuit to Input Circuit Breaker

Introduction

The electrical safety interlock circuit is part of the overall control signal wiring activity. However, it is mentioned separately in this document due to its critical importance related to the safe operation of the drive and personnel safety.

The circuits that are connected between the drive and the input circuit breaker:

- allow the drive to trip the input circuit breaker if a drive cabinet door is opened. This applies to the cabinet doors where medium voltage is present. The LV Control cabinet door can be opened while the drive is energized.
- allow the drive to prevent the input circuit breaker from closing when required.
- indicate to the drive when the input circuit breaker is closed.

MV Door Safety Interlock

If the MV cabinet door is opened, the Allen-Bradley Guardmaster® Limit Switch (440P-CRPS11D4B) on the cabinet door will actuate. The drive will send a trip signal to the input circuit breaker to disconnect the medium voltage power supply to the drive.

ATTENTION: The door position interlock is a safety feature. It must not be used solely as a part of the plant operation process to ensure that the drive has been disconnected from input medium voltage. Keep the medium voltage doors locked as standard practice. Always go to the input circuit breaker feeding the drive to verify if it is open. Lock out and tagout the input circuit breaker before performing any work on the drive or bypass units.

Figure 37 - Interlock for Cabinet Doors

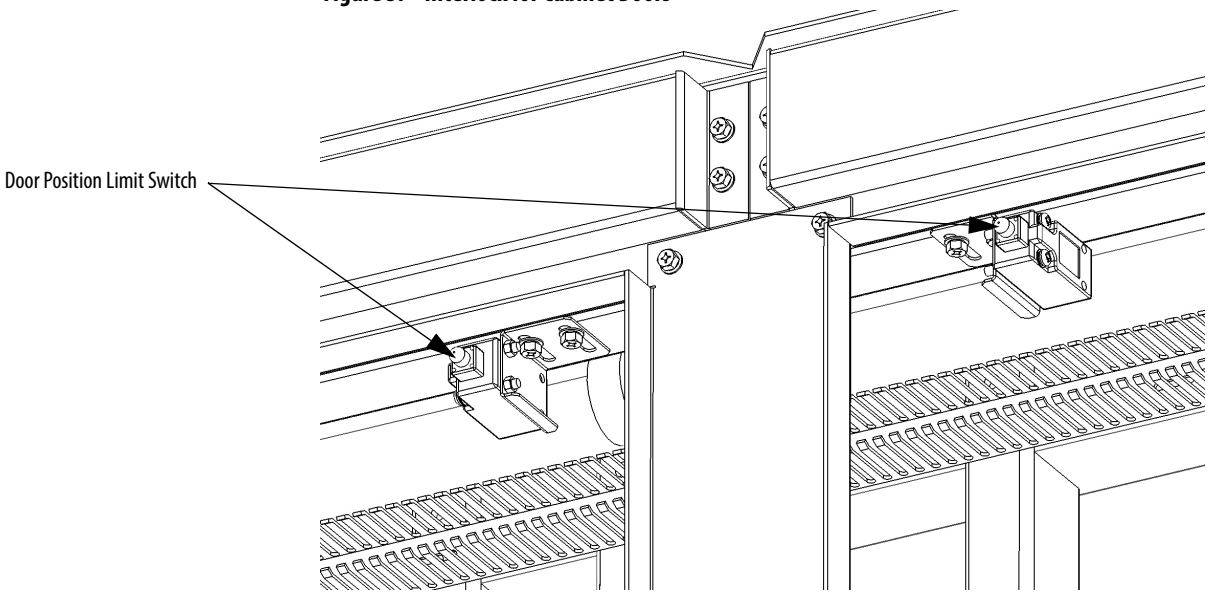

When the doors of the Power Module/LV Control Cabinet or Isolation Transformer Cabinet are not closed, when the drive is being maintained or when the control power switch is not closed, the drive will not send a signal allowing the input circuit breaker to close; this is wired as a permissive contact in the input circuit breaker's closing circuit so that the input circuit breaker cannot close.

Wire Routing and Connection

The electrical safety interlock control signal wiring enters the drive through the same opening as the control power wiring in the bottom of the LV Control Cabinet (Figure 34 or Figure 35).

The wiring terminates to the X1 terminal block strip on the right side of the LV Control cabinet (Figure 36). See Figure 45 or Figure 46 for general information. See Electrical Drawings for actual connection points.

Notes:

Drive Electrical Interconnection

Introduction

The drive is shipped in two sections, the Isolation Transformer cabinet and the Power Module/LV Control cabinet. An optional cabinet may also be supplied. Drive Mechanical Installation on page 11 describes mechanically joining these cabinets together. This chapter describes the activities that are required to electrically connect these drive cabinets' components together.

Electrical Interconnection Summary

Power Cable Interconnection Overview

Figure 38 provides a three-line drawing overview of the power cable interconnections between the power modules (PC XX) in the Power Module/LV Control cabinet and the secondary windings of the isolation transformer in the Isolation Transformer cabinet. The number of power modules is dependent solely on output (motor) voltage:

- 9 power modules for 2.3/2.4/3.0/3.3 kV
- 12 power modules for 4.0/4.16 kV
- 15 power modules for 6.0 kV
- 18 power modules for 6.6/6.9 kV
- 24 power modules for 10 kV
- 27 power modules for 11 kV

It also shows the connection point from the U, V, and W motor output phases from the power module array to the voltage sensing board cables and the motor cables.

The isolation transformer secondary windings as shown do reflect the actual orientation on the isolation transformer.

The Power Module/LV Cabinet orientation is optimized for drawing clarity. To better understand the physical orientation, the components and connections that are shown in the Power Module/LV Control Cabinet would be rotated 90° counter clockwise. The U phase is the top horizontal row, the V phase is the middle horizontal row, and the W phase is the bottom horizontal row.

See the Electrical Drawing for actual wire number designations.

Figure 38 - Power Cabling Overview (3.3 kV shown)

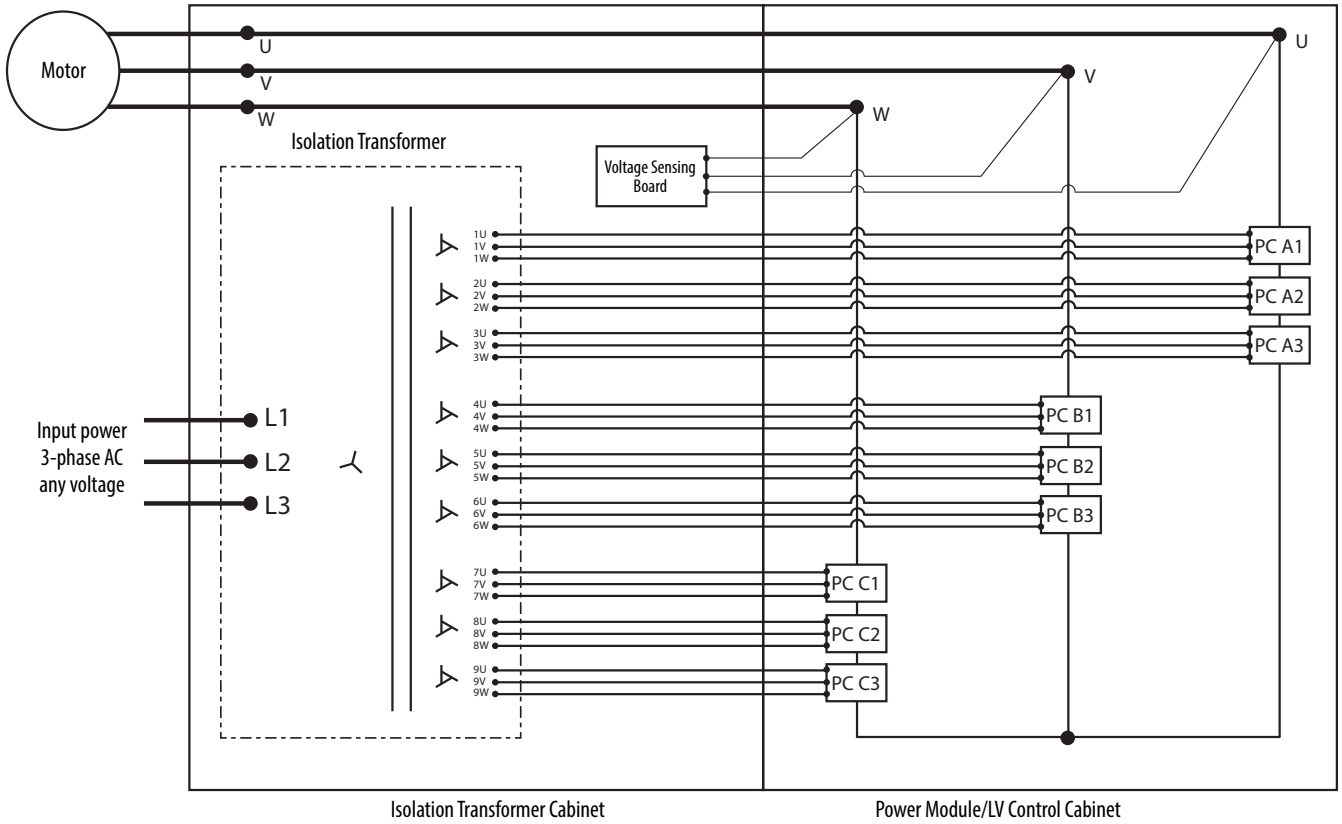

Connect Isolation Transformer Secondary Power Cables

Introduction

The isolation transformer's three-phase primary coils are oriented A, B, and C from left to right, as viewed from the front. The secondary windings are also divided into three principal sections from top to bottom. The upper third are to feed the power modules in the U output phase. The middle third are to feed the power modules in the V output phase. The bottom third are to feed the power modules in the W output phase (Figure 39).

Figure 39 - Isolation Transformer Primary and Secondary Winding Orientation

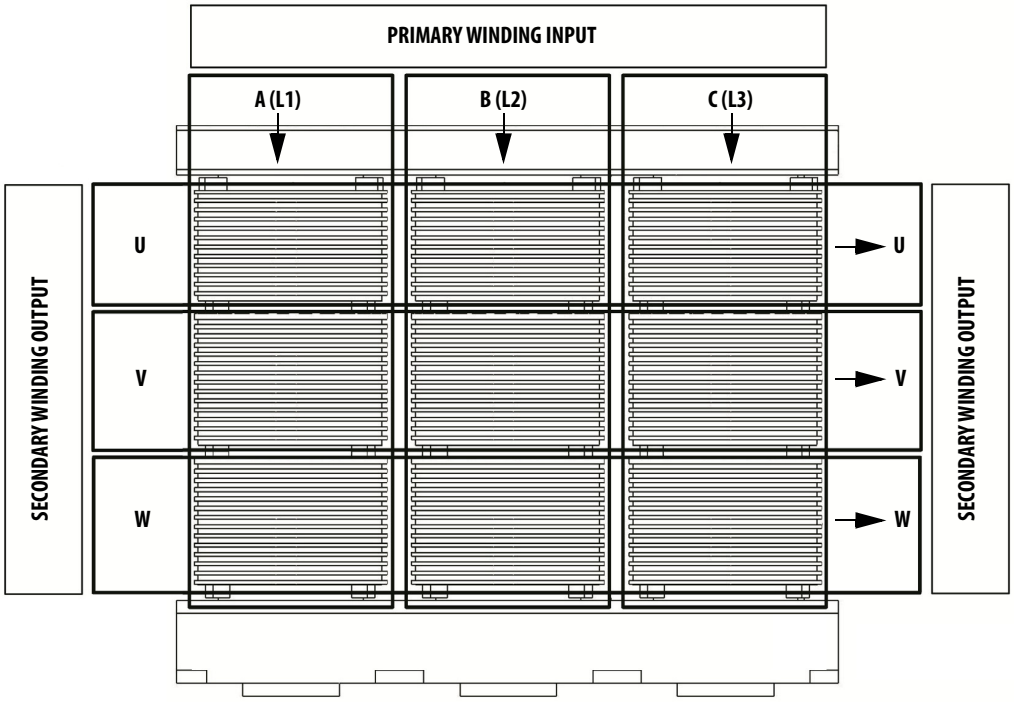

The secondary windings are brought out to corresponding vertical isolated stand-offs on the body of the transformer (orientated U, V, and W from left to right as viewed from the front). See Figure 40.

Each secondary winding set will have a designated U, V, and W terminal connection. For example, (from top to bottom and left to right) the terminals from the first winding set are 1W, 1V, and 1U, the terminals from the next winding set are 2W, 2V, and 2U, and so on.

As shown in Figure 38, the first winding set (1U, 1V, and 1W) will connect to the three-phase input power connection of the first power module in the U motor phase array (PCA1), the second winding set will connect to the second power module in the U motor phase array (PCA2), and the third winding set will connect to the third power module in the U motor phase array (PCA3). The next three winding sets connect to the power modules in the V motor phase array. The remaining three winding sets connect to the power modules in the W motor phase array.

Figure 38 shows 3.0/3.3 kV configuration. The 6.0/6.6 kV and 10 kV configuration have more power modules and therefore have more corresponding isolation transformer secondary windings. The concept is the same—the top third of the winding sets feeds the power modules in the U phase, the middle third feeds the power modules in the V phase, and the bottom third feeds the power modules in the W phase.

Each three-phase secondary winding set of the isolation transformer has three individual single-phase power cables connecting its output to the three-phase power input of its corresponding power module.

Drives are shipped split with an Isolation Transformer cabinet and a Power Module cabinet, and connection at the site is needed. The power cables connect to the secondary winding termination in the Isolation Transformer. All cables can be connected from the front of the cabinet.

Cable Routing and Connection

Figure 40 - 6.0/6.6 kV Power Module Configuration

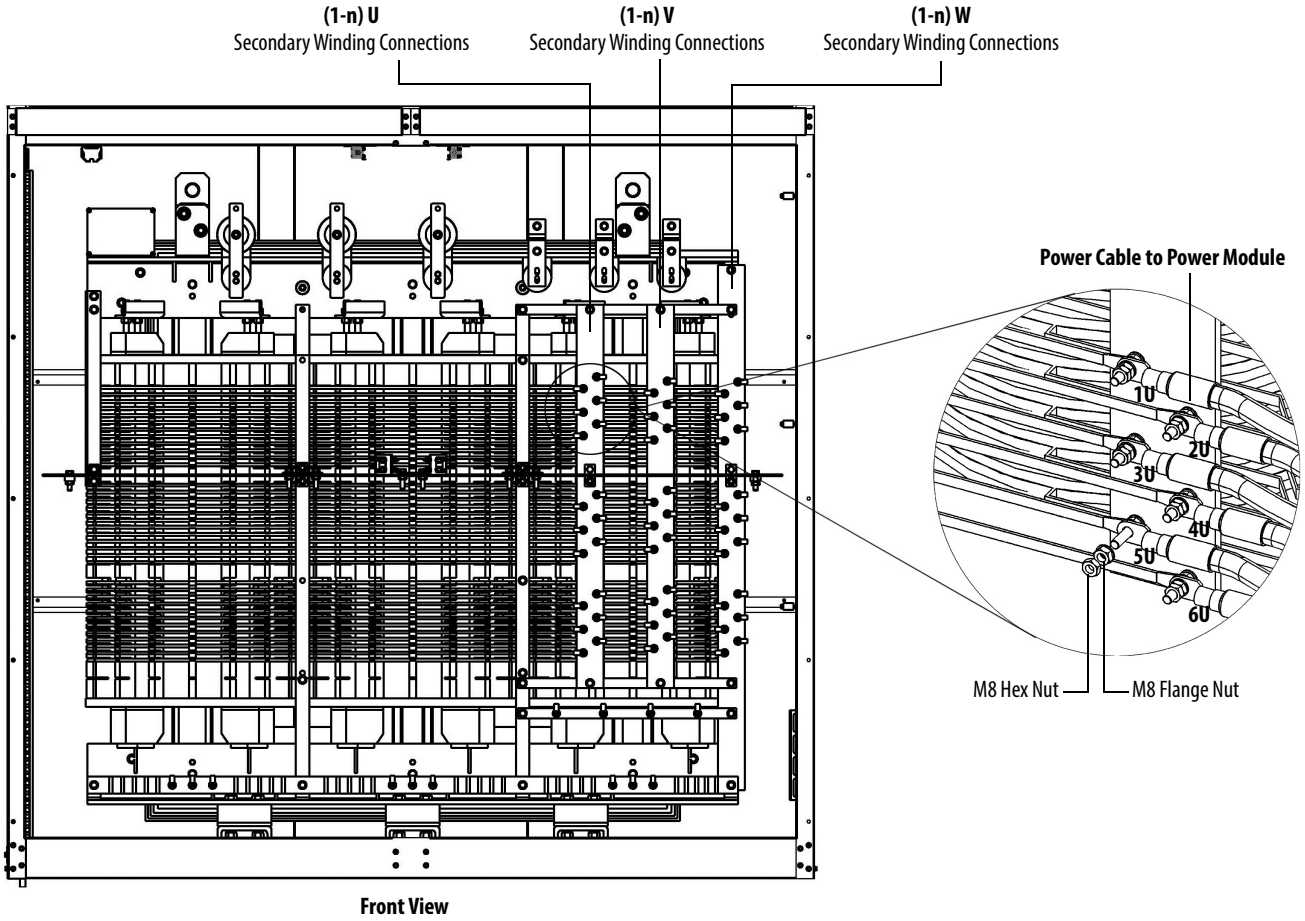

Connect Motor and Voltage Sensing Board Cables

Introduction

The Voltage Sensing Board cables and the motor cables both connect to the same output point of each motor phase array (Figure 38). The voltage sensing cables must be connected on site.

For drive ratings with power modules ≥250 A, the connection points are always on the right side of the power module cabinet. For drive ratings with power modules ≤200 A, the connection points are on the left side of the power module cabinet.

A typical connection with connection points on the left side of the power module cabinet are shown in the following diagrams (Figure 41, Figure 42).

Figure 41 - 4.16 kV Power Module Configuration – A-Frame

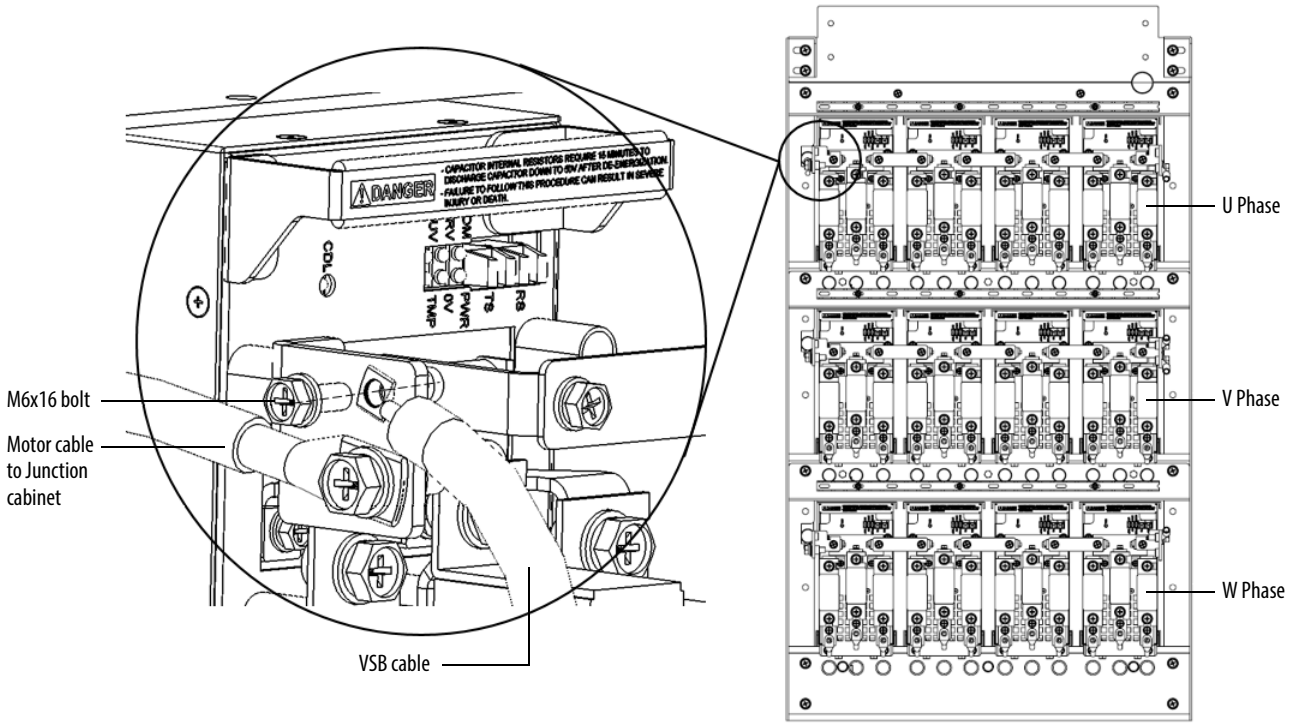

Front View

Figure 42 - 6.6/6.9 kV Power Module Configuration – H-Frame and B-Frame

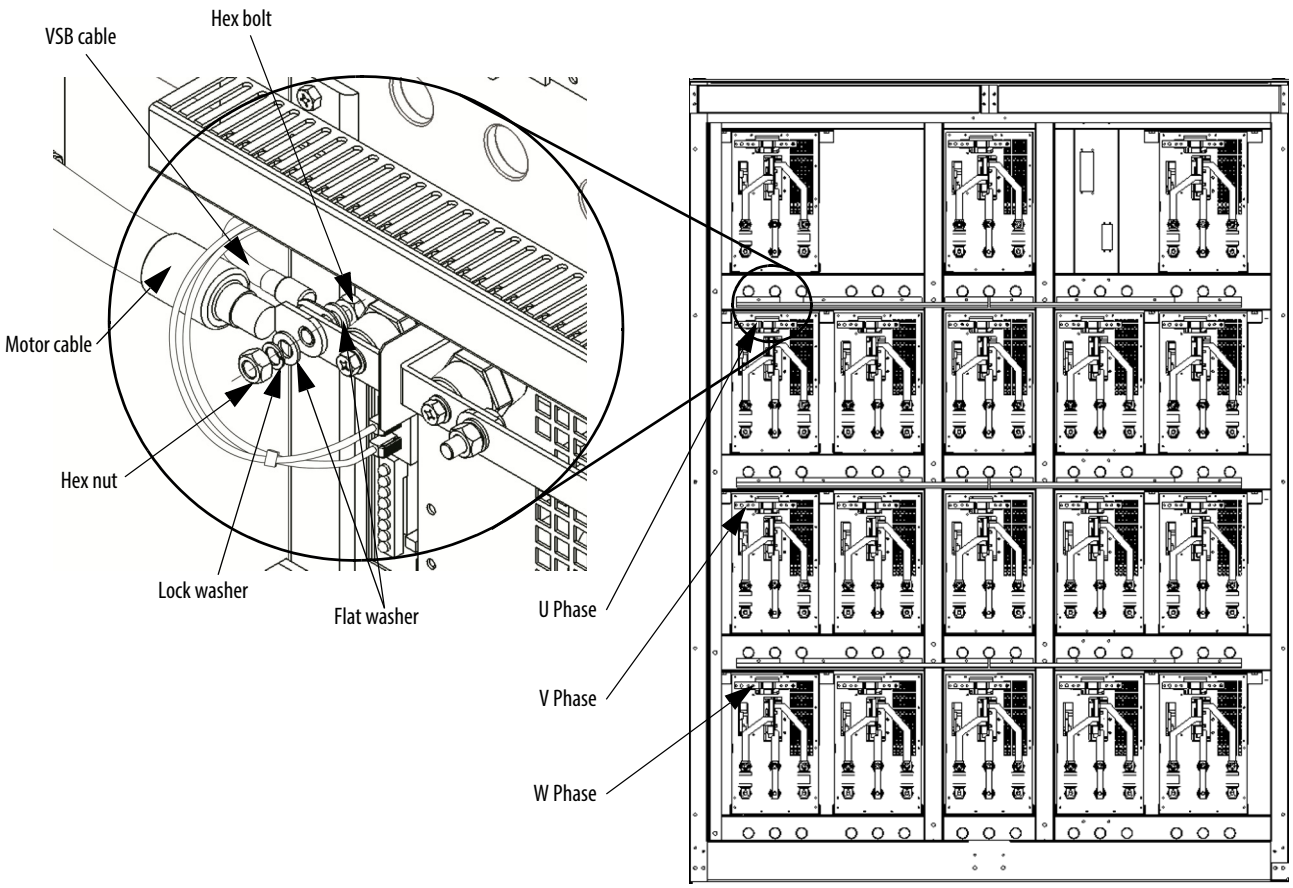

Front View

Connect LV Control and Fan Wiring Bundles

Introduction

There are control wiring bundles that must be reconnected after the drive cabinets are connected together. These control wiring bundles are connected for the factory test and then disconnected and bundled at the shipping splits before shipment.

For exact wire numbers and terminal block designations, refer to the Electrical Drawings.

Connect Ground Bus

Introduction

A solid ground bus is located at the bottom front of each cabinet. When a shipping split is required, ground bus connectors are supplied. One is attached above the solid ground bus and one below (Figure 43).

Ground bus connection openings are provided in the cabinet sidesheets for this connection. See Table 1 on page 14 and Table 2 on page 15.

Figure 43 - Interconnection Ground

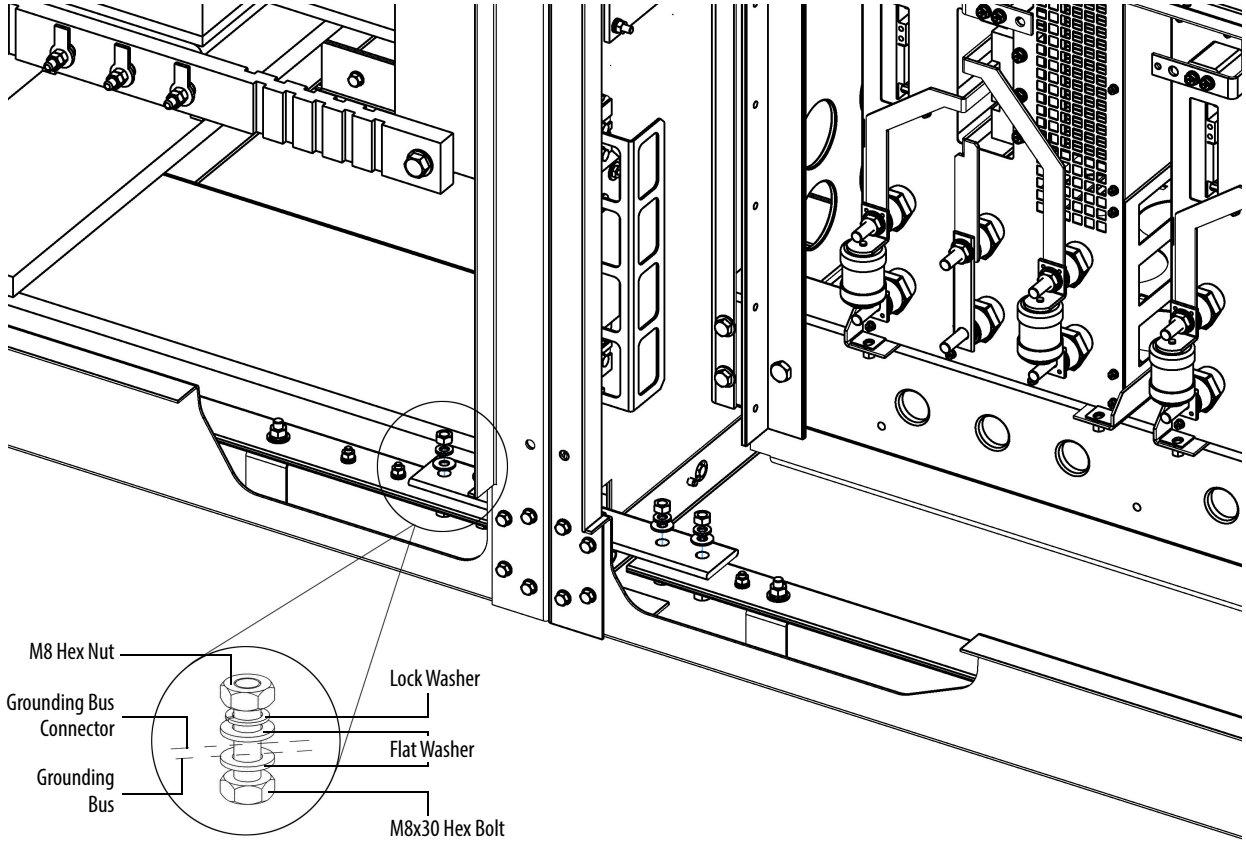

Complete the Installation

1. Inspect the interior of all cabinets carefully for hardware or tools that may have been misplaced.
2. Check and verify that no hardware or foreign material has fallen in the secondary windings in the Isolation Transformer cabinet.
3. Check that all mechanical work has been completed properly. All barriers and guards that may have been removed must be reinstalled.
4. Check that all electrical connections have been made and torqued as specified.
5. Verify that the safety circuit is working properly (see page 54).
6. Reinstall all cabinet back plates.

Notes:

Pre-Commissioning

Pre-Commissioning Responsibilities

Rockwell Automation manages the startup service for each installed drive at the customer's site, but there are a number of tasks the customer or its representatives must complete before scheduling Rockwell Automation personnel for drive commissioning.

Review this information before commissioning the drive as a reference for drive line-up commissioning. Record the information in the data sheets provided; these are useful during future maintenance and troubleshooting exercises.

ATTENTION: Perform the pre-commissioning tasks in the order listed in this chapter. Failure to do so may result in equipment failure or personal injury.

IMPORTANT Rockwell Automation requests a minimum of four weeks' notice to schedule each startup.

Inspection and Verification

Before the drive commissioning occurs, Rockwell Automation recommends that the customer arranges a pre-installation meeting to review:

a. the startup plan
b. the startup schedule
c. the drives installation requirements
d. the pre-commissioning checklist

Customer personnel must be on-site to participate in the system startup procedures.

See Safety and Codes on page 39.

ATTENTION: The CMOS devices that are used on the control circuit boards are susceptible to damage or destruction by static charges. Personnel working near static sensitive devices must be appropriately grounded.

Pre-Commissioning Checklist

Once all points of the checklist are complete, initial each checkbox and provide the date. Photocopy the checklist and fax the copy to the Rockwell Automation Startup Manager, along with the planned startup date. Upon receiving this checklist, the Project Manager will contact the site to finalize arrangements for a startup engineer to travel to the site at your convenience.

Print the following information:

Name:	Date:
Company:	
Phone:	Pages:
Fax:	

Drive Serial Number:	
Rockwell Automation Service Engineer Requested (YES/NO):	
Scheduled Commissioning Date:	

Table 7 - Receiving and Unpacking:

Initials	Date	Check	
			The drives have been checked for shipping damage upon receiving.
			After unpacking, the items received are verified against the bill of materials.
			Any claims for breakage or damage, whether concealed or obvious, are made to the carrier by the customer as soon as possible after receipt of shipment.
			All packing material, wedges, or braces are removed from the drive.

Table 8 - Installation and Mounting:

Initials	Date	Check	
			The drive is securely fastened in an upright position, on a level surface.
			The Isolation Transformer Cabinet, Power Module Cabinet, and Bypass Cabinet (if applicable) are correctly installed.
			Lifting Angles have been removed.
			Bolts are inserted into original location on top of drive (help prevent leakage of cooling air).
			All contactors and relays have been operated manually to verify free movement.
			The back plates to the cabinets have been reinstalled.

Table 9 - Safety:

Initials	Date	Check	
			The grounding of the drive should be in accordance with national and local electrical codes.

Table 10 - Control Wiring:

Initials	Date	Check	
			All low voltage wiring entering the drive is labeled, appropriate wiring diagrams are available, and all customer interconnections are complete.
			All AC and DC circuits are run in separate conduits.
			All wire sizes that are used are selected by observing all applicable safety and national and local electrical codes.
			Remote I/O is correctly installed and configured (if applicable).
			All 3-phase control wiring is within specified levels and has been verified for proper rotation, UVW.
			All single-phase control wiring is within specified levels and has grounded neutrals.
			Control lines must be shielded and grounded. Control and Power lines must run in separate conduits.
			The electrical safety interlock wiring to input circuit breaker is correctly installed.

Table 11 - Power Wiring:

Initials	Date	Check	
			The power cable connections to the drive, motor, and isolation transformer adhere to national and local electrical codes.
			The cable terminations, if stress cones are used, adhere to the appropriate standards.
			Appropriate cable insulation levels are adhered to, as per Rockwell Automation specifications.
			All shields for shielded cables must be grounded at the source end only.
			If shielded cables are spliced, the shield must remain continuous and insulated from ground.
			All wire sizes that are used are selected by observing all applicable safety and national and local electrical codes.
			All power connections are torqued as per Rockwell Automation specifications. Refer to Torque Requirements on page 69.
			All customer power cabling has been insulation resistance (IR) tested or hi-pot tested before connecting to drive system.
			Power wiring phase rotation has been verified per the specific electrical diagrams that are supplied by Rockwell Automation.

Table 12 - Interconnection Wiring

Initials	Date	Check	
			The power cable connection between the Isolation Transformer and Power Modules.
			The motor cable connection to the three output buses.
			The Voltage Sensing Board connections to the three output buses.
			All low voltage connections to the Isolation Transformer Low Voltage panel.

Table 13 - Drive Line-up Status

Initials	Date	Check	
			The medium voltage and low voltage power is available for startup activities.
			The motor is uncoupled from the driven load.
			The load is available for full load testing.

Torque Requirements

Torque Requirements

Proper tightening torque must be used for installation and wiring.

Table 14 - Torque Requirements

Thread Size	Torque	
	Class 8.8	
	N•m	lb•ft
M4	3.0	2.2
M5	5.9	4.4
M6	10.5	7.7
M8	26.0	19.2
M10	51.0	37.6
M12	89.0	65.7
M14	141.0	104.1
M16	215.0	158.7
M20	420.0	310.0

Notes:

General Wire Categories

General Wire Categories

Conductors Category	Conductors Group	Machine With	Signal Examples	Recommended Cable	Conductors Group	Power Supplies mm (in.)	Control mm (in.)	To PLC
Power Supplies	1	AC power supply (TO 600V AC)	220V, 1Ø	Per IEC / NEC, Local codes and application requirements	Tray	228.6 (9.00)	152.4 (6.00)	All signal wiring must be run in separate steel conduit. A wire tray is not suitable. The minimum spacing between conduits containing different wire groups is 76.2 mm (3 in.).
Control	2	220V AC or 220V DC Logic	Relay Logic PLC I/O	Per IEC / NEC, Local codes and application requirements	Tray	228.6 (9.00)	152.4 (6.00)	
	3	24V AC or 24V DC logic	PLC I/O	Per IEC / NEC, Local codes and application requirements	Tray	228.6 (9.00)	152.4 (6.00)	
To PLC	4	Analog Signal DC supply	5...24V DC Supplies	Belden 8760(1) Belden 8770(2) Belden 9460(3)	All signal wiring must be run in separate steel conduit. A wire tray is not suitable. The minimum spacing between conduits containing different wire groups is 76.2 mm (3 in.).			
	5	Digital circuit (high speed)	Pulse train input tachometer PLC communication	Belden 8760(1) Belden 9460(3) Belden 9463(4)				

(1) 18 AWG, twisted-pair, shielded

(2) 18 AWG, 3 conductor, shielded

(3) 18 AWG, twisted-pair, shielded

(4) 24 AWG, twisted-pair, shielded

Notes:

Power Cabling and Control Signal Wiring Details

Schematic Diagrams

Figure 44 - Schematic Diagram of the Drive System without a Bypass Cabinet, A-Frame(1)

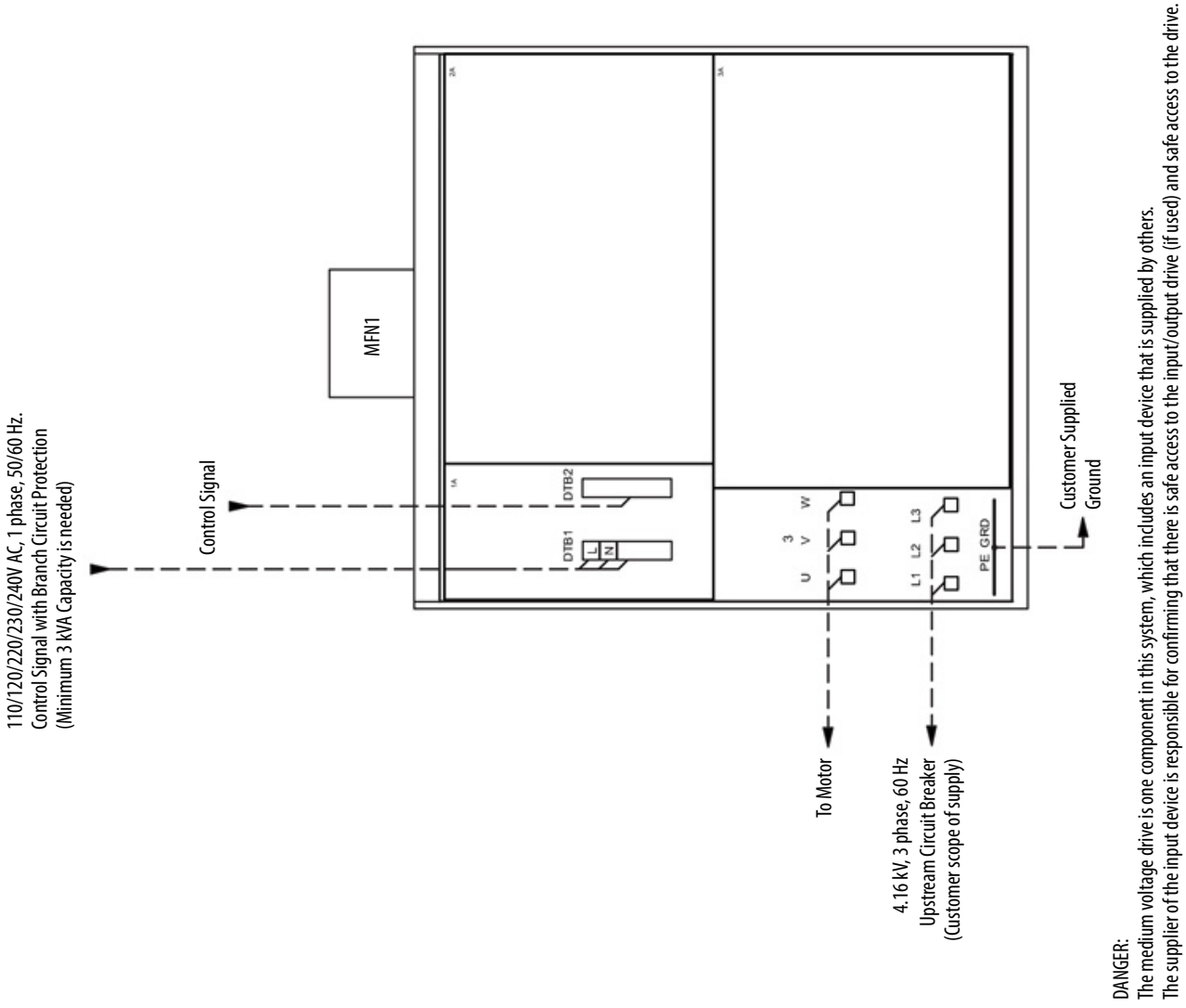

(1) Wiring locations are for design reference only; actual wiring must comply with the drawings that are provided with the drive.

Figure 45 - Schematic Diagram of the Drive System without a Bypass Cabinet, H-Frame[1]

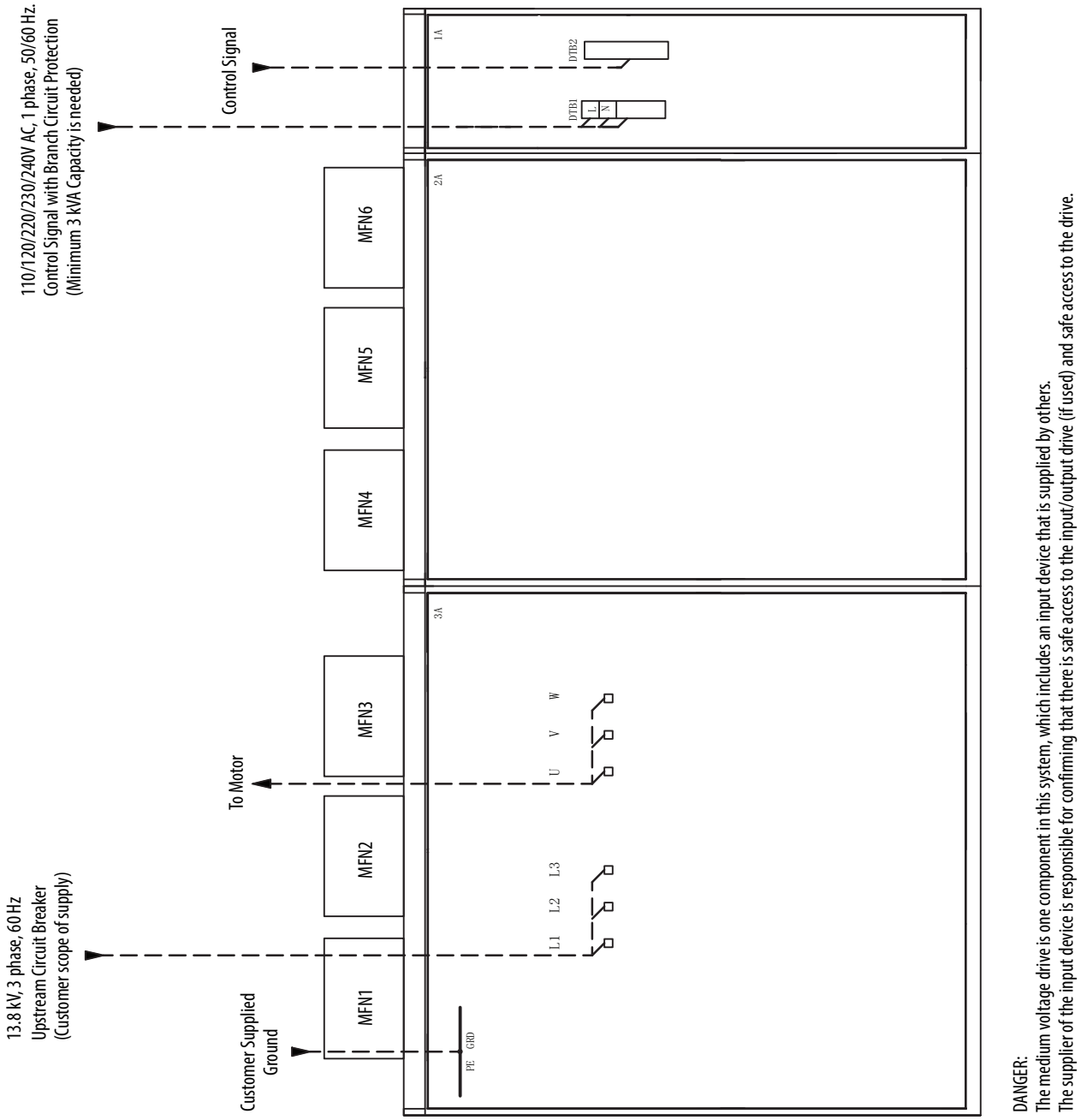

DANGER:
The medium voltage drive is one component in this system, which includes an input device that is supplied by others.
The supplier of the input device is responsible for confirming that there is safe access to the input/output drive (if used) and safe access to the drive.

(1) Wiring locations are for design reference only; actual wiring must comply with the drawings that are provided with the drive.

Figure 46 - Terminal Strip Wiring Diagram for Drive System without a Bypass Cabinet

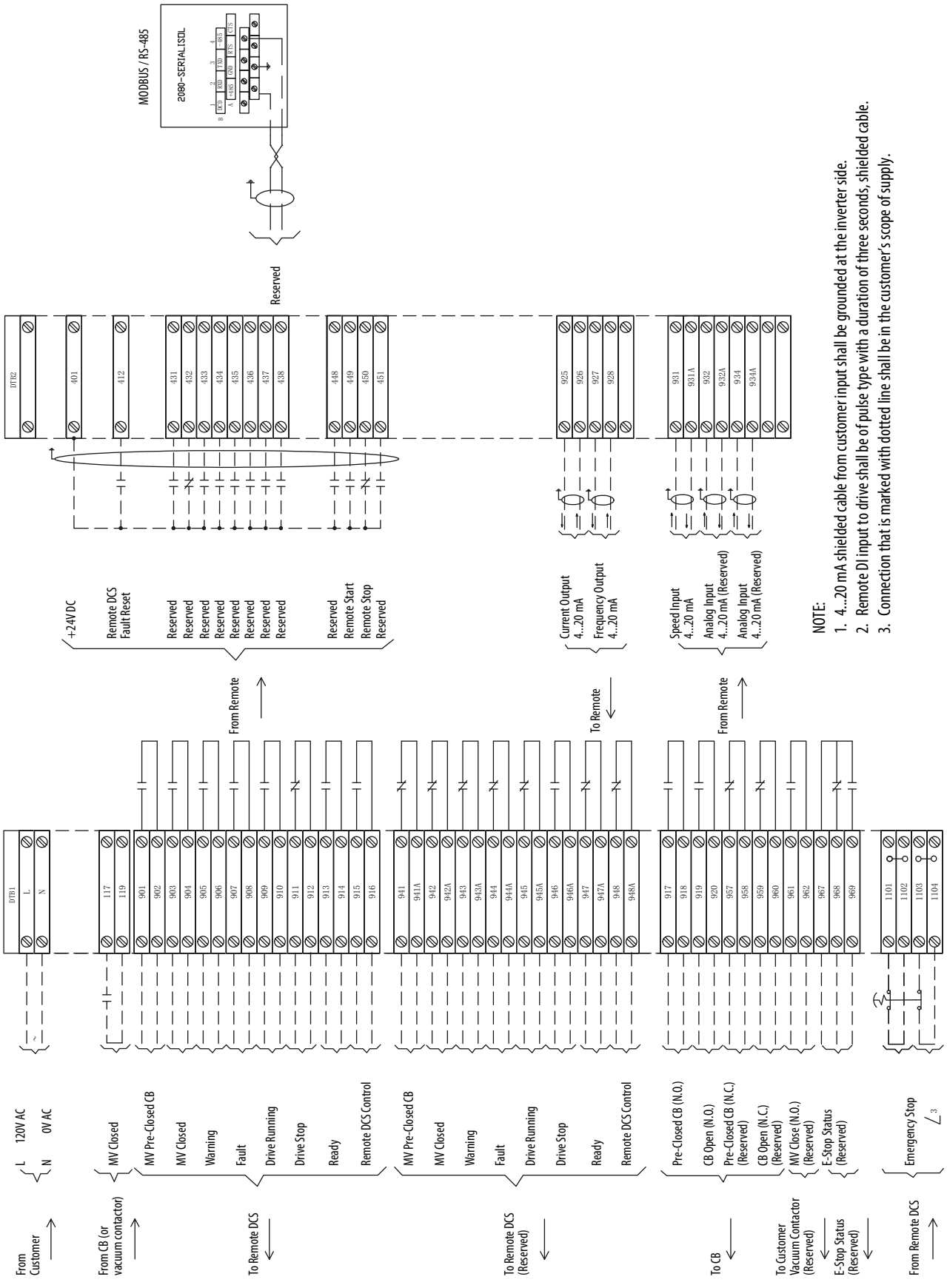

NOTE:

1. 4...20 mA shielded cable from customer input shall be grounded at the inverter side.
2. Remote DI input to drive shall be of pulse type with a duration of three seconds, shielded cable.
3. Connection that is marked with dotted line shall be in the customer's scope of supply.

Standard Input/Output Connection Points

Table 15 - Standard I/O Connections Points

Serial Number	Name of I/O Connection	AI	AO	DI	DO	Note
1	Input circuit breaker closing node is allowed (917, 918)				1	Serially connected into the input circuit breaker's closing circuit (the VFD provides passive normally open points, valid when closed)
	Input circuit breaker closing node is allowed (957, 958) (Reserved)				1	Serially connected into the input circuit breaker's closing circuit (the VFD provides passive normally closed points, valid when open)
2	Trip connection points within the VFD (919, 920)				1	Can be connected into input circuit breaker's closing circuit in parallel (the VFD provides passive normally open points, valid when closed)
	Trip connection points within the VFD (959, 960) (Reserved)				1	Can be connected into input circuit breaker's closing circuit (the VFD provides passive normally closed points, valid when open)
3	Input circuit breaker already closed connection point (117, 119)			1		Circuit breaker's auxiliary normally open connection points (valid when closed)
4	Input vacuum contactor close (961, 962) (Reserved)				1	Serially connected into the vacuum contactor close (the VFD provides passive normally open points, valid when closed)
5	Emergency stop status to Input vacuum contactor (967,968)(Reserved)				1	Serially connected into the vacuum contactor (the VFD provides passive normally closed points, valid when open)
	Emergency stop status to Input vacuum contactor (967,968)(Reserved)				1	Serially connected into the vacuum contactor (the VFD provides passive normally closed points, valid when open)

Table 16 - I/O Connections related to Remote Distributed Control System

Serial Number	Name of I/O Connection	AI	AO	DI	DO	Note
1	VFD speed regulation command (931, 931A)	1				User-provided 4...20mA
	Reserved (932, 932A)	1				User-provided 4...20 mA (Reserved)
	Reserved (934, 934A)	1				User-provided 4...20 mA (Reserved)
2	VFD speed feedback signal (927, 928)		1			VFD-provided 4...20mA
3	VFD current feedback signal (925, 926)		1			VFD-provided 4...20mA
4	Alternate start command signal (431, 401) (Reserved)			1		User-provided normally open passive dry contact (pulsed quantity, valid with 3S)
	Remote DCS start command signal (449, 401)			1		User-provided normally open passive dry contact (pulsed quantity, valid with 3S)
	Alternate command signal (432, 401) (Reserved)			1		User-provided normally closed passive dry contact (pulsed quantity, valid with 3S)
5	Remote DCS stop command signal (450, 401)			1		User-provided normally closed passive dry contact (pulsed quantity, valid with 3S)
6	Reserved (433, 401)			1		User-provided normally open passive dry contact (pulsed quantity, valid with 3S)
7	Reserved (434, 401)			1		User-provided normally open passive dry contact (pulsed quantity, valid with 3S)
8	Reserved (435, 401)			1		User-provided normally open passive dry contact (switch quantity)
	Reserved (436, 401)			1		User-provided normally open passive dry contact (switch quantity)
	Reserved (437, 401)			1		User-provided normally open passive dry contact (switch quantity)
	Reserved (438, 401)			1		User-provided normally open passive dry contact (switch quantity)
9	Remote DCS alternate (448, 401)			1		User-provided normally open passive dry contact (switch quantity)
10	Remote DCS fault reset command (412, 401)			1		User-provided normally open passive dry contact

Table 16 - I/O Connections related to Remote Distributed Control System (Continued)

Serial Number	Name of I/O Connection	AI	AO	DI	DO	Note
	Alternate reset command (412, 401)			1		User-provided normally open passive dry contact
11	Emergency stop button command (1101, 1102)			1		User-provided normally closed passive dry contact (voltage class higher than 220V AC, 5 A, switch quantity)
	Emergency stop button command (1103, 1104)			1		User-provided normally closed passive dry contact (voltage class higher than 220V AC, 5 A, switch quantity)
12	VFD allow closing indication (901, 902)				1	VFD-provided normally open passive dry contact (voltage class ≤220V AC, 5 A) (used for Remote DCS)
	Circuit breaker closing indication (903, 904)				1	VFD-provided normally open passive dry contact (voltage class ≤220V AC, 5 A) (used for Remote DCS)
	VFD alarm indication (905, 906)				1	VFD-provided normally open passive dry contact (voltage class ≤220V AC, 5 A) (used for Remote DCS)
	VFD fault indication (907, 908)				1	VFD-provided normally open passive dry contact (voltage class ≤220V AC, 5 A) (used for Remote DCS)
	VFD operation indication (909, 910)				1	VFD-provided normally open passive dry contact (voltage class ≤220V AC, 5 A) (used for Remote DCS)
	VFD stop indication (911, 912)				1	VFD-provided normally closed passive dry contact (voltage class ≤220V AC, 5 A) (used for Remote DCS)
	VFD ready indication (913, 914)				1	VFD-provided normally open passive dry contact (voltage class ≤220V AC, 5 A) (used for Remote DCS)
	Remote control indication (915, 916)				1	VFD-provided normally open passive dry contact (voltage class ≤220V AC, 5 A) (used for Remote DCS)
13	VFD allow closing indication (941, 941A)				1	VFD-provided normally closed passive dry contact (voltage class ≤220V AC, 5 A) (used for Remote DCS)
	Circuit breaker closing indication (942, 942A)				1	VFD-provided normally closed passive dry contact (voltage class ≤220V AC, 5 A) (used for Remote DCS)
	VFD alarm indication (943,943A)				1	VFD-provided normally closed passive dry contact (voltage class ≤220V AC, 5 A) (used for Remote DCS)
	VFD fault indication (944, 944A)				1	VFD-provided normally closed passive dry contact (voltage class ≤220V AC, 5 A) (used for Remote DCS)
	VFD operation indication (945, 945A)				1	VFD-provided normally closed passive dry contact (voltage class ≤220V AC, 5 A) (used for Remote DCS)
	VFD stop indication (946, 946A)				1	VFD-provided normally open passive dry contact (voltage class ≤220V AC, 5 A) (used for Remote DCS)
	VFD ready indication (947, 947A)				1	VFD-provided normally closed passive dry contact (voltage class ≤220V AC, 5 A) (used for Remote DCS)
	Remote control indication (948, 948A)				1	VFD-provided normally closed active dry contact (voltage class ≤220V AC, 5 A) (used for Remote DCS)

Notes:

Line and Load Cable Sizes

The data in the following tables are informative only; do not base final design criteria solely on this data. Follow national and local installation codes, industry best practices, and cable manufacturer recommendations. As cabling methods can vary widely, maximum cables sizes do not account for the size of the conduit hub.

Table 17 - Line and Load Cable Sizes for A-Frame Drives (IEC)

	Description (Motor V/Freq.)	Drive Enclosure		Max Size and No. Incoming Cables: IEC(1) (2) (3)
		Entry	Opening mm (in.)	
Maximum Line Cable Sizes	3000V, 50 Hz	Top	435 x 300 (17.1 x 11.8)	203 mm^2 6.6 kV/phase
		Bottom	220 x 143 (8.7 x 5.6)	
	3300V, 50 Hz	Top	435 x 300 (17.1 x 11.8)	203 mm^2 6.6 kV/phase
		Bottom	220 x 143 (8.7 x 5.6)	
	4000/4160V, 50/60 Hz	Top	435 x 300 (17.1 x 11.8)	203 mm^2 6.6 kV/phase
		Bottom	220 x 143 (8.7 x 5.6)	
Maximum Load Cable Sizes	3000V, 50/60 Hz	Top	435 x 300 (17.1 x 11.8)	203 mm^2 6.6 kV/phase
		Bottom	220 x 143 (8.7 x 5.6)	
	3300V, 50/60 Hz	Top	435 x 300 (17.1 x 11.8)	203 mm^2 6.6 kV/phase
		Bottom	220 x 143 (8.7 x 5.6)	
	4000/4160V, 50/60 Hz	Top	435 x 300 (17.1 x 11.8)	203 mm^2 6.6 kV/phase
		Bottom	220 x 143 (8.7 x 5.6)	

(1) Cable sizes are based on overall dimensions of compact-stranded three-conductor shielded cable (common for industrial cable tray installations). Maximum sizing stated accounts for minimum rated cable insulation requirements and the next higher-rated cable (that is, 8 kV is not commercially available in many areas of the world, therefore Rockwell Automation provides an 8 kV (minimum rating) and a 15 kV rating, when applicable. Enclosure openings accommodate the thicker insulation on the higher-rated cable. IEC ratings show the equivalent to the NEMA sizes. The exact cable mm^2 size that is shown is not commercially available in many cases; use the next smaller standard size.

(2) Minimum cable bend radius recommendations vary by national codes, cable type, and cable size. Consult local codes for guidelines and requirements. General relationship of cable diameter to bend radius is typically between 7x...12x (for example, if the cable diameter is 1 in. [2.54 cm] the minimum bend radius could range between 7...12 in. [18.8...30.48 cm]).

(3) As cabling methods can vary widely, maximum cable sizes that are shown do not account for the size of the conduit hub. Verify size of conduit hubs against the "Drive enclosure openings" shown.

Table 18 - Line and Load Cable Sizes for A-Frame Drives (UL)

	Description (Motor V/Freq.)	Drive Enclosure		Max Size and No. Incoming Cables: IEC(1) (2) (3)
		Entry	Opening mm (in.)	
Maximum Line Cable Sizes	2300/2400V, 60 Hz	Top	435 x 300 (17.1 x 11.8)	203 mm^2 (400 AWG) 6.6 kV/phase
		Bottom	220 x 143 (8.7 x 5.6)	
	4000/4160V, 50/60 Hz	Top	435 x 300 (17.1 x 11.8)	203 mm^2 (400 AWG) 6.6 kV/phase
		Bottom	220 x 143 (8.7 x 5.6)	
Maximum Load Cable Sizes	2300/2400V, 60 Hz	Top	435 x 300 (17.1 x 11.8)	203 mm^2 (400 AWG) 6.6 kV/phase
		Bottom	220 x 143 (8.7 x 5.6)	
	4000/4160V, 50/60 Hz	Top	435 x 300 (17.1 x 11.8)	203 mm^2 (400 AWG) 6.6 kV/phase
		Bottom	220 x 143 (8.7 x 5.6)	

(1) Cable sizes are based on overall dimensions of compact-stranded three-conductor shielded cable (common for industrial cable tray installations). Maximum sizing stated accounts for minimum rated cable insulation requirements and the next higher-rated cable (that is, 8 kV is not commercially available in many areas of the world, therefore Rockwell Automation provides an 8 kV (minimum rating) and a 15 kV rating, when applicable. Enclosure openings accommodate the thicker insulation on the higher-rated cable. IEC ratings show the equivalent to the NEMA sizes. The exact cable mm^2 size that is shown is not commercially available in many cases; use the next smaller standard size.

(2) Minimum cable bend radius recommendations vary by national codes, cable type, and cable size. Consult local codes for guidelines and requirements. General relationship of cable diameter to bend radius is typically between 7x...12x (for example, if the cable diameter is 1 in. [2.54 cm] the minimum bend radius could range between 7...12 in. [18.8...30.48 cm]).

(3) As cabling methods can vary widely, maximum cable sizes that are shown do not account for the size of the conduit hub. Verify size of conduit hubs against the "Drive enclosure openings" shown.

Table 19 - Line and Load Cable Sizes for H-Frame Drives (IEC)

	Description (Motor V/Freq.)	Drive Enclosure Opening mm (in.)	Max Size and No. Incoming Cables: IEC(1) (2) (3)
Maximum Line Cable Sizes	3000V, 50/60 Hz	110 (4.33)	300 mm^2 5 kV or 240 mm^2 8 kV/phase
	3300V, 50/60 Hz	110 (4.33)	300 mm^2 5 kV or 240 mm^2 8 kV/phase
	6000V, 50/60 Hz	110 (4.33)	240 mm^2 8 kV or 185 mm^2 15 kV/phase
	6600V, 50/60 Hz	110 (4.33)	240 mm^2 8 kV or 185 mm^2 15 kV/phase
	10,000V, 50/60 Hz	110 (4.33)	185 mm^2 15 kV/phase
	11,000V, 50/60 Hz	110 (4.33)	185 mm^2 15 kV/phase
Maximum Load Cable Sizes	3000V, 50/60 Hz	110 (4.33)	300 mm^2 5 kV or 240 mm^2 8 kV/phase
	3300V, 50/60 Hz	110 (4.33)	300 mm^2 5 kV or 240 mm^2 8 kV/phase
	6000V, 50/60 Hz	110 (4.33)	240 mm^2 8 kV or 185 mm^2 15 kV/phase
	6600V, 50/60 Hz	110 (4.33)	240 mm^2 8 kV or 185 mm^2 15 kV/phase
	10,000V, 50/60 Hz	110 (4.33)	185 mm^2 15 kV/phase
	11,000V, 50/60 Hz	110 (4.33)	185 mm^2 15 kV/phase

(1) Cable sizes are based on overall dimensions of compact-stranded three-conductor shielded cable (common for industrial cable tray installations). Maximum sizing stated accounts for minimum rated cable insulation requirements and the next higher-rated cable (that is, 8 kV is not commercially available in many areas of the world, therefore Rockwell Automation provides an 8 kV (minimum rating) and a 15 kV rating, when applicable. Enclosure openings accommodate the thicker insulation on the higher-rated cable. IEC ratings show the equivalent to the NEMA sizes. The exact cable mm^2 size that is shown is not commercially available in many cases; use the next smaller standard size.

(2) Minimum cable bend radius recommendations vary by national codes, cable type, and cable size. Consult local codes for guidelines and requirements. General relationship of cable diameter to bend radius is typically between 7x...12x (for example, if the cable diameter is 1 in. [2.54 cm] the minimum bend radius could range between 7...12 in. [18.8...30.48 cm]).

(3) As cabling methods can vary widely, maximum cable sizes that are shown do not account for the size of the conduit hub. Verify size of conduit hubs against the "Drive enclosure openings" shown.

Table 20 - Line and Load Cable Sizes for H-Frame Drives (UL)

	Description (Motor V/Freq.)	Drive Enclosure Opening mm (in.)	Max Size and No. Incoming Cables: UL(1) (2) (3)
Maximum Line Cable Sizes	2300/2400V, 50/60 Hz	1150 x 200 (45.3 x 7.9)	300 mm^2 (600 AWG) 5 kV or 240 mm^2 (500 AWG) 8 kV/phase
	4000/4160V, 50/60 Hz	1150 x 200 (45.3 x 7.9)	300 mm^2 (600 AWG) 5 kV or 240 mm^2 (500 AWG) 8 kV/phase
	6000V, 50/60 Hz	1150 x 200 (45.3 x 7.9)	240 mm^2 (500 AWG) 8 kV or 185 mm^2 (350 AWG)15 kV/phase
	6300V, 50/60 Hz	1150 x 200 (45.3 x 7.9)	240 mm^2 (500 AWG) 8 kV or 185 mm^2 (350 AWG)15 kV/phase
	6600V, 50/60 Hz	1150 x 200 (45.3 x 7.9)	240 mm^2 (500 AWG) 8 kV or 185 mm^2 (350 AWG)15 kV/phase
Maximum Load Cable Sizes	2300/2400V, 50/60 Hz	1150 x 200 (45.3 x 7.9)	300 mm^2 (600 AWG) 5 kV or 240 mm^2 (500 AWG) 8 kV/phase
	4000/4160V, 50/60 Hz	1150 x 200 (45.3 x 7.9)	300 mm^2 (600 AWG) 5 kV or 240 mm^2 (500 AWG) 8 kV/phase
	6000V, 50/60 Hz	1150 x 200 (45.3 x 7.9)	240 mm^2 (500 AWG) 8 kV or 185 mm^2 (350 AWG)15 kV/phase
	6300V, 50/60 Hz	1150 x 200 (45.3 x 7.9)	240 mm^2 (500 AWG) 8 kV or 185 mm^2 (350 AWG)15 kV/phase
	6600V, 50/60 Hz	1150 x 200 (45.3 x 7.9)	240 mm^2 (500 AWG) 8 kV or 185 mm^2 (350 AWG)15 kV/phase

(1) Cable sizes are based on overall dimensions of compact-stranded three-conductor shielded cable (common for industrial cable tray installations). Maximum sizing stated accounts for minimum rated cable insulation requirements and the next higher-rated cable (that is, 8 kV is not commercially available in many areas of the world, therefore Rockwell Automation provides an 8 kV (minimum rating) and a 15 kV rating, when applicable. Enclosure openings accommodate the thicker insulation on the higher-rated cable. IEC ratings show the equivalent to the NEMA sizes. The exact cable mm^2 size that is shown is not commercially available in many cases; use the next smaller standard size.

(2) Minimum cable bend radius recommendations vary by national codes, cable type, and cable size. Consult local codes for guidelines and requirements. General relationship of cable diameter to bend radius is typically between 7x...12x (for example, if the cable diameter is 1 in. [2.54 cm] the minimum bend radius could range between 7...12 in. [18.8...30.48 cm]).

(3) As cabling methods can vary widely, maximum cable sizes that are shown do not account for the size of the conduit hub. Verify size of conduit hubs against the "Drive enclosure openings" shown.

Table 21 - Line and Load Cable Sizes for B-Frame Drives (IEC and UL)

	Description (Motor V/Freq.)	Drive Enclosure Opening mm (in.)	Max Size and No. Incoming Cables (1) (2) (3)
Maximum Line Cable Sizes	2400V, 50/60 Hz	138 x 138 (5.4 x 5.4)	608 mm^2 (1200 kcmil) 5 kV or 608 mm^2 (1200 kcmil) 8 kV/phase
	3000V, 50/60 Hz	138 x 138 (5.4 x 5.4)	608 mm^2 (1200 kcmil) 5 kV or 608 mm^2 (1200 kcmil) 8 kV/phase
	3300V, 50/60 Hz	138 x 138 (5.4 x 5.4)	608 mm^2 (1200 kcmil) 5 kV or 608 mm^2 (1200 kcmil) 8 kV/phase
	4160V, 50/60 Hz	138 x 138 (5.4 x 5.4)	608 mm^2 (1200 kcmil) 5 kV or 608 mm^2 (1200 kcmil) 8 kV/phase
	6000V, 50/60 Hz	138 x 138 (5.4 x 5.4)	608 mm^2 (1200 kcmil) 8 kV or 608 mm^2 (1200 kcmil) 15 kV/phase
	6600V, 50/60 Hz	138 x 138 (5.4 x 5.4)	608 mm^2 (1200 kcmil) 8 kV or 608 mm^2 (1200 kcmil) 15 kV/phase
	7200V, 50/60 Hz	138 x 138 (5.4 x 5.4)	608 mm^2 (1200 kcmil) 8 kV or 608 mm^2 (1200 kcmil) 15 kV/phase
	10,000V, 50/60 Hz	138 x 138 (5.4 x 5.4)	608 mm^2 (1200 kcmil) 15 kV/phase
	11,000V, 50/60 Hz	138 x 138 (5.4 x 5.4)	608 mm^2 (1200 kcmil) 15 kV/phase
Maximum Load Cable Sizes	2300/2400V, 50/60 Hz	138 x 138 (5.4 x 5.4)	608 mm^2 (1200 kcmil) 5 kV or 608 mm^2 (1200 kcmil) 8 kV/phase
	3000V, 50/60 Hz	138 x 138 (5.4 x 5.4)	608 mm^2 (1200 kcmil) 5 kV or 608 mm^2 (1200 kcmil) 8 kV/phase
	3300V, 50/60 Hz	138 x 138 (5.4 x 5.4)	608 mm^2 (1200 kcmil) 5 kV or 608 mm^2 (1200 kcmil) 8 kV/phase
	4000/4160V, 50/60 Hz	138 x 138 (5.4 x 5.4)	608 mm^2 (1200 kcmil) 5 kV or 608 mm^2 (1200 kcmil) 8 kV/phase
	6000V, 50/60 Hz	138 x 138 (5.4 x 5.4)	608 mm^2 (1200 kcmil) 8 kV or 608 mm^2 (1200 kcmil) 15 kV/phase
	6300/6600V, 50/60 Hz	138 x 138 (5.4 x 5.4)	608 mm^2 (1200 kcmil) 8 kV or 608 mm^2 (1200 kcmil) 15 kV/phase
	6900V, 50/60 Hz	138 x 138 (5.4 x 5.4)	608 mm^2 (1200 kcmil) 8 kV or 608 mm^2 (1200 kcmil) 15 kV/phase
	10,000V, 50/60 Hz	138 x 138 (5.4 x 5.4)	608 mm^2 (1200 kcmil) 15 kV/phase
	11,000V, 50/60 Hz	138 x 138 (5.4 x 5.4)	608 mm^2 (1200 kcmil) 15 kV/phase

(1) Cable sizes are based on overall dimensions of compact-stranded three-conductor shielded cable (common for industrial cable tray installations). Maximum sizing stated accounts for minimum rated cable insulation requirements and the next higher-rated cable (that is, 8 kV is not commercially available in many areas of the world, therefore Rockwell Automation provides an 8 kV (minimum rating) and a 15 kV rating, when applicable. Enclosure openings accommodate the thicker insulation on the higher-rated cable. IEC ratings show the equivalent to the NEMA sizes. The exact cable mm^2 size that is shown is not commercially available in many cases; use the next smaller standard size.

(2) Minimum cable bend radius recommendations vary by national codes, cable type, and cable size. Consult local codes for guidelines and requirements. General relationship of cable diameter to bend radius is typically between 7x...12x (for example, if the cable diameter is 1 in. [2.54 cm] the minimum bend radius could range between 7...12 in. [18.8...30.48 cm]).

(3) As cabling methods can vary widely, maximum cable sizes that are shown do not account for the size of the conduit hub. Verify size of conduit hubs against the "Drive enclosure openings" shown.

Notes:

Rockwell Automation Support

Use these resources to access support information.

Technical Support Center	Find help with how-to videos, FAQs, chat, user forums, and product notification updates.	rok.auto/support
Knowledgebase	Access Knowledgebase articles.	rok.auto/knowledgebase
Local Technical Support Phone Numbers	Locate the telephone number for your country.	rok.auto/phonesupport
Literature Library	Find installation instructions, manuals, brochures, and technical data publications.	rok.auto/literature
Product Compatibility and Download Center (PCDC)	Download firmware, associated files (such as AOP, EDS, and DTM), and access product release notes.	rok.auto/pcdc

Documentation Feedback

Your comments help us serve your documentation needs better. If you have any suggestions on how to improve our content, complete the form at rok.auto/docfeedback.

Waste Electrical and Electronic Equipment (WEEE)

At the end of life, this equipment should be collected separately from any unsorted municipal waste.

Rockwell Automation maintains current product environmental compliance information on its website at rok.auto/pec.

Rockwell Otomasyon Ticaret A.Ş. Kar Plaza İş Merkezi E Blok Kat:6 34752, İçerenköy, İstanbul, Tel: +90 (216) 5698400 EEE Yönetmeliğine Uygundur

Connect with us.

rockwellautomation.com — expanding **human possibility**™

AMERICAS: Rockwell Automation, 1201 South Second Street, Milwaukee, WI 53204-2496 USA, Tel: (1) 414.382.2000, Fax: (1) 414.382.4444
EUROPE/MIDDLE EAST/AFRICA: Rockwell Automation NV, Pegasus Park, De Kleetlaan 12a, 1831 Diegem, Belgium, Tel: (32) 2 663 0600, Fax: (32) 2 663 0640
ASIA PACIFIC: Rockwell Automation, Level 14, Core F, Cyberport 3, 100 Cyberport Road, Hong Kong, Tel: (852) 2887 4788, Fax: (852) 2508 1846

Publication 6000-IN006H-EN-P - October 2020
Supersedes Publication 6000-IN006G-EN-P - September 2019