Installation Instructions

Original Instructions

Compact 5000 Digital 8-point 24V DC Output Module

Catalog Number 5069-OB8

Topic	Page
About the Module	5
Install a System	5
Install the Removable Terminal Block	7
Install the Module	7
Install the End Cap	8
Wire the Removable Terminal Block	8
Disconnect Wires from the Removable Terminal Block	8
Wiring Diagrams	9
Use a Cable Tie	10
Power the System	10
Remove the Module	10
Specifications	11
Additional Resources	11

The 5069-OB8 digital 8-point high current sourcing output module drives output devices. The data that is sent to the module from a controller and the state of some input modules determines the 5069-OB8 module behavior. Higher current output allows direct driving of higher current loads directly.

Compact 5000™ I/O modules use the Producer/Consumer communication model. The Producer/Consumer communication model is an intelligent data exchange between module and other system devices in which each module produces data without first being polled.

The modules are used as local I/O modules in CompactLogix™ 5380, Compact GuardLogix® 5380, and CompactLogix 5480, controller systems. They can also be used as remote I/O modules with CompactLogix 5380, Compact GuardLogix 5380, CompactLogix 5480 controllers, and some other Logix 5000™ controllers.

For more information on how to use Compact 5000 I/O modules, see the publications that are listed in Additional Resources on page 11.

Summary of Changes

Topic	Pages
Updated graphics	Throughout

ATTENTION: Read this document and the documents listed in the Additional Resources section about installation, configuration and operation of this equipment before you install, configure, operate or maintain this product. Users are required to familiarize themselves with installation and wiring instructions in addition to requirements of all applicable codes, laws, and standards.

Activities including installation, adjustments, putting into service, use, assembly, disassembly, and maintenance are required to be carried out by suitably trained personnel in accordance with applicable code of practice. If this equipment is used in a manner not specified by the manufacturer, the protection provided by the equipment may be impaired.

注意：在安装、配置、操作和维护本产品前，请阅读本文档以及 “ 其他资源 ” 部分列出的有关设备安装、配置和操作的相应文档。除了所有适用规范、法律和标准的相关要求之外，用户还必须熟悉安装和接线说明。

安装、调整、投运、使用、组装、拆卸和维护等各项操作必须由经过适当训练的专业人员按照适用的操作规范实施。

如果未按照制造商指定的方式使用该设备，则可能会损害设备提供的保护。

ATENCIÓN: Antes de instalar, configurar, poner en funcionamiento o realizar el mantenimiento de este producto, lea este documento y los documentos listados en la sección Recursos adicionales acerca de la instalación, configuración y operación de este equipo. Los usuarios deben familiarizarse con las instrucciones de instalación y cableado y con los requisitos de todos los códigos, leyes y estándares vigentes.

El personal debidamente capacitado debe realizar las actividades relacionadas a la instalación, ajustes, puesta en servicio, uso, ensamblaje, desensamblaje y mantenimiento de conformidad con el código de práctica aplicable. Si este equipo se usa de una manera no especificada por el fabricante, la protección provista por el equipo puede resultar afectada.

ATENÇÃO: Leia este e os demais documentos sobre instalação, configuração e operação do equipamento que estão na seção Recursos adicionais antes de instalar, configurar, operar ou manter este produto. Os usuários devem se familiarizar com as instruções de instalação e fiação além das especificações para todos os códigos, leis e normas aplicáveis.

É necessário que as atividades, incluindo instalação, ajustes, colocação em serviço, utilização, montagem, desmontagem e manutenção sejam realizadas por pessoal qualificado e especializado, de acordo com o código de prática aplicável.

Caso este equipamento seja utilizado de maneira não estabelecida pelo fabricante, a proteção fornecida pelo equipamento pode ficar prejudicada.

ВНИМАНИЕ: Перед тем как устанавливать, настраивать, эксплуатировать или обслуживать данное оборудование, прочитайте этот документ и документы, перечисленные в разделе «Дополнительные ресурсы». В этих документах изложены сведения об установке, настройке и эксплуатации данного оборудования. Пользователи обязаны ознакомиться с инструкциями по установке и прокладке соединений, а также с требованиями всех применимых норм, законов и стандартов.

Все действия, включая установку, наладку, ввод в эксплуатацию, использование, сборку, разборку и техническое обслуживание, должны выполняться обученным персоналом в соответствии с применимыми нормами и правилами.

Если оборудование используется не предусмотренным производителем образом, защита оборудования может быть нарушена.

注意：本製品を設置、構成、稼動または保守する前に、本書および本機器の設置、設定、操作についての参考資料の該当箇所に記載されている文書に目を通してください。ユーザは、すべての該当する条例、法律、規格の要件に加えて、設置および配線の手順に習熟している必要があります。

設置調整、運転の開始、使用、組立て、解体、保守を含む諸作業は、該当する実施規則に従って訓練を受けた適切な作業員が実行する必要があります。

本機器が製造メーカにより指定されていない方法で使用されている場合、機器により提供されている保護が損なわれる恐れがあります。

ACHTUNG: Lesen Sie dieses Dokument und die im Abschnitt „Weitere Informationen"aufgeführten Dokumente, die Informationen zu Installation, Konfiguration und Bedienung dieses Produkts enthalten, bevor Sie dieses Produkt installieren, konfigurieren, bedienen oder warten. Anwender müssen sich neben den Bestimmungen aller anwendbaren Vorschriften, Gesetze und Normen zusätzlich mit den Installations- und Verdrahtungsanweisungen vertraut machen.

Arbeiten im Rahmen der Installation, Anpassung, Inbetriebnahme, Verwendung, Montage, Demontage oder Instandhaltung dürfen nur durch ausreichend geschulte Mitarbeiter und in Übereinstimmung mit den anwendbaren Ausführungsvorschriften vorgenommen werden.

Wenn das Gerät in einer Weise verwendet wird, die vom Hersteller nicht vorgesehen ist, kann die Schutzfunktion beeinträchtigt sein.

ATTENTION : Lisez ce document et les documents listés dans la section Ressources complémentaires relatifs à l'installation, la configuration et le fonctionnement de cet équipement avant d'installer, configurer, utiliser ou entretenir ce produit. Les utilisateurs doivent se familiariser avec les instructions d'installation et de câblage en plus des exigences relatives aux codes, lois et normes en vigueur.

Les activités relatives à l'installation, le réglage, la mise en service, l'utilisation, l'assemblage, le démontage et l'entretien doivent être réalisées par des personnes formées selon le code de pratique en vigueur.

Si cet équipement est utilisé d'une façon qui n'a pas été définie par le fabricant, la protection fournie par l'équipement peut être compromise.

주의 : 본 제품 설치 , 설정 , 작동 또는 유지 보수하기 전에 본 문서를 포함하여 설치 , 설정 및 작동에 관한 참고 자료 섹션의 문서들을 반드시 읽고 숙지하십시오 . 사용자는 모든 관련 규정 , 법규 및 표준에서 요구하는 사항에 대해 반드시 설치 및 배선 지침을 숙지해야 합니다 .

설치 , 조정 , 가동 , 사용 , 조립 , 분해 , 유지보수 등 모든 작업은 관련 규정에 따라 적절한 교육을 받은 사용자를 통해서만 수행해야 합니다 .

본 장비를 제조사가 명시하지 않은 방법으로 사용하면 장비의 보호 기능이 손상될 수 있습니다 .

ATTENZIONE Prima di installare, configurare ed utilizzare il prodotto, o effettuare interventi di manutenzione su di esso, leggere il presente documento ed i documenti elencati nella sezione "Altre risorse", riguardanti l'installazione, la configurazione ed il funzionamento dell'apparecchiatura. Gli utenti devono leggere e comprendere le istruzioni di installazione e cablaggio, oltre ai requisiti previsti dalle leggi, codici e standard applicabili.

Le attività come installazione, regolazioni, utilizzo, assemblaggio, disassemblaggio e manutenzione devono essere svolte da personale adeguatamente addestrato, nel rispetto delle procedure previste.

Qualora l'apparecchio venga utilizzato con modalità diverse da quanto previsto dal produttore, la sua funzione di protezione potrebbe venire compromessa.

DİKKAT: Bu ürünün kurulumu, yapılandırılması, işletilmesi veya bakımı öncesinde bu dokümanı ve bu ekipmanın kurulumu, yapılandırılması ve işletimi ile ilgili İlave Kaynaklar bölümünde yer listelenmiş dokümanları okuyun. Kullanıcılar yürürlükteki tüm yönetmelikler, yasalar ve standartların gereksinimlerine ek olarak kurulum ve kablolama talimatlarını da öğrenmek zorundadır.

Kurulum, ayarlama, hizmete alma, kullanma, parçaları birleştirme, parçaları sökme ve bakım gibi aktiviteler sadece uygun eğitimleri almış kişiler tarafından yürürlükteki uygulama yönetmeliklerine uygun şekilde yapılabilir.

Bu ekipman üretici tarafından belirlenmiş amacın dışında kullanılırsa, ekipman tarafından sağlanan koruma bozulabilir.

注意事項：在安裝、設定、操作或維護本產品前，請先閱讀此文件以及列於 「其他資源」章節中有關安裝、設定與操作此設備的文件。使用者必須熟悉安裝和配線指示，並符合所有法規、法律和標準要求。

包括安裝、調整、交付使用、使用、組裝、拆卸和維護等動作都必須交由已經過適當訓練的人員進行，以符合適用的實作法規。

如果將設備用於非製造商指定的用途時，可能會造成設備所提供的保護功能受損。

POZOR: Než začnete instalovat, konfigurovat či provozovat tento výrobek nebo provádět jeho údržbu, přečtěte si tento dokument a dokumenty uvedené v části Dodatečné zdroje ohledně instalace, konfigurace a provozu tohoto zařízení. Uživatelé se musejí vedle požadavků všech relevantních vyhlášek, zákonů a norem nutně seznámit také s pokyny pro instalaci a elektrické zapojení.

Činnosti zahrnující instalaci, nastavení, uvedení do provozu, užívání, montáž, demontáž a údržbu musí vykonávat vhodně proškolený personál v souladu s příslušnými prováděcími předpisy.

Pokud se toto zařízení používá způsobem neodpovídajícím specifikaci výrobce, může být narušena ochrana, kterou toto zařízení poskytuje.

UWAGA: Przed instalacją, konfiguracją, użytkowaniem lub konserwacją tego produktu należy przeczytać niniejszy dokument oraz wszystkie dokumenty wymienione w sekcji Dodatkowe źródła omawiające instalację, konfigurację i procedury użytkowania tego urządzenia. Użytkownicy mają obowiązek zapoznać się z instrukcjami dotyczącymi instalacji oraz oprzewodowania, jak również z obowiązującymi kodeksami, prawem i normami.

Działania obejmujące instalację, regulację, przekazanie do użytkowania, użytkowanie, montaż, demontaż oraz konserwację muszą być wykonywane przez odpowiednio przeszkolony personel zgodnie z obowiązującym kodeksem postępowania.

Jeśli urządzenie jest użytkowane w sposób inny niż określony przez producenta, zabezpieczenie zapewniane przez urządzenie może zostać ograniczone.

OBS! Läs detta dokument samt dokumentet, som står listat i avsnittet Övriga resurser, om installation, konfigurering och drift av denna utrustning innan du installerar, konfigurerar eller börjar använda eller utföra underhållsarbete på produkten. Användare måste bekanta sig med instruktioner för installation och kabeldragning, förutom krav enligt gällande koder, lagar och standarder.

Åtgärder som installation, justering, service, användning, montering, demontering och underhållsarbete måste utföras av personal med lämplig utbildning enligt lämpligt bruk.

Om denna utrustning används på ett sätt som inte anges av tillverkaren kan det hända att utrustningens skyddsanordningar försätts ur funktion.

LET OP: Lees dit document en de documenten die genoemd worden in de paragraaf Aanvullende informatie over de installatie, configuratie en bediening van deze apparatuur voordat u dit product installeert, configureert, bediend of onderhoudt. Gebruikers moeten zich vertrouwd maken met de installatie en de bedradingsinstructies, naast de vereisten van alle toepasselijke regels, wetten en normen.

Activiteiten zoals het installeren, afstellen, in gebruik stellen, gebruiken, monteren, demonteren en het uitvoeren van onderhoud mogen uitsluitend worden uitgevoerd door hiervoor opgeleid personeel en in overeenstemming met de geldende praktijkregels.

Indien de apparatuur wordt gebruikt op een wijze die niet is gespecificeerd door de fabrikant, dan bestaat het gevaar dat de beveiliging van de apparatuur niet goed werkt.

ATTENTION: This equipment is intended for use in a Pollution Degree 2 industrial environment, in overvoltage Category II applications (as defined in EN/IEC 60664-1), at altitudes up to 2000 m (6562 ft) without derating.
This equipment is not intended for use in residential environments and may not provide adequate protection to radio communication services in such environments.

This equipment is supplied as open-type equipment for indoor use. It must be mounted within an enclosure that is suitably designed for those specific environmental conditions that will be present and appropriately designed to prevent personal injury resulting from accessibility to live parts. The enclosure must have suitable flame-retardant properties to prevent or minimize the spread of flame, complying with a flame spread rating of 5VA or be approved for the application if nonmetallic. The interior of the enclosure must be accessible only by the use of a tool. Subsequent sections of this publication may contain more information regarding specific enclosure type ratings that are required to comply with certain product safety certifications.

In addition to this publication, see the following:

- Industrial Automation Wiring and Grounding Guidelines, publication 1770-4.1, for more installation requirements.
- NEMA Standard 250 and EN/IEC 60529, as applicable, for explanations of the degrees of protection provided by enclosures.

North American Hazardous Location Approval

The following information applies when operating this equipment in hazardous locations.	**Informations sur l'utilisation de cet équipement en environnements dangereux.**
Products marked "CL I, DIV 2, GP A, B, C, D" are suitable for use in Class I Division 2 Groups A, B, C, D, Hazardous Locations and nonhazardous locations only. Each product is supplied with markings on the rating nameplate indicating the hazardous location temperature code. When combining products within a system, the most adverse temperature code (lowest "T" number) may be used to help determine the overall temperature code of the system. Combinations of equipment in your system are subject to investigation by the local Authority Having Jurisdiction at the time of installation.	Les produits marqués "CL I, DIV 2, GP A, B, C, D" ne conviennent qu'à une utilisation en environnements de Classe I Division 2 Groupes A, B, C, D dangereux et non dangereux. Chaque produit est livré avec des marquages sur sa plaque d'identification qui indiquent le code de température pour les environnements dangereux. Lorsque plusieurs produits sont combinés dans un système, le code de température le plus défavorable (code de température le plus faible) peut être utilisé pour déterminer le code de température global du système. Les combinaisons d'équipements dans le système sont sujettes à inspection par les autorités locales qualifiées au moment de l'installation.
WARNING: **Explosion Hazard –** • Do not disconnect equipment unless power has been removed or the area is known to be nonhazardous. • Do not disconnect connections to this equipment unless power has been removed or the area is known to be nonhazardous. Secure any external connections that mate to this equipment by using screws, sliding latches, threaded connectors, or other means provided with this product. • Substitution of components may impair suitability for Class I, Division 2.	**AVERTISSEMENT:** **Risque d'Explosion –** • Couper le courant ou s'assurer que l'environnement est classé non dangereux avant de débrancher l'équipement. • Couper le courant ou s'assurer que l'environnement est classé non dangereux avant de débrancher les connecteurs. Fixer tous les connecteurs externes reliés à cet équipement à l'aide de vis, loquets coulissants, connecteurs filetés ou autres moyens fournis avec ce produit. • La substitution de composants peut rendre cet équipement inadapté à une utilisation en environnement de Classe I, Division 2.

European Hazardous Location Approval

The following applies to products marked CE, Ex **II 3 G**. Such modules:

- Are Equipment Group II, Equipment Category 3, and comply with the Essential Health and Safety Requirements relating to the design and construction of such equipment given in Annex II to Directive 2014/34/EU. See the EC Declaration of Conformity at rok.auto/certifications for details.
- The type of protection is "Ex ec IIC T4 Gc" according to EN 60079-7.
- The 5069-OB8 module complies to standards: EN 60079-0:2018, EN 60079-7:2015+A1:2018, reference certificate number DEMKO 15 ATEX 1484X.
- Are intended for use in areas in which explosive atmospheres caused by gases, vapors, mists, or air are unlikely to occur, or are likely to occur only infrequently and for short periods. Such locations correspond to Zone 2 classification according to ATEX directive 2014/34/EU.

IEC Hazardous Location Approval

The following applies to products with IECEx certification:

- Are intended for use in areas in which explosive atmospheres caused by gases, vapors, mists, or air are unlikely to occur, or are likely to occur only infrequently and for short periods. Such locations correspond to Zone 2 classification to IEC 60079-0.
- The type of protection is "Ex ec IIC T4 Gc" according to IEC 60079-7.
- The 5069-OB8 module complies to standards IEC 60079-0:7th edition, IEC-60079-7:5.1 Edition, reference IECEx certificate number IECEx UL 15.0055X.

ATTENTION:

- Installation, adjustments, putting into service, use, assembly, disassembly, and maintenance are required to be carried out by suitably trained personnel in accordance with applicable code of practice.
- In case of malfunction or damage, no attempts at repair should be made. The module should be returned to the manufacturer for repair. Do not dismantle the module.
- This equipment is certified for use only within the surrounding air temperature range of 0...60 °C (32...140 °F) The equipment must not be used outside of this range.
- Use only a soft dry anti-static cloth to wipe down equipment. Do not use any cleaning agents.

WARNING:
- This equipment is not resistant to sunlight or other sources of UV radiation.
- This equipment shall be mounted in an ATEX/IECEx Zone 2 certified enclosure with a minimum ingress protection rating of at least IP54 (as defined in EN/IEC 60079-0) and used in an environment of not more than Pollution Degree 2 (as defined in EN/IEC 60664-1) when applied in Zone 2 environments. The enclosure must be accessible only by the use of a tool.
- This equipment shall be used within its specified ratings defined by Rockwell Automation.
- Provision shall be made to prevent the rated voltage from being exceeded by transient disturbances of more than 140% of the rated voltage when applied in Zone 2 environments.
- The instructions in the user manual shall be observed.
- This equipment must be used only with ATEX/IECEx certified Rockwell Automation backplanes.
- Secure any external connections that mate to this equipment by using screws, sliding latches, threaded connectors, or other means provided with this product.
- Do not disconnect equipment unless power has been removed or the area is known to be nonhazardous.
- Earthing is accomplished through mounting of modules on rail.
- Devices shall be used in an environment of not more than Pollution Degree 2.

ATTENTION: This equipment is sensitive to electrostatic discharge, which can cause internal damage and affect normal operation. Follow these guidelines when you handle this equipment:
- Touch a grounded object to discharge potential static.
- Wear an approved grounding wriststrap.
- Do not touch connectors or pins on component boards.
- Do not touch circuit components inside the equipment.
- Use a static-safe workstation, if available.
- Store the equipment in appropriate static-safe packaging when not in use.

IMPORTANT Any illustrations, charts, sample programs, and layout examples shown in this publication are intended solely for the purposes of example. Since there are many variables and requirements associated with any particular installation, Rockwell Automation does not assume responsibility or liability for actual use based upon the examples shown in this publication.

About the Module

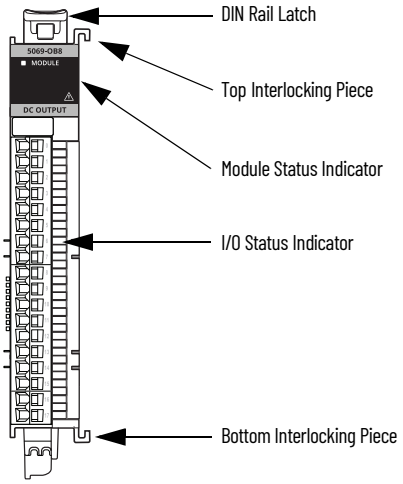

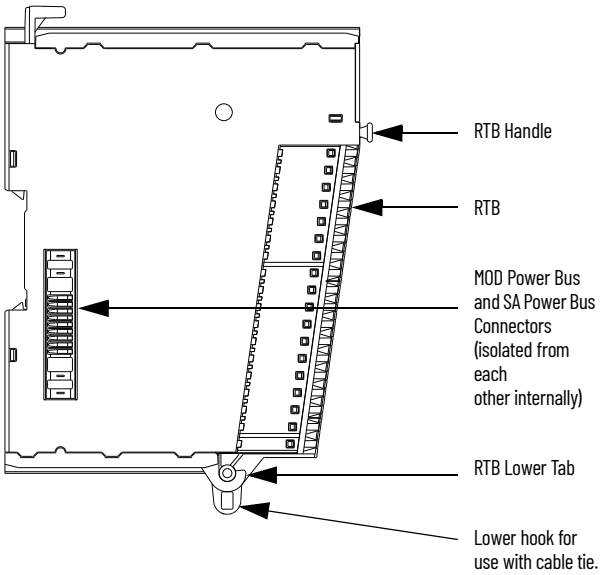

Install a System

Based on your application design, you must install a CompactLogix 5380 controller, CompactLogix 5480 controller, Compact GuardLogix 5380 controller, or a Compact 5000 I/O EtherNet/IP™ adapter before you can install the module.

For more information on how to install these components, see Additional Resources on page 11.

Required Components

To install the module, you need the following components.

Component	Description
Removable terminal blocks	One of the following RTB types. • 5069-RTB18-SPRING RTB • 5069-RTB18-SCREW RTB **IMPORTANT**: You must order RTBs separately. RTBs do not ship with Compact 5000 I/O modules. We recommend that you order only the RTB type that your system requires.
End cap	An end cap ships with the CompactLogix 5380 controllers, CompactLogix 5480 controller, and Compact GuardLogix 5380 controllers and the Compact 5000 I/O EtherNet/IP adapters.
Tools	The following tools are needed: • Screwdriver • Wire stripper • Wires For more information on available wire sizes and wire insulation-stripping length, see Specifications on page 11.

Dimensions

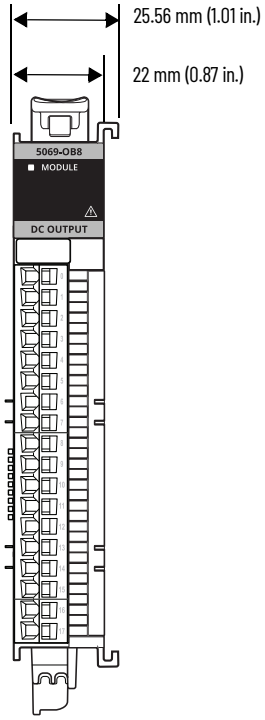

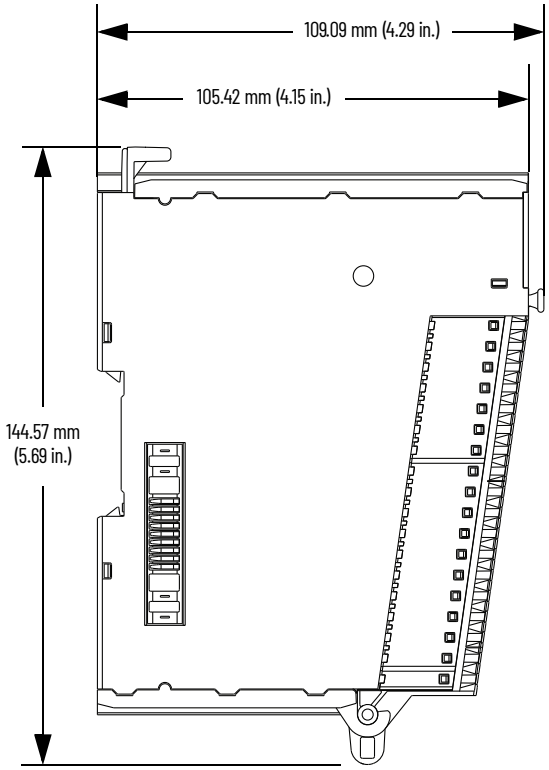

Ground Considerations

You must ground DIN rails according to the Industrial Automation Wiring and Grounding Guidelines, publication 1770-4.1.

ATTENTION: This product is grounded through the DIN rail to chassis ground. Use zinc-plated chromate-passivated steel DIN rail to assure proper grounding. The use of other DIN rail materials (for example, aluminum or plastic) that can corrode, oxidize, or are poor conductors, can result in improper or intermittent grounding. Secure DIN rail to mounting surface approximately every 200 mm (7.8 in.) and use end-anchors appropriately. Be sure to ground the DIN rail properly. Refer to Industrial Automation Wiring and Grounding Guidelines, Rockwell Automation® publication 1770-4.1 for more information.

Use the EN50022 - 35 x 7.5 mm (1.38 x 0.30 in.) DIN rail with Compact 5000 I/O modules.

System Power Considerations

A CompactLogix 5380 controller, Compact GuardLogix 5380, CompactLogix 5480 controller, or Compact 5000 I/O EtherNet/IP adapter provides power to the module. The following power types are available:

- **Module (MOD) power** - System-side power that is required to operate the Compact 5000 I/O modules. MOD power is provided through the MOD power RTB and passed across the MOD power bus. A system has only one MOD power bus.
- **Sensor/Actuator (SA) power** - Field-side power that is used to power field-side devices that are connected to some Compact 5000 I/O digital modules. SA power is provided through the SA power RTB and passed across the SA power bus.

  The first component in the system, that is, the controller or the adapter, establishes an SA power bus. A system can have multiple SA power buses. You use 5069-FPD field potential distributors to establish a new SA power bus. SA power buses are isolated from each other. If a system includes Compact 5000 I/O modules that use AC SA power and modules that use DC SA power, you must install them on separate SA power buses.

  To keep the modules on separate SA power buses, complete the following steps.

  a. Install the modules that use one type of SA power, for example DC, to the right of the adapter or controller, that is, the first SA power bus.
  b. Install the 5069-FPD field potential distributor to establish a second SA power bus.
  c. Install the modules that use the other type of SA power, for example AC, on the second SA power bus.

IMPORTANT We recommend that you use separate external power supplies for MOD power and SA power respectively. This practice helps to prevent unintended consequences that can result if you use one supply.

If you use separate external power supplies, the loss of power from one external power supply does not affect the availability of power from the other supply. For example, if separate external power supplies are used and SA power is lost, MOD power remains available for the Compact 5000 I/O modules.

Install the Removable Terminal Block

WARNING: If you connect or disconnect the removable terminal block (RTB) with power applied, an electric arc can occur. This could cause an explosion in hazardous location installations.
The removable terminal block (RTB) does not support "removal and insertion under power" (RIUP) capability. Do not connect or disconnect the removable terminal block (RTB) while power is applied. Be sure that power is removed before proceeding.

1. Hook the bottom of the RTB on the module.
2. Push the RTB against the module until the RTB clicks into place.

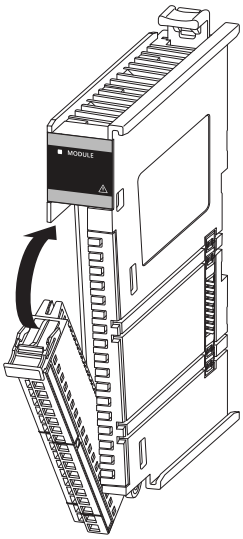

3. Push the RTB handle against the RTB until you hear another click.

Install the Module

WARNING: If you insert or remove the module while backplane power is on, an electric arc can occur. This could cause an explosion in hazardous location installations.
The module does not support "removal and insertion under power" (RIUP) capability. Do not connect or disconnect the module while power is applied. Be sure that power is removed before proceeding.

Install the I/O module next to the right-most device in the system.

1. Confirm that MOD power and all sources of SA and LA power are off.

   If you remove the module with power applied, the system MOD power bus and SA power bus are affected. For example, you can interrupt MOD power to the other modules in the system. Unintended consequences can occur as a result.

2. If an end cap is installed on the right-most module that is installed in the system, remove it and keep for later use.

   ATTENTION: Do not discard the end cap. Use this end cap to cover the exposed interconnections on the last module on the DIN rail. Failure to do so could result in equipment damage or injury from electric shock.

3. Confirm that the DIN rail latch is closed.
4. If the DIN rail latches are open, gently push the rear latch back until the front latch pops up and clicks.

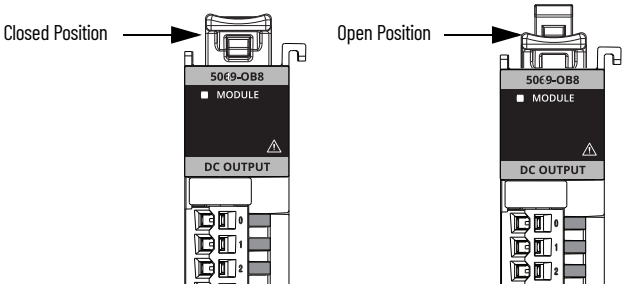

5. Align the interlocking pieces of the module with the device on the left.

   The top interlocking pieces engage first.

6. Push the module toward the DIN rail until a click indicates that the module is locked in place.

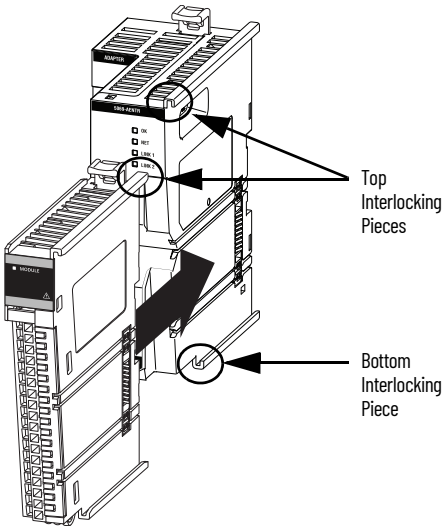

7. Verify that the module is installed in one of the following ways:
   - If the module is installed next to a controller or adapter, the front of the module is set back slightly from the front of the controller or adapter.
   - If the module is installed next to another I/O module, the fronts of both modules are flush with each other.

Install the End Cap

You must install an end cap on the last module in your system.

IMPORTANT You install the end cap after the last module is installed on the DIN rail. This design helps to prevent the end cap from going beyond the locked position.

If you push the end cap beyond the locked position or insert it from the backwards direction, you can damage the MOD power bus and SA power bus connector.

1. Align the end cap with the interlocking pieces on the module.
2. Push the end cap toward the DIN rail until it locks in place.

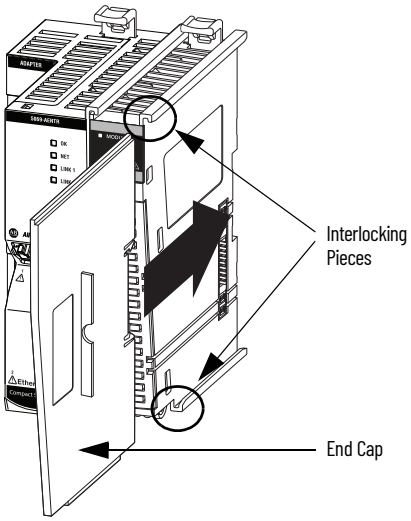

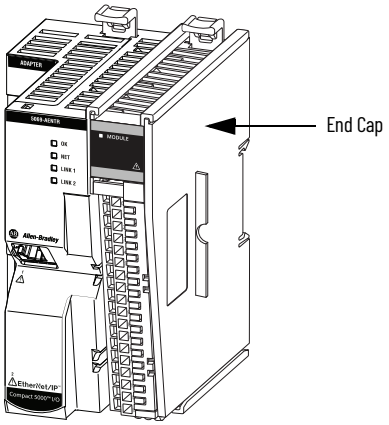

Wire the Removable Terminal Block

1. Confirm that MOD power and all sources of SA and LA power are turned off.
2. Strip insulation from the wires that you connect to the RTB.

RTB Type	Action
Screw	Strip12 mm (0.47 in.) of insulation from the wires.
Spring	Strip 10 mm (0.39 in.) of insulation from the wires.

3. Connect the wire to the terminal.

RTB Type	Action
Screw	1. Insert the wire into the terminal. 2. Turn the screwdriver to close the terminal on the wire. Torque the screw to 0.4 N•m (3.5 lb•in).
Spring	Push the wire into the terminal. If the wire is too thin, crimp a wire ferrule on the wire and insert it.

5069-RTB18-SCREW RTB

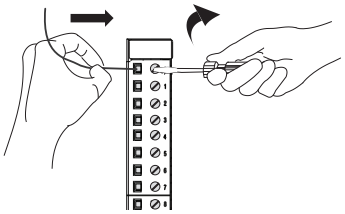

5069-RTB18-SPRING RTB

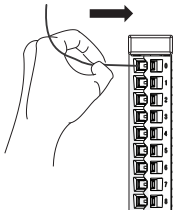

Disconnect Wires from the Removable Terminal Block

WARNING: If you connect or disconnect wiring while power is applied, an electric arc can occur. This could cause an explosion in hazardous location installations. Be sure that power is removed or the area is nonhazardous before proceeding.

Disconnect wires from the RTB.

RTB Type	Action
Screw	1. Turn the screwdriver counter-clockwise to open the terminal. 2. Remove the wire.
Spring	1. Insert and hold a screwdriver in the right-side terminal. 2. Remove the wire. 3. Pull out the screwdriver.

5069-RTB18-SCREW RTB

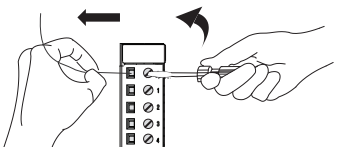

5069-RTB18-SPRING RTB

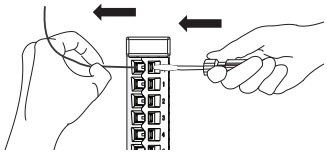

Wiring Diagrams

The following is an example wiring diagram for the 5069-OB8 digital output module.

Channel Connections

The diagram shows devices that are connected to channels 0 and 3. You are not restricted to using only those channels.
You can connect devices to any channel or combination of channels as needed.

IMPORTANT: The Local Actuator (LA+ and LA –) connections are used to supply field-side power to the module.
The module does not draw current from the SA power bus that is internal to the system.
Output channels 0...3 use LA0 +/–, and output channels 4...7 use LA1 +/–.

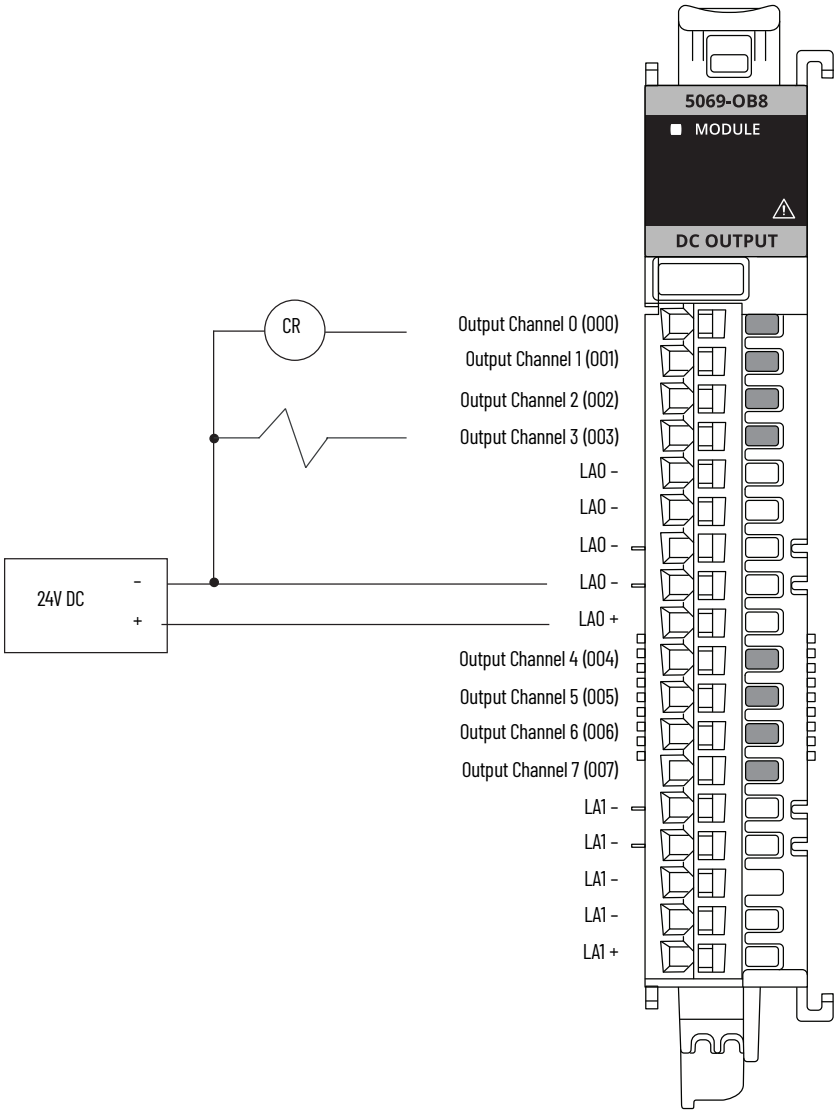

Use a Cable Tie

After you connect the required wires to the RTB, you can use a cable tie to bundle the wires. There is a lower hook at the bottom of the module that you use to secure the tied bundle to the module.

1. Make sure that you have a cable tie long enough to contain the wires that are connected to the module. The maximum width of the cable tie is 4.5 mm (0.18 in).
2. Gather the wires at the bottom of the module.

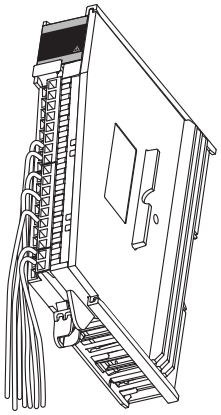

3. Thread the cable tie through the lower hook at the bottom of the RTB.

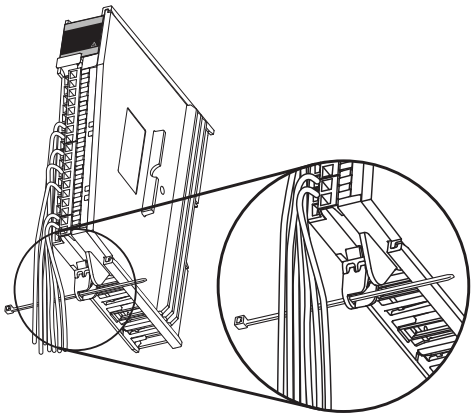

4. Wrap the cable tie around the wires and secure it.

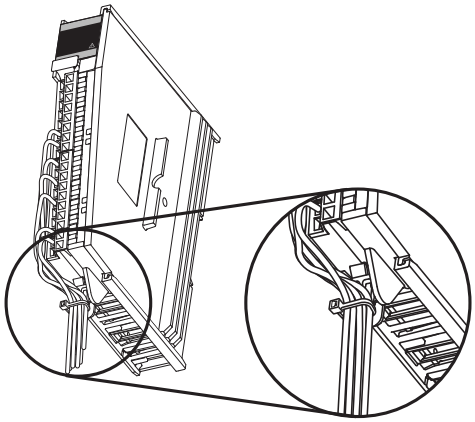

Power the System

After you install all Compact 5000 I/O modules, you can turn on MOD power and, if used, SA power or LA power to the system.

For more information on MOD power and SA power, see System Power Considerations on page 6.

Remove the Module

ATTENTION: Do not remove or replace the module while power is applied. Interruption of the backplane can result in unintentional operation or machine motion.

1. Confirm that MOD power and all sources of SA and LA power are turned off.

IMPORTANT Before you remove MOD power and, if used, SA power, consider the effect on your system.

When you remove MOD power from the controller or adapter, you shut down power to all modules in the system. That is, all system-side is removed. When you remove SA power from the controller, adapter or a field potential distributor, all field-side power that is provided by that component is removed.

We strongly recommend that you take the appropriate actions to help prevent unintended consequences that can result from a system power shutdown before removing MOD power or SA power.

2. If necessary, remove the end cap from the module.
3. If desired, disconnect wires from the RTB as described on page 8.
4. Press the DIN rail latch down until it clicks and let go.
5. Pull the module off the DIN rail.

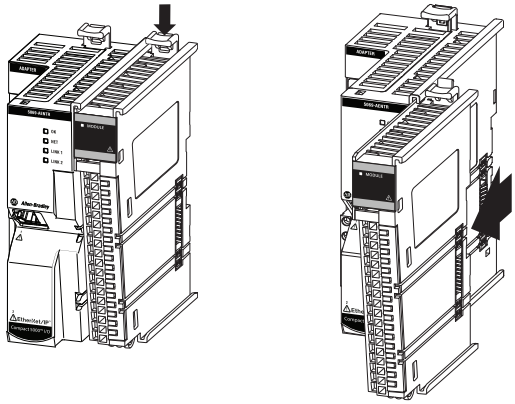

6. To replace the module, follow the steps that are described beginning at Install the Module on page 7.

Specifications

For a list of all specifications, see the Compact 5000 I/O Modules and EtherNet/IP Adapters Technical Data, publication 5069-TD001.

Attribute	5069-OB8
Temperature, operating • IEC 60068-2-1 (Test Ad, Operating Cold), • IEC 60068-2-2 (Test Bd, Operating Dry Heat), • IEC 60068-2-14 (Test Nb, Operating Thermal Shock)	0 °C < Ta < +60 °C (+32 °F < Ta < +140 °F)
Temperature, surrounding air, max	60 °C (140 °F)
Enclosure type rating	None (open-style)
Voltage and current ratings	
Output voltage range	10...32V DC
Output current, max	2 A per channel 8 A per group 16 A per module
MOD Power	75 mA @ 18...32V DC
MOD Power (Passthrough)(1)	9.55 A @ 18...32V DC
LA Power	2 A per channel @ 10...32V DC 8 A per group @ 10...32V DC 16 A per module @ 10...32V DC
SA Power (Passthrough)(2)	9.95 A @ 10...32V DC
Do not exceed 10 A MOD or SA Power (Passthrough) current draw.	
Isolation voltage	300V (continuous), Basic Insulation Type Type tested at 1800V AC for 60 s No isolation between LA power and output ports No isolation between individual output ports
Wire size	
5069-RTB18-SCREW connections	0.5...1.5 mm^2 (22...16 AWG) solid or stranded shielded copper wire rated at 105 °C (221 °F), or greater, 3.5 mm (0.14 in.) max diameter including insulation, single wire connection only.
5069-RTB18-SPRING connections	0.5...1.5 mm^2 (22...16 AWG) solid or stranded shielded copper wire rated at 105 °C (221 °F), or greater, 2.9 mm (0.11 in.) max diameter including insulation, single wire connection only.
Insulation-stripping length	
5069-RTB18-SCREW connections	12 mm (0.47 in.)
5069-RTB18-SPRING connections	10 mm (0.39 in.)
RTB torque specifications (5069-RTB18-SCREW RTB only)	0.4 N·m (3.5 lb·in)
Pilot duty rating	Resistive/General Pilot Duty 2 A pilot duty
North American Temp Code	T4
ATEX Temp Code	T4
IECEx Temp Code	T4

(1) Maximum level of MOD Power current that the module can pass through to the next module in the system. The specific level of current passed through varies based on system configuration.

(2) Maximum level of SA Power current that the module can through to the next module in the system. The specific level of current passed through varies based on system configuration.

Additional Resources

Resource	Description
Compact 5000 I/O Modules and EtherNet/IP Adapters Technical Data, publication 5069-TD001	Provides specifications for Compact 5000 I/O modules and EtherNet/IP adapters.
Compact 5000 I/O Digital Modules User Manual, publication 5069-UM004	Describes how to use the Compact 5000 I/O standard and safety digital modules.
Compact 5000 EtherNet/IP Adapters User Manual, publication 5069-UM007	Describes how to use Compact 5000 EtherNet/IP adapters.
CompactLogix 5380 and Compact GuardLogix 5380 Controllers User Manual, publication 5069-UM001	Describes how to use CompactLogix 5380 and Compact GuardLogix 5380 controllers.
Industrial Automation Wiring and Grounding Guidelines, publication 1770-4.1	Provides general guidelines for installing a Rockwell Automation® industrial system.
Product Certifications website, rok.auto/certifications	Provides declarations of conformity, certificates, and other certification details.

You can view or download publications at rok.auto/literature. To order paper copies of technical documentation, contact your local Allen-Bradley distributor or Rockwell Automation sales representative.

Rockwell Automation Support

Use these resources to access support information.

Technical Support Center	Find help with how-to videos, FAQs, chat, user forums, and product notification updates.	rok.auto/support
Knowledgebase	Access Knowledgebase articles.	rok.auto/knowledgebase
Local Technical Support Phone Numbers	Locate the telephone number for your country.	rok.auto/phonesupport
Literature Library	Find installation instructions, manuals, brochures, and technical data publications.	rok.auto/literature
Product Compatibility and Download Center (PCDC)	Download firmware, associated files (such as AOP, EDS, and DTM), and access product release notes.	rok.auto/pcdc

Documentation Feedback

Your comments help us serve your documentation needs better. If you have any suggestions on how to improve our content, complete the form at rok.auto/docfeedback.

Waste Electrical and Electronic Equipment (WEEE)

At the end of life, this equipment should be collected separately from any unsorted municipal waste.

Rockwell Automation maintains current product environmental compliance information on its website at rok.auto/pec.

Your comments help us serve your documentation needs better. If you have any suggestions on how to improve our content, complete the form at rok.auto/docfeedback.
For technical support, visit rok.auto/support.

Rockwell Otomasyon Ticaret A.Ş. Kar Plaza İş Merkezi E Blok Kat:6 34752 İçerenköy, İstanbul, Tel: +90 (216) 5698400 EEE Yönetmeliğine Uygundur

Connect with us.

rockwellautomation.com — expanding **human possibility**®

AMERICAS: Rockwell Automation, 1201 South Second Street, Milwaukee, WI 53204-2496 USA, Tel: (1) 414.382.2000, Fax: (1) 414.382.4444
EUROPE/MIDDLE EAST/AFRICA: Rockwell Automation NV, Pegasus Park, De Kleetlaan 12a, 1831 Diegem, Belgium, Tel: (32) 2 663 0600, Fax: (32) 2 663 0640
ASIA PACIFIC: Rockwell Automation, Level 14, Core F, Cyberport 3, 100 Cyberport Road, Hong Kong, Tel: (852) 2887 4788, Fax: (852) 2508 1846

Allen-Bradley, Compact 5000, CompactLogix, GuardLogix, Rockwell Automation, Rockwell Software, RSLinx, and Studio 5000 Logix Designer are trademarks of Rockwell Automation, Inc.
EtherNet/IP is a trademark of ODVA, Inc.

Trademarks not belonging to Rockwell Automation are property of their respective companies.

Publication 5069-IN017C-EN-P - December 2021 | Supersedes Publication 5069-IN017B-EN-P - November 2017 PN-648449
Copyright © 2021 Rockwell Automation, Inc. All rights reserved. Printed in the U.S.A.