**Installation Instructions**

Original Instructions

# TLSZR/L-GD2 Guard Locking Switch (Series F)

Catalog Numbers 440G-TZS21UPRH, 440G-TZS21UPLH, 440G-TZS21UTRH, 440G-TZS21UTLH

**IMPORTANT** Do not attempt to install this device unless the installation instructions have been studied and understood.

**IMPORTANT** Save these instructions for future use.



## Summary of Changes

This publication contains the following new or updated information. This list includes substantive updates only and is not intended to reflect all changes.

| Topic | Page |
|---|---|
| Updated Table 6 | 3 |

Installation of the TLSZR/L-GD2 Guard Locking Safety Switch must be in accordance with the following steps and stated specifications, and implemented by suitably competent personnel. Do not use the unit as a mechanical stop. You must fit guard stops and guides.

Adherence to the recommended maintenance instructions forms part of the warranty.

This device is intended to be part of the safety-related control system of a machine. Perform a risk assessment before installation to determine whether the specifications of this device are suitable for all operational and environmental characteristics of the machine.

**ATTENTION:** Perform a risk assessment. Only use safety switches that the Power to Lock principle activates (catalog numbers 440G-TZS21UPLH and 440G-TZS21UTLH), if the risk assessment shows the Power to Release principle (catalog number 440G-TZS21UPRH and 440G-TZS21UTRH) is inappropriate. This distinction is because the guard can immediately open after a loss of the power supply or upon activation of the unlocking signal.

## Specifications

### Table 1 - Safety Ratings

| Attribute | Value |
|---|---|
| Standards | IEC 60947-5-3, IEC 60947-5-1, IEC 61508, EN ISO 13849-1, ISO 14119, EN IEC 60947-5-2 |
| Safety classification | PLe, Category 4 to IEC 13949-1, IEC 61508 |
| Functional safety | See publication SAFETY-SR001 |
| Certifications | cULus Listed, TÜV Certified, UKCA Marked, and CE Marked for all applicable regulations/directives |

### Table 2 - Outputs(1)

| Attribute | Value |
|---|---|
| Safety | 2 N.C. or 3 N.C. direct opening action |
| Description | 2 x PNP, 0.2 A max |
| Status | ON (+24V DC) |

(1) Voltage drop 2V, max.

### Table 3 - Operating Characteristics

| Attribute | Value | |
|---|---|---|
| Operating principal | • Cat. No. 440G-TZS21UPRH and 440G-TZS21UTRH: Power to Release<br>• Cat. No. 440G-TZS21UPLH and 440G-TZS21UTLH: Power to Lock | |
| Locking distance, max [mm (in.)] | • Target distance: 13 (0.51)<br>• Clearance between actuator base and safety switch in the door-closed position: 5 (0.2) | |
| Locking force [N (lb)] | $F_{max}$ | • Plastic pins: 1950 (488)<br>• Steel bolts: 2600 (585) |
| | $F_{zh}$ (with EN/ISO 14119) | • Plastic pins: 1500 (337)<br>• Steel bolts: 2000 (450) |
| Output current, max (all outputs) | 200 mA | |
| Power consumption (no load supply current) | • Solenoid not energized: 50 mA<br>• Solenoid energized: 120 mA (260 mA inrush) | |
| Solenoid duty cycle | 33% | |
| Off-state current | < 0.5 mA DC | |
| Maximum number of safety switches (connected in series) | Unlimited. See Application Wiring Example on page 6 | |
| Operating voltage Ue | 24V DC +10% / -15% | |
| Frequency of operating cycle | 1 Hz max | |
| Actuation speed, max [mm (in.)/s] | 160 (6.29) | |
| Actuation speed, min [mm (in.)/minute] | 100 (3.94) | |
| Response time (off) | 45 ms first safety switch, 10 ms additional for each safety switch | |
| Utilization category (IEC 60947-5-2) | DC-13 24V 200 mA | |
| Impulse withstand voltage $U_{imp}$ | 250V | |
| Mechanical life | $1 \times 10^6$ cycles | |

**Table 4 - Environmental**

| Attribute | Value |
|---|---|
| Pollution degree | 3 |
| Protection class | 2 |
| Operating temperature [ °C ( °F)] | -10...+60 (-14...+140) |
| Operating altitude, max [m (ft)] | 2000 (6561.66) |
| Relative humidity | 5...95% |
| Risk time, max (1) | 45 ms |
| Rated insulation voltage $U_i$ | 500V |
| Enclosure ingress rating | NEMA 3, 4X, 12, 13, IP66, IP67, IP69K |
| Shock and vibration | IEC 68-2-27 30 g, 11 ms/IEC 68-2-6 10...55Hz |
| Radio frequency | • IEC 61000-4-3<br>• IEC 61000-4-6 |

(1) Time in which the safety outputs deactivate after the RFID door target moves outside of the operating distance.

**Table 5 - Physical Characteristics**

| Attribute | Value |
|---|---|
| Incorporated protections | • Short-circuit<br>• Overload<br>• Current limitation<br>• False pulse<br>• Transient noise<br>• Reverse polarity<br>• Overvoltage<br>• Thermal shutdown/restart |
| Material | • Housing: UL Approved glass-filled PBT<br>• Target: UL Approved glass-filled PBT<br>• Actuator: Stainless steel |
| Connection | M12 8-pin connector |
| Torque [N•m (lb•in)] | • M5 mounting bolts: 1.4 (12.39)<br>• Lid screws: 1.2 (10.62) |

# Installation

**Figure 1 - Typical Mounting [mm (in.)]**

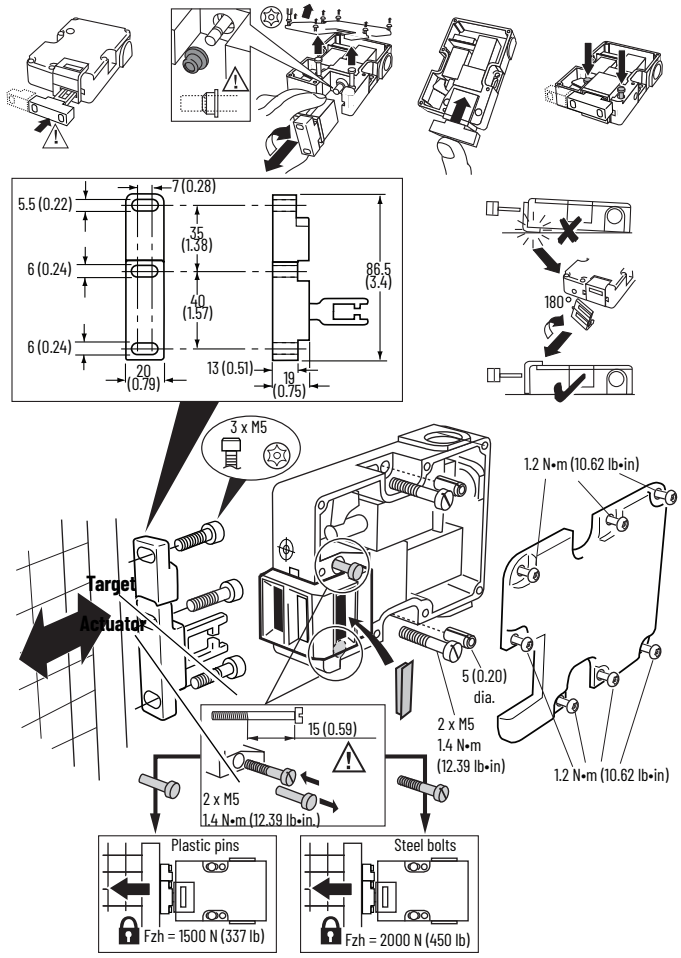


- Use nonremovable screws, bolts, or nuts to mount the safety switch and actuators. Do not over torque the mounting hardware.
- For use with flexible actuators only (catalog number 440G-A27143).
- TLS-Z guard locking safety switches are classified according to ISO 14119 as Type 4 switching devices. The RFID targets are classified as having a high level of coding.
- Take measures to minimize the need to defeat the safety switches. Manage the use and availability of spare RFID targets.

**Figure 2 - Actuator Placement**

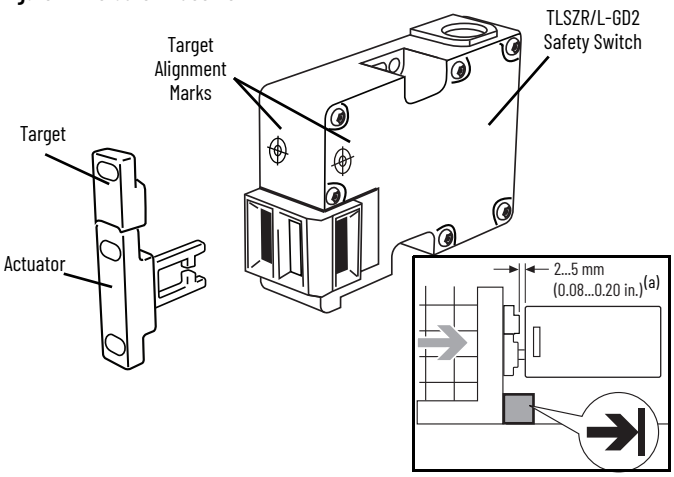


a) Minimum clearance in closed position: 2 mm (0.08 in.); maximum assured locking distance for locking: 5 mm (0.20 in.)

**Figure 3 - Allowable Approach Directions**

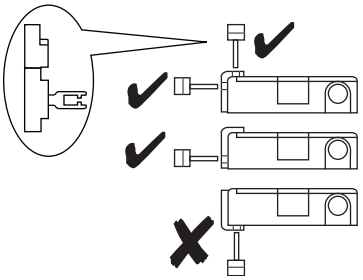

- Always mount the actuator and target as close coupled. The unit can approach the safety switch in any of the two entry slot positions shown.
- Do not approach the safety switch from the underside.

| | |
|---|---|
| **IMPORTANT** | Do not use the safety switch as a guard stop. Provide a separate mechanical stop to protect the safety switch. |

**Figure 4 - Auxiliary/Manual Release [mm (in.)]**

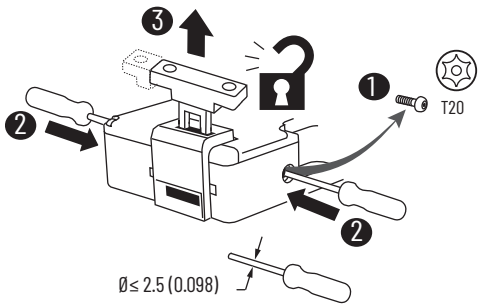


When the safety switch has power and is in the Locked state, operation of the auxiliary release causes the safety switch to enter a fault condition (the status indicator flashes red).

To reset the safety switch, cycle the power.

To manually release the safety switch, remove the secure Torx screws and press the internal mechanism.

**Figure 5 - Actuator Minimum Operating Radius [mm (in.)]**

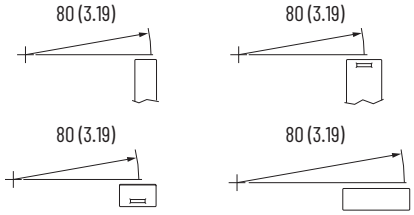


The minimum operating radius is for all planes of approach of the actuator key, both along the length and perpendicular to the key. Use the two setscrews on the actuator to optimize the key angle.

**Figure 6 - Fit the Override Covers (Cat. No. TLSZR-GD2)**

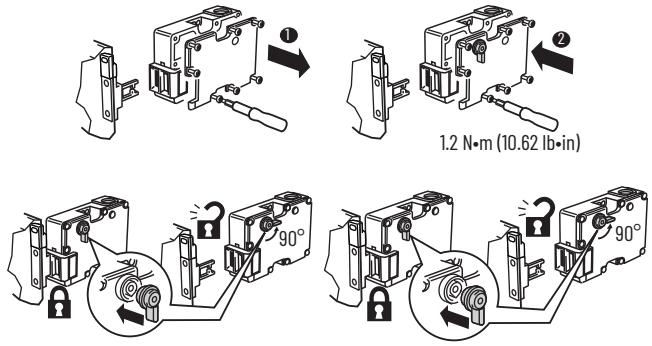


The cover with manual override key provides an auxiliary release function for use when power is not available to achieve automatic/electrical interlocking.

## Mount Restrictions

If you mount a TLS-Z safety switch close to another safety switch, a 440G-LZ guard locking switch, or a 440N-Z SensaGuard™ switch, the two inductive fields interact causing crosstalk, which results in nuisance faults and false operation. For correct operations, maintain a minimum distance of 75 mm (3 in.) between safety switches.

## Commissioning

Before use, the safety switch must first learn a new RFID door target. This step is not done at the factory, as there are two options:

- Multi-time learn: The safety switch can learn up to eight targets consecutively
- One-time learn: The safety switch can learn just one target, for life, non-reversible.

You can perform a one-time learn at any time. For example, the safety switch can multi-time learn consecutively four different targets, and then complete a one-time learn to help prevent the safety switch from learning any more targets.

| | |
|---|---|
| **IMPORTANT** | During the learning process, insert and withdraw the target and actuator from the safety switch together in their normal mounting configuration. If you introduce or withdraw either the target or the actuator without the other present, a nonrecoverable fault condition can occur. You must then cycle power. |

| | |
|---|---|
| **IMPORTANT** | After installation and commissioning, coat the actuator, safety switch, and safety switch lid fixing screws with tamper evident varnish or similar compound. |

## Multi-time Learn Process

*Learn the First Multi-time Target*

- Connect the safety switch to 24V DC (see Wiring Diagrams on page 6). The status/diagnostic indicator flashes the number of times the safety switch can learn a new target (eight times when new). The flash repeats, which indicates that the safety switch has not yet learned a target.
- The safety switch automatically starts the learn process once a target and actuator are placed into the door-closed and locked position of the safety switch.

| | |
|---|---|
| **IMPORTANT** | Leave the target/actuator unit in the door-closed position during the learning process. If you remove the unit during the learning process, the ability to learn an additional target is disabled. |

**Table 6 - Status Indicator Learning Sequence**

| Step | | Status Indicator |
|---|---|---|
| 1 | Target present | Flashes green, 1 Hz rate |
| 2 | Verifying target | Flashes green/red, 1 Hz rate (15 s) |
| 3 | Programming safety switch | Flashes green/red, 4 Hz rate (15 s) |
| 4 | Programming finalizing | Flashes green (number of learns left, 15 s) |
| 5 | Ready state (learn is complete) | Cat. No. TLSZR: Steady green<br>Cat. No. TLSZL: Steady red |

*Learn Additional New Multi-time Targets*

Mount the new target to the door and repeat Learn the First Multi-time Target on page 3. While finalizing the program, the status indicator flashes green the number of learns that remain.

## One-time Learn Process

- Follow the Multi-time Learn Process on page 3 except at step 6 of the learning sequence, withdraw the target and actuator from the safety switch until the status indicator shows steady red. Then replace the target and actuator back to the safety switch. You must complete this action within 15 s.
- The status indicator flashes and then turns solid as usual to indicate that learn is complete.

| | |
|---|---|
| **IMPORTANT** | Power-to-unlock safety switches: You must manually release the safety switch to withdraw the target and actuator away from the safety switch as described. |

**Table 7 - Unique Coded Diagnostics**

| Status Indicator - Flashes (4 Hz) (1) | Error Code |
|---|---|
| Red-red-red-green-green | The target is already learned. |
| Red-red-red-green-green-green | Bad RFID; the target moved out of range. |
| Red-red-red-green-green-green-green | Exceeded learning eight actuators. |
| Red-red-red-green-green-green-green-green | Unit locked to one-time learn; cannot learn another actuator. |

(1) Repeats until the unit is power cycled.

## Functional Testing

Perform a manual functional electric test:

- After installation
- After any maintenance or change of component
- If you use the guard infrequently
  - Less than once per month for SIL 3/PLe
  - Less than once per year for SIL 2/PLd

**ATTENTION:** During the functional test, confirm that no persons are in the danger area and that the machine startup causes no hazard.

1. Confirm that the guard door is open.
2. Connect the 24V DC power to pin 2. The safety switch conducts a self-testing regime at the end of which the status indicator shows steady red.
3. Test to confirm that the machine cannot start.
4. Confirm the lock control at pin 3 is set to 0V for PTR and 24V for PTL types.
5. Test again to confirm that the machine cannot start.
6. Close the guard door and then confirm that the guard is mechanically locked and the status indicator shows steady green.
7. Test to confirm that the machine can now start.
8. Change the lock control at pin 3 to 24V for PTR and 0V for PTL types.
9. Confirm the machine stops, the guard door is mechanically unlocked, and the machine cannot restart.

# Maintenance

Weekly:

- Check for signs of abuse or interference.
- Check for missing screws, particularly for the manual release, which can indicate abuse or interference.
- Check for damage, which can cause loss of sealing at the lid or conduit entry.

# Repair

If there is any malfunction or damage, do not attempt to repair or dismantle the unit. Replace the unit before you allow machine operation.

# Diagnostic

**Table 8 - Status Indicator**

| State | Status | Operating | Troubleshooting |
|---|---|---|---|
| Off | Not powered | – | – |
| Steady red | OSSD not active | Door/guard not locked, safety outputs off | – |
| Steady green | OSSD active | Door/guard closed and locked, safety outputs active | – |
| Flashes green | Power up test or Safety inputs not present | Door/guard closed and locked, no input signal | Check 24V DC or OSSD inputs (yellow and red wire). |
| Flashes red | 1 Hz: Recoverable fault | Unit failure (see Table 7) | Check OSSD. Outputs are not shorted to GND, 24V DC, or each other. Cycle power. |
| | 4 Hz: Nonrecoverable fault | | Cycle power. |

If an internal fault occurs, the safety switch disables the OSSD outputs. Safety A and Safety B to the safe state 0V and the status indicator flashes red at 1 Hz or 4 Hz, depending on the fault.

# Wiring

## Auxiliary Out Function

Lock and door position status are available for auxiliary output.

Lock status (catalog numbers 440G-TZS21UPRH and 440G-TZS21UPLH): The auxiliary output changes state when the lock either unlocks or locks independent of the OSSD status.

| Lock Status | Aux (QD Pin 1) |
|---|---|
| Unlocked | High, 24V (0.2 A max) |
| Locked | Low, 0V |

Door position status (catalog numbers 440G-TZS21UTRH and 440G-TZS21UTLH): The auxiliary output changes state when you either insert or withdraw the actuator key. If the auxiliary output is high (24V), the safety switch can lock and an internal microswitch senses the position of the actuator.

| Door Position Status | Aux (QD Pin 1) |
|---|---|
| Actuator key that is withdrawn | Low, 0V |
| Actuator key that is inserted | High, 24V (0.2 A max) |

## OSSD Outputs and Pulse Testing

The safety inputs are Safety A+ and Safety B+.

The OSSD outputs are Safety A and Safety B with the safe state defined as 0V (guard door open or not locked).

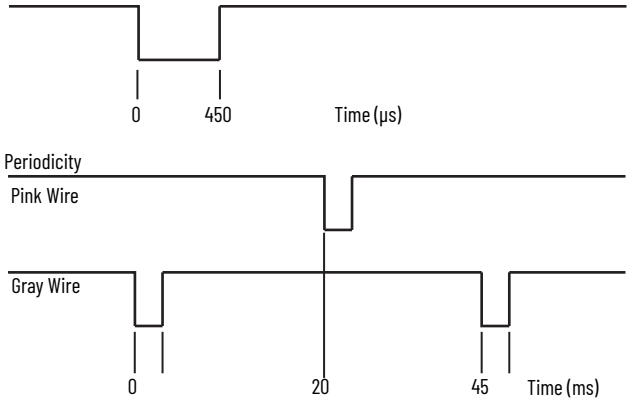


## Individual Pulses

Test pulses appear on each OSSD output. These pulses are approximately every 45 ms. The times that are shown are approximate and depend on the processing of the safety-related status.

**Table 9 - 8-Pin Micro (M12) Connections**

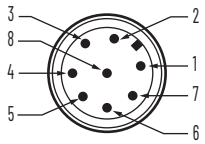


| Pin | Color | Function |
|---|---|---|
| 1 | White | Aux |
| 2 | Brown | 24V DC+ |
| 3 | Green | Lock command |
| 4 | Yellow | Safety B+ OSSD Input |
| 5 | Gray | Safety A OSSD Output |
| 6 | Pink | Safety B OSSD Output |
| 7 | Blue | Ground/0V |
| 8 | Red | Safety A+ OSSD Input |
| 8-pin cordset 889D-F8AB-*x* or cable version<br>*x* = 2 [2 m (6.6 ft)], 5 [5 m (16.4 ft)], or 10 [10 m (32.8 ft)] for standard cable lengths. | | |

## Troubleshooting

**Figure 7 - Series Circuit**

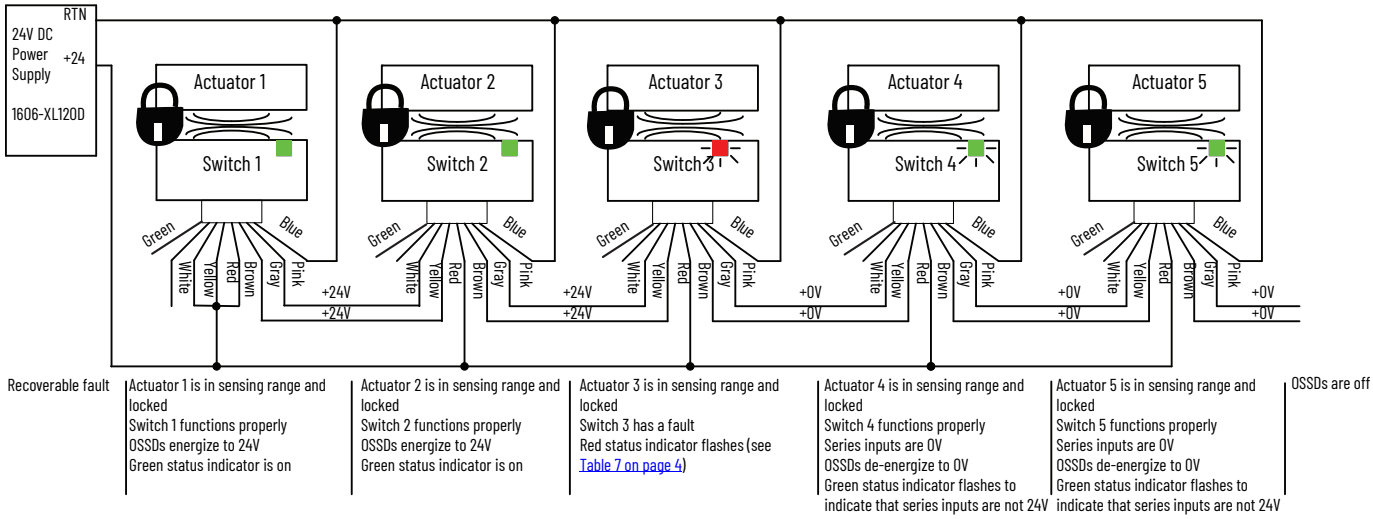

**Figure 8 - Unit Response Time**

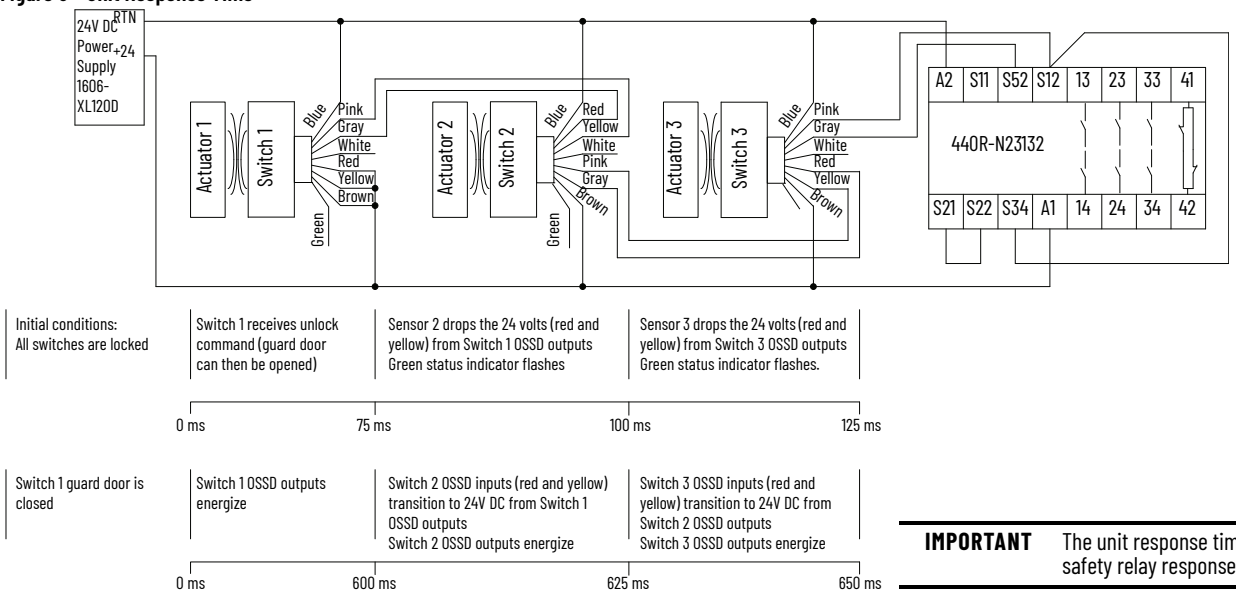


**IMPORTANT** The unit response time excludes the safety relay response time.

# Wiring Diagrams

**Figure 9 - Application Wiring Example**

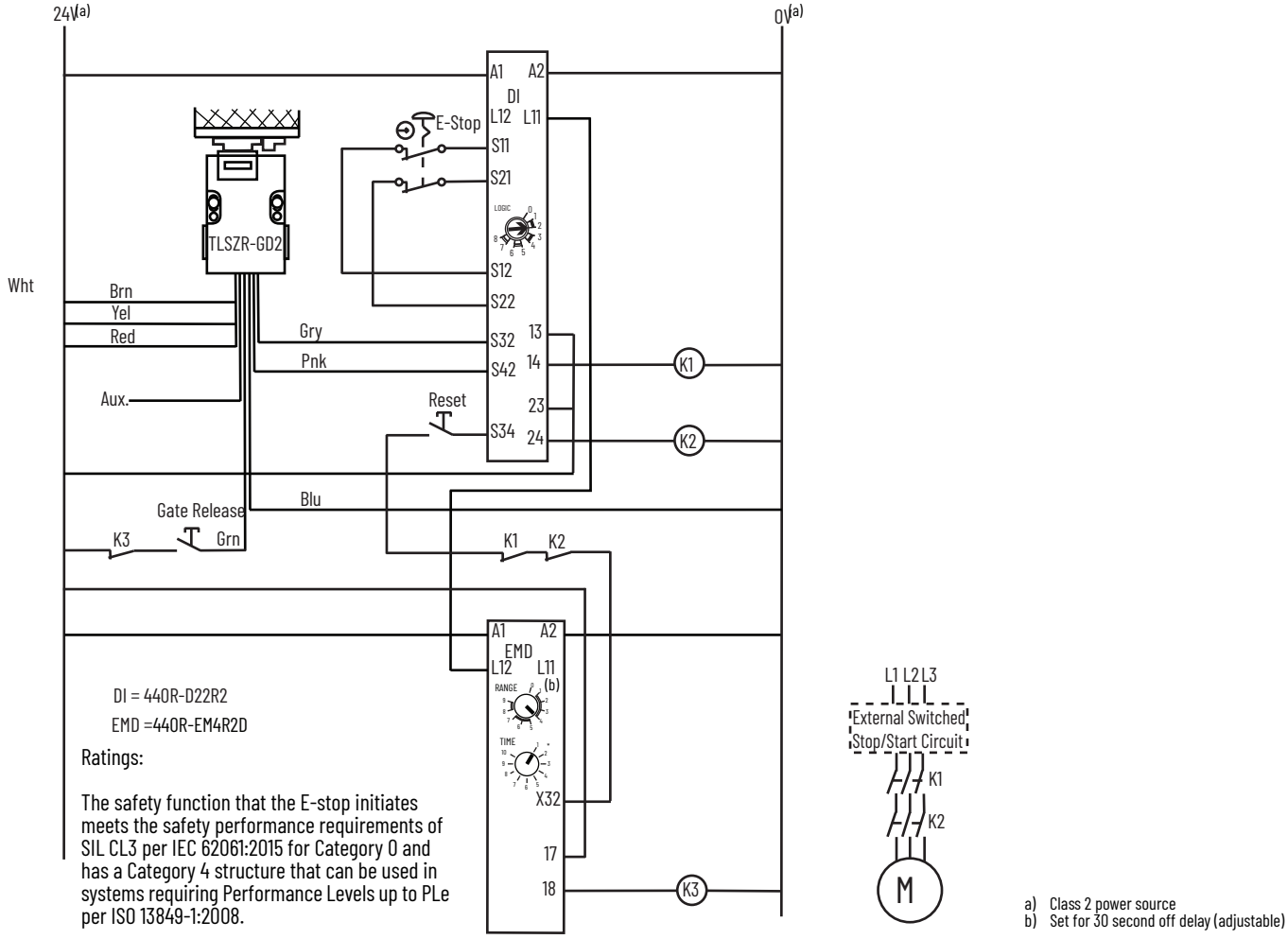


a) Class 2 power source
b) Set for 30 second off delay (adjustable)

## Approximate Dimensions

**Figure 10 - Safety Switch [mm (in.)]**

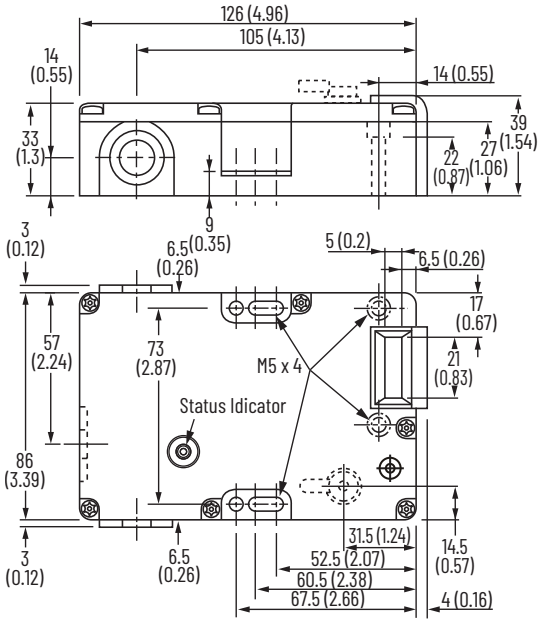


**Figure 11 - Target [mm (in.)]**

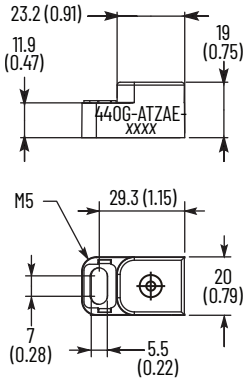


**Figure 12 - Actuator [mm (in.)]**

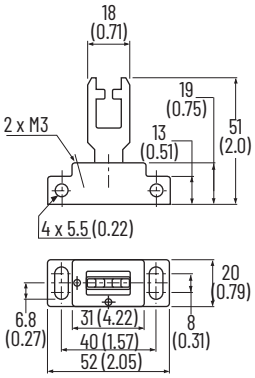


Use with flexible actuator only:
Cat. No. 440G-A-27143

**Figure 13 - Connections [mm (in.)]**

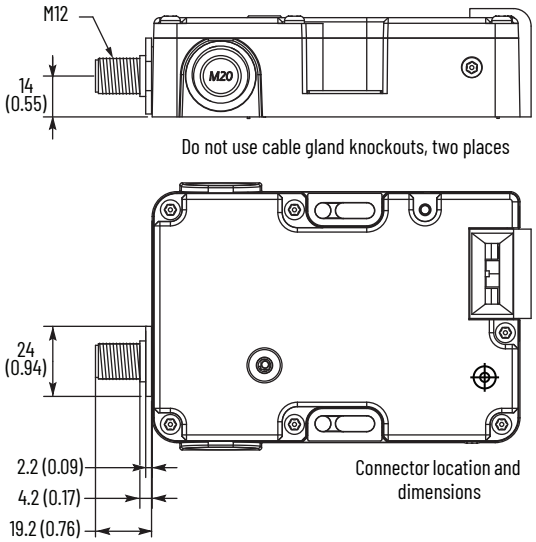


## Recommended Relays

Guardmaster® safety relay family (440R-D22R2, 440R-D22S2, 440R-S12R2, 440R-S13R2, 440R-GL4S2P, 440R-GL4S2T), MSR57, MSR126, MSR127, MSR131, MSR138, MSR211, MSR320, SmartGuard™, Safety PLC I/O.

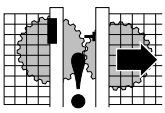

Verify that the machine is isolated and stopped whenever the interlocked guard door is open.

## Declaration of Conformity

### CE Conformity

Rockwell Automation declares that the products that are shown in this document conform with the 2014/30/EU Electromagnetic Compatibility Directive (EMC) and 2006/42/EC Machinery Directive (MD) and that the respective standards and/or technical specifications have been applied.

For a comprehensive CE certificate visit: rok.auto/certifications

### UKCA Conformity

Rockwell Automation declares that the products that are shown in this document are in compliance with 2016 No. 1091 Electromagnetic Compatibility Regulations and 2008 No. 1597 Supply of Machinery (Safety) Regulations and that the respective standards and/or technical specifications have been applied.

For a comprehensive UKCA certificate visit: rok.auto/certifications

## Rockwell Automation Support

Use these resources to access support information.

| | | |
|---|---|---|
| **Technical Support Center** | Find help with how-to videos, FAQs, chat, user forums, Knowledgebase, and product notification updates. | rok.auto/support |
| **Local Technical Support Phone Numbers** | Locate the telephone number for your country. | rok.auto/phonesupport |
| **Technical Documentation Center** | Quickly access and download technical specifications, installation instructions, and user manuals. | rok.auto/techdocs |
| **Literature Library** | Find installation instructions, manuals, brochures, and technical data publications. | rok.auto/literature |
| **Product Compatibility and Download Center (PCDC)** | Download firmware, associated files (such as AOP, EDS, and DTM), and access product release notes. | rok.auto/pcdc |

## Documentation Feedback

Your comments help us serve your documentation needs better. If you have any suggestions on how to improve our content, complete the form at rok.auto/docfeedback.

## Waste Electrical and Electronic Equipment (WEEE)

At the end of life, this equipment should be collected separately from any unsorted municipal waste.

Rockwell Automation maintains current product environmental compliance information on its website at rok.auto/pec.

Rockwell Otomasyon Ticaret A.Ş. Kar Plaza İş Merkezi E Blok Kat:6 34752 İçerenköy, İstanbul, Tel: +90 (216) 5698400 EEE Yönetmeliğine Uygundur

Connect with us.

**rockwellautomation.com** — expanding **human possibility**®

AMERICAS: Rockwell Automation, 1201 South Second Street, Milwaukee, WI 53204-2496 USA, Tel: (1) 414.382.2000, Fax: (1) 414.382.4444
EUROPE/MIDDLE EAST/AFRICA: Rockwell Automation NV, Pegasus Park, De Kleetlaan 12a, 1831 Diegem, Belgium, Tel: (32) 2663 0600, Fax: (32) 2 663 0640
ASIA PACIFIC: Rockwell Automation SEA Pte Ltd, 2 Corporation Road, #04-05, Main Lobby, Corporation Place, Singapore 618494, Tel: (65) 6510 6608, FAX: (65) 6510 6699
UNITED KINGDOM: Rockwell Automation Ltd., Pitfield, Kiln Farm, Milton Keynes, MK11 3DR, United Kingdom, Tel: (44)(1908) 838-800, Fax: (44)(1908) 261-917



Publication 440G-IN025B-EN-P - January 2024 | Supersedes Publication 440G-IN025A-EN-P - October 2023
PN-701118
10007628479 Ver 01