Installation Instructions

Original Instructions

PowerFlex DC Fiber-optic Interface Option Module

Catalog Numbers 20P-S5H781, SK-20P-2950, SK-20P-29501

The PowerFlex® DC Fiber-optic Interface option module and fiber-optic cables provides transmission of the reference, feedback, and status signals between a PowerFlex DC drive or PowerFlex Standalone Regulator and a PowerFlex DC Field Controller. A fiber-optic interface option module is required for each of the connected devices. A fiber-optic cable kit must be purchased separately and is used to connect the two option modules. See Required System Components on page 2 for information on the fiber-optic cable kits.

Product Advisories

Qualified Personnel

ATTENTION: Only qualified personnel familiar with DC drives and associated machinery should plan or implement the installation, startup and subsequent maintenance of the system. Failure to comply can result in personal injury and/or equipment damage.

Personal Safety

ATTENTION: To avoid an electric shock hazard, verify that all power to the device has been removed before you begin installation.

Product Safety

ATTENTION: This device contains ESD (Electrostatic Discharge) sensitive parts and assemblies. Static control precautions are required when you install, test, service, or repair this assembly. Component damage can result if ESD control procedures are not followed. If you are not familiar with static control procedures, reference any applicable ESD protection handbook.

Class 1 Light-emitting Diode Product

ATTENTION: Hazard of permanent eye damage exists when using optical transmission equipment. This product emits intense light and invisible radiation. Do not look into module ports or fiber-optic cable connectors.

IMPORTANT The Fiber Interface option module can only be used with a PowerFlex DC drive or Standalone Regulator with firmware revision 7.001 or later or a PowerFlex DC Field Controller with firmware revision 1.001 or later.

Parts List

These parts are included in the fiber-optic interface option module kit:

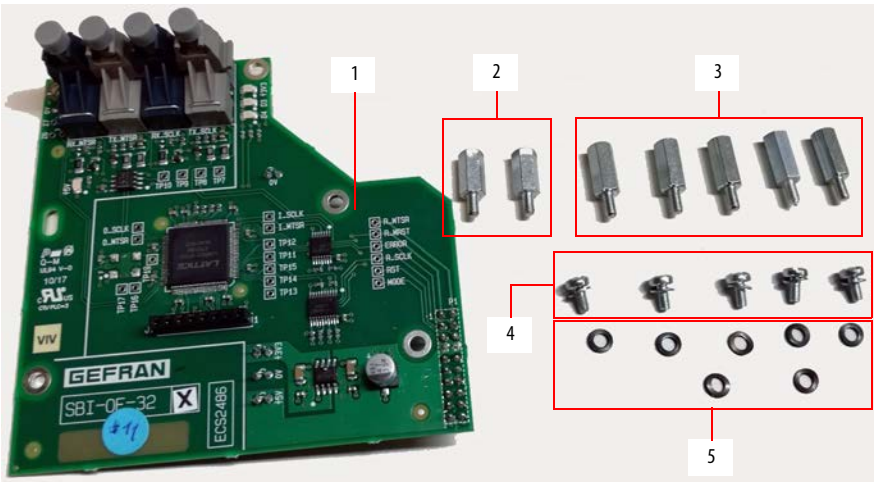

ID	Part	Quantity	Description
1	Fiber-optic interface circuit board	1	(see page 1)
2	12 mm (0.47 in.) stand off	2	Secured to the fiber-optic interface option module to support a resolver feedback option module (if used)
3	14 mm (0.55 in.) stand off	5	Secured to the main control board to support the fiber-optic interface option module
4	Screws and captive washers	5	Used to secure the fiber-optic interface option module to the 14 mm (0.55 in.) stand offs
5	Lock washers	7	Installed on the threaded end of the 14 mm (0.55 in.) standoffs
–	Static strap	1	Not shown in image

Required Tools

- Phillips screwdriver (PH2)
- Torx or hexalobular screwdriver
- Nut driver or wrench
- Screwdriver

Required System Components

One of these kits must be purchased separately for use with the fiber-optic interface option module:

- Catalog number SK-20P-2950 - contains three, 3 m (9.8 ft) fiber-optic cables
- Catalog number SK-20P-29501 - contains three, 5 m (16.4 ft) fiber-optic cables

What You Need to Do

Complete these steps to install the fiber-optic interface option module:

1. Remove Power from Each Device (see page 3)
2. Remove the Device Covers (see page 3)
3. Install the Fiber-optic Interface Circuit Board (see page 6)
4. Connect the Fiber-optic Cables (see page 10)
5. Install the Resolver Feedback Option Module (see page 10)
6. Replace the Device Covers (see page 10)
7. Configure the Fiber-optic Interface Option Module (see page 10)

Install the Fiber-optic Interface Module

Follow these steps to install the fiber-optic interface option module.

Remove Power from Each Device

ATTENTION: Remove power before making or breaking cable connections. When you remove or insert a cable connector with power applied, an electric arc can occur. An electric arc can cause personal injury or property damage by:

- sending an erroneous signal to your system field devices, causing unintended machine motion
- causing an explosion in a hazardous environment

Electrical arcing causes excessive wear to contacts on both the module and its mating connector. Worn contacts can create electrical resistance.

- Remove and lockout all incoming power to each of the devices in which you plan to install the fiber-optic interface circuit board.

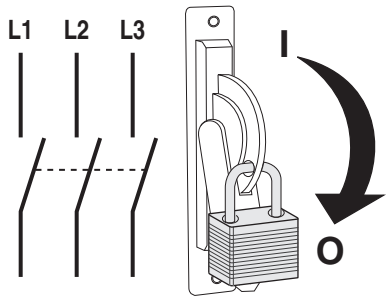

Remove the Device Covers

Follow the steps to remove the protective covers for the appropriate device frame size:

- See Remove the Covers from a Frame A Device on page 4.
- See Remove the Covers from a Frame B Device on page 5.

Remove the Covers from a Frame A Device

1. Disconnect the DPI cable from the HIM (if installed).
2. Loosen the captive screws that secure the bottom front cover to the drive, then slide the cover down and off the device chassis.

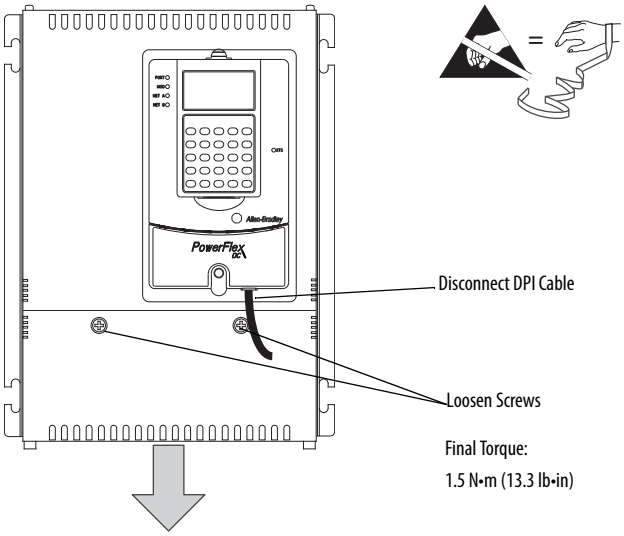

IMPORTANT The HIM assembly is connected to the control board with a cable. You must disconnect the cable from the control board before you can completely remove the top cover from the device.

3. Press in on the sides at the bottom edges of the top cover and, simultaneously, pull the bottom edge of the cover toward you to release it from the device chassis.
4. At the top of the device, pull the cover forward, away from the device, until the pins fit in the keyhole in the top of the cover, then carefully lift the cover off the device chassis.

   Continue with Disconnect the HIM Communication Cable on page 5.

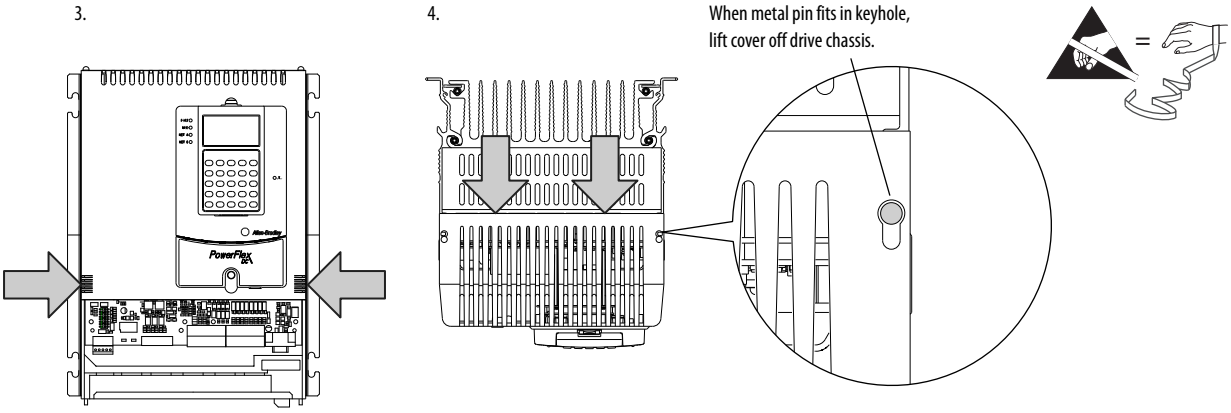

Remove the Covers from a Frame B Device

1. Disconnect the DPI cable from the HIM (if installed).

> **IMPORTANT** The HIM assembly is connected to the control board with a cable. You must disconnect the cable from the control board before you can completely remove the upper cover from the device.

2. Loosen, but do not remove, the screws that secure the top and bottom front covers to the device and slide the covers off the device chassis. Continue with Disconnect the HIM Communication Cable.

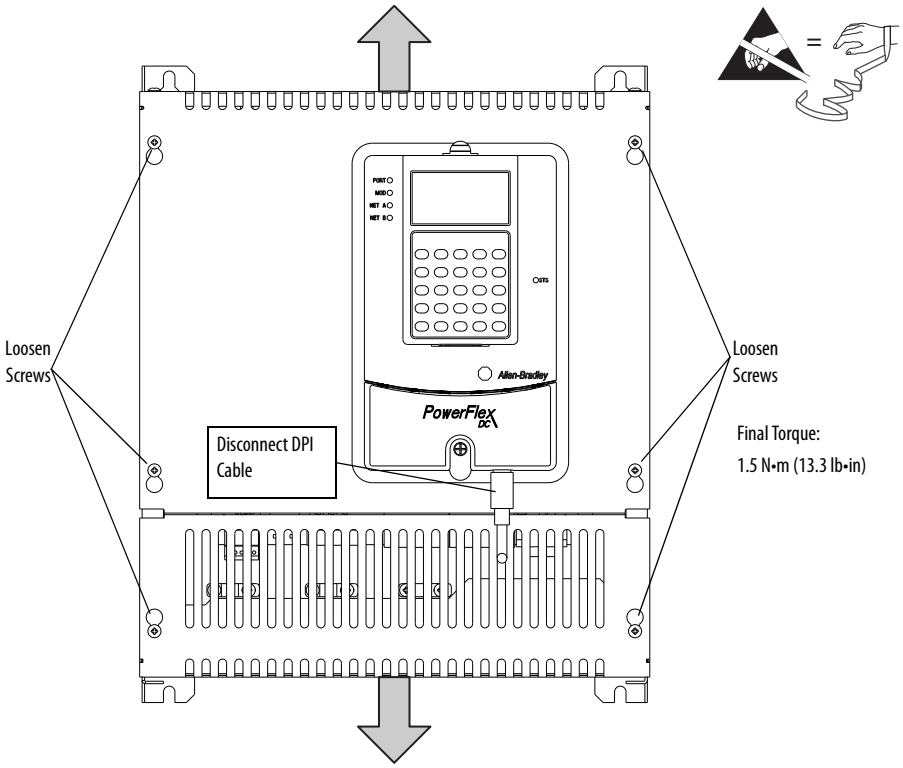

Disconnect the HIM Communication Cable

- Disconnect the HIM communication cable from the connector on the upper right corner of the control board and remove the cover.

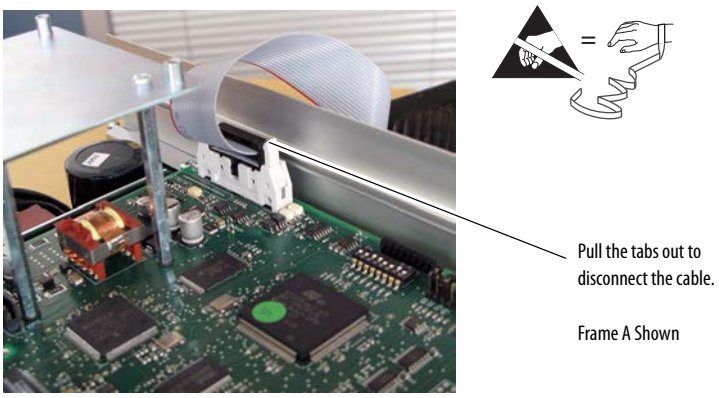

Install the Fiber-optic Interface Circuit Board

1. If the Resolver Feedback option module is installed, remove the module from the main control circuit board. See the PowerFlex DC Drive Frame A Hardware Service Manual, publication 20P-TG001, or the PowerFlex DC Drive Frame B Hardware Service Manual, publication 20P-TG002, for details.
2. Secure the five 14 mm (0.55 in.) (longer) stand-offs and lock washers to the main control board.

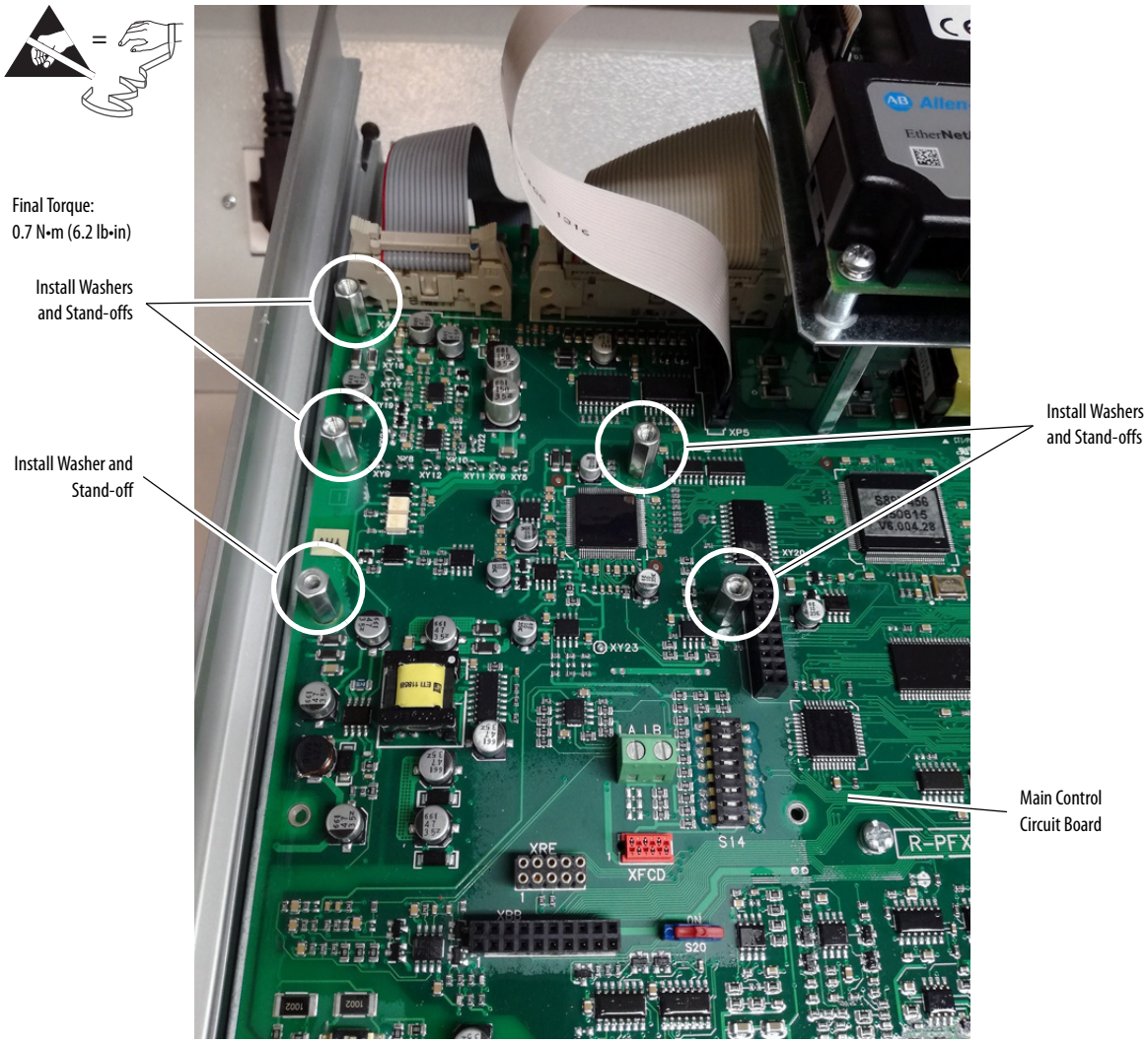

3. Carefully insert the stacker connector pins on the back of the fiber-optic interface board into connector XFO on the main control board.

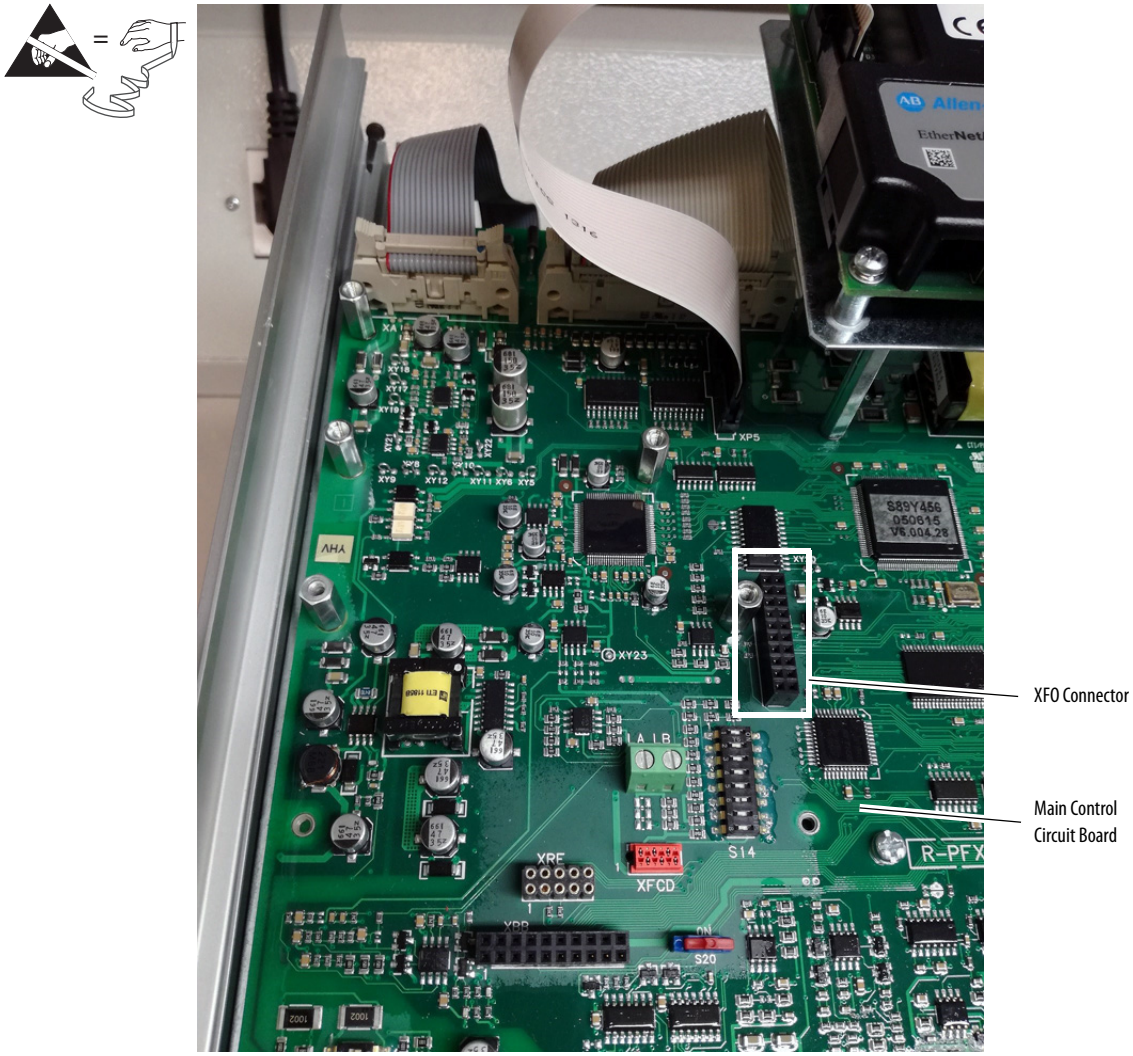

4. Secure the fiber-optic interface board to the stand-offs by using five screws with captive washers. If a resolver interface option module is used, install two 12 mm (0.47 in.) standoffs and lock washers in place of the bottom two screws.

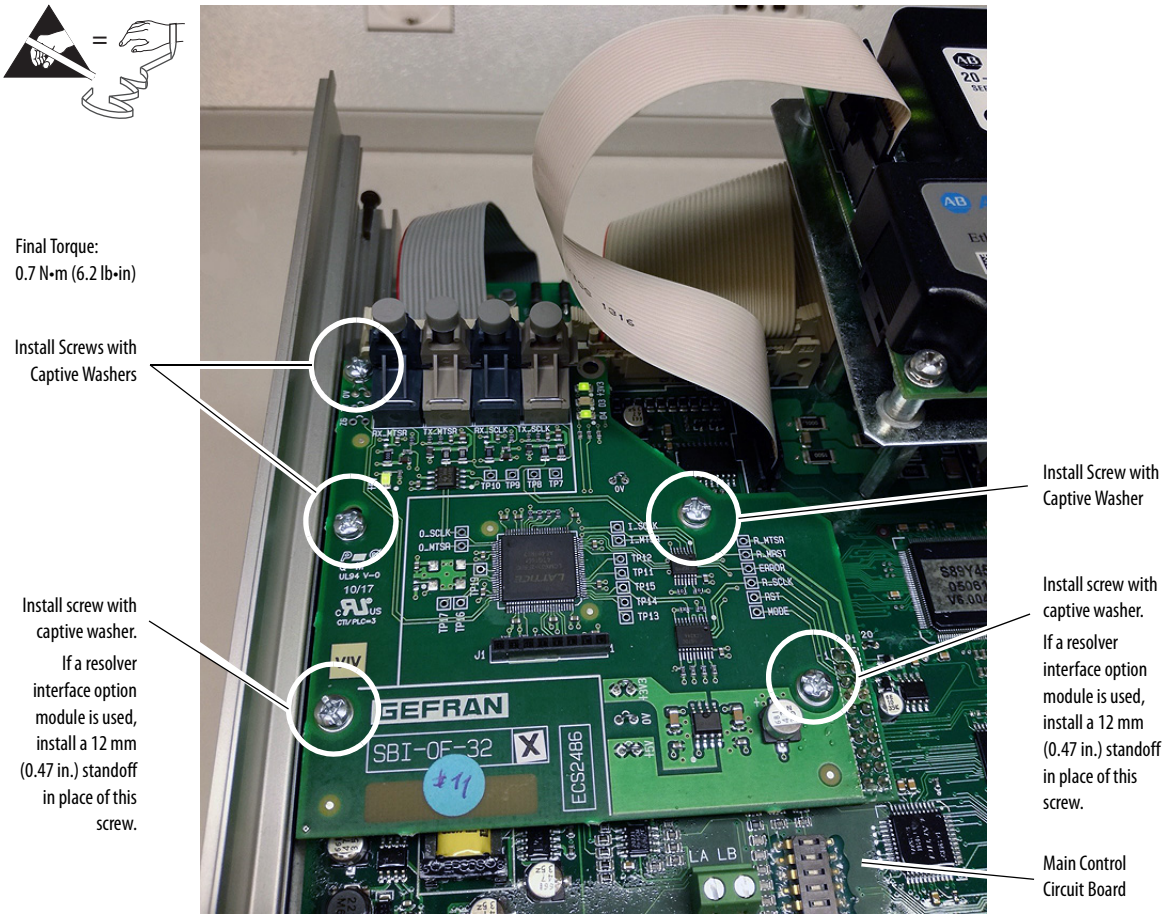

Fiber-optic Interface Option Module Connector and Light-emitting Diode Locations

The connectors and light-emitting diodes that are used for configuration are identified in this illustration and table.

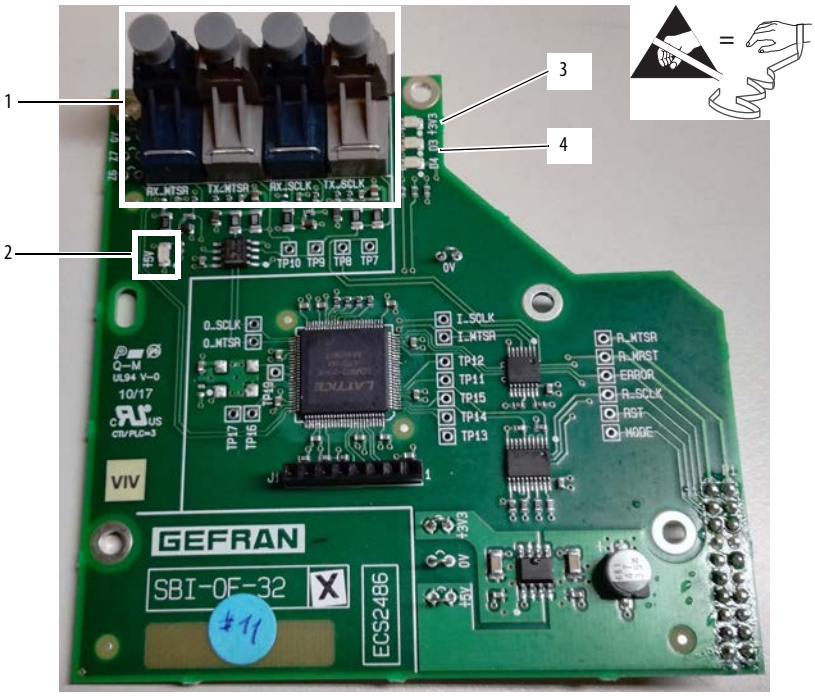

ID	Item	Description
1	Fiber-optic cable connectors	Connections for fiber-optic communication cables. See Connect the Fiber-optic Cables on page 10 for details
2	5V light-emitting diode	5V power light-emitting diode - solid green when power is applied
3	3.3V light-emitting diode	3.3V power light-emitting diode - solid green when power is applied
4	D3, D4 light-emitting diodes	Identifies the fiber-optic interface circuit board configuration. See the Fiber-optic Interface Circuit Board Configuration Status table.

IMPORTANT Control power must be applied to the main control circuit board for the fiber-optic interface circuit board and light-emitting diodes to operate.

Class 1 Light-emitting Diode Product

ATTENTION: Hazard of permanent eye damage exists when using optical transmission equipment. This product emits intense light and invisible radiation. Do not look into module ports or fiber-optic cable connectors.

Fiber-optic Interface Circuit Board Configuration Status

Light-emitting Diode State		Fiber-optic Interface Board Status
D3	D4	
Off	Off	Indicates that the circuit board is not configured
On	Off	Indicates that the circuit board is configured as the communication Master
Off	On	Indicates that the circuit board is configured as the communication Slave

Connect the Fiber-optic Cables

IMPORTANT Minimum inside bend radius for fiber-optic cable is 50 mm (2 in.). Any bends with a shorter inside radius can permanently damage the fiber-optic cable. Signal attenuation increases with decreased inside bend radii.

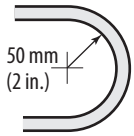

Connect the fiber-optic cables as shown in these tables and illustrations.

PowerFlex DC Drive (Master)	
Circuit Board Connector Label	**Fiber-optic Cable ID**
RX_MSTR	RX_MSTR
TX_MSTR	TX_MSTR
RX_SCLK	–
TX_SCLK	TX_SCLK

PowerFlex DC Field Controller (Slave)	
Circuit Board Connector Label	**Fiber-optic Cable ID**
RX_MSTR	RX_MSTR
TX_MSTR	TX_MSTR
RX_SCLK	RX_SLCK
TX_SCLK	–

PowerFlex DC Drive (Master) Connections Example

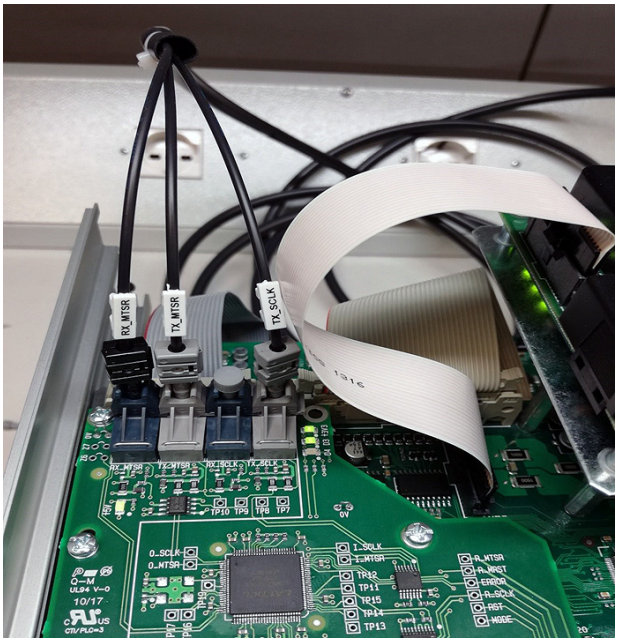

PowerFlex DC Field Controller (Slave) Connections Example

Install the Resolver Feedback Option Module

If used, install the resolver feedback option module in the reverse order of removal. See the PowerFlex DC Drive Frame A Hardware Service Manual, publication 20P-TG001, or the PowerFlex DC Drive Frame B Hardware Service Manual, publication 20P-TG002, for details.

Replace the Device Covers

Replace the protective covers on the device in the reverse order as described in Remove the Device Covers on page 3.

Configure the Fiber-optic Interface Option Module

See the PowerFlex DC Field Controller Programming Manual, 23PFC-PM001 for module parameter configuration information.

Additional Resources

These documents contain additional information concerning related products from Rockwell Automation.

Resource	Description
PowerFlex DC Field Controller Installation Instructions, publication 23PFC-IN001	Provides installation instructions for the PowerFlex DC Field Controller.
PowerFlex DC Field Controller Programming Manual, publication 23PFC-PM001	Provides information on how to startup, program, and troubleshoot the PowerFlex DC Field Controller.
PowerFlex DC Drive Technical Data, publication 20P-TD001	Provides detailed information on: • Basic product selection • Field controller specifications • Option specifications • Circuit protection
PowerFlex Digital DC Drive - Frame A Hardware Service Manual, publication 20P-TG001	Provides hardware test procedures and spare parts replacement instructions for Frame A PowerFlex DC Drives and Field Controllers.
PowerFlex Digital DC Drive - Frame B Hardware Service Manual, publication 20P-TG002	Provides hardware test procedures and spare parts replacement instructions for Frame B PowerFlex DC Drives and Field Controllers.
Industrial Automation Wiring and Grounding Guidelines, publication 1770-4.1	Provides general guidelines for installing a Rockwell Automation industrial system.
Product Certifications website, http://www.rockwellautomation.com/global/certification/overview.page	Provides declarations of conformity, certificates, and other certification details.

You can view or download publications at http://www.rockwellautomation.com/global/literature-library/overview.page. To order paper copies of technical documentation, contact your local Allen-Bradley distributor or Rockwell Automation sales representative.

Rockwell Automation Support

Use the following resources to access support information.

Technical Support Center	Knowledgebase Articles, How-to Videos, FAQs, Chat, User Forums, and Product Notification Updates.	https://rockwellautomation.custhelp.com/
Local Technical Support Phone Numbers	Locate the phone number for your country.	http://www.rockwellautomation.com/global/support/get-support-now.page
Direct Dial Codes	Find the Direct Dial Code for your product. Use the code to route your call directly to a technical support engineer.	http://www.rockwellautomation.com/global/support/direct-dial.page
Literature Library	Installation Instructions, Manuals, Brochures, and Technical Data.	http://www.rockwellautomation.com/global/literature-library/overview.page
Product Compatibility and Download Center (PCDC)	Get help determining how products interact, check features and capabilities, and find associated firmware.	http://www.rockwellautomation.com/global/support/pcdc.page

Documentation Feedback

Your comments will help us serve your documentation needs better. If you have any suggestions on how to improve this document, complete the How Are We Doing? form at http://literature.rockwellautomation.com/idc/groups/literature/documents/du/ra-du002_-en-e.pdf.

Rockwell Automation maintains current product environmental information on its website at http://www.rockwellautomation.com/rockwellautomation/about-us/sustainability-ethics/product-environmental-compliance.page.

Rockwell Otomasyon Ticaret A.Ş., Kar Plaza İş Merkezi E Blok Kat:6 34752 İçerenköy, İstanbul, Tel: +90 (216) 5698400

www.rockwellautomation.com

Power, Control and Information Solutions Headquarters

Americas: Rockwell Automation, 1201 South Second Street, Milwaukee, WI 53204-2496 USA, Tel: (1) 414.382.2000, Fax: (1) 414.382.4444
Europe/Middle East/Africa: Rockwell Automation NV, Pegasus Park, De Kleetlaan 12a, 1831 Diegem, Belgium, Tel: (32) 2 663 0600, Fax: (32) 2 663 0640
Asia Pacific: Rockwell Automation, Level 14, Core F, Cyberport 3, 100 Cyberport Road, Hong Kong, Tel: (852) 2887 4788, Fax: (852) 2508 1846

1S7A90

Publication 20P-IN078A-EN-P - November 2017