Installation Instructions

Original Instructions

Micro800 16-point Sink and 16-point Source 12/24V DC Output Modules

Catalog Numbers 2085-OV16, 2085-OB16

Topic	Page
Summary of Changes	1
Additional Resources	3
Overview	4
Mount the Module	4
Wire the Module	6
Specifications	7

Summary of Changes

This publication contains the following new or updated information. This list includes substantive updates only and is not intended to reflect all changes. Translated versions are not always available for each revision.

Topic	Page
Updated Certifications	8

Environment and Enclosure

ATTENTION: This equipment is intended for use in a Pollution Degree 2 industrial environment, in overvoltage Category II applications (as defined in EN/IEC 60664-1), at altitudes up to 2000 m (6562 ft) without derating.
This equipment is not intended for use in residential environments and may not provide adequate protection to radio communication services in such environments.

This equipment is supplied as open-type equipment for indoor use. It must be mounted within an enclosure that is suitably designed for those specific environmental conditions that will be present and appropriately designed to prevent personal injury resulting from accessibility to live parts. The enclosure must have suitable flame-retardant properties to prevent or minimize the spread of flame, complying with a flame spread rating of 5VA or be approved for the application if nonmetallic. The interior of the enclosure must be accessible only by the use of a tool. Subsequent sections of this publication may contain more information regarding specific enclosure type ratings that are required to comply with certain product safety certifications.

In addition to this publication, see the following:

- Industrial Automation Wiring and Grounding Guidelines, publication 1770-4.1, for more installation requirements.
- NEMA Standard 250 and EN/IEC 60529, as applicable, for explanations of the degrees of protection provided by enclosures.

Prevent Electrostatic Discharge

ATTENTION: This equipment is sensitive to electrostatic discharge, which can cause internal damage and affect normal operation. Follow these guidelines when you handle this equipment:

- Touch a grounded object to discharge potential static.
- Wear an approved grounding wriststrap.
- Do not touch connectors or pins on component boards.
- Do not touch circuit components inside the equipment.
- Use a static-safe workstation, if available.
- Store the equipment in appropriate static-safe packaging when not in use.

North American Hazardous Location Approval

The following information applies when operating this equipment in hazardous locations:	Informations sur l'utilisation de cet équipement en environnements dangereux:
Products marked "CL I, DIV 2, GP A, B, C, D" are suitable for use in Class I Division 2 Groups A, B, C, D, Hazardous Locations and nonhazardous locations only. Each product is supplied with markings on the rating nameplate indicating the hazardous location temperature code. When combining products within a system, the most adverse temperature code (lowest "T" number) may be used to help determine the overall temperature code of the system. Combinations of equipment in your system are subject to investigation by the local Authority Having Jurisdiction at the time of installation.	Les produits marqués "CL I, DIV 2, GP A, B, C, D" ne conviennent qu'à une utilisation en environnements de Classe I Division 2 Groupes A, B, C, D dangereux et non dangereux. Chaque produit est livré avec des marquages sur sa plaque d'identification qui indiquent le code de température pour les environnements dangereux. Lorsque plusieurs produits sont combinés dans un système, le code de température le plus défavorable (code de température le plus faible) peut être utilisé pour déterminer le code de température global du système. Les combinaisons d'équipements dans le système sont sujettes à inspection par les autorités locales qualifiées au moment de l'installation.
WARNING: EXPLOSION HAZARD • Do not disconnect equipment unless power has been removed or the area is known to be nonhazardous. • Do not disconnect connections to this equipment unless power has been removed or the area is known to be nonhazardous. Secure any external connections that mate to this equipment by using screws, sliding latches, threaded connectors, or other means provided with this product. • Substitution of components may impair suitability for Class I Division 2.	**WARNING: RISQUE D'EXPLOSION** • Couper le courant ou s'assurer que l'environnement est classé non dangereux avant de débrancher l'équipement. • Couper le courant ou s'assurer que l'environnement est classé non dangereux avant de débrancher les connecteurs. Fixer tous les connecteurs externes reliés à cet équipement à l'aide de vis, loquets coulissants, connecteurs filetés ou autres moyens fournis avec ce produit. • La substitution de composants peut rendre cet équipement inadapté à une utilisation en environnement de Classe I Division 2.

ATTENTION:

- This product is grounded through the DIN rail to chassis ground. Use zinc-plated chromate-passivated steel DIN rail to assure proper grounding. The use of other DIN rail materials (for example, aluminum or plastic) that can corrode, oxidize, or are poor conductors, can result in improper or intermittent grounding. Secure DIN rail to mounting surface approximately every 200 mm (7.8 in.) and use end-anchors appropriately. Be sure to ground the DIN rail properly. Refer to Industrial Automation Wiring and Grounding Guidelines, Rockwell Automation publication 1770-4.1, for more information.
- To comply with UL restrictions, this equipment must be powered from a source compliant with the following: Class 2 or Limited Voltage/Current.
- To comply with the CE Low Voltage Directive (LVD), all connected I/O must be powered from a source compliant with the following: Safety Extra Low Voltage (SELV) or Protected Extra Low Voltage (PELV).
- Failure to connect a bus terminator module to the last expansion I/O module will result in a controller hard fault.
- Do not wire more than 2 conductors on any terminal.

WARNING:

- When you connect or disconnect the Removable Terminal Block (RTB) with field side power applied, an electrical arc can occur. This could cause an explosion in hazardous location installations. Be sure that power is removed or the area is nonhazardous before proceeding.
- If you connect or disconnect wiring while the field-side power is on, an electric arc can occur. This could cause an explosion in hazardous location installations. Be sure that power is removed or the area is nonhazardous before proceeding.
- If you connect or disconnect the RTB with power applied, an electric arc can occur. This could cause an explosion in hazardous location installations. The RTB does not support "Removal and Insertion Under Power" (RIUP) capability. Do not connect or disconnect the RTB while power is applied. Be sure that power is removed before proceeding.
- If you insert or remove the module while backplane power is on, an electric arc can occur. This could cause an explosion in hazardous location installations. Be sure that power is removed before proceeding.
- Do not unscrew the RTB hold down screws and remove the RTB while power is on. This could cause an explosion in hazardous location installations. Be sure that power is removed before proceeding.
- Do not connect directly to line voltage. Line voltage must be supplied by a suitable, approved isolating transformer or power supply having short circuit capacity not exceeding 100 VA maximum or equivalent.
- When used in a Class I Division 2, hazardous location, this equipment must be mounted in a suitable enclosure with proper wiring method that complies with the governing electrical codes.

Additional Resources

Resource	Description
Micro830, Micro850, and Micro870 Programmable Controllers User Manual, publication 2080-UM002	A more detailed description of how to install and use your Micro830, Micro850, and Micro870 programmable controllers.
Micro800 Bus Terminator Module Installation Instructions, publication 2085-IN002	Information on installing the bus terminator module.
Industrial Automation Wiring and Grounding Guidelines, publication 1770-4.1	More information on proper wiring and grounding techniques.
Product Certifications website, rok.auto/certifications	Provides declarations of conformity, certificates, and other certification details.

You can view or download publications at rok.auto/literature.

Overview

The Micro800™ expansion I/O is a modular I/O that complements and extends the capabilities of Micro850® and Micro870® controllers. These expansion I/O modules interface with the controllers using an I/O expansion port.

I/O Module Overview

2085-OV16 shown

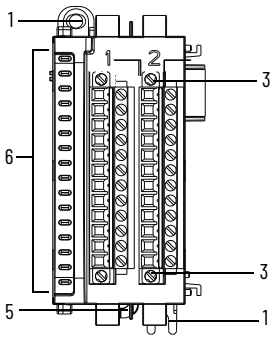

Front view

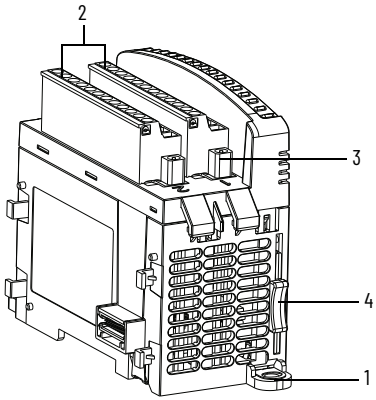

Right top view

Module Description

	Description		Description
1	Mounting screw hole / mounting foot	4	Module interconnect latch
2	Removable Terminal Block (RTB)	5	DIN rail mounting latch
3	RTB hold down screws	6	I/O status indicator

This equipment is sensitive to electrostatic discharge (ESD).
Follow ESD prevention guidelines when handling this equipment.

Mount the Module

For more information on proper grounding guidelines, see the Industrial Automation Wiring and Grounding Guidelines, publication 1770-4.1.

Module Spacing

Maintain spacing from objects such as enclosure walls, wireways, and adjacent equipment. Allow 50.8 mm (2 in.) of space on all sides for adequate ventilation, as shown.

Mounting Dimensions and DIN Rail Mounting

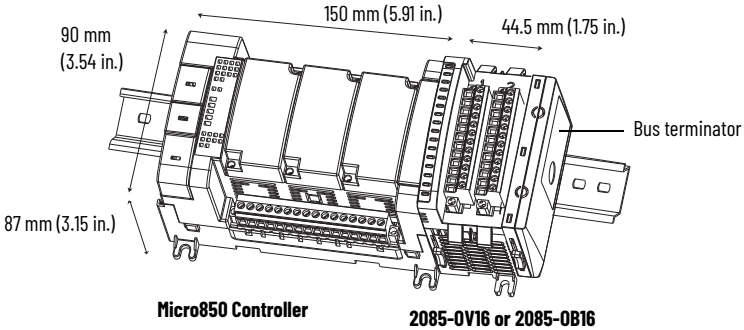

Mounting dimensions do not include mounting feet or DIN rail latches.

DIN Rail Mounting

The module can be mounted using the following DIN rails: 35 x 7.5 x 1 mm (EN 50022 - 35 x 7.5).

For environments with greater vibration and shock concerns, use the panel mounting method, instead of DIN rail mounting.

Before mounting the module on a DIN rail, use a screwdriver in the DIN rail latch and pry it downwards until it is in the unlatched position.

1. Hook the top of the DIN rail mounting area of the controller onto the DIN rail, and then press the bottom until the controller snaps onto the DIN rail.
2. Push the DIN rail latch back into the latched position.
   Use DIN rail end anchors (Allen-Bradley® part number 1492-EA35 or 1492-EAHJ35) for vibration or shock environments.

To remove your controller from the DIN rail, pry the DIN rail latch downwards until it is in the unlatched position.

Panel Mounting

The preferred mounting method is to use two M4 (#8) per module. Hole spacing tolerance: ±0.4 mm (0.016 in.). For mounting dimensions, see the Micro830®, Micro850, and Micro870 Programmable Controllers User Manual, publication 2080-UM002.

Follow these steps to install your module using mounting screws.

1. Place the module next to the controller against the panel where you are mounting it. Make sure that the controller and module are spaced properly.
2. Mark drilling holes through the mounting screw holes and mounting feet then remove the module.
3. Drill the holes at the markings, then replace the module and mount it.
   Leave the protective debris strip in place until you are finished wiring the module and any other devices.

System Assembly

The Micro800 expansion I/O module is attached to the controller or another I/O module with interconnecting latches and hooks, and the bus connector. The controller and expansion I/O modules must terminate with a 2085-ECR Bus Terminator module.

Be sure to lock the module interconnect latches and tighten the RTB hold down screws before applying power to the module.

For installation of the 2085-ECR module, see the Micro800 Bus Terminator Module Installation Instructions, publication 2085-IN002.

Field Wiring Connections

In solid-state control systems, grounding and wire routing helps limit the effects of noise due to electromagnetic interference (EMI).

Wire the Module

Included with your module are two single 12-pin Removable Terminal Blocks (RTB). Basic wiring of your module is shown below.

Basic Wiring to the Module

2085-OV16

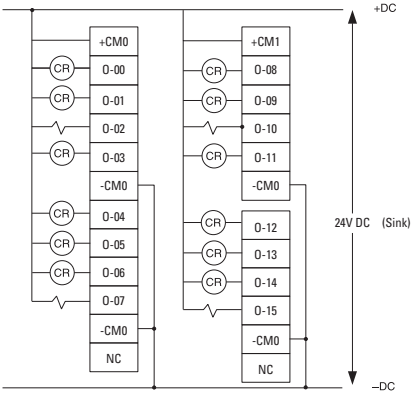

Terminal Block 1 **Terminal Block 2**

2085-OB16

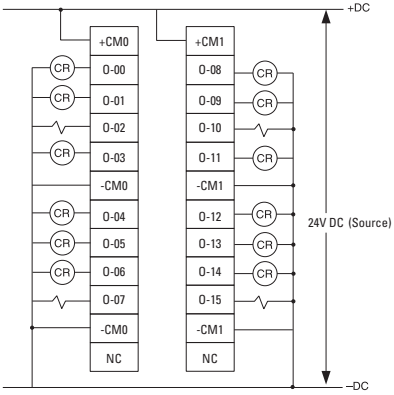

Terminal Block 1 **Terminal Block 2**

Specifications

General Specifications

Attribute	2085-OV16	2085-OB16
Number of outputs	16 (sinking)	16 (sourcing)
Dimensions HxWxD	44.5 x 90 x 87 mm (1.75 x 3.54 x 3.42 in.)	
Shipping weight, approx.	220 g (7.76 oz)	
Bus current draw, max	200 mA @ 5V DC	
Wire size		

	Min	Max	
Solid	0.34 mm^2 (22 AWG)	2.5 mm^2 (14 AWG)	Copper wire rated @ 90 °C (194 °F), or greater, 1.2 mm (3/64 in.) insulation max
Stranded	0.20 mm^2 (22 AWG)	2.5 mm^2 (14 AWG)	

Wiring category[1]	2 – on signal ports	
Insulation-stripping length	10 mm (0.39 in.)	
Terminal screw torque, max	0.5...0.6 N•m (4.4...5.3 lb•in) [2]	
Output circuit type	24V DC sink	24V DC source
Power dissipation, total	5 W	
Power supply	24V DC, Class 2	
Status indicators	16 yellow channel indicators	
Isolation voltage	50V (continuous), Reinforced Insulation Type, channel to system Type tested @ 720V AC for 60 s	
Enclosure type rating	None (open-style)	
North American temp code	T4	

(1) Use this Conductor Category information for planning conductor routing. Refer to Industrial Automation Wiring and Grounding Guidelines, publication 1770-4.1.

(2) RTB hold down screws should be tightened by hand. They should not be tightened using a power tool.

Output Specifications

Attribute	2085-OV16	2085-OB16
Operating voltage range	10...30V DC	
On-state voltage, min	10V DC	
On-state voltage, nom	24V DC	
On-state voltage, max	30V DC	
On-state current, max	0.5 A @ 30V DC, per output 8 A, per module	

Environmental Specifications

Attribute	Value
Temperature, operating	IEC 60068-2-1 (Test Ad, Operating Cold), IEC 60068-2-2 (Test Bd, Operating Dry Heat), IEC 60068-2-14 (Test Nb, Operating Thermal Shock): -20...+65 °C (-4...+149 °F)
Temperature, surrounding air, max	65 °C (149 °F)
Temperature, nonoperating	IEC 60068-2-1 (Test Ab, Unpackaged Nonoperating Cold), IEC 60068-2-2 (Test Bb, Unpackaged Nonoperating Dry Heat), IEC 60068-2-14 (Test Na, Unpackaged Nonoperating Thermal Shock): -40...+85 °C (-40...+185 °F)
Relative humidity	IEC 60068-2-30 (Test Db, Unpackaged Damp Heat): 5...95% noncondensing
Vibration	IEC 60068-2-6 (Test Fc, Operating): 2 g @ 10...500 Hz
Shock, operating	IEC 60068-2-27 (Test Ea, Unpackaged Shock): 25 g
Shock, nonoperating	IEC 60068-2-27 (Test Ea, Unpackaged Shock): 25 g – for DIN rail mount 35 g – for panel mount
Emissions	IEC 61000-6-4
ESD immunity	IEC 61000-4-2: 6 kV contact discharges 8 kV air discharges
Radiated RF immunity	IEC 61000-4-3: 10V/m with 1 kHz sine-wave 80% AM from 80...6000 MHz
EFT/B immunity	IEC 61000-4-4: ±2 kV @ 5 kHz on signal ports ±2 kV @ 100 kHz on signal ports
Surge transient immunity	IEC 61000-4-5: ±1 kV line-line(DM) and ±2 kV line-earth(CM) on signal ports
Conducted RF immunity	IEC 61000-4-6: 10V rms with 1 kHz sine-wave 80% AM from 150 kHz...80 MHz

Certifications

Certification (when product is marked)(1)	Value
c-UL-us	UL Listed Industrial Control Equipment, certified for US and Canada. See UL File E322657. UL Listed for Class I Division 2 Group A,B,C,D Hazardous Locations, certified for U.S. and Canada. See UL File E334470
CE	European Union 2014/30/EU EMC Directive, compliant with: EN 61326-1; Meas./Control/Lab., Industrial Requirements EN 61000-6-2; Industrial Immunity EN 61000-6-4; Industrial Emissions EN 61131-2; Programmable Controllers (Clause 8, Zone A & B) European Union 2011/65/EU RoHS, compliant with: EN IEC 63000; Technical documentation
RCM	Australian Radiocommunications Act, compliant with: EN 61000-6-4; Industrial Emissions
KC	Korean Registration of Broadcasting and Communications Equipment, compliant with: Article 58-2 of Radio Waves Act, Clause 3
Morocco	Arrêté ministériel n° 6404-15 du 29 ramadan 1436
UKCA	2016 No. 1091 – Electromagnetic Compatibility Regulations 2012 No. 3032 – Restriction of the Use of Certain Hazardous Substances in Electrical and Electronic Equipment Regulations

(1) See the Product Certification link at rok.auto/certifications for Declaration of Conformity, Certificates, and other certification details.

Notes:

Notes:

Notes:

Rockwell Automation Support

Use these resources to access support information.

Technical Support Center	Find help with how-to videos, FAQs, chat, user forums, Knowledgebase, and product notification updates.	rok.auto/support
Local Technical Support Phone Numbers	Locate the telephone number for your country.	rok.auto/phonesupport
Technical Documentation Center	Quickly access and download technical specifications, installation instructions, and user manuals.	rok.auto/techdocs
Literature Library	Find installation instructions, manuals, brochures, and technical data publications.	rok.auto/literature
Product Compatibility and Download Center (PCDC)	Download firmware, associated files (such as AOP, EDS, and DTM), and access product release notes.	rok.auto/pcdc

Documentation Feedback

Your comments help us serve your documentation needs better. If you have any suggestions on how to improve our content, complete the form at rok.auto/docfeedback.

Waste Electrical and Electronic Equipment (WEEE)

At the end of life, this equipment should be collected separately from any unsorted municipal waste.

Rockwell Automation maintains current product environmental compliance information on its website at rok.auto/pec.

Rockwell Otomasyon Ticaret A.Ş. Kar Plaza İş Merkezi E Blok Kat:6 34752, İçerenköy, İstanbul, Tel: +90 (216) 5698400 EEE Yönetmeliğine Uygundur

Connect with us.

rockwellautomation.com — expanding **human possibility**®

AMERICAS: Rockwell Automation, 1201 South Second Street, Milwaukee, WI 53204-2496 USA, Tel: (1) 414.382.2000
EUROPE/MIDDLE EAST/AFRICA: Rockwell Automation NV, Pegasus Park, De Kleetlaan 12a, 1831 Diegem, Belgium, Tel: (32) 2663 0600
ASIA PACIFIC: Rockwell Automation SEA Pte Ltd, 2 Corporation Road, #04-05, Main Lobby, Corporation Place, Singapore 618494, Tel: (65) 6510 6608
UNITED KINGDOM: Rockwell Automation Ltd., Pitfield, Kiln Farm, Milton Keynes, MK11 3DR, United Kingdom, Tel: (44)(1908) 838-800

Allen-Bradley, expanding human possibility, FactoryTalk, Micro800, Micro830, Micro850, Micro870, Rockwell Automation, and TechConnect are trademarks of Rockwell Automation, Inc.

Trademarks not belonging to Rockwell Automation are property of their respective companies.

Publication 2085-IN003F-EN-P - February 2024 | Supersedes Publication 2085-IN003E-EN-P - November 2022 PN-712119

Copyright © 2024 Rockwell Automation, Inc. All rights reserved. Printed in Singapore.