REVERSING DRUM SWITCHES • SIZES A & 1

SIZE A

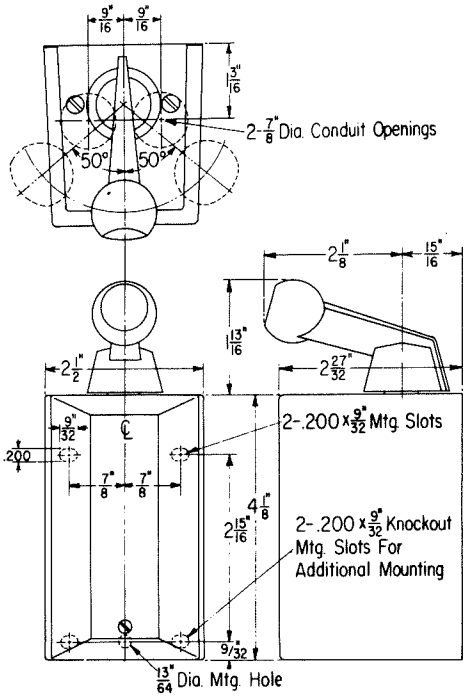

Surface Mounting
Approximate Shipping Weight 1½ Lbs.

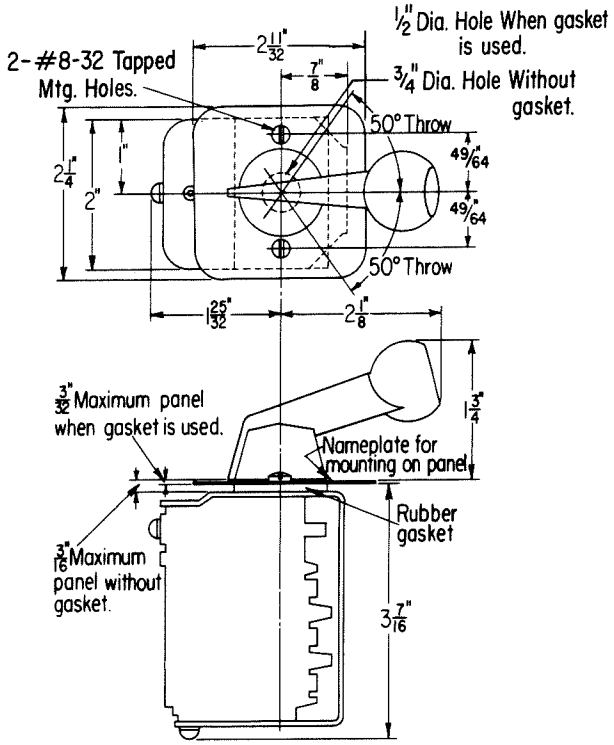

Panel Mounting
Approximate Shipping Weight 1 Lb.

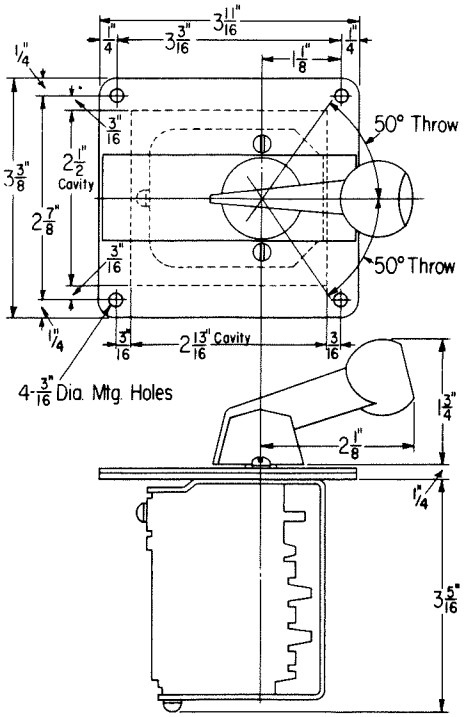

Cavity Mounting
Approximate Shipping Weight 1 lb.

Publication 350-4.0 — November, 1979
Supersedes Dimension Drawing 350 Sheet No. 1 Dated November, 1978

SIZE 1

Surface Mounting

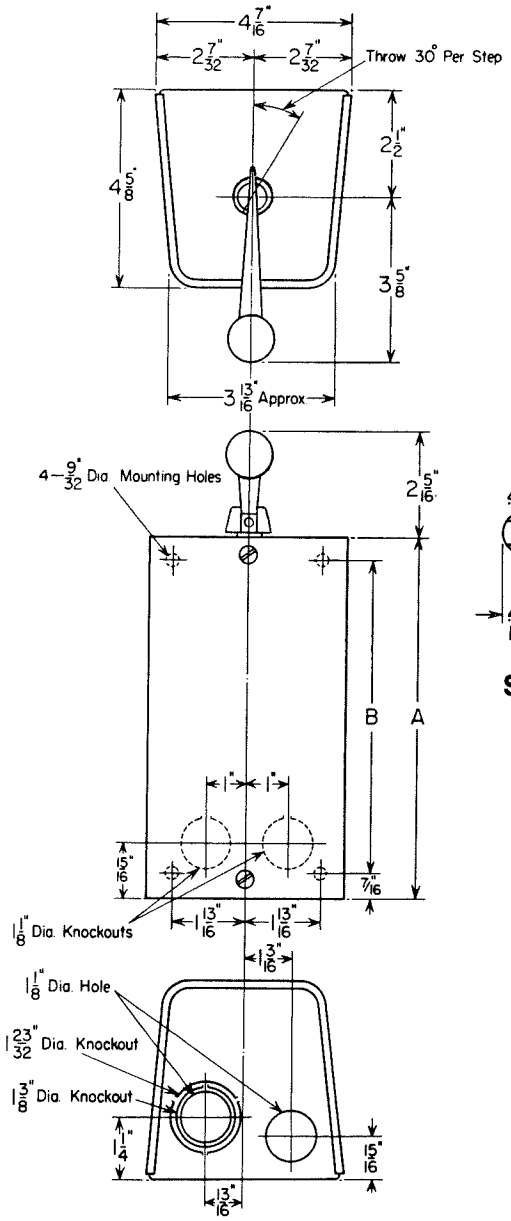

Cavity Mounting

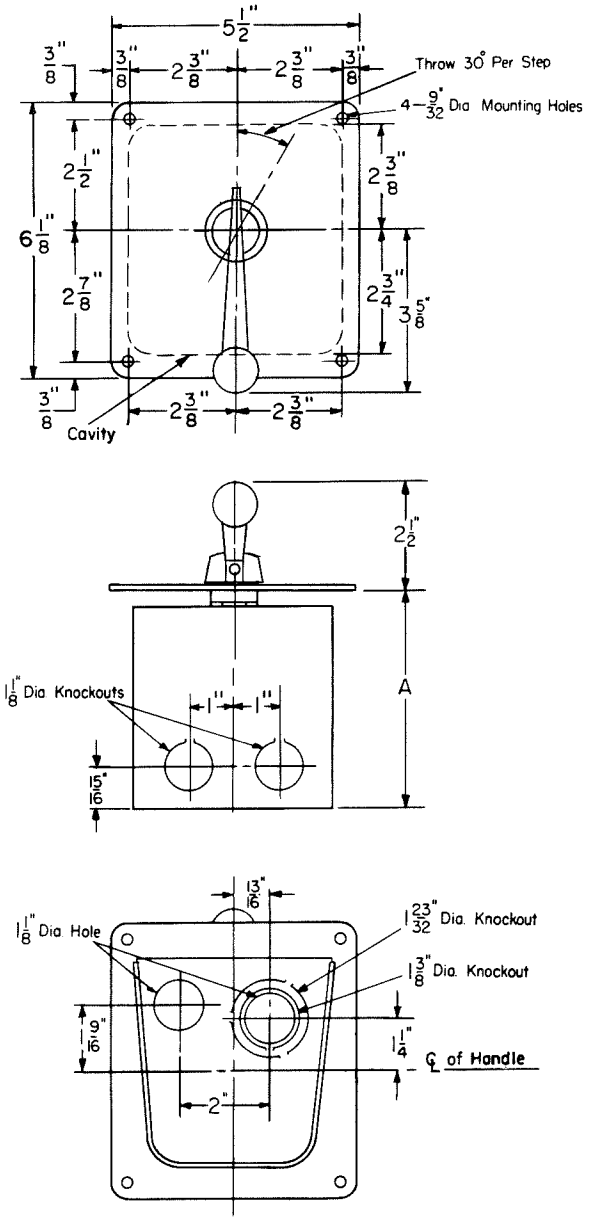

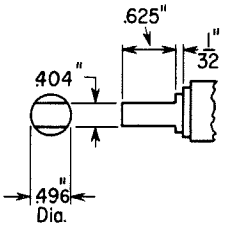

Shaft Details

Number of Cams	Dimension in Inches Surface Mounting A	Dimension in Inches Surface Mounting B	Approximate Shipping Weight in Lbs.
1-3	5-3/4	4-7/8	6-1/2
4	6-9/16	5-11/16	7-1/2
5-7	9	8-1/8	8-1/2
8-10	11-7/16	10-9/16	9-1/2
11-13	13-7/8	13	10-1/2
14	14-11/16	13-13/16	11-1/2
15	15-1/2	14-5/8	12-1/2
16	16-5/16	15-7/16	13-1/2
17	17-1/8	16-1/4	14-1/2

Open Type		
Number of Cams	Dimension in Inches Cavity Mounting A	Approximate Shipping Weight in Lbs.
3	4-3/4	6
4	5-9/16	7
5	6-3/8	8
6	7-3/16	8
7	9-5/16	8
8-10	11-3/4	9
11-13	14-3/16	10

Nema Type 1 General Purpose Enclosure		
Number of Cams	Dimension in Inches Cavity Mounting A	Approximate Shipping Weight in Lbs.
3	6-1/16	7
4	6-7/8	8
5-7	9-5/16	9
8-10	11-3/4	10
11-13	14-3/16	11

ALLEN-BRADLEY
Milwaukee, Wisconsin 53204