User Guide
Firmware Revision 5

Allen-Bradley

XM-441 Expansion Relay Module

Catalog Numbers 1440- REX00-04RD

Allen-Bradley • Rockwell Software

Rockwell Automation

Important User Information

Solid-state equipment has operational characteristics differing from those of electromechanical equipment. Safety Guidelines for the Application, Installation and Maintenance of Solid State Controls (publication SGI-1.1 available from your local Rockwell Automation sales office or online at http://www.rockwellautomation.com/literature/) describes some important differences between solid-state equipment and hard-wired electromechanical devices. Because of this difference, and also because of the wide variety of uses for solid-state equipment, all persons responsible for applying this equipment must satisfy themselves that each intended application of this equipment is acceptable.

In no event will Rockwell Automation, Inc. be responsible or liable for indirect or consequential damages resulting from the use or application of this equipment.

The examples and diagrams in this manual are included solely for illustrative purposes. Because of the many variables and requirements associated with any particular installation, Rockwell Automation, Inc. cannot assume responsibility or liability for actual use based on the examples and diagrams.

No patent liability is assumed by Rockwell Automation, Inc. with respect to use of information, circuits, equipment, or software described in this manual.

Reproduction of the contents of this manual, in whole or in part, without written permission of Rockwell Automation, Inc., is prohibited.

Throughout this manual, when necessary, we use notes to make you aware of safety considerations.

	**WARNING:** Identifies information about practices or circumstances that can cause an explosion in a hazardous environment, which may lead to personal injury or death, property damage, or economic loss.
	**ATTENTION:** Identifies information about practices or circumstances that can lead to personal injury or death, property damage, or economic loss. Attentions help you identify a hazard, avoid a hazard, and recognize the consequence
	**SHOCK HAZARD:** Labels may be on or inside the equipment, for example, a drive or motor, to alert people that dangerous voltage may be present.
	**BURN HAZARD:** Labels may be on or inside the equipment, for example, a drive or motor, to alert people that surfaces may reach dangerous temperatures.
IMPORTANT	Identifies information that is critical for successful application and understanding of the product.

Safety Approvals

The following information applies when operating this equipment in hazardous locations.	**Informations sur l'utilisation de cet équipement en environnements dangereux.**
Products marked "CL I, DIV 2, GP A, B, C, D" are suitable for use in Class I Division 2 Groups A, B, C, D, Hazardous Locations and nonhazardous locations only. Each product is supplied with markings on the rating nameplate indicating the hazardous location temperature code. When combining products within a system, the most adverse temperature code (lowest "T" number) may be used to help determine the overall temperature code of the system. Combinations of equipment in your system arfe subject to investigation by the local Authority Having Jurisdiction at the time of installation.	Les produits marqués "CL I, DIV 2, GP A, B, C, D" ne conviennent qu'à une utilisation en environnements de Classe I Division 2 Groupes A, B, C, D dangereux et non dangereux. Chaque produit est livré avec des marquages sur sa plaque d'identification qui indiquent le code de température pour les environnements dangereux. Lorsque plusieurs produits sont combinés dans un système, le code de température le plus défavorable (code de température le plus faible) peut être utilisé pour déterminer le code de température global du système. Les combinaisons d'équipements dans le système sont sujettes à inspection par les autorités locales qualifiées au moment de l'installation.
WARNING: **EXPLOSION HAZARD** • Do not disconnect equipment unless power has been removed or the area is known to be nonhazardous. • Do not disconnect connections to this equipment unless power has been removed or the area is known to be nonhazardous. Secure any external connections that mate to this equipment by using screws, sliding latches, threaded connectors, or other means provided with this product. • Substitution of components may impair suitability for Class I, Division 2. • If this product contains batteries, they must only be changed in an area known to be nonhazardous.	**WARNING:** **RISQUE D'EXPLOSION** • Couper le courant ou s'assurer que l'environnement est classé non dangereux avant de débrancher l'équipement. • Couper le courant ou s'assurer que l'environnement est classé non dangereux avant de débrancher les connecteurs. Fixer tous les connecteurs externes reliés à cet équipement à l'aide de vis, loquets coulissants, connecteurs filetés ou autres moyens fournis avec ce produit. • La substitution de composants peut rendre cet équipement inadapté à une utilisation en environnement de Classe I, Division 2. • S'assurer que l'environnement est classé non dangereux avant de changer les piles.

IMPORTANT Wiring to or from this device, which enters or leaves the system enclosure, must utilize wiring methods suitable for Class I, Division 2 Hazardous Locations, as appropriate for the installation in accordance with the product drawings as indicated in the following table.

Model	**Catalog Number**	**Haz Location Drawings***		**Model**	**Catalog Number**	**Haz Location Drawings***	
		w/o Barriers	**w/ Barriers**			**w/o Barriers**	**w/ Barriers**
XM-120	1440-VST0201RA	48178-HAZ	48179-HAZ	XM-320	1440-TPS0201RB	48238-HAZ	48239-HAZ
XM-121	1440-VLF0201RA			XM-360	1440-TPR0600RE	48295-HAZ	48299-HAZ
XM-122	1440-VSE0201RA			XM-361	1440-TUN0600RE		
XM-123	1440-VAD0201RA			XM-361	1440-TTC0600RE		
XM-160	1440-VDRS0600RH	51263-HAZ	51264-HAZ	XM-440	1440-RMA0004RC	48240-HAZ	N/A
XM-161	1440-VDRS0606RH			XM-441	1440-REX0004RD	48241-HAZ	N/A
XM-162	1440-VDRP0600RH			XM-442	1440-REX0304RG	48642-HAZ	N/A
XM-220	1440-SPD0201RB	48640-HAZ	48641-HAZ				

* Drawings are available on the included CD

Introduction

This chapter provides an overview of the XM-441 Expansion Relay module. It also discusses the components of the module.

Introducing the XM-441 Expansion Relay Module

The XM-441 Expansion Relay module provides an additional four relays to any XM measurement module or to the XM-440 Master Relay module. It is a member of the Allen-Bradley™ XM® Series, a family of DIN rail mounted condition monitoring and protection modules that operate both in stand-alone applications or integrate with Programmable Logic Controllers (PLCs) and control system networks.

The XM-441 offers four high power relays suitable for use in almost any protection application. Up to two Relay Expansion modules may be connected to the XM-440 Master Relay module, providing an additional four or eight relays.

The XM-441 is not an intelligent XM module. It must be connected to either an XM measurement module or the XM-440 Master Relay module in order to function. In addition, it does not consume a node address on the DeviceNet bus. The XM-441 simply extends the circuitry of its host module.

No direct configuration of the XM-441 is required. Setup of the XM-441 relays is through its host XM measurement or XM-440 Master Relay module.

XM-441 Module Components

The XM-441 consists of a terminal base unit and an instrument module. The XM-441 Expansion Relay Module and the XM-943 Expansion Relay Terminal Base are shown below.

Figure 1.1 XM-441 Module Components

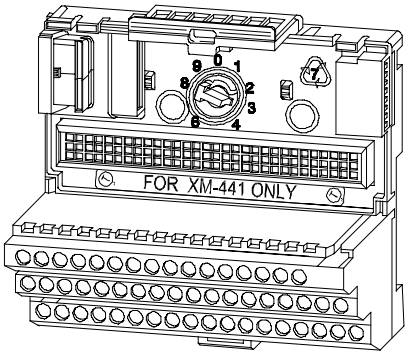

XM-943 Expansion Relay Module Terminal Base Unit
Cat. No. 1440-TB-D

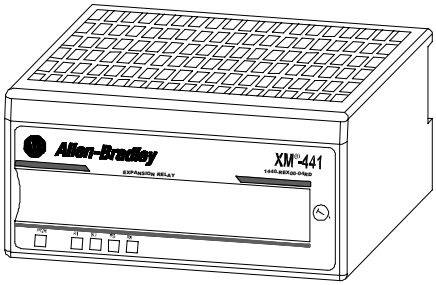

XM-441 Expansion Relay Module
Cat. No. 1440-REX00-04RD

- XM-943 Expansion Relay Terminal Base Unit - A DIN rail mounted base unit that provides terminations for all field wiring required by the XM-441.
- XM-441 Expansion Relay Module - Mounts on the XM-943 terminal base unit via a keyswitch and a 96-connector. The XM-441 contains four on-board relays to expand relay capabilities to the XM module to which it is connected.

IMPORTANT The host XM module controls the operation of the relays in the Expansion Relay module. Refer to the manual for the specific module for configuration information.

Using this Manual

This manual introduces you to the XM-441 Relay Expansion module. It is intended for anyone who installs or uses the XM-441 Relay Expansion module.

Organization

To help you navigate through this manual, it is organized in chapters based on these tasks and topics.

Chapter 1 "Introduction" contains an overview of this manual and the XM-441 module

Chapter 2 "Installing the XM-441 Expansion Relay Module" describes how to install, wire, and use the XM-441 module.

Appendix A "Specifications" lists the technical specifications for the XM-441 module.

For definitions of terms used in this Guide, see the Glossary at the end of the Guide.

Document Conventions

There are several document conventions used in this manual, including the following:

The XM-441 Expansion Relay module is referred to as XM-441, Expansion Relay module, device, or module throughout this manual.

TIP A tip indicates additional information which may be helpful.

EXAMPLE This convention presents an example.

Installing the XM-441 Expansion Relay Module

This chapter discusses how to install and wire the XM-441 Expansion Relay module. It also describes the module indicators and the basic operations of the module.

ATTENTION

Environment and Enclosure

This equipment is intended for use in a Pollution Degree 2 Industrial environment, in overvoltage Category II applications (as defined in IED publication 60664–1), at altitudes up to 2000 meters without derating.

This equipment is supplied as “open type” equipment. It must be mounted within an enclosure that is suitably designed for those specific environmental conditions that will be present, and appropriately designed to prevent personal injury resulting from accessibility to live parts. The interior of the enclosure must be accessible only by the use of a tool. Subsequent sections of this publication may contain additional information regarding specific enclosure type ratings that are required to comply with certain product safety certifications.

See NEMA Standards publication 250 and IEC publication 60529, as applicable, for explanations of the degrees of protection provided by different types of enclosures.

XM Installation Requirements

This section describes wire, power and grounding requirements for an XM system.

Wiring Requirements

Use solid or stranded wire. All wiring should meet the following requirements:

- 14 to 22 AWG copper conductors without pretreatment; 8 AWG required for grounding the DIN rail for electromagnetic interference (emi) purposes
- Recommended strip length 8 millimeters (0.31 inches)
- Minimum insulation rating of 300V
- Soldering the conductor is forbidden
- Wire ferrules can be used with stranded conductors; copper ferrules recommended

ATTENTION

See the XM Documentation and Configuration Utility CD for Hazardous Locations installation drawings. The XM Documentation and Configuration Utility CD is packaged with the XM modules.

Power Requirements

Before installing your module, calculate the power requirements of all modules interconnected via their side connectors. The total current draw through the side connector cannot exceed 3A. Refer to the specifications for the specific modules for power requirements.

ATTENTION

A separate power connection is necessary if the total current draw of the interconnecting modules is greater than 3A.

IMPORTANT Power connections are not made directly to the XM-441 module. Rather power is passed via the side connector from the Expansion Module's host module. Refer to that module's User Manual for further details on power requirements.

Grounding Requirements

Use these grounding requirements to ensure safe electrical operating circumstances, and to help avoid potential emi and ground noise that can cause unfavorable operating conditions for your XM system.

DIN Rail Grounding

The XM modules make a chassis ground connection through the DIN rail. The DIN rail must be connected to a ground bus or grounding electrode conductor using 8 AWG or 1 inch copper braid. See Figure 2.1.

Use zinc-plated, yellow-chromated steel DIN rail (Allen-Bradley part no. 199-DR1 or 199-DR4) or equivalent to assure proper grounding. Using other DIN rail materials (e.g. aluminum, plastic, etc.), which can corrode, oxidize, or are poor conductors can result in improper or intermittent platform grounding.

Figure 2.1 XM System DIN Rail Grounding

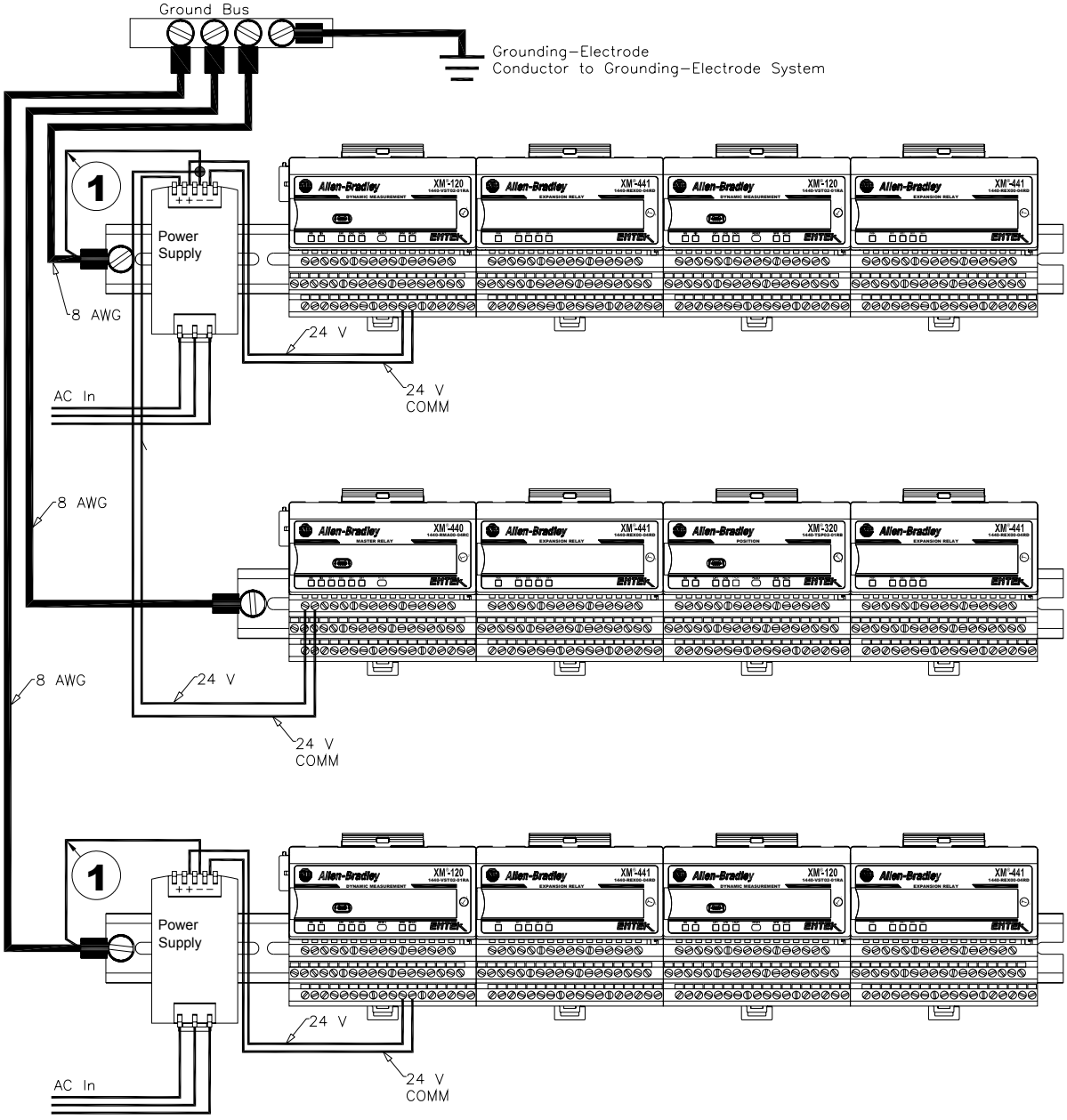

1 Use 14 AWG wire.

The grounding wire can be connected to the DIN rail using a DIN Rail Grounding Block (Figure 2.2).

Figure 2.2 DIN Rail Grounding Block

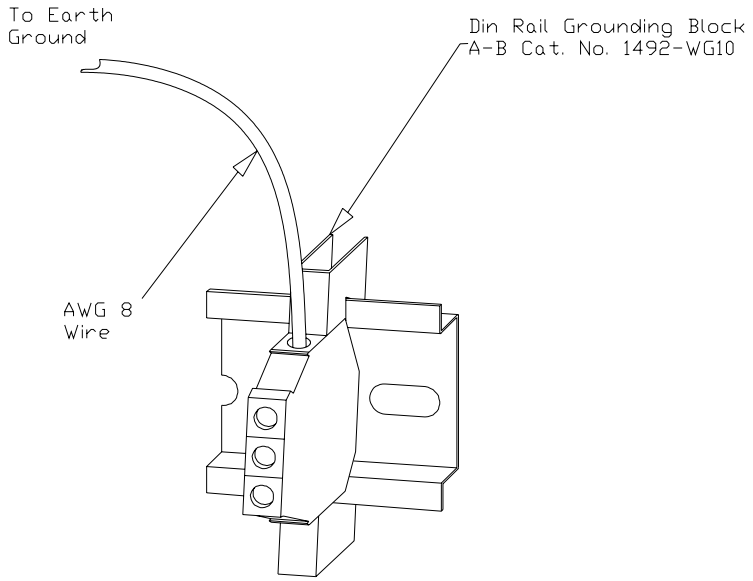

Panel/Wall Mount Grounding

The XM modules can also be mounted to a conductive mounting plate that is grounded. See Figure 2.4. Use the grounding screw hole provided on the terminal base to connect the mounting plate the Chassis terminals.

Figure 2.3 Grounding Screw on XM Terminal Base

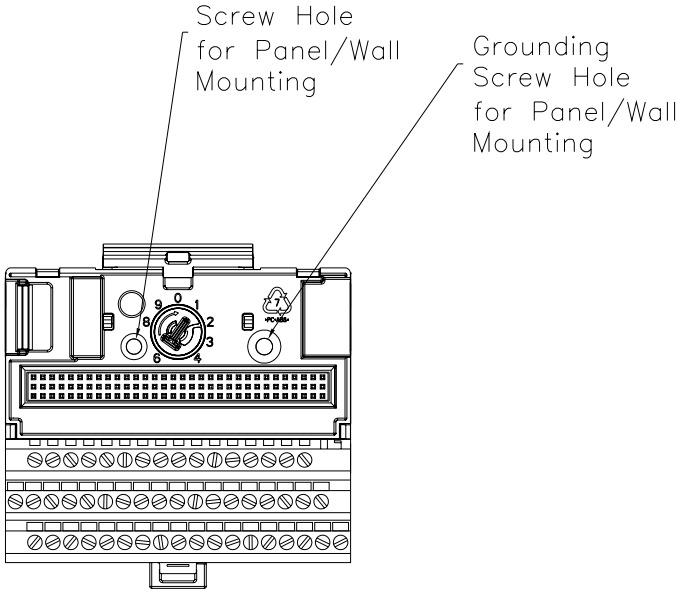

Figure 2.4 Panel/Wall Mount Grounding

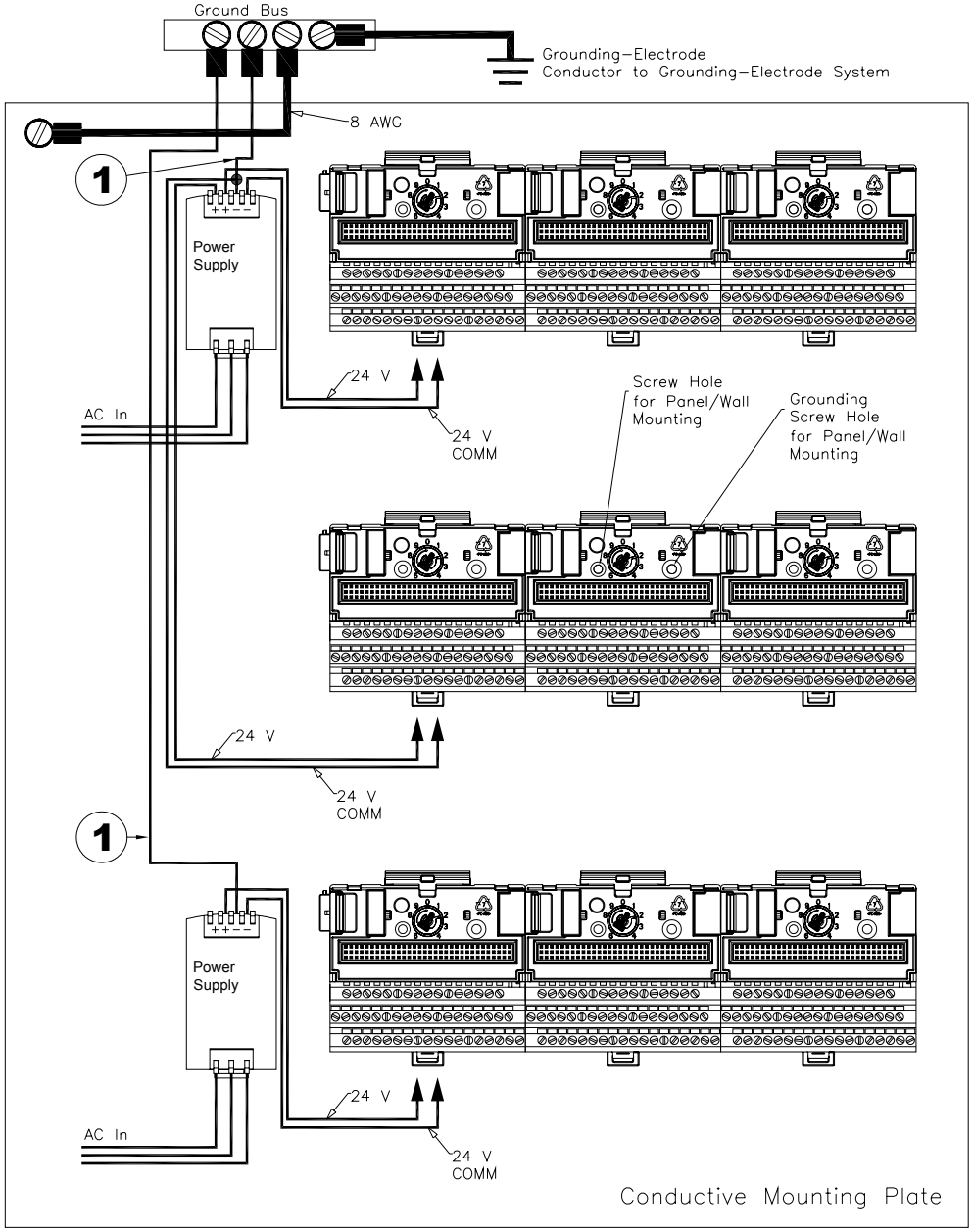

1 Use 14 AWG wire.

Mounting the Terminal Base Unit

The XM family includes several different terminal base units to serve all of the XM modules. The XM-943 terminal base, Cat. No. 1440-TB-D, is the only terminal base unit used with the XM-441.

The terminal base can be DIN rail or wall/panel mounted. Refer to the specific method of mounting below.

ATTENTION

The XM modules make a chassis ground connection through the DIN rail. Use zinc plated, yellow chromated steel DIN rail to assure proper grounding. Using other DIN rail materials (e.g. aluminum, plastic, etc.), which can corrode, oxidize or are poor conductors can result in improper or intermittent platform grounding.

You can also mount the terminal base to a grounded mounting plate. Refer to Panel/Wall Mount Grounding on page 15.

DIN Rail Mounting

Use the following steps to mount the XM-943 terminal base unit on a DIN rail (A-B pt no. 199-DR1 or 199-DR4).

IMPORTANT

The XM-943 terminal base unit is mounted to the right of the XM module to which it is providing additional relays.

1. Position the terminal base on the 35 x 7.5mm DIN rail (A).

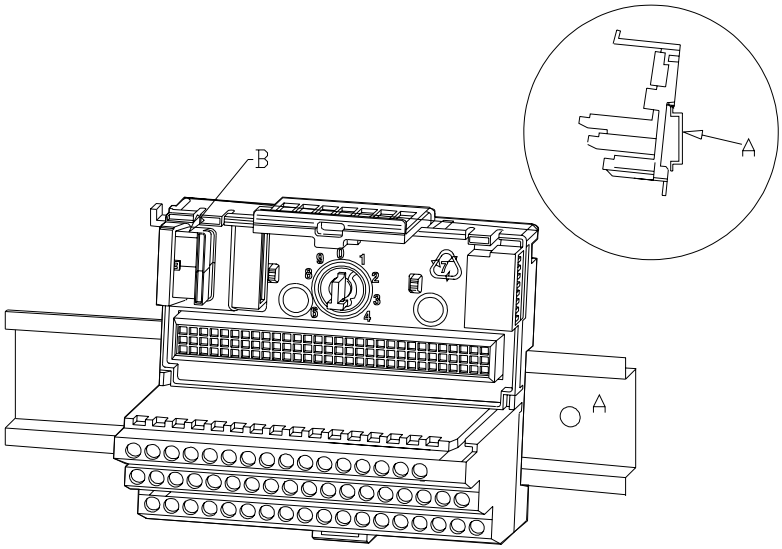

Position terminal base at a slight angle and hook over the top of the DIN rail.

2. Make certain the side connector (B) if **fully retracted** into the base unit.

3. Slide the terminal base unit over tight against the neighboring terminal base. Make sure the hook on the terminal base slides under the edge of the adjacent base and the side connector is fully retracted.

4. Rotate the terminal base onto the DIN rail with the top of the rail hooked under the lip on the rear of the terminal base.

5. Press down on the terminal base unit to lock the terminal base on the DIN rail. If the terminal base does not lock into place, use a screwdriver or similar device to open the locking tab, press down on the terminal base until flush with the DIN rail and release the locking tab to lock the base in place.

6. Gently push the side connector into the side of the neighboring terminal base to complete the backplane connection.

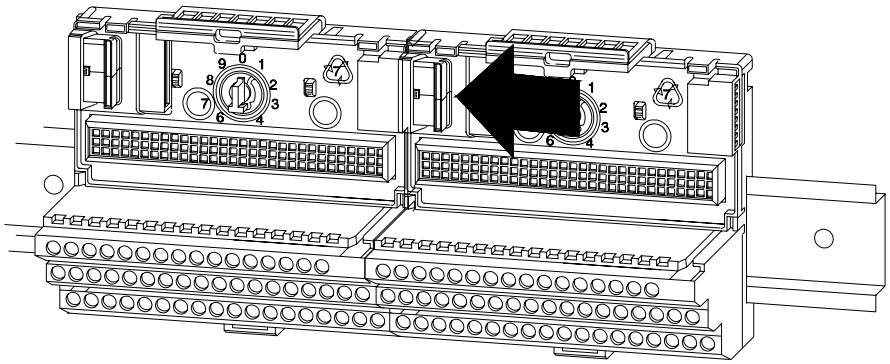

7. Repeat the above steps to install another Expansion Relay terminal base unit. Up to two Expansion Relay modules can be added to each XM-440 Master Relay module.

Panel/Wall Mounting

Installation on a wall or panel consists of:

- laying out the drilling points on the wall or panel
- drilling the pilot holes for the mounting screws
- installing the terminal base units and securing them to the wall or panel

Use the following steps to install the XM-943 terminal base on a wall or panel.

1. Lay out the required points on the wall/panel as shown in the drilling dimension drawing below.

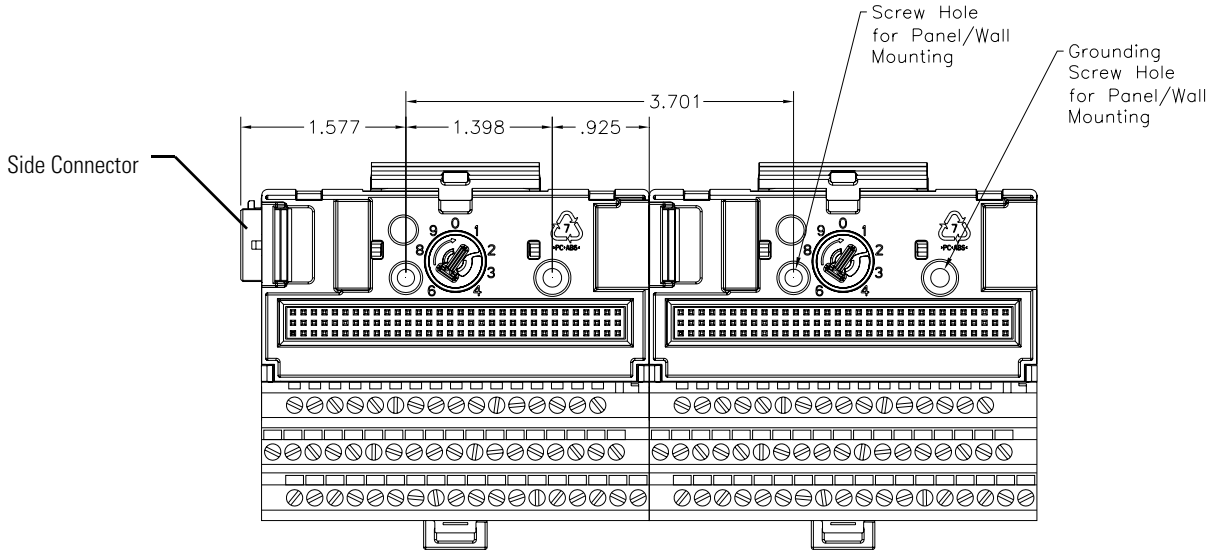

2. Drill the necessary holes for the #6 self-tapping mounting screws.

3. Retract the side connector into the base unit. Make sure it is **fully retracted**.

4. Position the terminal base unit up tight against the neighboring terminal base. Make sure the hook on the terminal base slides under the edge of the terminal base unit.

5. Gently push the side connector into the side of the neighboring terminal base to complete the backplane connection.

6. Secure the terminal base to the wall with two #6 self-tapping screws.

7. Repeat the above steps to install another Expansion Relay terminal base unit. Up to two Expansion Relay modules can be added to each XM-440 Master Relay module.

Connecting Wiring for Your Module

Wiring to the module is made through the terminal base unit on which the module mounts. The XM-441 is compatible only with the XM-943 terminal base unit, Cat. No. 1440-TB-D.

Figure 2.5 XM-942 Terminal Base Unit

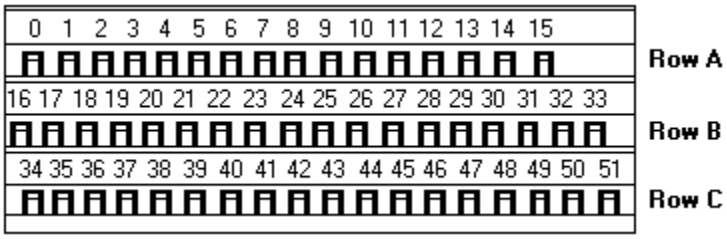

XM-943, Cat. No. 1440-TB-D

Terminal Block Assignments

The terminal block assignments and descriptions for the XM-441 module are shown below.

ATTENTION

The terminal block assignments are different for different XM modules. The following table applies only to the XM-441. Refer to the installation instructions for the specific XM module for its terminal assignments.

WARNING

EXPLOSION HAZARD

Do not disconnect equipment unless power has been removed or the area is known to be nonhazardous.

Do not disconnect connections to this equipment unless power has been removed or the area is known to be nonhazardous. Secure any external connections that mate to this equipment by using screws, sliding latches, threaded connectors, or other means provided with this product.

Terminal Assignments

No.	Name	Description
0	No Connection	
1	No Connection	
2	No Connection	
3	Reserved	
4	Relay 1 N.O. 2	Relay #1 Normally Open contact 2
5	Relay 1 N.O. 1	Relay #1 Normally Open contact 1
6	Relay 2 N.O. 2	Relay # 2 Normally Open contact 2
7	No Connection	

Terminal Assignments

No.	Name	Description
8	Relay 2 N.O. 1	Relay # 2 Normally Open contact 1
9	Relay 3 N.O. 2	Relay #3 Normally Open contact 2
10	No Connection	
11	Relay 3 N.O. 1	Relay #3 Normally Open contact 1
12	Relay 4 N.O. 2	Relay #4 Normally Open contact 2
13	Relay 4 N.O. 1	Relay #4 Normally Open contact 1
14	No Connection	
15	Chassis	Connection to DIN rail ground spring or panel mounting hole
16	No Connection	
17	No Connection	
18	No Connection	
19	No Connection	
20	Relay 1 Common 2	Relay #1 Common contact 2
21	Relay 1 Common 1	Relay #1 Common contact 1
22	Relay 2 Common 2	Relay #2 Common contact 2
23	No Connection	
24	Relay 2 Common 1	Relay #2 Common contact 1
25	Relay 3 Common 2	Relay #3 Common contact 2
26	No Connection	
27	Relay 3 Common 1	Relay #3 Common contact 1
28	Relay 4 Common 2	Relay #4 Common contact 2
29	Relay 4 Common 1	Relay #4 Common contact 1
30	No Connection	
31	Chassis	Connection to DIN rail ground spring or panel mounting hole
32	DNet V (+)[1]	DeviceNet bus power input, positive side (red wire)
33	CAN_High[1]	DeviceNet bus connection, high differential (white wire)
34	No Connection	
35	No Connection	
36	No Connection	
37	No Connection	
38	Relay 1 N.C. 2	Relay #1 Normally Closed contact 2
39	Relay 1 N.C. 1	Relay #1 Normally Closed contact 1
40	Relay 2 N.C. 2	Relay #2 Normally Closed contact 2
41	No Connection	
42	Relay 2 N.C. 1	Relay #2 Normally Closed contact 1

Terminal Assignments

No.	Name	Description
43	Relay 3 N.C. 2	Relay #3 Normally Closed contact 2
44	No Connection	
45	Relay 3 N.C. 1	Relay #3 Normally Closed contact 1
46	Relay 4 N.C. 2	Relay #4 Normally Closed contact 2
47	Relay 4 N.C. 1	Relay #4 Normally Closed contact 1
48	No Connection	
49	Chassis	Connection to DIN rail ground spring or panel mounting hole
50	DNet V (-)[1]	DeviceNet bus power input, negative side (black wire)
51	CAN_Low[1]	DeviceNet bus connection, low differential (blue wire)

1 DeviceNet communication is not used by the XM-943 but DeviceNet connections are available on the terminal base unit and the side connector.

Power Supply

The host XM module provides power, via the side connector, for the XM-441 module.

Connecting the Relays

The XM-441 has both Normally Open (NO) and Normally Closed (NC) relay contacts. Normally Open relay contacts close when the control output is energized. Normally Closed relay contacts open when the control output is energized.

The alarms associated with the relay and whether the relay is normally de-energized (non-failsafe) or normally energized (failsafe) depends on the configuration of the module. Refer to the User Guide for the specific module for a description of the Relay parameters.

There are four double pole double throw relays in the XM-441. All relay contacts (24 total) are available for wiring at the terminal base unit, as shown in Table 2.1 on the page 23.

IMPORTANT All XM relays are double pole. This means that each relay has two contacts in which each contact operates independently but identically. The following information and illustrations show wiring solutions for both contacts; although, in many applications it may be necessary to wire only one contact.

IMPORTANT The NC/NO terminal descriptions (pages 20–22) correspond to a de-energized (unpowered) relay.

When the relay is configured for non-failsafe operation, the relay is normally de-energized.

When the relay is configured for failsafe operation, the relay is normally energized, and the behavior of the NC and NO terminals is inverted.

Table 2.1 Relay Connections for XM-441

Configured for Failsafe Operation			Relay 1 Terminals		Relay 2 Terminals		Relay 3 Terminals		Relay 4 Terminals	
Nonalarm	**Alarm**	**Wire Contacts**	**Contact 1**	**Contact 2**	**Contact 1**	**Contact 2**	**Contact 1**	**Contact 2**	**Contact 1**	**Contact 2**
Closed	Opened	COM	21	20	24	22	27	25	29	28
		NO	5	4	8	6	11	9	13	12
Opened	Closed	COM	21	20	24	22	27	25	29	28
		NC	39	38	42	40	45	43	47	46

Configured for Non-failsafe Operation			Relay 1 Terminals		Relay 2 Terminals		Relay 3 Terminals		Relay 4 Terminals	
Nonalarm	**Alarm**	**Wire Contacts**	**Contact 1**	**Contact 2**	**Contact 1**	**Contact 2**	**Contact 1**	**Contact 2**	**Contact 1**	**Contact 2**
Closed	Opened	COM	21	20	24	22	27	25	29	28
		NC	39	38	42	40	45	43	47	46
Opened	Closed	COM	21	20	24	22	27	25	29	28
		NO	5	4	8	6	11	9	13	12

Figures 2.6 and 2.7 illustrate the behavior of the NC and NO terminals when the relay is wired for failsafe, alarm or nonalarm condition or non-failsafe, alarm or nonalarm condition.

Figure 2.6 Relay Connection - Failsafe, Nonalarm Condition
Non-failsafe, Alarm Condition

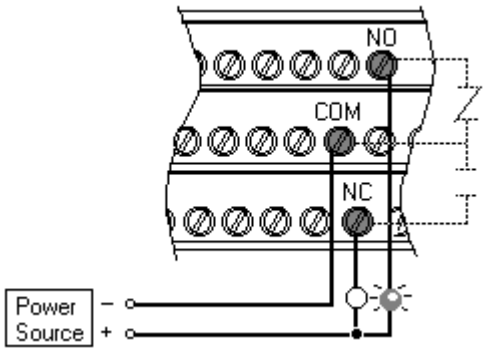

Figure 2.7 Relay Connection - Failsafe Alarm Condition
Non-failsafe, Nonalarm Condition

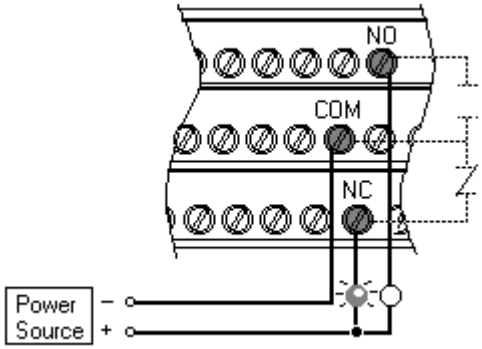

Alternate Relay Wiring

Figures 2.8 and 2.9 show how to wire both ends of a single external indicator to the XM terminal base for failsafe, nonalarm or alarm condition or non-failsafe, nonalarm or alarm condition.

Figure 2.8 Relay Connection - Failsafe, Nonalarm Condition
Non-failsafe, Alarm Condition

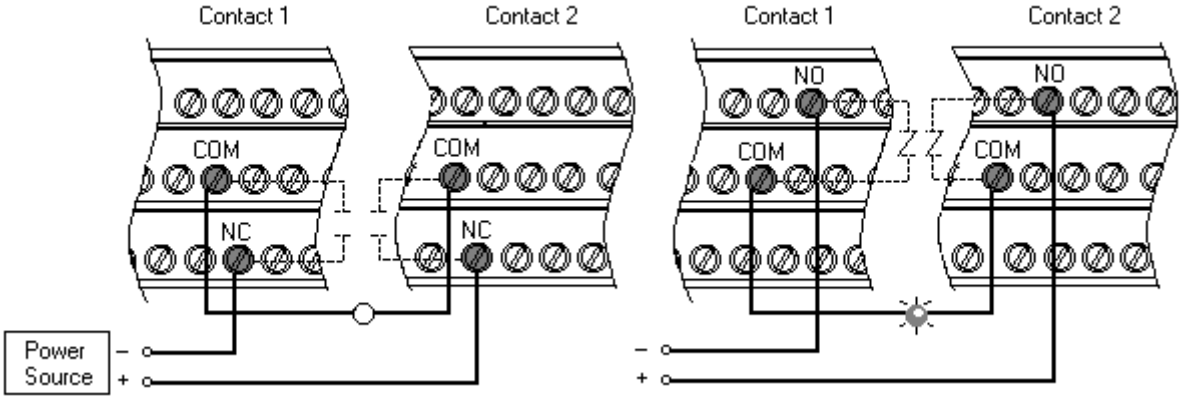

Figure 2.9 Relay Connection - Failsafe, Alarm Condition
Non-failsafe, Alarm Condition

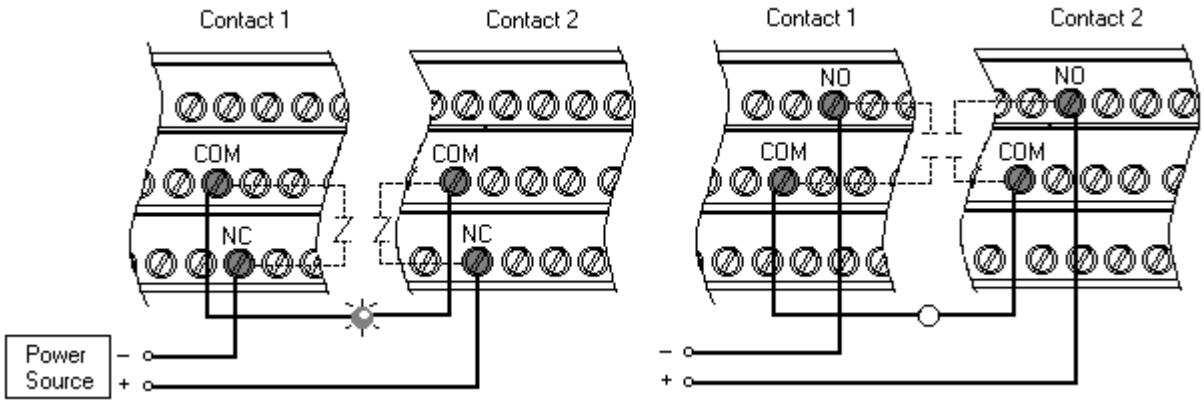

Mounting the Module

The XM-441 mounts on the XM-943 terminal base unit, Cat. No. 1440-TB-D. You should mount the module after you have connected the wiring on the terminal base unit.

ATTENTION

The XM-441 is compatible only with the XM-943 terminal base unit. The keyswitch on the terminal base unit should be at position 3 for the XM-441.

Do not attempt to install XM-441 modules on other terminal base units.

Do not change the position of the keyswitch after wiring the terminal base.

ATTENTION

This module is designed so you can **remove and insert it under power**. However, when you remove or insert the module with power applied, I/O attached to the module can change states due to its input/output signal changing conditions. Take special care when using this feature.

WARNING

When you insert or remove the module while power is on, an electrical can occur. This could cause an explosion in hazardous location installations. Be sure that power is removed or the area is nonhazardous before proceeding.

1. Make certain the keyswitch (A) on the terminal base unit (C) is at position 3 as required for the XM-441.

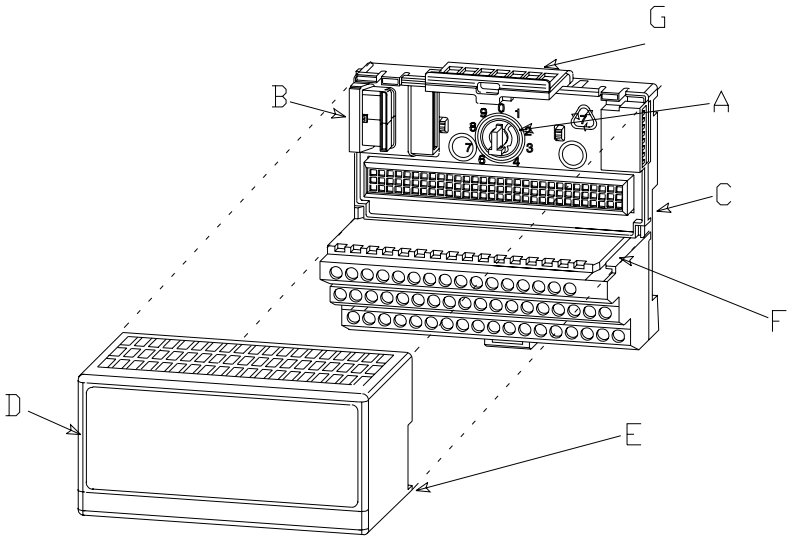

2. Make certain the side connector (B) is pushed all the way to the left. **You cannot install the module unless the connector is fully extended**.

3. Make sure that the pins on the bottom of the module are straight so they will align properly with the connector in the terminal base unit.

4. Position the module (D) with its alignment bar (E) aligned with the groove (F) on the terminal base.

5. Press firmly and evenly to seat the module in the terminal base unit. The module is seated when the latching mechanism (G) is locked into the module.

6. Repeat the above steps to install the next XM-441 module in its terminal base.

Module Indicators

The XM-441 has a power status indicator (PWR) that is on when power is applied to the module and an activation status indicator for each relay (four in all). The indicators are located on top of the module.

Figure 2.10 LED Indicators

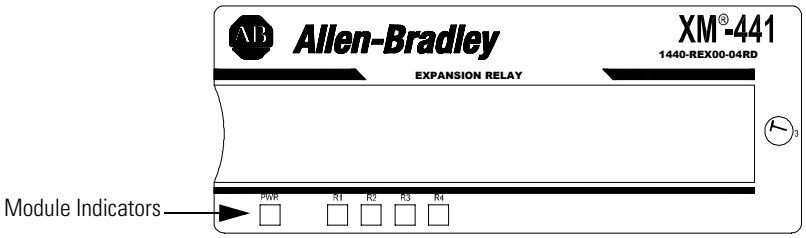

The following tables describe the states of the LED status indicators.

Power Status Indicator

Color	State	Description
No color	Off	No power applied to the module.
Green	Solid	Power applied to the module.

Relay Indicators (4 in all)

Color	State	Description
Red	Off	On-board relay is not activated.
	Solid	On-board relay is activated.

Specifications

The Appendix lists the technical specifications for the XM-441 module.

XM-441 Technical Specifications

Product Feature	Specification
Communications	Communication interface is via the side connector between the XM-441 and the XM module mounted directly to the **left** of the XM-441.
Side Connector	All XM measurement and relay modules include side connectors that allow interconnecting adjacent modules, thereby simplifying the external wiring requirements. The interconnect provides primary power, DeviceNet communication, and the circuits necessary to support expansion modules, such as the XM-441 Expansion Relay module. *NOTE: DeviceNet protocol, which is not used by the XM-441, and primary power are passed through the module's terminal base to modules connected on either side of the XM-441.*
Indicators	
5 LEDs	Module Power -green Relay 1 - red Relay 2 - red Relay 3 - red Relay 4 - red
Relays	
Number	Four relays, two sets of contacts each - DPDT (2 Form C)
Contacts	250V AC, 50/60 Hz, 3 A Resistive
Failsafe	Normally energized (failsafe), or Normally de-energized (non-failsafe)
These features are managed/controlled by the host XM module. Refer to the applicable XM module's specification for details on these features:	Latching Time Delay Voting Logic Reset Activation

XM-441 Technical Specifications

Product Feature	Specification
Power	
Module	24V DC
Consumption	120mA maximum
Heat Production	2.9 Watts (9.9 BTU/hr) maximum
Environmental	
Operating Temperature	-20 to +65°C (-4 to +149°F)
Storage Temperature	-40 to +85°C (-40 to +185°F)
Relative Humidity	95% non-condensing
	All printed circuit boards are conformally coated in accordance with IPC-A-610C,
Physical	
Dimensions	Height: 3.8in (97mm) Width: 3.7in (94mm) Depth: 3.7in (94mm)
Terminal Screw Torque	7 pound-inches (0.6Nm)
Approvals (when product or packaging is marked)	UL — UL Listed for Ordinary Locations UL — UL Listed for Class I, Division 2 Group A, B, C, and D Hazardous Locations CSA — CSA Certified Process Control Equipment CSA — CSA Certified Process Control Equipment for Class I, Division 2 Group A, B, C, and D Hazardous Locations EEX* — European Union 94/9/EEC ATEX Directive, compliant with EN 50021; Potentially Explosive Atmospheres, Protection “n” CE* — European Union 89/336/EEC EMC Directive C-Tick* — Australian Radiocommunications Act, compliant with: AS/NZS 2064, Industrial Emissions * *See the Product Certification link at www.rockwellautomation.com for Declarations of Conformity, Certificates and other certification details.*

alarm

An alarm alerts you to a change in a measurement. For example, an alarm can notify you when the measured vibration level for a machine exceeds a pre-defined value.

Automatic Device Replacement (ADR)

A means for replacing a malfunctioning device with a new unit, and having the device configuration data set automatically. The ADR scanner uploads and stores a device's configuration. Upon replacing a malfunctioning device with a new unit (MAC ID 63), the ADR scanner automatically downloads the configuration data and sets the MAC ID (node address).

baud rate

The baud rate is the speed at which data is transferred on the DeviceNet network. The available data rates depend on the type of cable and total cable length used on the network:

	Maximum Cable Length		
Cable	**125K**	**250K**	**500K**
Thick Trunk Line	500m (1,640ft.)	250m (820ft.)	100m (328ft.)
Thin Trunk Line	100m (328ft.)	100m (328ft.)	100m (328ft.)
Maximum Drop Length	6m (20ft.)	6m (20ft.)	6m (20ft.)
Cumulative Drop Length	156m (512ft.)	78m (256ft.)	39m (128ft.)

The XM measurement modules' baud rate is automatically set by the bus master. You must set the XM-440 Relay module baud rate. You set the XM-440 Relay Master to 125kb, 250kb, 500kb, or Autobaud if another device on the network has set the baud rate.

bus off

A bus off condition occurs when an abnormal rate of errors is detected on the Control Area Network (CAN) bus in a device. The bus-off device cannot receive or transmit messages on the network. This condition is often caused by corruption of the network data signals due to noise or baud rate mismatch.

Change of State (COS)

DeviceNet communications method in which the XM module sends data based on detection of any changed value within the input data (alarm or relay status).

current configuration

The current configuration is the most recently loaded set of configuration parameters in the XM module's memory. When power is cycled, the current configuration is loaded with either the saved configuration (in EEPROM) or the factory defaults (if there is no saved configuration). In addition, the current configuration contains any configuration changes that have been downloaded to the module since power was applied.

DeviceNet network

A DeviceNet network uses a producer/consumer Controller Area Network (CAN) to connect devices (for example, XM modules). A DeviceNet network can support a maximum of 64 devices. Each device is assigned a unique node address (MAC ID) and transmits data on the network at the same baud rate.

A cable is used to connect devices on the network. It contains both the signal and power wires. General information about DeviceNet and the DeviceNet specification are maintained by the Open DeviceNet Vendor's Association (ODVA). ODVA is online at http://www.odva.org.

EEPROM

See **NVS (Non-Volatile Storage).**

Electronic Data Sheet (EDS) Files

EDS files are simple text files that are used by network configuration tools such as RSNetWorx for DeviceNet to describe products so that you can easily commission them on a network. EDS files describe a product device type, revision, and configurable parameters.

Help window

A **window** that contains help topics that describe the operation of a program. These topics may include:

- An explanation of a command.
- A description of the controls in a dialog box or property page.
- Instructions for a task.
- Definition of a term.

MAC ID

See node address.

master device

A device which controls one or more slave devices. The XM-440 Master Relay module is a master device.

node address

A DeviceNet network can have as many as 64 devices connected to it. Each device on the network must have a unique node address between 0 and 63. Node address 63 is the default used by uncommissioned devices. Node address is sometimes called "MAC ID."

NVS (Non-Volatile Storage)

NVS is the permanent memory of an XM module. Modules store parameters and other information in NVS so that they are not lost when the module loses power (unless Auto Save is disabled). NVS is sometimes called "EEPROM."

online help

Online help allows you to get help for your program on the computer screen by pressing **F1.** The help that appears in the Help window is context sensitive, which means that the help is related to what you are currently doing in the program.

Polled

DeviceNet communications method in which the module sends data in response to a poll request from a master device.

slave device

A device that receives and responds to messages from a Master device but does not initiate communication. Slave devices include the XM measurement modules, such as the XM-120 Dynamic Measurement module and the XM-320 Position module.

virtual relay

A virtual relay is a non-physical relay. It has the same capabilities (monitor alarms, activation delay, change status) as a physical relay only without any physical or electrical output. The virtual relay provides additional relay status inputs to a controller, PLC, and an XM440 Master Relay module (firmware revision 5.0 and later).

XM configuration

XM configuration is a collection of user-defined parameters for XM modules.

XM Serial Configuration Utility Software

XM Serial Configuration Utility software is a tool for monitoring and configuring XM modules. It can be run on computers running Windows 2000 service pack 2, Windows NT service pack 6, or Windows XP operating systems.

Rockwell Automation Support

Rockwell Automation provides technical information on the Web to assist you in using its products.
At http://www.rockwellautomation.com/support/, you can find technical manuals, a knowledge base of FAQs, technical and application notes, sample code and links to software service packs, and a MySupport feature that you can customize to make the best use of these tools.

For an additional level of technical phone support for installation, configuration, and troubleshooting, we offer TechConnect support programs. For more information, contact your local distributor or Rockwell Automation representative, or visit http://www.rockwellautomation.com/support/.

Installation Assistance

If you experience a problem within the first 24 hours of installation, review the information that is contained in this manual. You can contact Customer Support for initial help in getting your product up and running.

United States or Canada	1.440.646.3434
Outside United States or Canada	Use the Worldwide Locator at http://www.rockwellautomation.com/support/americas/phone_en.html, or contact your local Rockwell Automation representative.

New Product Satisfaction Return

Rockwell Automation tests all of its products to ensure that they are fully operational when shipped from the manufacturing facility. However, if your product is not functioning and needs to be returned, follow these procedures.

United States	Contact your distributor. You must provide a Customer Support case number (call the phone number above to obtain one) to your distributor to complete the return process.
Outside United States	Please contact your local Rockwell Automation representative for the return procedure.

Documentation Feedback

Your comments will help us serve your documentation needs better. If you have any suggestions on how to improve this document, complete this form, publication RA-DU002, available at http://www.rockwellautomation.com/literature/.

Rockwell Otomasyon Ticaret A.Ş., Kar Plaza İş Merkezi E Blok Kat:6 34752 İçerenköy, İstanbul, Tel: +90 (216) 5698400

www.rockwellautomation.com

Power, Control and Information Solutions Headquarters

Americas: Rockwell Automation, 1201 South Second Street, Milwaukee, WI 53204-2496 USA, Tel: (1) 414.382.2000, Fax: (1) 414.382.4444
Europe/Middle East/Africa: Rockwell Automation NV, Pegasus Park, De Kleetlaan 12a, 1831 Diegem, Belgium, Tel: (32) 2 663 0600, Fax: (32) 2 663 0640
Asia Pacific: Rockwell Automation, Level 14, Core F, Cyberport 3, 100 Cyberport Road, Hong Kong, Tel: (852) 2887 4788, Fax: (852) 2508 1846

Rockwell Automation Publication GMSI10-UM019C-EN-P - June 2011
Supersedes Publication GMSI10-UM019B-EN-P - May 2010