Profibus DPV1 Option Module

Catalog Number 20-750-PBUS

Allen-Bradley
by ROCKWELL AUTOMATION

User Manual

Original Instructions

Important User Information

Read this document and the documents listed in the additional resources section about installation, configuration, and operation of this equipment before you install, configure, operate, or maintain this product. Users are required to familiarize themselves with installation and wiring instructions in addition to requirements of all applicable codes, laws, and standards.

Activities including installation, adjustments, putting into service, use, assembly, disassembly, and maintenance are required to be carried out by suitably trained personnel in accordance with applicable code of practice.

If this equipment is used in a manner not specified by the manufacturer, the protection provided by the equipment may be impaired.

In no event will Rockwell Automation, Inc. be responsible or liable for indirect or consequential damages resulting from the use or application of this equipment.

The examples and diagrams in this manual are included solely for illustrative purposes. Because of the many variables and requirements associated with any particular installation, Rockwell Automation, Inc. cannot assume responsibility or liability for actual use based on the examples and diagrams.

No patent liability is assumed by Rockwell Automation, Inc. with respect to use of information, circuits, equipment, or software described in this manual.

Reproduction of the contents of this manual, in whole or in part, without written permission of Rockwell Automation, Inc., is prohibited.

Throughout this manual, when necessary, we use notes to make you aware of safety considerations.

WARNING: Identifies information about practices or circumstances that can cause an explosion in a hazardous environment, which may lead to personal injury or death, property damage, or economic loss.

ATTENTION: Identifies information about practices or circumstances that can lead to personal injury or death, property damage, or economic loss. Attentions help you identify a hazard, avoid a hazard, and recognize the consequence.

IMPORTANT Identifies information that is critical for successful application and understanding of the product.

Labels may also be on or inside the equipment to provide specific precautions.

SHOCK HAZARD: Labels may be on or inside the equipment, for example, a drive or motor, to alert people that dangerous voltage may be present.

BURN HAZARD: Labels may be on or inside the equipment, for example, a drive or motor, to alert people that surfaces may reach dangerous temperatures.

ARC FLASH HAZARD: Labels may be on or inside the equipment, for example, a motor control center, to alert people to potential Arc Flash. Arc Flash will cause severe injury or death. Wear proper Personal Protective Equipment (PPE). Follow ALL Regulatory requirements for safe work practices and for Personal Protective Equipment (PPE).

Preface

About This Publication 7
Download Firmware, AOP, EDS, and Other Files 7
Summary of Changes. 7
DriveExplorer and DriveExecutive Software 7
DriveExplorer Software (version 6.01 or later) 7
DriveExecutive Software (version 5.06 or later) 8
Conventions Used in This Manual 8
Additional Resources 8

Chapter 1

Getting Started

Components. 11
Features. 12
Understanding Parameter Types 12
Compatible Products 13
Required Equipment 13
Equipment Shipped with the Option Module 13
User-Supplied Equipment 13
Safety Precautions 14
Quick Start 15

Chapter 2

Installing the Option Module

Preparing for an Installation 17
Setting the Endianness and Node Address Switches 17
Connecting the Option Module to the PowerFlex 750-Series Product . 19
Connecting the Option Module to the Network 20
Network Termination 22
Applying Power 22
Startup Status Indications. 22
Configuring and Verifying Key Parameters 24

Chapter 3

Configuring the Option Module

Configuration Tools 27
Using the PowerFlex 20-HIM-A6 or 20-HIM-C6S HIM to Access Parameters 28
Setting the Node Address 28
Setting a Leader-Follower Hierarchy (Optional) 28
Enable Datalinks To Write Data. 28
Enable Datalinks To Read Data 30
Setting a Fault Action. 30
Changing the Fault Action 31
Setting the Fault Configuration Parameters 31
Resetting the Option Module. 32

Restoring Option Module Parameters to Factory Defaults 33
Viewing the Option Module Status Using Parameters 34
Updating the Option Module Firmware 34
Configure the Option Module on Your PROFIBUS Network 34

Chapter 4

Using the I/O

About I/O Messaging 37
Understanding the I/O Image 38
Using Logic Command/Status 38
Using Reference/Feedback 39
Using Datalinks 39

Chapter 5

Acyclic Messaging

About Acyclic Messaging 41
Examples 43
Acyclic Messaging for DPV1 Class 1 45
Example Messaging 45
Read Example for Drive Parameter 1 - [Output Frequency] 45
Write Example for Drive Parameter 520 [Max Fwd Speed] 47

Chapter 6

Troubleshooting

Understanding the Status Indicators 49
PORT Status Indicator 50
MOD Status Indicator 50
NET A Status Indicator 50
Viewing Option Module Diagnostic Items 51
Viewing and Clearing Events 52

Appendix A

Specifications

Communications 55
Electrical 55
Mechanical 55
Environmental 56
Regulatory Compliance 56

Appendix B

Option Module Parameters

Parameter Types 57
About Parameter Numbers 57
How Parameters Are Organized 58
Device Parameters 58
Host Parameters 60

Appendix C

Logic Command/Status Words: PowerFlex 750-Series Products

Drive Products 63
Logic Command Word 63
Logic Status Word 64
Bus Supply Products 66

Logic Command Word 66
Logic Status Word 66

Appendix D

History of Changes

750COM-UM004B-EN-P, September 2012 69

About This Publication

This manual provides information about the 20-750-PBUS PROFIBUS DPV1 option module for network communications option and how to use the module with PowerFlex® 750-Series drives and PowerFlex 755T drive products.

Download Firmware, AOP, EDS, and Other Files

Download firmware, associated files (such as AOP, EDS, and DTM), and access product release notes from the Product Compatibility and Download Center at rok.auto/pcdc.

Summary of Changes

This publication contains the following new or updated information. This list includes substantive updates only and is not intended to reflect all changes.

Topic	Page
Added information about compatibility with PowerFlex® 755TL drives, PowerFlex 755TR drives, and PowerFlex 755TM drive systems	throughout
Modified instructions regarding PROFIBUS network configuration and removed references to specific PROFIBUS configuration tools	throughout

DriveExplorer and DriveExecutive Software

Connected Components Workbench™ software and the Studio 5000 Logix Designer® application are the recommended tools for configuring the 20-750-PBUS PROFIBUS DPV1 option module. Although DriveExecutive™ and DriveExplorer™ software can still be used, this manual provides specific instructions for the recommended tools only. Additional information about DriveExplorer and DriveExecutive software is provided in the following sections.

DriveExplorer Software (version 6.01 or later)

DriveExplorer software, version 6.01 or later is discontinued and available only as freeware at rok.auto/pcdc. No future updates to the tool are planned. The download is provided 'as is' for users who have lost their DriveExplorer CD or need to configure legacy products not supported by Connected Components Workbench software. DriveExplorer is not compatible with PowerFlex 755TL drives, PowerFlex 755TR drives, and PowerFlex 755TM systems.

DriveExecutive Software (version 5.06 or later)

A Lite version of DriveExecutive software shipped with RSLogix 5000®, RSNetWorx™ MD, FactoryTalk® AssetCentre, and IntelliCENTER® software. All other versions are purchasable items:

- 9303-4DTE01ENE Drive Executive software
- 9303-4DTS01ENE DriveTools™ SP Suite (includes DriveExecutive and DriveObserver™ software)
- 9303-4DTE2S01ENE DriveExecutive software upgrade to DriveTools SP Suite (adds DriveObserver software)

DriveExecutive software updates can be obtained at rok.auto/pcdc. It is highly recommended that you periodically check for and install the latest update.

Conventions Used in This Manual

The following conventions are used throughout this manual:

- Parameter names are shown in the format *Device* **Parameter xx [*] or** *Host* **Parameter xx [*]**. The xx represents the parameter number. The * represents the parameter name—for example *Device* **Parameter 01 [DPI Port]**.
- The firmware revision number (FRN) is displayed as FRN *X.xxx*, where '*X*' is the major revision number and '*xxx*' is the minor revision number.
- For the screen displays in this manual, the following software was used:
  - Connected Components Workbench, release 12.00
  - Studio 5000 Logix Designer application, version 31.00.00

Different versions of the software may differ in appearance and procedures.

Additional Resources

These documents contain additional information concerning related products from Rockwell Automation and others.

Resource	Description
Industrial Automation Wiring and Grounding Guidelines, publication 1770-4.1	Provides general guidelines for installing a Rockwell Automation industrial system.
Network Communication Option Module Installation Instructions, publication 750COM-IN002	Information on the installation of PowerFlex 750-Series Network Communication modules
PROFINET Installation Guideline for Cabling and Assembly website http://www.profinet.com/	Information about PROFINET Cables.
PROFINET Standard http://www.profinet.com/	Information about PROFINET technology, networks, and products.
Connected Components Workbench website and online help http://rok.auto/ccw	Information on the Connected Components Workbench software tool—and includes a link for free software download.
PowerFlex 750-Series Drive Installation Instructions, publication 750-IN001	Provides detailed information on how to install PowerFlex 750-Series AC drives.
PowerFlex 750-Series AC Drives Programming Manual, publication 750-PM001	Provides detailed information on I/O, control, and feedback options; parameters and programming; faults, alarms, and troubleshooting.
PowerFlex 20-HIM-A6 and 20-HIM-C6S HIM (Human Interface Module) User Manual, publication 20HIM-UM001	Provides detailed information on HIM components, operation, and features.
PowerFlex 750-Series AC Drives Technical Data, publication 750-TD001	Provides technical data about PowerFlex 750-Series Drives
PowerFlex 750-Series Products with TotalFORCE® Control Technical Data, publication 750-TD100	Provides detailed technical data, specifications, ratings, fuse/circuit breaker sizing and option information for IP20/IP54 enclosed PowerFlex 755T products.
PowerFlex 750-Series Products with TotalFORCE Control Installation Instructions, publication 750-IN100	Provides procedures for the handling, installation, and electrical wiring of IP20/IP54 enclosed PowerFlex 755T products.
PowerFlex 755TM IP00 Open Type Kits Technical Data, publication 750-TD101	Provides detailed technical data, specifications, ratings, fuse/circuit breaker sizing and option information for IP00 open type PowerFlex 755T drive system products.

Resource	Description
PowerFlex 755TM IP00 Open Type Kits Installation Instructions, publication 750-IN101	Provides procedures for the handling, installation, and electrical wiring of IP00 open type PowerFlex 755T drive system products.
PowerFlex Drives with TotalFORCE Control Programming Manual, publication 750-PM100	Provides detailed parameter descriptions, configuration settings, and fault/alarm troubleshooting.
PowerFlex 750-Series Products with TotalFORCE Control Hardware Service Manual, publication 750-TG100	Provides detailed troubleshooting, maintenance, component testing, and hardware service instructions for PowerFlex 750T drives and bus supplies.
Product Certifications website, rok.auto/certifications	Provides declarations of conformity, certificates, and other certification details.
EtherNet/IP Network Devices User Manual, ENET-UM006	Describes how to configure and use EtherNet/IP™ devices to communicate on the EtherNet/IP network.
Ethernet Reference Manual, ENET-RM002	Describes basic Ethernet concepts, infrastructure components, and infrastructure features.
System Security Design Guidelines Reference Manual, SECURE-RM001	Provides guidance on how to conduct security assessments, implement Rockwell Automation products in a secure system, harden the control system, manage user access, and dispose of equipment.
Industrial Components Preventive Maintenance, Enclosures, and Contact Ratings Specifications, publication IC-TD002	Provides a quick reference tool for Allen-Bradley industrial automation controls and assemblies.
Safety Guidelines for the Application, Installation, and Maintenance of Solid-state Control, publication SGI-1.1	Designed to harmonize with NEMA Standards Publication No. ICS 1.1-1987 and provides general guidelines for the application, installation, and maintenance of solid-state control in the form of individual devices or packaged assemblies incorporating solid-state components.

You can view or download publications at rok.auto/literature.

Notes:

Getting Started

The 20-750-PBUS option module is intended for installation into PowerFlex 750-Series drives and PowerFlex 755T drive products and is used for network communication. In this manual, the term PowerFlex 750-Series product is used to describe the following Architecture Class AC drives, bus supplies, and common bus inverters:

- PowerFlex 753 drives
- PowerFlex 755 drives
- PowerFlex 755TL drives
- PowerFlex 755TR drives
- PowerFlex 755TM drive systems

Topic	Page
Components	11
Features	12
Understanding Parameter Types	12
Compatible Products	13
Required Equipment	13
Safety Precautions	14
Quick Start	15

Components

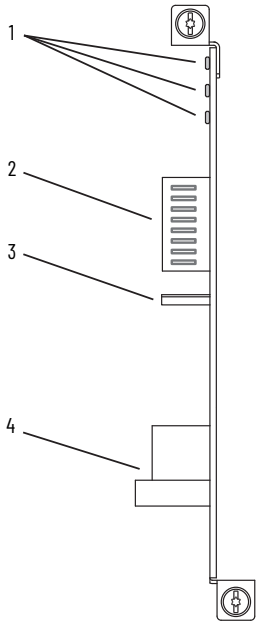

Item	Part	Description
1	Status Indicators	Three status indicators that indicate the status of the option module and network communication. See Chapter 7, Troubleshooting.
2	Node Address Switches (Switches 1...7)	Sets the node address of the option module. See Setting the Endianness and Node Address Switches on page 20.
	Endianness Selection Switch (Switch 8)	Sets the endianness of data transmitted over network.
3	Selection Jumper	Selects between PROFIBUS or Profidrive operation mode. **Important:** This feature is not supported in this version, so changing the jumper position will not have any effect. The PROFIBUS operating mode is selected with either position.
4	PROFIBUS DB9 Female Connector	PROFIBUS connector for the PROFIBUS network cable.

Features

The features of the option module include the following:

- Captive screws to secure and ground the option module to the PowerFlex 750-Series product.
- Switches to set a node address before applying power to the drive—or you can disable the switches and use an option module parameter to configure the node address.
- Compatibility with various configuration tools to configure the option module and host product, including the following tools:
  - PowerFlex 20-HIM-A6 or 20-HIM-C6S HIM (Human Interface Module) on the product, if available
  - Connected Components Workbench software
    Connected Components Workbench is the recommended standalone software tool for use with PowerFlex 750-Series products. You can obtain a free copy at: http://rok.auto/ccw
  - Third-party PROFIBUS configuration software, such as ProSoft Configuration Builder
- Status indicators that report the status of the option module and network communication. They are visible when the product cover is open or removed.
- Parameter-configured 32-bit Datalinks in the I/O to meet application requirements (16 Datalinks to write data from the network to the drive, and 16 Datalinks to read data to the network from the product).
- Acyclic Messaging support.
- Leader-follower hierarchy that can be set up so that the option module and product transmit data to and from a leader on the network.
- User-defined fault actions to determine how the option module and connected product respond to the following:
  - I/O messaging communication disruptions (Comm Flt Action)
  - Controllers in Idle mode (Idle Flt Action)
  - Acyclic messaging

Understanding Parameter Types

The option module has two types of parameters:

- *Device* parameters are used to configure the option module to operate on the network.
- *Host* parameters are used to configure the option module Datalink transfer and various fault actions with the PowerFlex 750-Series product.

You can view option module *Device* parameters and *Host* parameters with any of the following configuration tools:

- PowerFlex 20-HIM-A6 or 20-HIM-C6S HIM—use the 4 ◄ or ► 6 key to scroll to the port in which the module resides, press the (Folders) key, and use the 4 ◄ or ► 6 key to scroll to the DEV PARAM or HOST PARAM folder.
- Connected Components Workbench software—click the tab for the option module at the bottom of the window, click the Parameters icon in the toolbar, and click the *Device* or *Host* Parameters tab.

Compatible Products

At the time of publication, the option module is compatible with the following:

- PowerFlex 753 drives (all firmware revisions)
- PowerFlex 755 drives (all firmware revisions)
- PowerFlex 755T products (firmware revision 6.001 and later)

Required Equipment

Some of the equipment that is required for use with the option module is shipped with the module, but some you must provide yourself.

Equipment Shipped with the Option Module

When you unpack the option module, verify that the package includes the following:

- One 20-750-PBUS PROFIBUS option module
- One Network Communication Option Card Installation Instructions, publication 750COM-IN002

User-Supplied Equipment

To install and configure the option module, you must supply the following:

- A small screwdriver
- PROFIBUS cable; only use cable that conforms to PROFIBUS cable standards (Belden #3079A PROFIBUS cable or equivalent is recommended)
- One 9-pin, male D-Sub PROFIBUS connector

  PROFIBUS connectors are available from a variety of sources and in various sizes. As such, there may be mechanical limitations that prohibit the use of some connectors. Phoenix SUBCON-PLUS-PROFIB/AX/SC (Part # 2744380), Siemens 6GK1500-0FC00, or Brad BM5G60PP4Mxxx are recommended for use with PowerFlex 750 series drives.
- Configuration tool, such as the following:
  - PowerFlex 20-HIM-A6 or 20-HIM-C6S HIM
  - Connected Components Workbench is the recommended standalone software tool for use with PowerFlex-750 Series products. See http://rok.auto/ccw for more information and to download a free version.
- A computer connection to the PROFIBUS DPV1 network

Safety Precautions

Please read the following safety precautions carefully.

WARNING: Risk of injury or death exists. The PowerFlex drive may contain high voltages that can cause injury or death. Remove all power from the PowerFlex drive, and then verify power has been discharged before installing or removing the option module.

WARNING: Risk of injury or equipment damage exists. Only personnel familiar with drive and power products and the associated machinery should plan or implement the installation, startup, configuration, and subsequent maintenance of the drive using the option module. Failure to comply may result in injury and/or equipment damage.

WARNING: Risk of equipment damage exists. The option module contains electrostatic discharge (ESD) sensitive parts that can be damaged if you do not follow ESD control procedures. Static control precautions are required when handling the option module. If you are unfamiliar with static control procedures, see *Guarding Against Electrostatic Damage*, publication 8000-4.5.2.

WARNING: Risk of injury or equipment damage exists. If the option module is transmitting control I/O to the drive, the drive may fault when you reset the option module. Determine how your drive will respond before resetting the module.

WARNING: Risk of injury or equipment damage exists. *Host* **Parameters 33 [Comm Flt Action] and 34 [Idle Flt Action]** let you determine the action of the option module and connected drive if I/O communication is disrupted, the controller is idle, or Acyclic messaging for drive control is disrupted. By default, these parameters fault the drive. You can set these parameters so that the drive continues to run, however, precautions should be taken to verify that the settings of these parameters do not create a risk of injury or equipment damage. When commissioning the drive, verify that your system responds correctly to various situations (for example, a disconnected cable or a controller in idle state).

WARNING: Risk of injury or equipment damage exists. When a system is configured for the first time, there may be unintended or incorrect machine motion. Disconnect the motor from the machine or process during initial system testing.

WARNING: Risk of injury or equipment damage exists. The examples in this publication are intended solely for purposes of example. There are many variables and requirements with any application. Rockwell Automation does not assume responsibility or liability (to include intellectual property liability) for actual use of the examples shown in this publication.

Quick Start

This section is provided to help experienced users quickly start using the Option Module. If you are unsure how to complete a step, refer to the referenced chapter.

	Action	
1	Review the safety precautions for the option module.	Throughout this manual
2	Verify that the PowerFlex 750-Series product is properly installed.	PowerFlex 750-Series AC Drive Installation Instructions, publication 750-IN001 PowerFlex 750-Series Products with TotalFORCE Control, publication 750-IN100
3	Install the option module. Verify that the PowerFlex 750-Series product is not powered. Insert the option module in Port 4, 5 or 6. Use the captive screws to secure and ground the option module to the product. Connect the option module to the network by using a PROFIBUS cable. **Important:** When another module (I/O, encoder, communication, and so forth) resides in the adjacent port to the **left** of the 20-750-PBUS option module—and the lower mounting screw of that module is a larger T15 Torx head screw, perform additional steps 2a through 2d on page 22.	Network Communication Option Card Installation Instructions, publication 750COM-IN002 and Chapter 2, Installing the Option Module
4	Apply power to the option module. The option module receives power from the PowerFlex 750-Series product. Verify that the option module is installed correctly and then apply power to the product. The status indicators should be green. If they flash red, there is a problem. See Chapter , Troubleshooting. Configure and verify key parameters.	Chapter 2, Installing the Option Module
5	Configure the option module for your application. Set option module parameters for the following functions as required by your application: Node address I/O configuration Leader - follower hierarchy Fault actions	Chapter 3, Configuring the Option Module
6	Configure the PROFIBUS controller to communicate with the option module. Use a controller configuration tool to configure the PROFIBUS controller on the PROFIBUS network to recognize the option module and product.	See the appropriate PROFIBUS documentation for your PROFIBUS controller.
7	Configure the I/O. Use a controller configuration tool such as RSLogix 5000 software that enables you to control the option module and connected product using I/O.	Chapter 5, Using the I/O

Notes:

Installing the Option Module

This chapter provides instructions for installing the option module in a PowerFlex 750-Series product.

Topic	Page
Preparing for an Installation	17
Setting the Endianness and Node Address Switches	17
Connecting the Option Module to the PowerFlex 750-Series Product	19
Connecting the Option Module to the Network	20
Network Termination	22
Applying Power	22

Preparing for an Installation

Before installing the option module, do the following:

- Read the PROFIBUS Installation Guideline for details on PROFIBUS networks.
- Verify that you have all required equipment.

ATTENTION: Risk of equipment damage exists. The option module contains electrostatic discharge (ESD) sensitive parts that can be damaged if you do not follow ESD control procedures. Static control precautions are required when handling the option module. If you are unfamiliar with static control procedures, see Guarding Against Electrostatic Damage, publication 8000-4.5.2.

Setting the Endianness and Node Address Switches

Set the Endianness of the option module with Byte Swap switch 8 (see Figure 1). The Byte Swap switch can be set to either open '0' (little-endian) or closed '1' (big-endian) data formats for the cyclic data exchanged on the network. The cyclic data consists of the following items:

- CTRL: Logic Command Word (4 bytes)
- REF: Speed Reference (4 bytes)
- STAT: Logic Status Word (4 bytes)
- FEEDBACK: Speed Feedback (4 bytes)
- 0...16 Datalinks (4 bytes each)

Depending on the setting of the Byte Swap switch 8, the 4 bytes for each of the preceding data items are swapped.

Figure 1 - Setting Option Module Node Address Switches

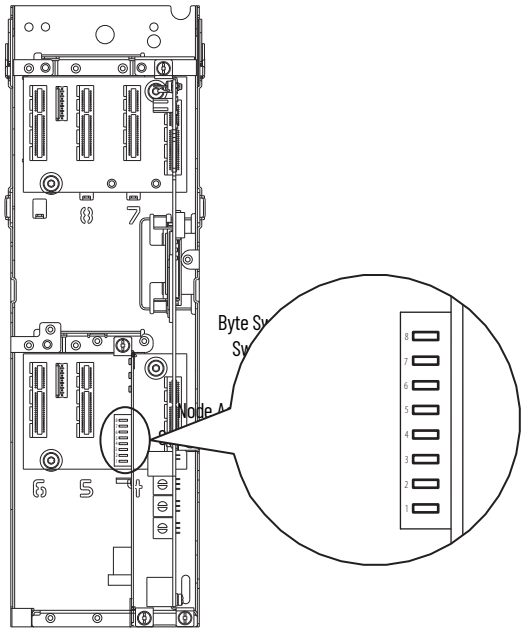

IMPORTANT Each node on the PROFIBUS network must have a unique address. Set the node address before power is applied because the option module detects the node address during initialization (Power On Reset). To change a node address, you must set the new value and then remove and reapply power to (or reset) the option module.

Set the Node Address by setting Node Address switches 1...7 to their binary equivalent, where '0' and '1' indicate switch positions 'Open' and 'Closed' respectively. Table 1 lists node addresses and the corresponding Node Address switch settings required to set that respective address.

Table 1 - Node Address Switch Settings

Node Address	Node Address Switch						
	7	6	5	4	3	2	1
00	0	0	0	0	0	0	0
01	0	0	0	0	0	0	1
02	0	0	0	0	0	1	0
03	0	0	0	0	0	1	1
04	0	0	0	0	1	0	0
05	0	0	0	0	1	0	1
06	0	0	0	0	1	1	0
07	0	0	0	0	1	1	1
08	0	0	0	1	0	0	0
09	0	0	0	1	0	0	1
10	0	0	0	1	0	1	0
11	0	0	0	1	0	1	1
12	0	0	0	1	1	0	0
13	0	0	0	1	1	0	1
14	0	0	0	1	1	1	0
15	0	0	0	1	1	1	1
16	0	0	1	0	0	0	0
17	0	0	1	0	0	0	1
18	0	0	1	0	0	1	0
19	0	0	1	0	0	1	1
20	0	0	1	0	1	0	0
⋮							
120	1	1	1	1	0	0	0
121	1	1	1	1	0	0	1
122	1	1	1	1	0	1	0
123	1	1	1	1	0	1	1
124	1	1	1	1	1	0	0
125	1	1	1	1	1	0	1

Descriptions of node address values are as follows.

Node Address Value	Description
00	If the Node Address value is set to '00', the option module uses *Device* **Parameter 05 [Net Addr Cfg]** to set the Node Address. See Setting the Node Address on page 30.
01...125	Node address used by the option module.
126	The default address setting.

The switch settings can be verified by viewing *Device* **Parameter 06 [Net Addr Act]**, a read-only parameter, with any of the following drive configuration tools:

- PowerFlex 20-HIM-A6 or 20-HIM-C6S HIM
- Connected Components Workbench software

Connecting the Option Module to the PowerFlex 750-Series Product

IMPORTANT Remove power from the product before installing the option module in the control pod.

1. Insert the option module into Port 4, 5, or 6 and tighten the module mounting screws into the pod mounting bracket. To properly ground the module to the PowerFlex 750-Series product, torque both mounting screws to 0.45...0.67 N•m (4.0...6.0 lb•in).
2. When another module (I/O, encoder, communication, and so forth) resides in the adjacent port to the **left** of the 20-750-PBUS option module—and the lower mounting screw of that module is a larger T15 Torx head screw, perform addition steps 2a through 2d. If the port is empty or the adjacent module already uses the smaller T8 Torx head mounting screws, save this spare screw for future use.

   The option module is shipped with a small bag containing a spare T8 Torx head mounting screw and an adhesive-backed polycarbonate insulator strip. The larger T15 Torx head mounting screw on the adjacent left module may electrically contact the metal PROFIBUS cable connector when attached to the PROFIBUS module. The polycarbonate insulator strip is provided to help prevent electrical contact between the smaller T8 Torx head mounting screw and the PROFIBUS cable metal connector when attached to the PROFIBUS module. Either of these possible electrical contact situations may cause faulty operation. To help prevent this, perform the following steps.

   a. Remove the adjacent module's lower mounting screw, the T15 Torx head screw closest to the bottom of the pod mounting bracket.

   To remove the captive T15 Torx head screw, the module must be removed to back the screw out of the mounting clip.

   b. Replace the larger T15 Torx head screw with the smaller, spare T8 Torx head mounting screw.

   c. Tighten the mounting screw to the pod mounting bracket to properly ground the adjacent module to the drive. Torque the screw to 0.45...0.67 N•m (4.0...6.0 lb•in).

   d. Attach the adhesive-backed polycarbonate strip to the metal PROFIBUS cable connector in a location that prevents electrical contact between the connector and the adjacent module's lower mounting screw when the connector is attached to the PROFIBUS module.

Connecting the Option Module to the Network

ATTENTION: Risk of injury or death exists. The PowerFlex drive may contain high voltages that can cause injury or death. Remove power from the drive, and then verify power has been discharged before connecting the option module to the network.

1. Remove power from the PowerFlex 750-Series product.
2. Remove the product cover and lift up the drive HIM bezel to its open position to access the drive control pod.
3. Use static control precautions.
4. Route the PROFIBUS cable through the bottom of the PowerFlex drive.
5. Connect a PROFIBUS connector to the cable.

   PROFIBUS connectors are available from a variety of sources and in various sizes. As such, there may be mechanical limitations that prohibit the use of some connectors. Phoenix SUBCON-PLUS-PROFIB/AX/SC (Part # 2744380), Siemens 6GK1500-0FC00, or Brad BM5G60PP4Mxxx are recommended for use with PowerFlex 750-Series drives.

Figure 2 - PROFIBUS Connector

6. Connect the PROFIBUS cable to the option module and secure it with the two screws on the connector.

IMPORTANT PROFIBUS communication may not operate correctly if the cable shield does not make full contact with the connector housing.

Figure 3 - Network Wiring Diagram

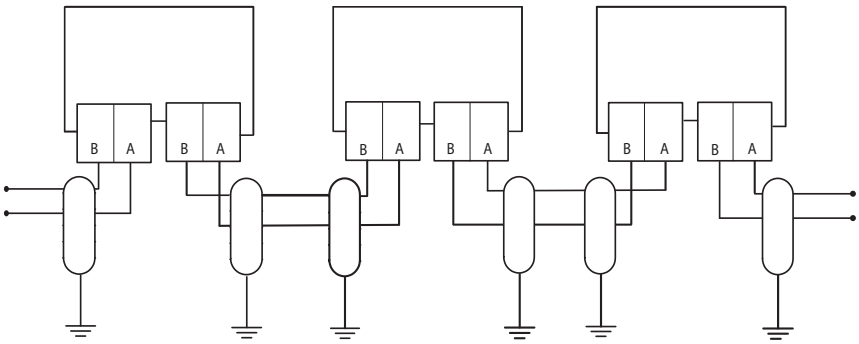

Terminal	Signal	Function
Housing	Shield	Bus cable shield (outer screen that surrounds A and B conductors)
1	Not connected	—
2	Not connected	—
3	B-LINE	Positive RxD/TxD, according to RS-485 specification
4	RTS	Request to Send
5	GND BUS	Network Zero Volt Reference (isolated from drive side)
6	+5V BUS	+5V output to network (isolated from drive side)
7	Not connected	—
8	A-LINE	Negative RxD/TxD according to RS-485 specification
9	Not connected	—

7. Ground the shield to reduce electrostatic pickup. However, shielding is only effective when the shield is properly connected to ground. See the PROFIBUS Installation Guideline for instructions to correctly ground the shield.

Figure 4 - Wiring Example

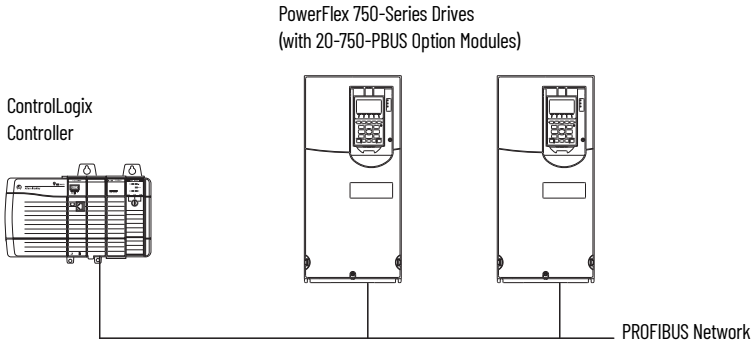

8. Connect the other end of the PROFIBUS cable that is routed through the bottom of the drive to the PROFIBUS network.

Network Termination

The first and last node on a PROFIBUS DP Network segment should be terminated.

Rockwell Automation recommends that you select one of the previously mentioned PROFIBUS connectors with built-in termination.

Applying Power

ATTENTION: Risk of equipment damage, injury, or death exists. Unpredictable operation may occur if you fail to verify that parameter settings are compatible with your application. Verify that settings are compatible with your application before applying power to the drive.

Apply power to the PowerFlex 750-Series product. The option module receives its power from the product. When you apply power to the option module for the first time, its topmost PORT status indicator should be steady green or flashing green after initialization. If it is red, there is a problem. See Chapter 7, Troubleshooting.

Startup Status Indications

The drive STS (status) indicator can be viewed on front of the product after power has been applied. The option module status indicators can be viewed with the drive cover open or removed (Figure 5).

Figure 5 - Drive and Option Module Status Indicators

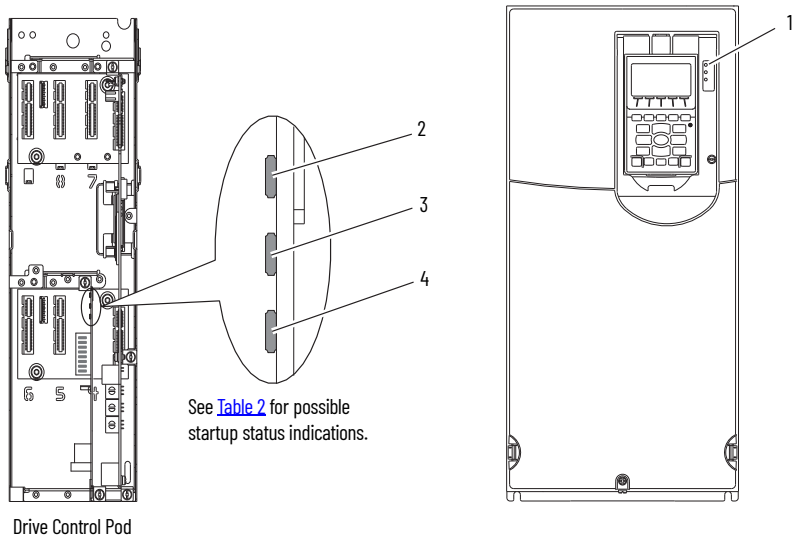

Table 2 - Drive and Option Module Startup Status Indications

Item	Name	Color	State	Description
Drive STS Indicator				
1	STS (Status)	Green	Flashing	Drive ready but not running, and no faults are present.
			Steady	Drive running, no faults are present.
		Yellow	Flashing	When running, a type 2 (non-configurable) alarm condition exists – drive continues to run. When stopped, a start inhibit condition exists and the drive cannot be started (see drive parameter 933 - [Start Inhibits]).
			Steady	A type 1 (user configurable) alarm condition exists, but the drive continues to run.
		Red	Flashing	A major fault has occurred. Drive will stop. Drive cannot be started until fault condition is cleared.
			Steady	A non-resettable fault has occurred.
		Red/Yellow	Flashing Alternately	A minor fault has occurred. Use drive parameter 950 - [Minor Flt Config] to enable. If not enabled, acts like a major fault. When running, the drive continues to run. System is brought to a stop under system control. The fault must be cleared to continue.
		Yellow/Green	Flashing Alternately	When running, a type 1 alarm exists.
		Green/Red	Flashing Alternately	Drive is updating.
Option Module Status Indicators				
2	PORT	—	Off	The option module is not powered or connected properly to the drive.
		Red	Flashing	The option module is not receiving any communication from drive.
			Steady	The option module detected a duplicate or invalid port ID.
		Green	Flashing	The option module is establishing communication with drive.
			Steady	The option module is properly connected and communicating with drive.
		Orange	Steady	The drive to which option module is connected is not an Allen-Bradley brand.
3	MOD	—	Off	The option module is not powered or connected properly to the drive.
		Red	Flashing	The option module has failed the firmware test or firmware update is in progress.
			Steady	The option module has failed the hardware test.
		Green	Flashing	The option module is operational but is not transferring I/O data.
			Steady	The option module is operational and is transferring I/O data.
4	NET A	—	Off	The option module cannot establish network communication or has experienced a Communication Timeout.
		Red	Flashing	The option module has detected a Network Configuration Error.
			Steady	The option module has experienced an internal network controller error (PROFIBUS ASIC Self-Test failure).
		Green	Steady	The option module is properly connected and communicating over the PROFIBUS network.

After verifying correct operation, swing down the drive HIM bezel to its closed position and install the drive cover. For more details on status indicator operation, see page 66 and page 67.

Configuring and Verifying Key Parameters

PowerFlex 750-Series products can be separately configured for the control and Reference functions in various combinations. For example, you could set the product to receive control commands from a peripheral or terminal block, with the Reference coming from the network. You could also set the product to receive its control from the network with the Reference coming from another peripheral or terminal block. Or you could set the product to receive both its control and Reference from the network.

The steps in this section assume that the product will receive the Logic Command and Reference from the network. In this process, you will associate the port where the PROFIBUS option module is installed with the applicable speed reference or velocity reference parameter. In this example, the screen captures reflect Connected Components Workbench and Port 4 is used. The process for other configuration tools will vary. This process is not applicable to bus supplies.

1. **753/755** - Verify that **Parameter 0:301 [Access Level]** is set to '1' (Advanced) or '2' (Expert) to access the required parameters in this procedure.

   755T - Verify that **Parameter 0:30 [Access Level]** is set to '1' (Advanced) or '2' (Expert) to access the required parameters in this procedure.

2. **753/755** - Select the Value column for **Parameter 0:545 [Speed Ref A Sel]**, type **874** in the **Search** field, then double-click the **Port 4 Reference** parameter to select it. See the PowerFlex 750-Series Programming Manual, publication 750-PM001, for the numeric value to use for other ports.

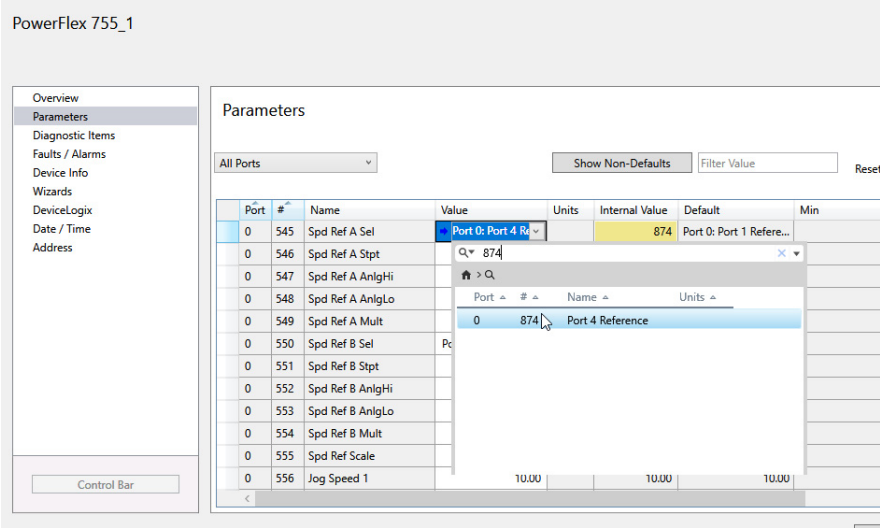

   755T - Select the Value column for **Parameter 10:1800 [VRef A Sel]**, type **217** in the **Search** field, then double-click the **Port 4 Reference** parameter to select it. See PowerFlex Drives with TotalFORCE® Control Programming Manual, publication 750-PM100, for the numeric value to use for other ports.

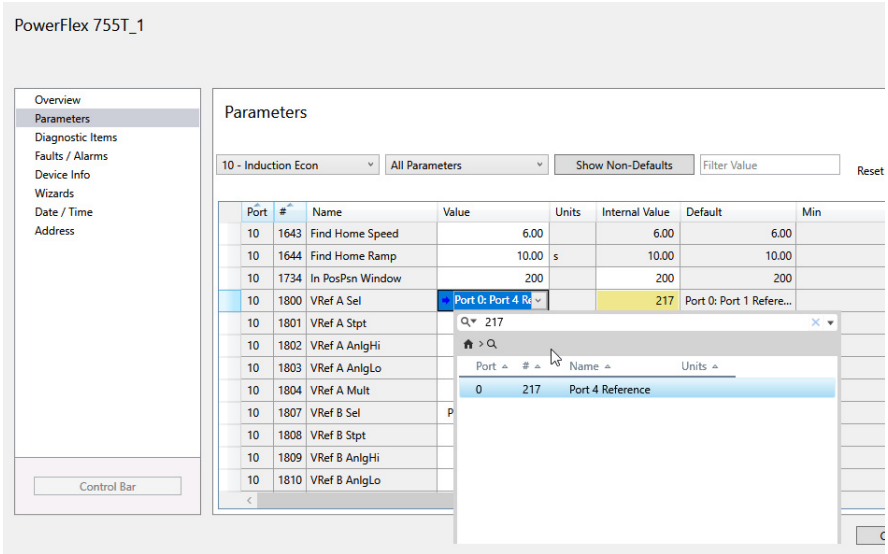

3. **753/755**: Verify that **Parameter 0:930 [Speed Ref Source]** is reporting that the source of the Reference to the drive (Port 0) is the port in which the option module is installed (for example, Port 4 Reference).

   This ensures that any Reference commanded from the network can be monitored by using drive **Parameter 0:002 [Commanded SpdRef]**. If a problem occurs, this verification step provides the diagnostic capability to determine whether the drive/option module or the network is the cause.

   755T: Verify that **Parameter 10/11:350 [VRef Source]** is reporting that the source of the Reference to the drive (Port 0) is the port in which the option module is installed (for example, Port 4 Reference).

   This ensures that any Reference commanded from the network can be monitored by using **Parameter 10/11:1914 [VRef Commanded]**. If a problem occurs, this verification step provides the diagnostic capability to determine whether the drive/option module or the network is the cause.

4. If hard-wired discrete digital inputs are not used to control the drive, verify that all unused digital input drive parameters are set to '0' (Not Used).

Notes:

Configuring the Option Module

This chapter provides instructions and information for setting the parameters to configure the option module.

Topic	Page
Configuration Tools	27
Using the PowerFlex 20-HIM-A6 or 20-HIM-C6S HIM to Access Parameters	28
Setting the Node Address	28
Setting a Leader-Follower Hierarchy (Optional)	28
Setting a Fault Action	30
Resetting the Option Module	32
Restoring Option Module Parameters to Factory Defaults	33
Viewing the Option Module Status Using Parameters	34
Updating the Option Module Firmware	34

For a list of parameters, see Appendix B, Option Module Parameters. For definitions of terms in this chapter, see the Glossary.

Configuration Tools

The option module stores parameters and other information in its own nonvolatile storage (NVS) memory. You must, therefore, access the option module to view and edit its parameters. The following tools can be used to access the option module parameters.

Tool	See
PowerFlex 20-HIM-A6 or 20-HIM-C6S HIM	page 28
Connected Components Workbench software, version 1.02 or later	http://www.ab.rockwellautomation.com/Drives/Software/9328-ConnectedComponentsWorkbench, or online help (installed with the software)

IMPORTANT For the HIM screens shown throughout this chapter, the option module was installed in Port 4. If your option module is installed in a different port, that port would appear instead of Port 4.

Using the PowerFlex 20-HIM-A6 or 20-HIM-C6S HIM to Access Parameters

If your drive has an enhanced PowerFlex 20-HIM-A6 or 20-HIM-C6S HIM, it can be used to access parameters in the option module.

1. Display the Status screen, which is shown on HIM power-up.
2. Use the 4 ◄ or ► 6 key to scroll to the Port in which the option module is installed.
3. Press the PAR# *soft key* to display the Jump to Param # entry popup box.
4. Use the numeric keys to enter the desired parameter number, or use the ▲ or ▼ *soft key* to scroll to the desired parameter number.

For details on viewing and editing parameters, see the PowerFlex 20-HIM-A6/-C6S HIM (Human Interface Module) User Manual, publication 20HIM-UM001.

Setting the Node Address

If the option module Node Address switches (Figure 1) are set to '00' (Program), the value of *Device* **Parameter 05 [Net Addr Cfg]** determines the node address. When the Node Address switches are in any other combination of positions, the switches determine the node address.

1. Set the value of *Device* **Parameter 05 [Net Addr Cfg]** to a unique node address.

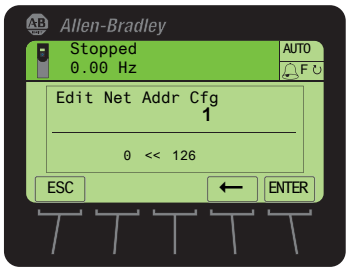

2. Reset the option module; see Resetting the Option Module on page 32.

Setting a Leader-Follower Hierarchy (Optional)

This procedure is only required if Datalinks are used to write or read data of the drive or its connected peripherals. A hierarchy determines the type of device with which the option module exchanges data. In a Leader-Follower hierarchy, the option module exchanges data with a PROFIBUS leader, such as a ProSoft MVI56-PDPMV1 PROFIBUS DP scanner. This scanner integrates, as a third-party module, in a ControlLogix controller backplane to allow PROFIBUS DP communications.

Enable Datalinks To Write Data

The controller output image (controller outputs-to-drive) can have 0...16 additional 32-bit parameters (Datalinks). They are configured using *Host* **Parameters 01 [DL From Net 01]** through **16 [DL From Net 16]**. The data type of a Datalink can be either a 32-bit REAL (floating point) or 32-bit integer. The number of Datalinks actively used is controlled by the connection size configured in the controller.

IMPORTANT	Always use the Datalink parameters in consecutive numerical order, starting with the first parameter. For example, use *Host* Parameters 01, 02, and 03 to configure three Datalinks to write data. Otherwise, the network I/O connection will be larger than necessary, which needlessly increases controller response time and memory usage.

When using a ControlLogix controller and the Generic Profile, configure the Datalink parameters now as described in this section.

Host **Parameters 01 [DL From Net 01]** through **16 [DL From Net 16]** control which parameters in the drive, option module, or any other connected peripheral receive the values from the network. You can use the PowerFlex 20-HIM-A6 or 20-HIM-C6S HIM, or another drive configuration tool such as Connected Components Workbench, to select the drive or peripheral by port number and the parameter by name. As an alternate method, the parameter value can be set manually by number using this formula:

From Net Parameter Value = (10000 * port number) + (Destination Parameter Number)

For example, suppose you want to use *Host* **Parameter 01 [DL From Net 01]** to write to Parameter 03 of an optional encoder module plugged into drive Port 5. Using the formula, the value for *Host* **Parameter 01 [DL From Net 01]** would be (10000 * 5) + (3) = 50003.

Follow these steps to enable Datalinks to write data.

1. Set the values of only the required number of contiguous controller-to-drive Datalinks needed to write data to the drive and that are to be included in the network I/O connection.
2. Reset the option module; see Resetting the Option Module on page 32.
3. Since the Logic Command and Reference is always used in the option module, configure the parameters in the PowerFlex 750-Series product to accept the Logic Command and Reference from the option module.
4. **753/755**: When using the controller for speed reference via the option module, set **Parameter 0:545 [Speed Ref A Sel**] to reflect the port where the option module is installed (typically Port 4, which has a value of 874).

   755T: When using the controller for velocity reference via the option module, set **Parameter 10:1800 [VRef A Sel]** to reflect the port where the option module is installed (typically Port 4, which has a value of 217).
5. **753/755**: Verify that the mask parameters (for example, **Parameter 0:324[Logic Mask]**) are configured to receive the desired logic from the option module. See the PowerFlex 750-Series product documentation for details.

   755T: Verify that the mask parameters (for example, **Parameter 0:41 [Logic Mask]**) are configured to receive the desired logic from the option module. See the PowerFlex 750-Series product documentation for details.

The option module is now ready to receive input data and transfer status data to the PROFIBUS leader (controller). Next, configure the controller to recognize and transmit I/O to the option module.

Enable Datalinks To Read Data

The controller input image (drive-to-controller inputs) can have 0...16 additional 32-bit parameters (Datalinks). They are configured using *Host* **Parameters 17 [DL To Net 01]** through **32 [DL To Net 16]**. The number of Datalinks actively used is controlled by the connection size in the controller. See the controller example sections in Chapter 4 for more information on setting the connection size.

IMPORTANT	Always use the Datalink parameters in consecutive numerical order, starting with the first parameter. For example, use *Host* Parameters 17, 18, 19, 20, and 21 to configure five Datalinks to read data. Otherwise, the network I/O connection will be larger than necessary, which needlessly increases controller response time and memory usage.

When using a ControlLogix controller and the Generic Profile, configure the Datalink parameters now as described in this section.

Host **Parameters 17 [DL To Net 01]** through **32 [DL To Net 16]** configure which parameters in the drive, option module, or any other connected peripheral send the values to the network. You can use the PowerFlex 20-HIM-A6 or 20-HIM-C6S HIM, or another drive configuration tool such as Connected Components Workbench, to select the drive or peripheral by port number and the parameter by name. As an alternate method, the parameter value can be set manually by number using this formula:

To Net Parameter Value = (10000 * Port Number) + (Origination Parameter Number)

For example, suppose you want to use *Host* **Parameter 17 [DL To Net 01]** to read Parameter 2 of an optional I/O module plugged into drive Port 6. Using the formula, the value for *Host* **Parameter 17 [DL To Net 01]** would be (10000 * 6)+ (2) = 60002.

Follow these steps to enable Datalinks to read data.

1. Set the values of only the required number of contiguous drive-to-controller Datalinks needed to read data from the drive and that are to be included in the network I/O connection.
2. Reset the option module; see Resetting the Option Module on page 32.

The option module is configured to send output data to the leader (controller). You must now configure the controller to recognize and transmit I/O to the option module.

Setting a Fault Action

By default, when communication is disrupted (for example, the network cable is disconnected) or the leader (controller) is idle, the product responds by faulting if it is using I/O from the network. You can configure a different response to these events:

- Disrupted I/O communication by using *Host* **Parameter 33 [Comm Flt Action].**

- An idle controller by using *Host* **Parameter 34 [Idle Flt Action]**.

ATTENTION: Risk of injury or equipment damage exists. *Host* **Parameters 33 [Comm Flt Action]**, and **34 [Idle Flt Action]** let you determine the action of the option module and connected drive if communication is disrupted or the leader (controller) is idle. By default, these parameters fault the drive. You may configure these parameters so that the drive continues to run, however, precautions should be taken to verify that the settings of these parameters do not create a risk of injury or equipment damage. When commissioning the drive, verify that your system responds correctly to various situations (for example, a disconnected network cable or controller in idle state).

Changing the Fault Action

Set the values of *Host* **Parameters 33 [Comm Flt Action]** and **34 [Idle Flt Action]** to any of these responses.

Value	Action	Description
0	Fault	The drive is faulted and stopped (default).
1	Stop	The drive is stopped, but not faulted.
2	Zero Data	The drive is sent 0 for output data. This does not command a stop.
3	Hold Last	The drive continues in its present state.
4	Send Flt Cfg	The drive is sent the data that you set in the fault configuration parameters (*Host* **Parameters 37 [Flt Cfg Logic]**, **38 [Flt Cfg Ref]**, and **39 [Flt Cfg DL 01]** through **54 [Flt Cfg DL16]**).

Figure 6 - Edit Fault Action HIM Screens

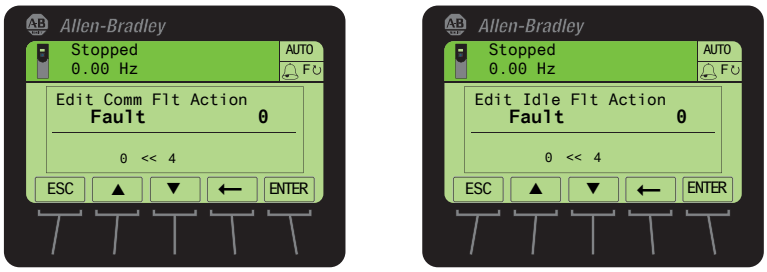

Changes to these parameters take effect immediately. A reset is not required.

If communication is disrupted and then is re-established, the drive will automatically receive commands over the network again.

Setting the Fault Configuration Parameters

When setting *Host* **Parameters 33 [Comm Flt Action]** and **34 [Idle Flt Action]** to 'Send Flt Cfg', the values in the following parameters are sent to the drive after a communication fault and/or idle fault occurs. You must set these parameters to values required by your application.

Option Module *Host* Parameter	Description
Parameter **37 [Flt Cfg Logic]**	A 32-bit value sent to the drive for Logic Command.
Parameter **38 [Flt Cfg Ref]**	A 32-bit REAL (floating point) value sent to the drive for Reference.
Parameter **39 [Flt Cfg DL 01]** ... Parameter **54 [Flt Cfg DL 16]**	A 32-bit integer value sent to the drive for a Datalink. If the destination of the Datalink is a REAL (floating point) parameter, you must convert the desired value to the binary representation of the REAL value. (An internet search of 'hex to float' provides a link to a tool to do this conversion.)

Changes to these parameters take effect immediately. A reset is not required.

Resetting the Option Module

Changes to switch settings and some option module parameters require you to reset the option module before the new settings take effect. You can reset the option module by power cycling the drive or by using *Device* **Parameter 07 [Reset Module]**.

ATTENTION: Risk of injury or equipment damage exists. If the option module is transmitting control I/O to the drive, the drive may fault when you reset the option module. Determine how your drive will respond before resetting the option module.

Figure 7 - Set Device Parameter 07 - [Reset Module] to '1' (Reset Module).

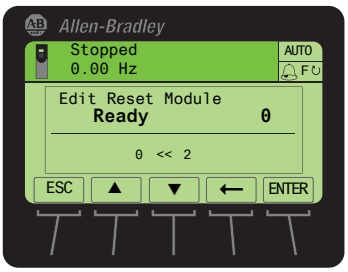

Value	Description
0	Ready (Default)
1	Reset Module
2	Set Defaults

When you enter '1' (Reset Module), the option module will be immediately reset. An alternate method to reset the module is by power cycling the drive. When you enter '2' (Set Defaults), the option module will set ALL of its *Device* **and** *Host* parameters to their factory default values. (This is the same as pressing the ALL *soft key* when using the MEMORY folder method described in Restoring Option Module Parameters to Factory Defaults on page 33). After performing a Set Defaults, you must enter '1' (Reset Module) or power cycle the drive so that the new values take effect. Thereafter, this parameter will be restored to a value of '0' (Ready).

IMPORTANT When performing a Set Defaults, the drive may detect a conflict and then not allow this function to occur. If this happens, first resolve the conflict and then repeat Set Defaults action. Common reasons for a conflict include the drive running or a controller in Run mode.

If your application allows, you can also reset the option module by cycling power to the drive (resetting the drive) or by using the HIM's Reset Device function located in the drive's DIAGNOSTIC folder.

Restoring Option Module Parameters to Factory Defaults

As an alternate reset method, you can restore the option module parameters using a MEMORY folder menu item instead of using *Device* **Parameter 07 [Reset Module]** described in Resetting the Option Module on page 32. The MEMORY folder method provides two ways to restore the option module *Device* **and** *Host* parameters:

- ALL—Restores ALL option module *Device* and *Host* parameters to their factory default values.
- MOST—Restores MOST option module *Device* and *Host* parameters—except *Device* **Parameter 05 [Net Addr Cfg]** which is used for network setup.

Follow these steps to restore option module *Device* and *Host* parameters to their factory default values.

1. Access the Status screen, which is displayed on HIM power-up.

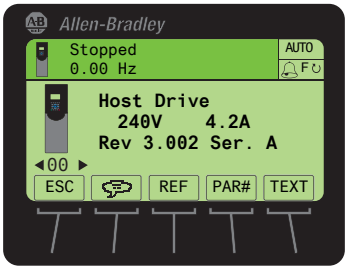

2. Use the 4 ◄ or ► 6 key to scroll to the Port in which the option module is installed.
3. Press the key to display its last-viewed folder.
4. Use the 4 ◄ or ► 6 key to scroll to the MEMORY folder.
5. Use the 2 or 8 key to select **Set Defaults**.
6. Press the 5 (Enter) key to display the Set Defaults popup box.
7. Press the 5 (Enter) key again to display the warning popup box to reset *Device* and *Host* parameters to their factory default values.
8. Press the MOST *soft key* to restore MOST *Device* and *Host* parameters to factory defaults, or press the ALL *soft key* to restore ALL parameters. Or press the ESC *soft key* to cancel.

IMPORTANT When performing a Set Defaults, the drive may detect a conflict and then not allow this function to occur. If this happens, first resolve the conflict and then repeat this Set Defaults procedure. Common reasons for a conflict include the drive running or a controller in Run mode.

9. Reset the option module using *Device* **Parameter 07 [Reset Module]** or by cycling power to the drive so that the restored parameters take effect.

Viewing the Option Module Status Using Parameters

The following parameters provide information about the status of the option module. You can view these parameters at any time.

Option Module *Device* Parameter	Description
02 [DLs From Net Act]	The number of controller-to-drive Datalinks that are included in the network I/O connection (controller outputs).
03 [DLs To Net Act]	The number of drive-to-controller Datalinks that are included in the network I/O connection (controller inputs).
04 [Net Addr Src]	Displays the source from which the option module node address is taken. This will be either '0' (Switches) set with the Node Address switches shown in Figure 1, or '1' (Parameters) which uses the address from *Device* **Parameter 05 [Net Addr Cfg]**.
06 [Net Addr Act]	The node address used by the option module. This will be one of the following values: • The address set by the Node Address switches (Figure 1). • The value of *Device* **Parameter 05 [Net Addr Cfg]**. • An old address of the switches or parameter if it has been changed and the option module has not been reset.

Updating the Option Module Firmware

The option module firmware can be updated over the network or serially through a direct connection from a computer to the drive using a 1203-USB or 1203-SSS serial converter.

When updating firmware over the network, you can use the Allen-Bradley ControlFLASH software tool, the built-in update capability of DriveExplorer Lite or Full software, or the built-in update capability of DriveExecutive software.

When updating firmware through a direct serial connection from a computer to a drive, you can use the same Allen-Bradley software tools described above, or you can use HyperTerminal software set to the X-modem protocol.

To obtain a firmware update for this option module, go to http://www.ab.com/support/abdrives/webupdate. This website contains all firmware update files and associated Release Notes that describe the following items:

- Firmware update enhancements and anomalies
- How to determine the existing firmware revision
- How to update the firmware using DriveExplorer, DriveExecutive, ControlFLASH, or HyperTerminal software

Configure the Option Module on Your PROFIBUS Network

Use the following procedure to configure the option module on your PROFIBUS network.

1. Configure your PROFIBUS gateway.

   You have to configure a PROFIBUS network with a gateway before you can add and configure your option module. Consult the user manual for your controller and gateway for information on setting up your products and establishing a PROFIBUS network.

2. Download the GSD file for your option card from the PCDC.

   You will require the corresponding GSD file to obtain basic configuration information about the PROFIBUS device you add to the network. The

GSDML configuration files identify the device's capabilities so that the PROFIBUS controller can communicate with it correctly.

3. Import the GSD file into your PROFIBUS project by using your chosen configuration tool.
4. Using the configuration tool, add your option card to your PROFIBUS network and configure it as a Follower device.

   You can configure up to 16 Datalinks for the option card.
5. Save and download your project to the PROFIBUS Gateway.

Notes:

Using the I/O

This chapter provides information and examples that explain how to control, configure, and monitor a PowerFlex 750-Series drive using PROFIBUS DPV0 messaging.

Topic	Page
About I/O Messaging	37
Understanding the I/O Image	38
Using Logic Command/Status	38
Using Reference/Feedback	39
Using Datalinks	39

ATTENTION: Risk of injury or equipment damage exists. The examples in this publication are intended solely for purposes of example. There are many variables and requirements with any application. Rockwell Automation does not assume responsibility or liability (to include intellectual property liability) for actual use of the examples shown in this publication.

About I/O Messaging

PROFIBUS DPV0 or I/O messaging is used to transfer the data which controls the PowerFlex drive and its Reference. I/O messaging can also be used to transfer data to and from Datalinks which are mapped to parameters in the PowerFlex 750-Series products.

The option module includes the Logic Command, Logic Status, Reference, and Feedback (all as 32-bit words) in the controller's I/O image. This basic I/O must always be configured by the PROFIBUS configuration tool to the 20-750-PBUS option module, enabling the ability to control and monitor the PowerFlex 750-Series product.

Additional I/O if needed, can be configured using up to 16 Datalinks to write data and/or up to 16 Datalinks to read data. When using any combination of these Datalinks, one 32-bit word for each Datalink will be added to the basic I/O Input Size and/or Output Size.

Chapter 3, Configuring the Option Module, and Chapter 4, Configuring the Profibus Master discuss how to configure the option module and controller on the network for the required I/O. This chapter discusses how to use the I/O after you have configured the option module and controller.

Understanding the I/O Image

The terms 'input' and 'output' are defined from the controller's point of view. Therefore, output I/O is data that is produced by the controller and consumed by the option module. Input I/O is status data that is produced by the option module and consumed as input by the controller. The I/O image will vary based on how many of the drive's 32-bit Datalinks (*Host* **DL From Net 01-16** and *Host* **DL To Net 01-16**) are used.

The I/O image can be configured based upon the number of Datalinks required by the user. Table 3 shows the I/O image when using all of the 32-bit Datalinks.

Table 3 - PROFIBUS I/O Image for PowerFlex 750-Series Drives (32-bit Logic Command/Status, Reference/Feedback, and Datalinks)

DINT	Output I/O
0	Logic Command
1	Reference
2	DL From Net 01
3	DL From Net 02
4	DL From Net 03
5	DL From Net 04
6	DL From Net 05
7	DL From Net 06
8	DL From Net 07
9	DL From Net 08
10	DL From Net 09
11	DL From Net 10
12	DL From Net 11
13	DL From Net 12
14	DL From Net 13
15	DL From Net 14
16	DL From Net 15
17	DL From Net 16

DINT	Input I/O
0	Logic Status
1	Feedback
2	DL To Net 01
3	DL To Net 02
4	DL To Net 03
5	DL To Net 04
6	DL To Net 05
7	DL To Net 06
8	DL To Net 07
9	DL To Net 08
10	DL To Net 09
11	DL To Net 10
12	DL To Net 11
13	DL To Net 12
14	DL To Net 13
15	DL To Net 14
16	DL To Net 15
17	DL To Net 16

Using Logic Command/ Status

The Logic Command is a 32-bit word of control data produced by the controller and consumed by the option module. The Logic Status is a 32-bit word of status data produced by the option module and consumed by the controller.

- Logic Command word is always the first 32-bit word in the output image.
- Logic Status word is always the first 32-bit word in the input image.

This manual contains the bit definitions for compatible products available at the time of publication in Appendix C, Logic Command/Status Words: PowerFlex 750-Series Drives.

Using Reference/Feedback

The Reference is a 32-bit REAL (floating point) piece of control data produced by the controller and consumed by the option module. The Feedback is a 32-bit REAL (floating point) piece of status data produced by the option module and consumed by the controller.

- Reference word is always the second 32-bit word in the output image.
- Feedback word is always the second 32-bit word in the input image.

The Reference and Feedback 32-bit REAL value represents drive speed. The scaling for the speed Reference and Feedback are dependent on drive Parameter 300 - [Speed Units]. For example, if Parameter 300 is set to Hz, a 32-bit REAL Reference value of '30.0' would equal a Reference of 30.0 Hz. If Parameter 300 is set to RPM, a 32- bit REAL Reference value of '1020.5' would equal a Reference of 1020.5 RPM. Note that the commanded maximum speed can never exceed the value of drive Parameter 520 - [Max Fwd Speed]. Table 4 shows example References and their results for a PowerFlex 750-Series drive that has its:

- **Parameter 300 [Speed Units]** set to Hz.
- **Parameter 37 [Maximum Freq]** set to 130 Hz.
- **Parameter 520 [Max Fwd Speed]** set to 60 Hz.

When **Parameter 300 [Speed Units]** is set to RPM, the other parameters are also in RPM.

Table 4 - PowerFlex 750-Series Drive Example Speed Reference/Feedback Scaling

Network Reference Value	Speed Command Value (2)	Output Speed	Network Feedback Value
130.0	130 Hz	60 Hz (3)	60.0
65.0	65 Hz	60 Hz (3)	60.0
32.5	32.5 Hz	32.5 Hz	32.5
0.0	0 Hz	0 Hz	0.0
-32.5 (1)	32.5 Hz	32.5 Hz	32.5

(1) The effects of values less than 0.0 depend on whether the PowerFlex 750 - Series drive uses a bipolar or unipolar direction mode. See the drive documentation for details.
(2) For this example, drive **Parameter 300 [Speed Units]** is set to Hz.
(3) The drive runs at 60 Hz instead of 130 Hz or 65 Hz because drive **Parameter 520 [Max Fwd Speed]** sets 60 Hz as the maximum speed.

Using Datalinks

A Datalink is a mechanism used by PowerFlex drives to transfer data to and from the controller. Datalinks allow a drive parameter value to be read from or written to without using a PROFIBUS DPV1 Service. When enabled, each Datalink occupies one 32-bit word in a ControlLogix controller, providing a mirror of the PowerFlex 750-Series drive data value that the Datalinked parameter represents.

The following rules apply when using PowerFlex 750-Series drive Datalinks:

- The target of a Datalink can be any *Host* parameter, including those of a peripheral. For example, drive parameter 535 - [Accel Time 1] can be the target of any or all option modules installed in the drive.
- The data passed through the Datalink mechanism is determined by the settings of *Host* **Parameters 01...16 [DL From Net 01-16]** and *Host* **Parameters 17...32 [DL To Net 01-16]**.

IMPORTANT A reset is always required after configuring Datalinks so that the changes take effect.

- When an I/O connection that includes Datalinks is active, those Datalinks being used are locked and cannot be changed until that I/O connection becomes idle or inactive.
- When you use a Datalink to change a value, the value is **not** written to the Nonvolatile storage (NVS) memory. The value is stored in volatile memory and lost when the drive loses power. Thus, use Datalinks when you need to change the value of a parameter frequently.

Datalinks for PowerFlex 750-Series drive peripherals (the embedded EtherNet/IP adapter on only PowerFlex 755 drives and option modules such as an encoder or a communication module) are locked when the peripheral has an I/O connection with a controller. When a controller has an I/O connection to the drive, the drive does not allow a reset to defaults, configuration download, or anything else that could change the makeup of the I/O connection in a running system. The I/O connection with the controller must first be disabled to allow changes to the respective Datalinks.

Depending on the controller being used, the I/O connection can be disabled by doing the following:

- Putting the controller in Program mode
- Disconnecting the drive from the network
- Placing the leader in idle mode

DeviceLogix Datalinks are also locked while the DeviceLogix program is running. The DeviceLogix program must first be disabled to allow changes to the Datalinks. Set DeviceLogix parameter 53 [DLX Operation] to 'DisableLogic' to disable the logic (the parameter value will then change to 'LogicDisabld').

A COP (Copy) instruction or a UDDT is needed—for REAL parameters, speed Reference, and speed Feedback only—to copy the DINT data into a REAL word for input data conversion. For output data conversion, a COP (Copy) instruction or UDDT is needed—for REAL parameters, speed Reference, and speed Feedback only—to copy the REAL data into a DINT word. To determine whether a parameter is a 32-bit integer (DINT) or a REAL data type, see the Data Type column in the chapter containing parameters in the PowerFlex 750-Series AC Drives Programming Manual, publication 750-PM001, and publication 750-PM001, the PowerFlex Drives with TotalFORCE Control Programming Manual, publication 750-PM100.

Acyclic Messaging

This chapter provides information and examples that explain how to use PROFIBUS Class 1 DPV1 Acyclic Messaging to configure and monitor the PowerFlex® 750-Series drive through the 20-750-PBUS option module.

Topic	Page
About Acyclic Messaging	41
Acyclic Messaging for DPV1 Class 1	45
Example Messaging	45

ATTENTION: Risk of injury or equipment damage exists. The examples in this publication are intended solely for purposes of example. There are many variables and requirements with any application. Rockwell Automation does not assume responsibility or liability (to include intellectual property liability) for actual use of the examples shown in this publication.

ATTENTION: Risk of equipment damage exists. If Acyclic Messages are programmed to write parameter data to Non-Volatile Storage (NVS) frequently, the NVS will quickly exceed its life cycle and cause the drive to malfunction. Do not create a program that frequently uses Acyclic Messages to write parameter data to NVS. Datalinks do not write to NVS and should be used for frequently changed parameters.

About Acyclic Messaging

Acyclic messaging is used to transfer data to the PowerFlex 750-Series drive through the 20-750-PBUS option module and other connected peripherals that do not require continuous updates. Acyclic messaging, or DPV1 messaging in the case of the 20-750-PBUS option module, is also used to configure and monitor a drive's parameters on a PROFIBUS network. Drive parameters as well as peripheral *Host* and *Device* parameters can be accessed via acyclic messaging for a PowerFlex 750-Series drive.

For a full list of drive parameters, see the PowerFlex 750-Series AC Drives Programming Manual, publication 750-PM001, and the PowerFlex Drives with TotalFORCE Control Programming Manual, publication 750-PM100. For a list of 20-750-PBUS option module *Host* and *Device* Parameters, see Appendix B. To use acyclic messaging read and write services, you need the values of the slot and index to which a parameter is associated. Value ranges for slot and index are shown in Table 5.

Table 5 - PROFIBUS Slot and Index for Drive and Option Module Parameters

PowerFlex 753, 755					Device	PowerFlex 755T				
PROFIBUS Slot		PROFIBUS Index		Size		PROFIBUS Slot		PROFIBUS Index		Size
0	0x00	0 ...255	0x00...0xFF	1024	Profibus Parameters	0	0x00	0...3840	0x00...0xF00	255
1...62	0x00...0x3E	0...255	0x00...0xFF	16,065	Host Drive (Port 0)	-				
63	0x3F	0...255	0x00...0xFF	1024	Option Module	-				
67	0x43	0...255	0x00...0xFF	1024	Port 1 Parameters	15	0x0F	0...255	0x00...0xFF	255
71	0x47	0...255	0x00...0xFF	1024	Port 2 Parameters	16	0x10	0...255	0x00...0xFF	255
75	0x4B	0...255	0x00...0xFF	1024	Port 3 Parameters	17	0x11	0...255	0x00...0xFF	255
79	0x4F	0...255	0x00...0xFF	1024	Port 4 Parameters	18	0x12	0...255	0x00...0xFF	255
83	0x53	0...255	0x00...0xFF	1024	Port 5 Parameters	19	0x13	0...255	0x00...0xFF	255
87	0x57	0...255	0x00...0xFF	1024	Port 6 Parameters	20	0x14	0...255	0x00...0xFF	255
91	0x5B	0...255	0x00...0xFF	1024	Port 7 Parameters	21	0x15	0...255	0x00...0xFF	255
95	0x5F	0...255	0x00...0xFF	1024	Port 8 Parameters	22	0x16	0...255	0x00...0xFF	255
99	0x63	0...255	0x00...0xFF	1024	Port 9 Parameters	23	0x17	0...255	0x00...0xFF	255
103	0x67	0...255	0x00...0xFF	1024	Port 10 Parameters	24	0x18	0...255	0x00...0xFF	255
107	0x6B	0...255	0x00...0xFF	1024	Port 11 Parameters	25	0x19	0...255	0x00...0xFF	255
111	0x6F	0...255	0x00...0xFF	1024	Port 12 Parameters	26	0x1A	0...255	0x00...0xFF	255
115	0x73	0...255	0x00...0xFF	1024	Port 13 Parameters	27	0x1B	0...255	0x00...0xFF	255
119	0x77	0...255	0x00...0xFF	1024	Port 14 Parameters	28	0x1C	0...255	0x00...0xFF	255
195	0xC3	0...255	0x00...0xFF	1024	Port 1 Host Parameters	30	0x1E	0...255	0x00...0xFF	255
199	0xC7	0...255	0x00...0xFF	1024	Port 2 Host Parameters	31	0x1F	0...255	0x00...0xFF	255
203	0xCB	0...255	0x00...0xFF	1024	Port 3 Host Parameters	32	0x20	0...255	0x00...0xFF	255
207	0xCF	0...255	0x00...0xFF	1024	Port 4 Host Parameters	33	0x21	0...255	0x00...0xFF	255
211	0xD3	0...255	0x00...0xFF	1024	Port 5 Host Parameters	34	0x22	0...255	0x00...0xFF	255
215	0xD7	0...255	0x00...0xFF	1024	Port 6 Host Parameters	35	0x23	0...255	0x00...0xFF	511
219	0xDB	0...255	0x00...0xFF	1024	Port 7 Host Parameters	37	0x25	0...255	0x00...0xFF	511
223	0xDF	0...255	0x00...0xFF	1024	Port 8 Host Parameters	39	0x27	0...255	0x00...0xFF	2047
227	0xE3	0...255	0x00...0xFF	1024	Port 9 Host Parameters	47	0x2F	0...255	0x00...0xFF	4095
231	0xE7	0...255	0x00...0xFF	1024	Port 10 Host Parameters	63	0x3F	0...255	0x00...0xFF	4095
235	0xEB	0...255	0x00...0xFF	1024	Port 11 Host Parameters	79	0x4F	0...255	0x00...0xFF	4095
239	0xEF	0...255	0x00...0xFF	1024	Port 12 Host Parameters	95	0x5F	0...255	0x00...0xFF	4095
243	0xF3	0...255	0x00...0xFF	1024	Port 13 Host Parameters	111	0x6F	0...255	0x00...0xFF	4095
247	0xF7	0...255	0x00...0xFF	1024	Port 14 Host Parameters	127	0x7F	0...255	0x00...0xFF	4095

For accessing any parameter within a drive, a general mechanism is used to map the parameter with a PROFIBUS slot and index number.

Every drive device port has a base slot number which supports 256 indices in a slot. These slot and index combinations are mapped to various drive and option module parameters through the 20-750-PBUS option module. These are the general formulas used to determine the slot and index numbers for a specific parameter.

Slot Number = Base Slot Number + Quotient of (parameter number / 256)
Index Number = Remainder of (parameter number / 256)

Due to PROFIBUS standard requirements of various identification and maintenance functions, there is an exception to the rule for assigning *Host* drive parameters. When accessing drive parameters, the slot number will start at 0x01. This is the formula used to determine the slot number for a *Host* drive parameter.

Slot Number = Base Slot Number + Quotient of (parameter number / 256) + 1

Examples

The following examples illustrate the use of these formulas.

Example 1: 753/755

To access **Drive parameter 25 [Motor NP Volts]**, see Table 5 to find the slot number associated with Port 0, which can be used to access the first 256 parameters. To access parameters 257...512, the slot number will increment by 1, and so on.

For the drive (Port 0), the base slot number is 0x00 + 1 (per the exception). Therefore, the slot number can be calculated using the general formula:

Slot Number = 0x00 + Quotient of (25 / 256) + 1 = 0x01

The index number will be the remainder of the drive parameter number divided by 256, as shown using this formula:

Index Number = Remainder of (25 / 256) = 25

Example 1: 755T

To access **Drive parameter 3 [DC Bus Volts]**, see Table 5 to find the slot number associated with Port 0, which can be used to access the first 256 parameters. To access parameters 257...512, the slot number will increment by 1, and so on.

For the drive (Port 0), the base slot number is 0x00 + 1 (per the exception). Therefore, the slot number can be calculated using the general formula:

Slot Number = 0x00 + Quotient of (3 / 256) + 1 = 0x01

The index number will be the remainder of the drive parameter number divided by 256, as shown using this formula:

Index Number = Remainder of (3 / 256) = 3

Example 2: 753/755

To access **Host Parameter 37 [Flt Cfg Logic]** in the option module when the module is installed in drive Port 4, see Table 5 to find the Slot Number associated with Port 4 Host Parameters.

For Port 4 Host parameters, the base slot number is 0x3F. Therefore, the slot number can be calculated using the general formula:

Slot Number = 0xCF + Quotient of (37 / 256) + 1 = 0xD0

The index number will be the remainder of the Port 4 Host parameter number divided by 256, as shown using this formula:

Index Number = Remainder of (37 / 256) = 37

Example 2: 755T

To access **Host Parameter 37 [Flt Cfg Logic]** in the option module when the module is installed in drive Port 4, see Table 5 to find the Slot Number associated with Port 4 Host Parameters.

For Port 4 Host parameters, the base slot number is 0x21. Therefore, the slot number can be calculated using the general formula:

Slot Number = 0x21 + Quotient of (37 / 256) + 1 = 0x22

The index number will be the remainder of the Port 4 Host parameter numberdivided by 256, as shown using this formula:

Index Number = Remainder of (37 / 256) = 37

Example 3: 753/755

To access **Host Parameter 1 [Sys Rated Amps]** in the option module when the module is installed in drive Port 10, see Table 5 to find the Slot Number associated with Port 10 Host Parameters.

For Port 10 Host parameters, the base slot number is 0xE7. Therefore, the slot number can be calculated using the general formula:

Slot Number = 0xE7+ Quotient of (1 / 256) = 0xE8

The index number will be the remainder of the Port 4 Host parameter number divided by 256, as shown using this formula:

Index Number = Remainder of (37 / 256) = 1

Example 3: 755T

To access **Host Parameter 1 [Output Frequency]** in the option module when the module is installed in drive Port 10, see Table 5 to find the Slot Number associated with Port 10 Host Parameters.

For Port 10 Host parameters, the base slot number is 0x3F. Therefore, the slot number can be calculated using the general formula:

Slot Number = 0x3F + Quotient of (1 / 256) = 0x40

The index number will be the remainder of the Port 4 Host parameter number divided by 256, as shown using this formula:

Index Number = Remainder of (1 / 256) = 1

Acyclic Messaging for DPV1 Class 1

The 20-750-PBUS option module provides the following PROFIBUS DPV1 Class 1 Acyclic Services:

- READ—This service is used to read a parameter in the PowerFlex 750-Series drive or the option module.
- WRITE—This service is used to modify a parameter in the PowerFlex 750-Series drive or the option module.

Example Messaging

Examples of using PROFIBUS DPV1 Class 1, Acyclic Messaging to read and write a drive parameter is described in this section.

Read Example for Drive Parameter 1 - [Output Frequency]

To read the PowerFlex 750-Series drive parameter 1 - [Output Frequency] using a Class 1 Acyclic Read Service, setup a ControlLogix controller (with a MVI56-PDPMV1 PROFIBUS Module). After the leader is setup, the ControlLogix tags must be populated with the values to read the parameter as shown in Figure 8.

Drive Parameter 1 - [Output Frequency]:

- Slot Number = 0x00 + Quotient of (1 / 256) + 1= 1
- Index Number = Remainder of (1 / 256) = 1
- Length in bytes of the value of the parameter (32 bit floating point value) / 8 = 4

To test the Read service, you may manually enter the values as shown below into the MVI56-PDPMV1 controller scoped tags, where a ProSoft MVI56-PDPMV1 PROFIBUS leader module is installed in the backplane of the ControlLogix controller rack.

- MVI56PDPMV1.Mailbox.AcyclicRead.Out.SlotNumber = 1
- MVI56PDPMV1.Mailbox.AcyclicRead.Out.SlaveAddress = 3
- MVI56PDPMV1.Mailbox.AcyclicRead.Out.Length = 4
- MVI56PDPMV1.Mailbox.AcyclicRead.Out.Index = 1

Next, manually enter a value of '1' into the MVI56PDPMV1.MailboxCommand.AcyclicRead tag, to send the message.

Figure 8 - Acyclic Class 1 Read for Parameter 1 - [Output Frequency]

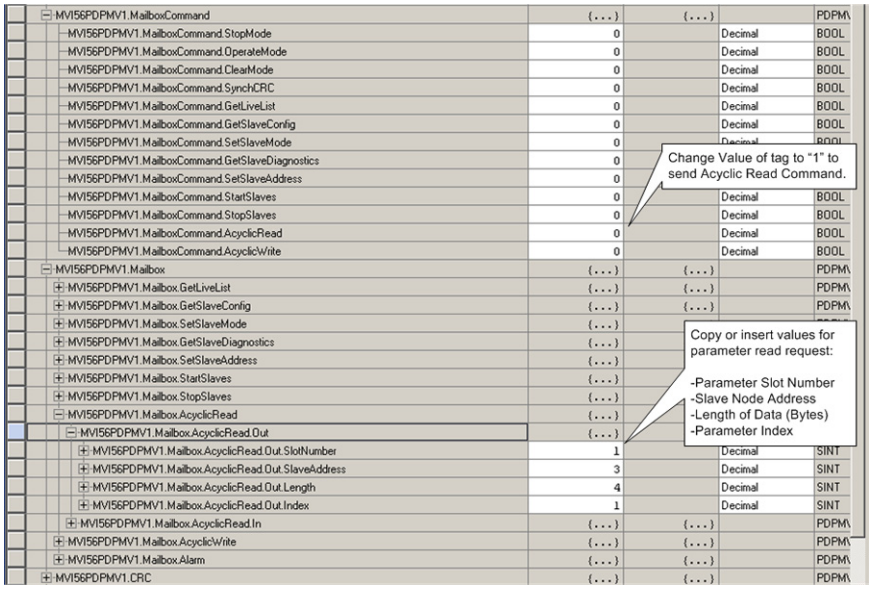

When the message response successfully returns, the data for the Output Frequency parameter will be placed in the tags MVI56PDPMV1.Mailbox.AcyclicRead.In.Data[] byte array. In the controller program, the return message data may be copied to a locally configured program tag, and converted by correctly assigning the data type for the Local tag to which the data returned from the read request matches. In this drive parameter 1 - [Output Frequency] example, the local tag's data type should be a floating point or a 'REAL' data type.

Acyclic Class 1 Read response data can be viewed as shown in Figure 9.

Figure 9 - Acyclic Class 1 Read Response Data for Parameter 1 - [Output Frequency]

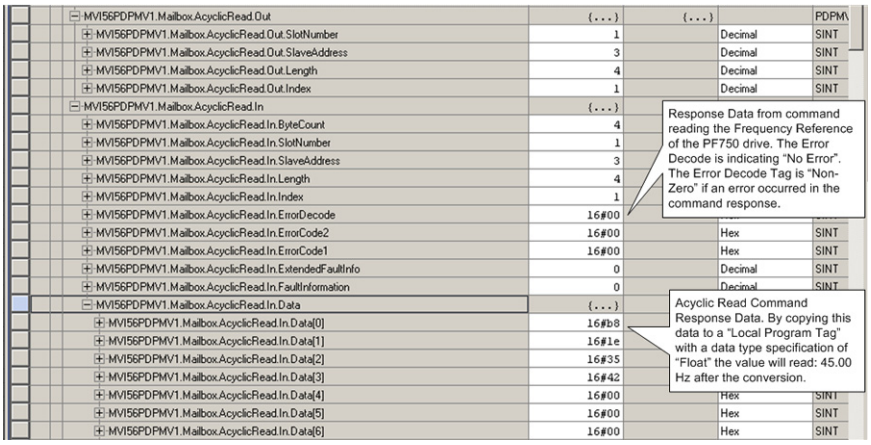

Figure 10 shows the RSLogix™ ladder logic example, that may be used to interface the MVI56-PDPMV1 module's functional block and perform continuous DPV1 Acyclic Read operations.

Figure 10 - Acyclic Class 1 Read Response Data using RSLogix Ladder Logic

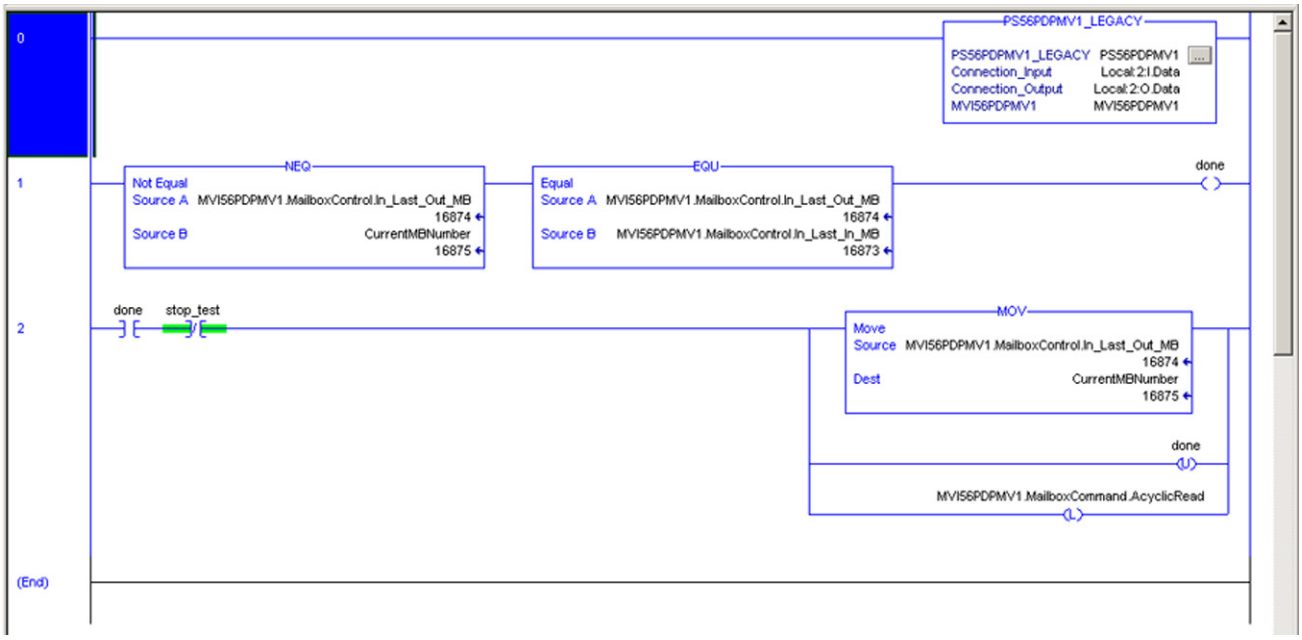

Write Example for Drive Parameter 520 [Max Fwd Speed]

To write to the PowerFlex 750-Series drive parameter 520 [Max Fwd Speed] using a Class 1 Acyclic Write Service, setup a ControlLogix controller (with a MVI56-PDPMV1 PROFIBUS module). After the leader is setup, the ControlLogix tags must be populated with the correct slot and index addressing values to write the parameter as shown in Figure 11.

Drive Parameter 520 - [Max Fwd Speed]:

- Slot No. = 0x00 + Quotient of (520 / 256) + 1 = 3
- Index No. = Remainder of (520 / 256) = 8
- Length in bytes of the value of the Parameter (32 bit floating point value) / 8 = 4

To test the Write Service, you may manually enter the values as shown below into the MVI56-PDPMV1 controller scoped tags where a ProSoft MVI56-PDPMV1 PROFIBUS leader module has been installed in the backplane of the ControlLogix controller rack.

- MVI56PDPMV1.Mailbox.AcyclicWrite.Out.SlotNumber = 3
- MVI56PDPMV1.Mailbox.AcyclicWrite.Out.SlaveAddress = 3
- MVI56PDPMV1.Mailbox.AcyclicWrite.Out.Length = 4
- MVI56PDPMV1.Mailbox.AcyclicWrite.Out.Index = 8

The data bytes to be written can be entered in the MVI56PDPMV1.Mailbox.AcyclicWrite.Out.Data[] array, or the data may be copied via ladder logic and a locally configured program tag which represents the correct data type, for the data value, to be written to drive parameter 520. In this example, the value would be a floating point or 'REAL' data type. The value shown in Figure 11, indicates a value of 60.00 Hz.

Figure 11 - Acyclic Class 1 Write for Parameter 520 - [Max Fwd Speed]

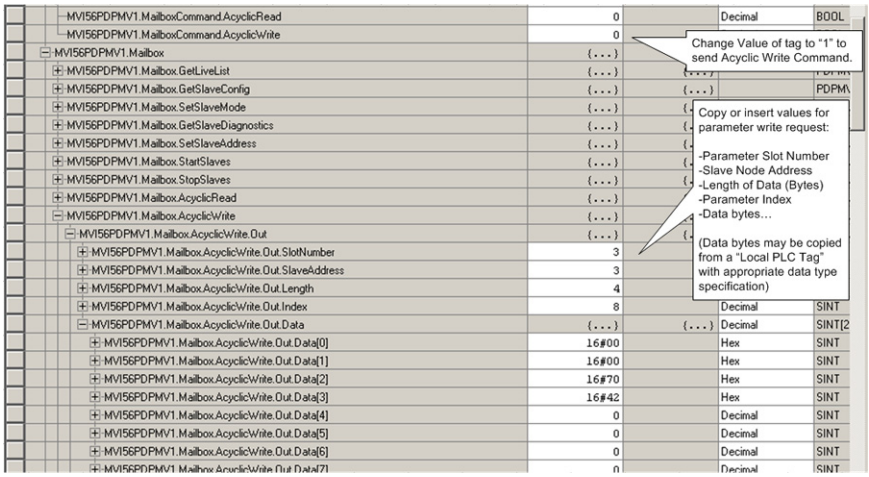

To manually trigger the message to be sent, enter a value of '1' into the MVI56PDPMV1.MailboxCommand.AcyclicWrite tag.

The message response status indicates success when the data in the 'MVI56PDPMV1.Mailbox.AcyclicWrite.In.ErrorDecode' tag is a value of 0x00. Note that any non-zero value indicates an error has occurred.

Acyclic Class 1 Write response data can be viewed as shown in Figure 12.

Figure 12 - Acyclic Class 1 Write Response Data for Parameter 520 - [Max Fwd Speed

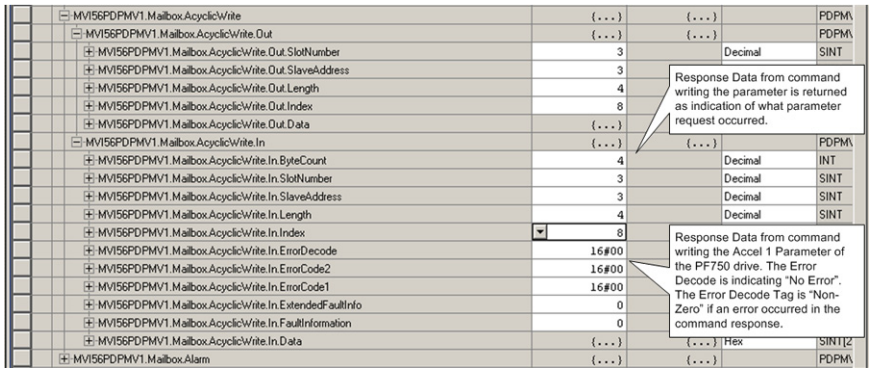

Troubleshooting

This chapter provides information for diagnosing and troubleshooting potential problems with the option module and network.

Topic	Page
Understanding the Status Indicators	49
PORT Status Indicator	50
MOD Status Indicator	50
NET A Status Indicator	50
Viewing Option Module Diagnostic Items	51
Viewing and Clearing Events	52

Understanding the Status Indicators

The option module has three status indicators. They can be viewed with the drive cover removed.

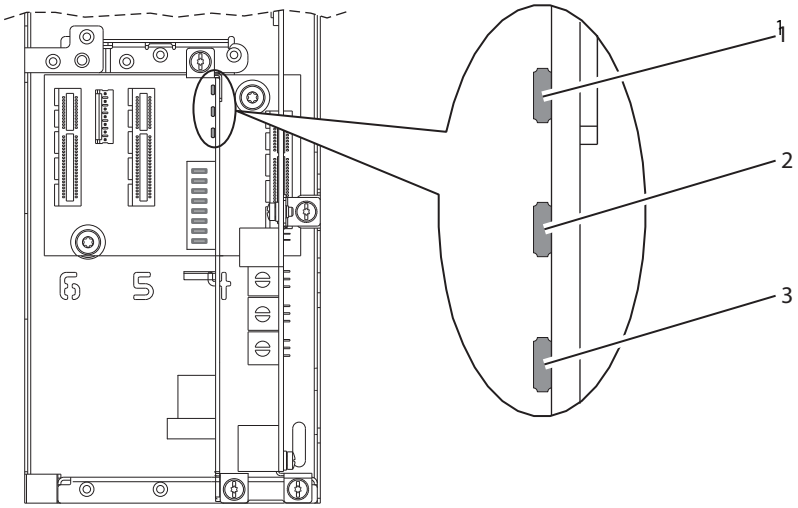

Item	Status Indicator	Description	Page
1	PORT	DPI Connection Status	50
2	MOD	Option Module Status	50
3	NET A	PROFIBUS Status	50

PORT Status Indicator

This red/green bicolor LED indicates the status of the option module connection to the drive as shown in the table below.

Status	Cause	Corrective Action
Off	The option module is not powered or connected properly to the drive.	Securely connect and ground the option module to the drive by fully inserting it into the drive port and tightening its two captive screws to the recommended torque. Apply power to the drive.
Flashing Red	The option module is not receiving any communication from drive.	Verify that cables are securely connected. Cycle power to the drive.
Steady Red	The option module detected a duplicate or invalid port ID.	**Important:** Cycle power to the drive after making any of the following corrections: Securely connect and ground the option module to the drive by fully inserting it into the drive port and tightening its two captive screws to the recommended torque. Configure the option module and PowerFlex drive to use a Datalink that is not already being used by another peripheral.
Flashing Green	The option module is establishing communication with drive.	No action required. This status indicator will turn steady green or red.
Steady Green	The option module is properly connected and communicating with drive.	No action required.
Steady Orange	The brand of the option module and drive do not match.	Connect the option module to a compatible product of the same brand (a PowerFlex 750-Series drive).

MOD Status Indicator

This red/green bicolor LED indicates the status of the option module as shown in the table below.

Status	Cause	Corrective Action
Off	The option module is not powered or connected properly to the drive.	Securely connect and ground the option module to the drive by fully inserting it into the drive port and tightening its two captive screws to the recommended torque. Apply power to the drive and network.
Flashing Red	The option module has failed the firmware test.	Cycle power to the drive. Parameter settings may have been changed. Clear faults in the option module. If cycling power does not correct the problem, the option module parameter settings may have been corrupted. Reset defaults and reconfigure the option module. If resetting defaults does not correct the problem, update the option module with the latest firmware revision.
Steady Red	The option module has failed the hardware test.	Cycle power to the drive. Replace the option module.
Flashing Green	The option module is operational but is not transferring I/O data.	Place the leader in RUN mode. Configure the option module for the program in the controller. Program the controller to recognize and transmit I/O to the option module. Normal behavior if no I/O is being transferred.
Steady Green	The option module is operational and is transferring I/O data.	No action required.

NET A Status Indicator

This red/green bicolor LED indicates the status of the PROFIBUS connection to the 20-750-PBUS option module as shown in the table below.

Status	Cause	Corrective Actions
Off	The option module cannot establish network communication or has experienced a Communication Timeout.	Securely connect the option module to the drive and connect it to the network using a PROFIBUS cable. Correctly connect the PROFIBUS cable to the PROFIBUS connector. Apply power to the drive.
Flashing Red	The option module has detected a Network Configuration Error.	Re-configure the PROFIBUS module.
Steady Red	The option module has experienced an internal network controller error (PROFIBUS ASIC Self-Test failure).	Cycle power to the drive. Re-configure the PROFIBUS leader.
Steady Green	The option module is properly connected and communicating over the PROFIBUS network.	No action required.

Viewing Option Module Diagnostic Items

If you encounter unexpected communications problems, the option module's diagnostic items may help you or Rockwell Automation personnel troubleshoot the problem. Option module diagnostic items can be viewed with any of these drive configuration tools:

- PowerFlex 20-HIM-A6 or 20-HIM-C6S HIM
- Connected Components Workbench software, version 1.02 or later

For details on viewing diagnostic items with the HIM, see the PowerFlex 20-HIM-A6/-C6S HIM (Human Interface Module) User Manual, publication 20HIM-UM001.

Table 6 - Option Module Diagnostic Items

No.	Name	Description
1	Common Logic Cmd	The present value of the Common Logic Command being transmitted to the drive by this option module.
2	Prod Logic Cmd	The present value of the Product Logic Command being transmitted to the drive by this option module from the controller.
3	Reference	The present value of the Reference being transmitted to the drive by this option module.
4	Common Logic Sts	The present value of the Common Logic Status being received from the drive by this option module.
5	Prod Logic Sts	The present value of the Product Logic Status being received from the drive by this option module from the controller.
6	Feedback	The present value of the Feedback being received from the drive by this option module.
7	Input Size	The size of the input image in bytes transferred from the network to the drive.
8	Output Size	The size of the output image in bytes transferred from the drive to the network.
9	DL Fr Net Avail	The number of *Host* **DL From Net xx** Datalinks currently available to the option module.
10	DL To Net Avail	The number of *Host* **DL To Net xx** Datalinks currently available to the option module
11	DL Fr Net 01 Val	The present value of respective *Host* **DL From Net xx** parameter being transmitted to the drive by this option module. (If not using a Datalink, its respective value should be zero.)
12	DL Fr Net 02 Val	
13	DL Fr Net 03 Val	
14	DL Fr Net 04 Val	
15	DL Fr Net 05 Val	
16	DL Fr Net 06 Val	
17	DL Fr Net 07 Val	
18	DL Fr Net 08 Val	
19	DL Fr Net 09 Val	
20	DL Fr Net 10 Val	
21	DL Fr Net 11 Val	
22	DL Fr Net 12 Val	
23	DL Fr Net 13 Val	
24	DL Fr Net 14 Val	
25	DL Fr Net 15 Val	
26	DL Fr Net 16 Val	

Table 6 - Option Module Diagnostic Items (Continued)

No.	Name	Description
27	DL To Net 01 Val	The present value of respective *Host* **DL To Net xx** parameter being received from the drive by this option module. (If not using a Datalink, its respective value should be zero.)
28	DL To Net 02 Val	
29	DL To Net 03 Val	
30	DL To Net 04 Val	
31	DL To Net 05 Val	
32	DL To Net 06 Val	
33	DL To Net 07 Val	
34	DL To Net 08 Val	
35	DL To Net 09 Val	
36	DL To Net 10 Val	
37	DL To Net 11 Val	
38	DL To Net 12 Val	
39	DL To Net 13 Val	
40	DL To Net 14 Val	
41	DL To Net 15 Val	
42	DL To Net 16 Val	
43	DPI Rx Errs	The present value of the DPI Receive error counter.
44	DPI Rx Errs Max	The maximum value (since reset) of the DPI Receive Error counter.
45	DPI Tx Errs	The present value of the DPI Transmit error counter.
46	DPI Tx Errs Max	The maximum value (since reset) of the DPI Transmit Error counter.
47	Net RX Cnt	Number of PROFIBUS telegrams received by PROFIBUS ASIC.
48	Net RX Err Cnt	Number of erroneous PROFIBUS telegrams received by the PROFIBUS ASIC since the last time it went into Data Exchange mode.
49	Net RX Terr Cnt	Total number of erroneous PROFIBUS telegrams received by the PROFIBUS ASIC since the last power cycle.
50	Boot Flash Count	Number of times the boot firmware in the option module has been flash updated.
51	App Flash Count	Number of times the application firmware in the option module has been flash updated.

Viewing and Clearing Events

The option module has an event queue to record significant events that occur in the operation of the module. When such an event occurs, an entry consisting of the event's numeric code and a timestamp is put into the event queue. You can view the event queue with any of these drive configuration tools:

- PowerFlex 20-HIM-A6 or 20-HIM-C6S HIM
- Connected Components Workbench software, version 1.02 or later

For details on viewing and clearing events with the HIM, see the PowerFlex 20-HIM-A6/-C6S HIM (Human Interface Module) User Manual, publication 20HIM-UM001.

The event queue can contain up to 32 entries, which are stored in an EEPROM chip—making the event queue nonvolatile. Eventually the event queue will become full, since its contents are retained through option module power cycles and resets. At that point, a new entry replaces the oldest entry. Only an event queue clear operation or the corruption of the EEPROM group containing the event queue will clear the event queue contents. In the latter case, the option module will not generate a fault to indicate that the event queue was corrupted.

Resetting the option module to defaults has no effect on the event queue, other than to log a Code 58 'Module Defaulted' event.

Many events in the event queue occur under normal operation. If you encounter unexpected communications problems, the events may help you or Allen-Bradley personnel troubleshoot the problem. The following events may appear in the event queue.

Table 7 - Option Module Events

Code	Event Text	Description
Option Module Events		
1	No Event	Text displayed in an empty event queue entry.
2	Device Power Up	Power was applied to the option module.
3	Device Reset	The option module was reset.
4	EEPROM CRC Error	The EEPROM checksum/CRC is incorrect, which limits option module functionality. Default parameter values must be loaded to clear this condition.
5	App Updated	The option module application firmware was updated.
6	Boot Updated	The option module boot firmware was updated.
7	Watchdog Timeout	The software watchdog detected a failure and reset the module.
DPI Events		
8	DPI Bus Off	A bus-off condition was detected on DPI.
9	DPI Ping Timeout	A ping message was not received on DPI within the specified time.
10	DPI Port Invalid	The option module was not connected to a valid port on a DPI product.
11	DPI Port Changed	The DPI port changed after startup.
12	DPI Host Reset	The drive sent a reset event message.
13	DPI Baud 125kbps	The option module detected that the drive was communicating at 125 Kbps.
14	DPI Baud 500kbps	The option module detected that the drive was communicating at 500 Kbps.
15	DPI Host Invalid	The option module was connected to an incompatible product.
16	DPI Dup Port	Another peripheral with the same port number is already in use.
17	DPI Type 0 Logon	The option module has logged in for Type 0 control.
18	DPI Type 0 Time	The option module has not received a Type 0 status message within the specified time.
19	DPI DL Logon	The option module has logged into a Datalink.
20	DPI DL Error	The drive rejected an attempt to log in to a Datalink because the Datalink is not supported or is used by another peripheral.
21	DPI DL Time	The option module has not received a Datalink message within the specified time.
22	DPI Ctrl Disable	The option module has sent a 'Soft Control Disable' command to the drive.
23	DPI Ctrl Enable	The option module has sent a 'Soft Control Enable' command to the drive.
24	DPI Msg Timeout	A Client-Server message sent by the option module was not completed within 1 second.
25	DPI Manual Reset	The option module was reset by changing its Reset Module parameter.
SI Events		
26	SI Online	The option module has logged into the Serial Interface Communications.
27	SI Logon Error	The option module failed to log into the Serial Interface.
28	SI Comm Fault	The Serial Interface Communications has faulted.
Network Events		
29	Net Link Up	A network link was available for the Option Module.
30	Net Link Down	The network link was removed from the Option Module.
31	Net Dup Address	The option module uses the same address as another device on the network.
32	Net Comm Fault	The option module detected a communications fault on the network.
33	Net Sent Reset	The option module received a reset from the network.

Table 7 - Option Module Events (Continued)

Code	Event Text	Description
34	Net IO Close	An I/O connection from the network to the option module was closed.
35	Net Idle Fault	The option module detected an idle fault condition on the network (leader in programming mode or follower parameterization in progress).
36	Net IO Open	An I/O connection from the network to the option module has been opened.
37	Net IO Timeout	An I/O connection from the network to the option module has timed out.
38	Net IO Size Err	The option module received an incorrectly sized I/O packet.
39-56	Reserved	—
57	Option Card Flt	Internal option module faults.
58	Module Defaulted	The option module has been set to defaults.
59	Net Freeze	Freeze command has been issued by the PROFIBUS leader for this option module.
60	Net Unfreeze	Unfreeze command has been issued by the PROFIBUS leader for this option module.
61	Net Sync	Sync command has been issued by the PROFIBUS leader for this option module.
62	Net Unsync	Unsync command has been issued by the PROFIBUS leader for this option module.
63	Net Clear Cmd	The option module received a PROFIBUS 'Clear Command' from the network leader.
64	Net Set Prm	The option module received a PROFIBUS 'Set Parameters' command from the network leader.
65	Net WD Timeout	The PROFIBUS ASIC has declared a network timeout.

Specifications

This appendix presents the specifications for the option module.

Topic	Page
Communications	55
Electrical	55
Mechanical	55
Environmental	56
Regulatory Compliance	56

Communications

Network	
Protocol	PROFIBUS
Data Rates	9.6K, 19.2K, 45.45K, 93.75K, 187.5K, 500K, 1.5M, 3M, 6M, and 12M. The Option Module has auto baud rate detection.
Media	PROFIBUS Cable with DB9 connector
Drive	
Protocol	DPI
Data Rates	500k

Electrical

Consumption	
Drive	250 mA at 14 VDC supplied by the host drive
Network	None

Mechanical

Dimensions	
Height	15.76mm (0.62 inches)
Length	130 mm (5.12 inches)
Width	83 mm (3.27 inches)
Weight	57 g (2 oz.)

Environmental

Temperature Operating Storage	 -5...65 °C (30...149 °F) -40...85 °C (-40...185 °F)
Relative Humidity Operating Non-Operating	 5...80% non condensing 5...95% non condensing
Shock (Operating)	15 g peak acceleration
Vibration Operating Non-Operating	 2.0 g at 55...512 Hz 5 g at 5 Hz...2 kHz
Atmosphere	**Important**: The option module **must not** be installed in an area where the ambient atmosphere contains volatile or corrosive gas, vapors or dust. If the option module is not going to be installed for a period of time, it must be stored in an area where it will not be exposed to a corrosive atmosphere.

Regulatory Compliance

Certification	Specification
UL	UL508C
CE	IEC50178 and IEC61800-3
cUL	CAN/ CSA C22.2 No.14-M91
CTick	EN61800-3

This is a product of category C2 according to IEC 61800-3. In a domestic environment this product may cause radio interference in which case supplementary mitigation measures may be required.

Option Module Parameters

This appendix provides information about the option module parameters.

Topic	Page
Parameter Types	57
About Parameter Numbers	57
How Parameters Are Organized	58
Device Parameters	58
Host Parameters	60

Parameter Types

The option module has two types of parameters:

- *Device* parameters are used to configure the option module to operate on the network.
- *Host* parameters are used to configure the option module Datalink transfer and various fault actions with the drive.

You can view option module *Device* parameters and *Host* parameters with any of the following drive configuration tools:

- PowerFlex 20-HIM-A6 or 20-HIM-C6S HIM—use the 4 ◄ or ► 6 key to scroll to the drive port in which the module resides, press the (Folders) key, and use the 4 ◄ or ► 6 key to scroll to the DEV PARAM or HOST PARAM folder.
- Connected Components Workbench software—click the tab for the option module at the bottom of the window, click the Parameters icon in the tool bar, and click the *Device* or *Host* Parameters tab.
- DriveExplorer software—find the option module in the treeview and open its Parameters folder.
- DriveExecutive software—find the option module in the treeview, expand the module in the tree, and open its Parameters folder.

About Parameter Numbers

Each parameter set is numbered consecutively.

Configuration Tool	Numbering Scheme
• HIM • Connected Components Workbench software • DriveExplorer software • DriveExecutive software	The *Device* parameters and *Host* parameters begin with parameter 01. For example, *Device* **Parameter 01 - [DPI Port]** and *Host* **Parameter 01 - [Net to Drv DL 01]** are Parameter 1 as indicated by this manual.
• Acyclic Messaging	See Chapter 6, Acyclic Messaging.

How Parameters Are Organized

The *Device* Parameters and *Host* Parameters are separately displayed in a **Numbered List** view order.

Device Parameters

Table 8 - Device Parameters

No.	Name and Description	Details	
01	**[Port Number]** Displays the drive port into which the option module is installed. Typically, this will be Port 4, 5, or 6.	Minimum: Maximum: Type:	0 7 Read Only
02	**[DLs From Net Act]** Displays the number of controller-to-drive Datalinks that the drive is using based on the I/O connection opened by the controller.	Minimum: Maximum: Type:	0 16 Read Only
03	**[DLs To Net Act]** Displays the number of drive-to-controller Datalinks that the controller is using based on the I/O connection opened by the controller.	Minimum: Maximum: Type:	0 16 Read Only
04	**[Net Addr Src]** Displays the source from which the option module's node address is taken. This will be the Node Address switches (see Figure 1 on page 20 and Table 1 on page 21), or the value of *Device* **Parameter 05 - [Net Addr Cfg]**.	Values: Type:	0 = Switches 1 = Parameters Read Only
05	**[Net Addr Cfg]** Sets the network node address for the option module if *Device* **Parameter 04 - [Net Addr Src]** is set to '1' (Parameters).	Default: Minimum: Maximum: Type:	126 0 126 Read/Write
06	**[Net Addr Act]** Displays the actual network node address used by the option module.	Minimum: Maximum: Type:	0 126 Read Only
07	**[Reset Module]** No action if set to '0' (Ready). Resets the option module if set to '1' (Reset Module). Restores the option module to its factory default settings if set to '2' (Set Defaults). This parameter is a command. It will be reset to '0' (Ready) after the command has been performed. When performing a Set Defaults, the drive may detect a conflict. If this occurs, the drive will not allow a Set Defaults action. You must resolve the conflict before attempting a Set Defaults action for the option module.	Default: Values: Type: Reset Required:	0 = Ready 0 = Ready 1 = Reset Module 2 = Set Defaults Read/Write No
	ATTENTION: Risk of injury or equipment damage exists. If the option module is transmitting I/O that controls the drive, the drive may fault when you reset the option module. Determine how your drive will respond before resetting the option module.		
08	**[Net Data Format]** Displays the byte alignment for the network data as selected with the Byte Swap switch 8 (see Figure 1 on page 20).	Default: Values: Type:	0 = Ltl Endian 0 = Ltl Endian 1 = Big Endian Read Only

Table 8 - Device Parameters (Continued)

No.	Name and Description	Details	
09	**[PROFIBUS Mode]** Displays the PROFIBUS operation mode selected by the user using the mode selection jumper (see page 11). This will be either Normal or PROFIdrive. **Important:** PROFIdrive is not supported in this version. It is reserved for future firmware update.	Values: Type:	0 = Normal 1 = PROFIdrive Read Only
10	**[PROFIBUS Alarms]** Enables or disables generation of alarms on PROFIBUS.	Default: Values: Type:	0 = Enable 0 = Enable 1 = Disable Read/Write
11	**[DPV1 Map Mode]** Enables S7 Controller compatibility.	Default: Values: Type:	0 = Standard 0 = Standard 1 = S7 Comp Read/Write

Host Parameters

Table 9 - Host Parameters

No	Name & Description	Details
01 02 03 04 05 06 07 08 09 10 11 12 13 14 15 16	[DL From Net 01] [DL From Net 02] [DL From Net 03] [DL From Net 04] [DL From Net 05] [DL From Net 06] [DL From Net 07] [DL From Net 08] [DL From Net 09] [DL From Net 10] [DL From Net 11] [DL From Net 12] [DL From Net 13] [DL From Net 14] [DL From Net 15] [DL From Net 16] Sets the port number and parameter number to which the selected Datalinks should connect. Each selected port/parameter will be written with data received from the network. These are parameters written by the controller (outputs from the controller). If setting the value manually, the parameter value = (10000 * port number) + (destination parameter number). For example, suppose you want to use *Host* **Parameter 01 [DL From Net 01]** to write to Parameter 01 of an optional encoder module plugged into drive Port 5. The value for *Host* **Parameter 01 [DL From Net 01]** would be 50001 [(10000 * 5) +1].	Default: 0 Default: 0 Default: 0 Default: 0 Default: 0 Default: 0 Default: 0 Default: 0 Default: 0 Default: 0 Default: 0 Default: 0 Default: 0 Default: 0 Minimum: 0 Maximum: 159999 Type: Read/Write Reset Required: No
17 18 19 20 21 22 23 24 25 26 27 28 29 30 31 32	[DL To Net 01] [DL To Net 02] [DL To Net 03] [DL To Net 04] [DL To Net 05] [DL To Net 06] [DL To Net 07] [DL To Net 08] [DL To Net 09] [DL To Net 10] [DL To Net 11] [DL To Net 12] [DL To Net 13] [DL To Net 14] [DL To Net 15] [DL To Net 16] Sets the port number and parameter number to which the selected Datalinks should connect. Each selected port/parameter will be read and their values transmitted over the network to the controller. These are parameters read by the controller (inputs to the controller). If setting the value manually, the parameter value = (10000 * port number) + (origination parameter number). For example, suppose you want to use *Host* **Parameter 17 [DL To Net 01]** to read Parameter 02 of an optional I/O module plugged into drive Port 6. The value for *Host* **Parameter 17 [DL To Net 01]** would be 60002 [(10000 * 6) + 2].	Default: 0 Default: 0 Default: 0 Default: 0 Default: 0 Default: 0 Default: 0 Default: 0 Default: 0 Default: 0 Default: 0 Default: 0 Default: 0 Default: 0 Minimum: 0 Maximum: 159999 Type: Read/Write Reset Required: No

Table 9 - Host Parameters (Continued)

No	Name & Description	Details	
33	**[Comm Flt Action]** Sets the action that the option module and drive will take if the option module detects that I/O communication has been disrupted. This setting is effective only if I/O that controls the drive is transmitted through the option module. When communication is re-established, the drive will automatically receive commands over the network again.	Default: Values: Type: Reset Required:	0 = Fault 0 = Fault 1 = Stop 2 = Zero Data 3 = Hold Last 4 = Send Flt Cfg Read/Write No
34	**[Idle Flt Action]** Sets the action that the option module and drive will take if the option module detects that the controller is in program mode or faulted. This setting is effective only if I/O that controls the drive is transmitted through the option module. When the controller is put back in Run mode, the drive will automatically receive commands over the network again.	Default: Values: Type: Reset Required:	0 = Fault 0 = Fault 1 = Stop 2 = Zero Data 3 = Hold Last 4 = Send Flt Cfg Read/Write No
35	**[Peer Flt Action]** This parameter is functional. However, since the option module does not support peer I/O, any entered value is not used.	Reserved	
36	**[Msg Flt Action]** The option module does not support this functionality. Any entered value is not used.	Reserved	

ATTENTION: Risk of injury or equipment damage exists. *Host* **Parameter 33 - [Comm Flt Action]** lets you determine the action of the option module and connected drive if I/O communication is disrupted. By default, this parameter faults the drive. You may configure this parameter so that the drive continues to run, however, precautions should be taken to verify that the setting of this parameter does not create a risk of injury or equipment damage. When commissioning the drive, verify that your system responds correctly to various situations (for example, a disconnected cable).

Table 9 - Host Parameters (Continued)

No	Name & Description	Details	
37	**[Flt Cfg Logic]** Sets the Logic Command data that is sent to the drive if any of the following is true: • *Host* **Parameter 33 - [Comm Flt Action]** is set to '4' (Send Flt Cfg) and I/O communication is disrupted. • *Host* **Parameter 34 - [Idle Flt Action]** is set to '4' (Send Flt Cfg) and the controller is idle. **Important:** The bit definitions in the Logic Command word for PowerFlex 750-Series drives are shown in Appendix C.	Default: Minimum: Maximum: Type: Reset Required:	0000 0000 0000 0000 0000 0000 0000 0000 0000 0000 0000 0000 0000 0000 0000 0000 1111 1111 1111 1111 1111 1111 1111 1111 Read/Write No
38	**[Flt Cfg Ref]** Sets the Reference data that is sent to the drive if any of the following is true: • *Host* **Parameter 33 - [Comm Flt Action]** is set to '4' (Send Flt Cfg) and I/O communication is disrupted. • *Host* **Parameter 34 - [Idle Flt Action]** is set to '4' (Send Flt Cfg) and the controller is idle.	Default: Minimum: Maximum: Type: Reset Required:	0 -3.40282×10^{38} 3.40282×10^{38} Read/Write No
39 40 41 42 43 44 45 46 47 48 49 50 51 52 53 54	**[Flt Cfg DL 01]** **[Flt Cfg DL 02]** **[Flt Cfg DL 03]** **[Flt Cfg DL 04]** **[Flt Cfg DL 05]** **[Flt Cfg DL 06]** **[Flt Cfg DL 07]** **[Flt Cfg DL 08]** **[Flt Cfg DL 09]** **[Flt Cfg DL 10]** **[Flt Cfg DL 11]** **[Flt Cfg DL 12]** **[Flt Cfg DL 13]** **[Flt Cfg DL 14]** **[Flt Cfg DL 15]** **[Flt Cfg DL 16]** Sets the data that is sent to the Datalink in the drive if any of the following is true: • *Host* **Parameter 33 - [Comm Flt Action]** is set to '4' (Send Flt Cfg) and I/O communication is disrupted. • *Host* **Parameter 34 - [Idle Flt Action]** is set to '4' (Send Flt Cfg) and the controller is idle.	Default: Default: Default: Default: Default: Default: Default: Default: Default: Default: Default: Default: Default: Default: Default: Default: Default: Minimum: Maximum: Type: Reset Required:	0 0 0 0 0 0 0 0 0 0 0 0 0 0 0 0 0 0 4294967295 Read/Write No

Logic Command/Status Words: PowerFlex 750-Series Products

This appendix presents the definitions of the Logic Command and Logic Status words that are used for PowerFlex® 750-Series products.

Drive Products

Here are the logic command and logic status words for PowerFlex 755TM common-bus inverters, PowerFlex 755TR drives, and PowerFlex 755TL drives.

Logic Command Word

Table 10 - Logic Command Word

Logic Bit	Command	Description	
		753/755	755T
0	Normal Stop	0 = Not Normal Stop 1 = Normal Stop	
1	Start (1)	0 = Not Start 1 = Start	
2	Jog 1 (2)	0 = Not Jog 1 1 = Jog 1 (speed set in 0:556)	0 = Not Jog 1 1 = Jog 1 (speed set in 10/11:1894)
3	Clear Fault (3)	0 = Not Clear Fault 1 = Clear Fault	
4, 5	Unipolar Direction	00 = No Command 01 = Forward Command 10 = Reverse Command 11 = Hold Direction Control	
6	Manual	0 = Not Manual 1 = Manual	
7	Reserved		
8,9	Accel Time	00 = No Command 01 = Use Accel Time 1 (0:535) 10 = Use Accel Time 2 (0:536) 11 = Use Present Time	00 = No Command 01 = Use Accel Time 1 (10/11:1915) 10 = Use Accel Time 2 (10/11:1916) 11 = Use Present Time
10,11	Decel Time	00 = No Command 01 = Use Decel Time 1 (0:537) 10 = Use Decel Time 2 (0:538) 11 = Use Present Time	00 = No Command 01 = Use Decel 1 (10/11:1917) 10 = Use Decel 2 (10/11:1918) 11 = Use Present Time
12 13 14	Ref Select	000 = No Command 001 = Ref A Select (0:545) 010 = Ref B Select (0:550) 011 = Preset Speed 3 (0:573) 100 = Preset Speed 4 (0:574) 101 = Preset Speed 5 (0:545) 110 = Preset Speed 6 (0:546) 111 = Preset Speed 7 (0:577)	000 = No Command 001 = Ref A Select (10/11:1800) 010 = Ref B Select (10/11:1807) 011 = Preset Speed 3 (10/11:1816) 100 = Preset Speed 4 (10/11:1817) 101 = Preset Speed 5 (10/11:1818) 110 = Preset Speed 6 (10/11:1819) 111 = Preset Speed 7 (10/11:1820)
15	Emerg OVRD	0 = Not Emergency Override 1 = Emergency Override	

Table 10 - Logic Command Word (Continued)

Logic Bit	Command	Description	
		753/755	755T
16	Coast Stop	0 = Not Coast to Stop 1 = Coast to Stop	
17	Current Limit Stop	0 = Not Current Limit Stop 1 = Current Limit Stop	
18	Run (4)	0 = Not Run 1 = Run	
19	Jog 2 (2)	0 = Not Jog 2 1 = Jog 2 (speed set in 0:557)	0 = Not Jog 2 1 = Jog 2 (speed set in 10/11:1895)
20	Reserved		
21	Energy Pause	0 = Energy Resume	0 = Energy Resume 1 = Energy Pause(5)
22...31	Reserved		

(1) A Not Stop condition (logic bit 0 = 0) must first be present before a 1 = Start condition will start the drive.
(2) A Not Stop condition (logic bit 0 = 0) must first be present before a 1 = Jog 1/Jog 2 condition will jog the drive. A transition to a '0' will stop the drive.
(3) To perform this command, the value must switch from '0' to '1'.
(4) A Not Stop condition (logic bit 0 = 0) must first be present before a 1 = Run condition will run the drive. A transition to a '0' will stop the drive.
(5) Bit 1, Energy Pause, available on PowerFlex 755T products only.

Logic Status Word

Table 11 - Logic Status Word

Logic Bit	Command	Description	
		753/755	755T
0	Run Ready	0 = Not Ready to Run 1 = Ready to Run	
1	Active	0 = Not Active 1 = Active	
2	Command Direction	0 = Reverse 1 = Forward	
3	Actual Direction	0 = Reverse 1 = Forward	
4	Accelerating	0 = Not Accelerating 1 = Accelerating	
5	Decelerating	0 = Not Decelerating 1 = Decelerating	
6	Alarm	0 = No Alarm 1 = Alarm(0:959 and 0:960)	0 = No Alarm 1 = Alarm (10/11:465...10/11:467)
7	Fault	0 = No Fault 1 = Fault (0: 952 and 0:953)	0 = No Fault 1 = Fault (10/11:461 and 10/11:462)
8	At Setpt Spd	0 = Not at Setpoint Speed 1 = At Setpoint Speed	
9	Manual	0 = Manual Mode Not Active 1 = Manual Mode Active	

Table 11 - Logic Status Word (Continued)

Logic Bit	Command	Description	
		753/755	755T
10 11 12 13 14	Spd Ref ID	00000 = Reserved 00001 = Auto Ref A (0:545) 00010 = Auto Ref B (0:550) 00011 = Auto Preset Speed 3 (0:573) 00100 = Auto Preset Speed 4 (0:574) 00101 = Auto Preset Speed 5 (0:575) 00110 = Auto Preset Speed 6 (0:576) 00111 = Auto Preset Speed 7 (0:577) 01000 = Reserved 01001 = Reserved 01010 = Reserved 01011 = Reserved 01100 = Reserved 01101 = Reserved 01110 = Reserved 01111 = Reserved 10000 = Man Port 0 10001 = Man Port 1 10010 = Man Port 2 10011 = Man Port 3 10100 = Man Port 4 10101 = Man Port 5 10110 = Man Port 6 10111 = Reserved 11000 = Reserved 11001 = Reserved 11010 = Reserved 11011 = Reserved 11100 = Reserved 11101 = Man Port 13 (embedded ENET) (0:877) 11110 = Man Port 14 (DriveLogix™) (0:878) 11111 = Alternate Man Ref Sel (0:328)	00000 = Reserved 00001 = Auto Ref A (10/11:1800) 00010 = Auto Ref B (10/11:1807) 00011 = Auto Preset Speed 3 (10/11:1816) 00100 = Auto Preset Speed 4 (10/11:1817) 00101 = Auto Preset Speed 5 (10/11:1818) 00110 = Auto Preset Speed 6 (10/11:1819) 00111 = Auto Preset Speed 7 (10/11:1820) 01000 = Reserved 01001 = Reserved 01010 = Reserved 01011 = Reserved 01100 = Reserved 01101 = Reserved 01110 = Reserved 01111 = Reserved 10000 = Man Port 0 10001 = Man Port 1 10010 = Man Port 2 10011 = Man Port 3 10100 = Man Port 4 10101 = Man Port 5 10110 = Man Port 6 10111 = Reserved 11000 = Reserved 11001 = Reserved 11010 = Reserved 11011 = Reserved 11100 = Reserved 11101 = Man Port 13 (embedded ENET)(0:211) 11110 = Reserved 11111 = Alternate Man Ref Sel (10/11:1835)
15	Emerg OVRD	0 = No Command 1 = Emergency Override	
16	Running	0 = Not Running 1 = Running	
17	Jogging	0 = Not Jogging 1 = Jogging (0:556 and 0:557)	0 = Not Jogging 1 = Jogging (10/11:894 and 10/11:895)
18	Stopping	0 = Not Stopping 1 = Stopping	
19	DC Brake	0 = Not DC Brake 1 = DC Brake	
20	DB Active	0 = Not Dynamic Brake Active 1 = Dynamic Brake Active	
21	Speed Mode	0 = Not Speed Mode 1 = Speed Mode (0:309)	0 = Not Speed Mode 1 = Speed Mode (10/11:30)
22	Position Mode	0 = Not Position Mode 1 = Position Mode (0:309)	0 = Not Position Mode 1 = Position Mode (10/11:30)
23	Torque Mode	0 = Not Torque Mode 1 = Torque Mode (0:309)	0 = Not Torque Mode 1 = Torque Mode (10/11:30)
24	At Zero Speed	0 = Not at Zero Speed 1 =At Zero Speed	
25	At Home	0 = Not at Home 1 = At Home	
26	At Limit	0 = Not at Limit 1 = At Limit	
27	Current Limit	0 = Not at Current Limit 1 = At Current Limit	
28	Bus Freq Reg	0 = Not Bus Freq Reg 1 = Bus Freq Reg	

Table 11 - Logic Status Word (Continued)

Logic Bit	Command	Description	
		753/755	755T
29	Enable On	0 = Not Enable On 1 = Enable On	
30	Motor Overload	0 = Not Motor Overload 1 = Motor Overload	
31	Regen	0 = Not Regen 1= Regen	

Bus Supply Products

Here are the logic command and logic status words for PowerFlex 755TM bus supplies.

Logic Command Word

Table 12 - Logic Command Word, PowerFlex 755TM Bus Supplies

Logic Bit	Command	Description
0	Normal Stop	0 = Not Normal Stop 1 = Normal Stop
1	Start(1)	0 = Not Start 1 = Start
2	Reserved	
3	Clear Faults (2)	0 = Not Clear Faults 1 = Clear Faults
4...17	Reserved	
18	Run(3)	0 = Not Run 1 = Run
19...31	Reserved	

(1) A Not Stop condition (logic bit 0 = 0) must first be present before a 1 = Start condition starts the bus supply modulation.
(2) To perform this command, the value must switch from '0' to '1'.
(3) A Not Stop condition (logic bit 0 = 0) must first be present before a 1 = Run condition runs the bus supply modulation. A transition to a '0' stops the modulation.

Logic Status Word

Table 13 - Logic Status Word, PowerFlex 755TM Bus Supplies

Logic Bit	Status	Description
0	Ready	0 = Not Ready to Run 1 = Ready to Run
1	Reserved	
2	Auto Restart Active	0 = Auto Restart not active 1 = Auto Restart active
3	Auto Restart Countdown	0 = Auto Restart not counting downtime 1 = Auto Restart counting downtime before attempting restart
4	Heatsink Fan On	0 = Heatsink fan off 1 = Heatsink fan on
5	Autotuning	0 = Autotune not active 1 = Autotune active

Table 13 - Logic Status Word, PowerFlex 755TM Bus Supplies (Continued)

6	Alarm	0 = No Alarm 1 = Alarm
7	Fault	0 = No Fault 1 = Fault
8	At DC Reference	0 = DC Bus voltage not within 1% of reference 1 = DC Bus voltage within 1% of reference
9...14	Reserved	
15	Start Inhibit	0 = No condition inhibiting start 1 = Condition is inhibiting start
16	Running	0 = Line-side converter not modulating 1 = Line-side converter modulating
17...20	Reserved	
21	AC Ridethrough	0 = Not riding through a power disturbance 1 = Riding through a power disturbance
22	Input Phase Loss	0 = Input phase loss is not occurring 1 = Input phase loss is occurring
23	AC Line Synchronized	0 = Line-side converter that is not synchronized with incoming power frequency and phase 1 = Line-side converter that is synchronized with incoming power frequency and phase
24	kVAR Only Active	0 = Line-side converter not commanding only reactive current 1 = Line-side converter commanding only reactive current
25	In Precharge	0 = Not executing a precharge 1 = Executing a precharge
26	At Limit	0 = Output is not being limited 1 = Output is being limited (13/14:226).
27	Cur Limit	0 = Current is not being limited 1 = Current is being limited
28	Converter Bus Regulating	0 = Not actively regulating DC Bus voltage 1 = Actively regulating DC Bus voltage
29	Enable On	0 = Converter is not being enabled by digital input 1 = Digital input is configured to enable the line-side converter, and the digital input is set
30	Motoring	0 = Not modulating to draw power from AC line 1 = Modulating to draw power from AC line
31	Regenerating	0 = Not modulating to send power to AC line 1 = Modulating to send power to AC line

Notes:

History of Changes

This appendix contains the new or updated information for each revision of this publication. These lists include substantive updates only and are not intended to reflect all changes.

750COM-UM004B-EN-P, September 2012

Change
Added information about the Connected Components Workbench software tool.
Added Important statement about the larger T15 Torx head mounting screw to step 3 in the Quick Start table
Updated option module mounting information in the section 'Connecting Option Module to the Drive'. The larger T15 Torx head screw, if present, on a module in the adjacent port the left of the 20-750-PBUS module must be replaced with a smaller, spare T8 Torx head screw to prevent possible electrical contact.

Notes:

Rockwell Automation Support

Use these resources to access support information.

Technical Support Center	Find help with how-to videos, FAQs, chat, user forums, and product notification updates.	rok.auto/support
Knowledgebase	Access Knowledgebase articles.	rok.auto/knowledgebase
Local Technical Support Phone Numbers	Locate the telephone number for your country.	rok.auto/phonesupport
Literature Library	Find installation instructions, manuals, brochures, and technical data publications.	rok.auto/literature
Product Compatibility and Download Center (PCDC)	Download firmware, associated files (such as AOP, EDS, and DTM), and access product release notes.	rok.auto/pcdc

Documentation Feedback

Your comments help us serve your documentation needs better. If you have any suggestions on how to improve our content, complete the form at rok.auto/docfeedback.

Waste Electrical and Electronic Equipment (WEEE)

At the end of life, this equipment should be collected separately from any unsorted municipal waste.

Rockwell Automation maintains current product environmental information on its website at rok.auto/pec.

Allen-Bradley, Connected Components Workbench, ControlFLASH, ControlFLASH Plus, DeviceLogix, DPI, DriveLogix, DriveExecutive, DriveExplorer, DriveTools, expanding human possibility, FactoryTalk, IntelliCENTER, PowerFlex, Rockwell Automation, Rockwell Software, RSLogix, RSLogix 5000, RSNetWorx, Studio 5000 Logix Designer, and TotalFORCE are trademarks of Rockwell Automation, Inc.

EtherNet/IP is a trademark of ODVA, Inc.

Trademarks not belonging to Rockwell Automation are property of their respective companies.

Rockwell Otomasyon Ticaret A.Ş. Kar Plaza İş Merkezi E Blok Kat:6 34752, İçerenköy, İstanbul, Tel: +90 (216) 5698400 EEE YÖnetmeliğine Uygundur

Connect with us.

rockwellautomation.com — expanding **human possibility**™

AMERICAS: Rockwell Automation, 1201 South Second Street, Milwaukee, WI 53204-2496 USA, Tel: (1) 414.382.2000, Fax: (1) 414.382.4444
EUROPE/MIDDLE EAST/AFRICA: Rockwell Automation NV, Pegasus Park, De Kleetlaan 12a, 1831 Diegem, Belgium, Tel: (32) 2 663 0600, Fax: (32) 2 663 0640
ASIA PACIFIC: Rockwell Automation, Level 14, Core F, Cyberport 3, 100 Cyberport Road, Hong Kong, Tel: (852) 2887 4788, Fax: (852) 2508 1846

Publication 750COM-UM004C-EN-P - December 2020
Supersedes Publication 750COM-UM004B-EN-P - September 2012

Copyright © 2020 Rockwell Automation, Inc. All rights reserved. Printed in the U.S.A.