PowerFlex 7000 Medium Voltage AC Drive Liquid-Cooled ('C' Frame)—ForGe Control

Bulletin Number 7000L

Allen-Bradley
by ROCKWELL AUTOMATION

User Manual

Original Instructions

Important User Information

Read this document and the documents listed in the additional resources section about installation, configuration, and operation of this equipment before you install, configure, operate, or maintain this product. Users are required to familiarize themselves with installation and wiring instructions in addition to requirements of all applicable codes, laws, and standards.

Activities including installation, adjustments, putting into service, use, assembly, disassembly, and maintenance are required to be carried out by suitably trained personnel in accordance with applicable code of practice.

If this equipment is used in a manner not specified by the manufacturer, the protection provided by the equipment may be impaired.

In no event will Rockwell Automation, Inc. be responsible or liable for indirect or consequential damages resulting from the use or application of this equipment.

The examples and diagrams in this manual are included solely for illustrative purposes. Because of the many variables and requirements associated with any particular installation, Rockwell Automation, Inc. cannot assume responsibility or liability for actual use based on the examples and diagrams.

No patent liability is assumed by Rockwell Automation, Inc. with respect to use of information, circuits, equipment, or software described in this manual.

Reproduction of the contents of this manual, in whole or in part, without written permission of Rockwell Automation, Inc., is prohibited.

Throughout this manual, when necessary, we use notes to make you aware of safety considerations.

WARNING: Identifies information about practices or circumstances that can cause an explosion in a hazardous environment, which may lead to personal injury or death, property damage, or economic loss.

ATTENTION: Identifies information about practices or circumstances that can lead to personal injury or death, property damage, or economic loss. Attentions help you identify a hazard, avoid a hazard, and recognize the consequence.

IMPORTANT Identifies information that is critical for successful application and understanding of the product.

These labels may also be on or inside the equipment to provide specific precautions.

SHOCK HAZARD: Labels may be on or inside the equipment, for example, a drive or motor, to alert people that dangerous voltage may be present.

BURN HAZARD: Labels may be on or inside the equipment, for example, a drive or motor, to alert people that surfaces may reach dangerous temperatures.

ARC FLASH HAZARD: Labels may be on or inside the equipment, for example, a motor control center, to alert people to potential Arc Flash. Arc Flash will cause severe injury or death. Wear proper Personal Protective Equipment (PPE). Follow ALL Regulatory requirements for safe work practices and for Personal Protective Equipment (PPE).

The following icon may appear in the text of this document.

Identifies information that is useful and can help to make a process easier to do or easier to understand.

Preface

Overview of Drive

Chapter 1

Drive Installation

Chapter 2

Chapter 3

Power Component Definition and Maintenance

Chapter 4

Control Component Definition and Maintenance

Appendix A

Preventative Maintenance Schedule

Appendix B

PowerFlex 7000 Drive Spare Part Storage Requirements and Recommendations

Appendix C

Torque Requirements

Appendix D

Insulation Resistance Test

Appendix E

Environmental Considerations

Appendix F

History of Changes

Summary of Changes

This publication contains the following new or updated information. This list includes substantive updates only and is not intended to reflect all changes.

Topic	Page
Added warning around energizing isolation transformers	10
Added QR codes for commissioning support	11
Added information on filter capacitor mounting plate with assembly instructions	91
Updated capacitor replacement procedure to include mounting plate instruction	92
Added graphic showing new chill block design	110
Added Self-Powered SCR Power Supply (SCR SPGDB) to the preventative maintenance schedule	192

About This Publication

This document provides procedural information for managing daily or recurring tasks involving the PowerFlex® 7000 medium voltage 'C' frame drives.

Download Firmware, AOP, EDS, and Other Files

Download firmware, associated files (such as AOP, EDS, and DTM), and access product release notes from the Product Compatibility and Download Center at rok.auto/pcdc.

Who Should Use This Manual

This manual is intended for use by personnel familiar with medium voltage and solid-state variable speed drive equipment. The manual contains material that enables regular operation and maintenance of the drive system.

What Is Not in This Manual

This manual provides information specific to the maintenance of the PowerFlex® 7000 'A' frame drive. The manual excludes topics such as:

- Dimensional and electrical drawings that are generated for each customer order.
- Spare part lists compiled for each customer order.
- Human Machine Interface (HMI) operation and configuration.

Rockwell Automation provides the site- and installation-specific electrical and design information for each drive during the order process cycle. If they are not available on site with the drive, contact Rockwell Automation®.

If you have multiple drive types or power ranges, ensure you have the correct documentation for each specific PowerFlex 7000 product:

- 'A' frame for lower-power air-cooled, configurations (up to approximately
  1250 hp/933 kW)
- 'B' frame for higher-power, air-cooled configurations (standard or heatpipe models)
- 'C' frame for all liquid-cooled configurations

General Precautions

ATTENTION: This drive contains ESD (electrostatic discharge) sensitive parts and assemblies. Static control precautions are required when installing, testing, servicing or repairing this assembly. Component damage may result if ESD control procedures are not followed. If you are not familiar with static control procedures, reference Allen-Bradley publication 8000-4.5.2, "Guarding Against Electrostatic Damage" or any other applicable ESD protection handbook.

ATTENTION: An incorrectly applied or installed drive can result in component damage or a reduction in product life. Wiring or application errors, such as, undersizing the motor, incorrect or inadequate AC supply, or excessive ambient temperatures may result in malfunction of the system.

ATTENTION: Only personnel familiar with the PowerFlex 7000 Variable Frequency Drive (VFD) or Adjustable Speed Drive (ASD) and associated machinery should plan or implement the installation, startup, and subsequent maintenance of the system. Failure to comply may result in personal injury and/or equipment damage.

ATTENTION: It is not recommended to repeatedly energize transformers. Transformer energization results in high inrush current (10...15 times the rated transformer current). Energizing a transformer multiple times in a short period of time, may subject the transformer windings and winding insulation to destructive thermal and electromechanical stress, due to the repetitive high inrush current. This energization limitation is similar to limiting the number of motor starts per hour to reduce thermal stress on a motor. The typical inrush current for a motor is much lower (six times the motor full-load current) making the energization limitation for an isolation transformer even more important.
For applications where the motor must be started frequently, PowerFlex medium voltage drives should be left in the 'Drive Ready' mode. The input contactor/breaker remains closed in this mode (that is, medium voltage remains present on the transformer) and the drive will start, run, and stop the motor when required, without the need to energize and deenergize the drive isolation transformer.

ATTENTION: To keep arc resistant structural integrity, if applicable, the following rules must be followed:

- The pressure relief vent may not be tampered with, and it is not to be used as a step.
- No unapproved alterations can be made to the enclosure.
- All covers, plates, and hardware removed for installation or maintenance purposes must be re-installed and properly secured. Failure to do so voids the arc resistant structural integrity.
- Power cable entry points are to be treated as the boundary to a hazardous location and must be sealed accordingly. Failure to do so voids the arc resistant structural integrity.
- All wiring between the low voltage panel and the power cell must be routed through a suitable cable gland to ensure flames and gases are not transmitted into this area (as fitted from factory).
- The medium voltage doors must be properly secured using the handle mechanism (if provided), the key interlock (if provided), and the door bolts. Failure to do so voids the arc resistant structural integrity.

Connect to Service and Support and Product Documentation

Global Customer Care

Technical Documents

Scan the left QR code to get connected to your Regional Customer Care Group.

Scan the right QR code to get connected to the PowerFlex 7000L Medium Voltage Drive product page, where you can access user manuals, technical specifications, firmware manuals, and more.

Abbreviations

This table contains abbreviations used throughout this document.

Table 1 - Abbreviations

Abbreviation	Description
ACB	Analog Control Board
AFE	Active Front End
ASD	Adjustable Speed Drive
CMC	Common Mode Choke
CSI	Current Source Inverter
CT	Current Transformer
DMM	Digital Multimeter
DPM	Drive Processor Module
HECS	Hall Effect Current Sensor
HMI	Human Machine Interface
HPTC	High Performance Torque Control
IFM	Interface Module
IGDPS	Isolated Gate Driver Power Supply
LV	Low Voltage
MOV	Metal-oxide Varistor
MV	Medium Voltage
GN	Grounding Network
OIB	Optical Interface Board
OIBB	Optical Interface Base Board
PIV	Peak Inverse Rating
PLC	Programmable Logic Controller
PWM	Pulse Width Modulated
SCB	Signal Conditioning Board
SCR	Silicon-controlled Rectifier
SGCT	Symmetrical Gate Commutated Thyristor
SHE	Selective Harmonic Elimination
SIL	Safety Integrity Level
SPGDB	Self-powered Gate Driver Board

Table 1 - Abbreviations (Continued)

Abbreviation	Description
SPS	Self-powered SGCT Power Supply
STO	Safe Torque Off
TSN	Transient Suppression Network
UPS	Uninterruptible Power Supply
VFD	Variable Frequency Drive
VSB	Voltage Sensing Board
VSI	Voltage Source Inverter
XIO	External Input/Output

Additional Resources

These documents contain additional information concerning related products from Rockwell Automation.

Resource	Description
PowerFlex 7000 HMI Offering with Enhanced Functionality, publication 7000-UM201	Provides detailed information to configure, set up, operate, update and troubleshoot the PowerFlex 7000 HMI Interface Board
HMI Interface Board Software Updater and Firmware Download Procedure, publication 7000-QS002	Provides quick start information on updating HMI Interface Board software
PowerFlex 7000 Medium Voltage AC Drive (ForGe Control) - Troubleshooting Guide, publication 7000-TG002	Provides a list of fault messages, warning messages, spare parts, fault codes, warning codes, and suggested actions
PowerFlex 7000 Medium Voltage AC Drive (Firmware Version 11.xxx) - ForGe Control, publication 7000-TD002	Provides a functional description, parameter descriptions, drive logic and command status, and critical faults
EtherNet/IP Network Devices User Manual, ENET-UM006	Describes how to configure and use EtherNet/IP devices to communicate on the EtherNet/IP network.
Ethernet Reference Manual, ENET-RM002	Describes basic Ethernet concepts, infrastructure components, and infrastructure features.
System Security Design Guidelines Reference Manual, SECURE-RM001	Provides guidance on how to conduct security assessments, implement Rockwell Automation products in a secure system, harden the control system, manage user access, and dispose of equipment.
UL Standards Listing for Industrial Control Products, publication CMPNTS-SR002	Assists original equipment manufacturers (OEMs) with construction of panels, to help ensure that they conform to the requirements of Underwriters Laboratories.
American Standards, Configurations, and Ratings: Introduction to Motor Circuit Design, publication IC-AT001	Provides an overview of American motor circuit design based on methods that are outlined in the NEC.
Industrial Components Preventive Maintenance, Enclosures, and Contact Ratings Specifications, publication IC-TD002	Provides a quick reference tool for Allen-Bradley industrial automation controls and assemblies.
Safety Guidelines for the Application, Installation, and Maintenance of Solid-state Control, publication SGI-1.1	Designed to harmonize with NEMA Standards Publication No. ICS 1.1-1987 and provides general guidelines for the application, installation, and maintenance of solid-state control in the form of individual devices or packaged assemblies incorporating solid-state components.
Industrial Automation Wiring and Grounding Guidelines, publication 1770-4.1	Provides general guidelines for installing a Rockwell Automation industrial system.
Product Certifications website, rok.auto/certifications.	Provides declarations of conformity, certificates, and other certification details.

You can view or download publications at rok.auto/literature.

Overview of Drive

Introduction

The PowerFlex® 7000 drive represents the third generation of medium voltage drives at Rockwell Automation®. The PowerFlex 7000 medium voltage AC drive is part of the PowerFlex family of AC drive products. The Allen-Bradley® PowerFlex family of drives incorporates leading-edge technology, embedded communications, and significant commonality across multiple platforms, networks, operator interface programming and hardware. Designed for end users, solution providers and OEMs, PowerFlex 7000L liquid-cooled drives meet applications ranging from 3000…9000 Hp (2240…6715 kW).

The PowerFlex 7000L drive is a general purpose standalone medium voltage drive that controls speed, torque, direction, starting, and stopping of standard asynchronous or synchronous AC motors. The drive is intended for use on a host of standard and specialty applications such as fans, pumps, compressors, mixers, conveyors, kilns, fan-pumps, and test stands. Primary industries for these applications include petrochemical, cement, mining and metals, forest products, power generation, and water wastewater.

The PowerFlex 7000L drive is a global product that adheres to the most common standards from NEC, IEC, NEMA, UL, and CSA. The drive is available with the world's most common supply voltages at medium voltage, from 2400…6600V.[(a)]

The design focus is on high reliability, ease of use, and lower total cost of ownership.

Liquid Cooling

The PowerFlex 7000L 'C' frame liquid-cooled drive uses a closed loop system to cool the converter main power components and the integral DC link inductor.

Benefits of Liquid Cooling

- Smaller drive dimension compared to air-cooled drives of similar rating
- Higher power rating capability
- Quiet operation in control room
- Low loss rejection to the control room reduces air conditioner loading
- Majority of losses rejected outside the control room via a liquid-to-air or liquid-to-liquid type heat exchanger
- Completely integrated medium voltage (MV) drive package reduces customer installation costs and start-up time.
- Higher power rating capability (up to 9000 Hp / 6715 kW)
- 18-pulse and active front end (AFE) rectifiers for low harmonic solutions that meet IEEE 519-2004 Harmonic Guidelines
- Motor-friendly current and voltage output waveforms for use with standard new and existing motors
  - Inverter duty motors not required

(a) For 2400V and 3300V designs, contact factory.

  - Motor temperature derating not required
  - No additional dv/dt or peak voltage stress to motor insulation system
  - Tested up to 15 kilometers (9.3 miles) cable distance between drive and motor
- Spacious cable termination cabinet for ease of use by installation contractor
- Cable termination stabs accommodate:
  - 3 cables in / 3 cables out (Direct-to-Drive™ or AFE rectifier)
  - 9 cables in / 3 cables out (18-pulse)
  - Top or bottom entry and exit of line and load cables
- 90% of drive losses are rejected outside the control room
- Integral liquid-cooled DC link inductor reduces overall dimension and eliminates external interwiring.
- Integral pumping panel includes:
  - Line supply c/w disconnect and fusing
  - Closed loop coolant system
  - Iron and chloride free liquid ethyl-glycol/deionized water mixture
  - Low conductivity coolant (1-2 micro-Siemens / cm^3)
  - Isolated from medium voltage
  - Fully serviceable low voltage compartment isolated from medium voltage power
  - Monitors coolant temperature, flow, level, conductivity, and pressure
  - Redundant pumping system (optional)
  - Automatic pump change over on pump failure
  - 1/2 turn valves with quick disconnect couplers for pump replacement when drive is operating
  - Full drip tray to contain any spilled coolant
  - Drain and fill pump for convenient filling
  - Industrial schedule 80 CPVC piping for pump panel, headers and manifolds (no condensation possibility)
  - Control hardware for cycling of main / redundant cooling pumps and heat exchanger fans
- **"Plug and play" PowerCage™ assembly concept**
  - Central location for easy access to all main power components
  - Common modular design for rectifier / inverter
  - Same concept as air-cooled drive for front access, easy component replacement, and no special tools
  - 5…10 minutes to replace main power devices
  - No need to remove any cooling lines for device replacement
  - Reduced manufacturing time for faster delivery and lower cost
- **Keyed mechanical interlock**
  - Interlocked with main disconnect means to prevent unsafe access to medium voltage section

Topology

The PowerFlex 7000L drive utilizes a Pulse Width Modulated (PWM) – Current Source Inverter (CSI) for the machine side converter as shown in Figure 1. This topology offers a simple, reliable, cost effective power structure that is easy to apply to a wide voltage and power range. The power semiconductor switches used are easy-to-series for any medium voltage level. Semiconductor fuses are not required for the power structure due to the current limiting DC link inductor.

With 6500V PIV rated power semiconductor devices, the number of inverter components is kept to a minimum. For example, only six inverter switching devices are required at 2400V, 12 at 3300…4160V, and 18 at 6600V.

The PowerFlex 7000L drive has the additional benefit of inherent regenerative braking for applications where the load is overhauling the motor (for example, downhill conveyors), or where high inertia loads (for example, fans) need to be slowed down quickly. Symmetrical Gate Commutated Thyristors (SGCTs) are used for machine converter switches. Silicon-controlled rectifiers (SCRs) (for 18-pulse) or SGCTs (for AFE rectifiers) are used for the line converter switches. An AFE configuration is shown in Figure 1.

The PowerFlex 7000L drive provides a selectable option for enhanced torque control capabilities and increased dynamic control performance. This High Performance Torque Control (HPTC) feature delivers 100% torque at zero speed and provides torque control through zero speed with smooth direction transition.

Figure 1 - AFE Rectifier (4160 Volt)

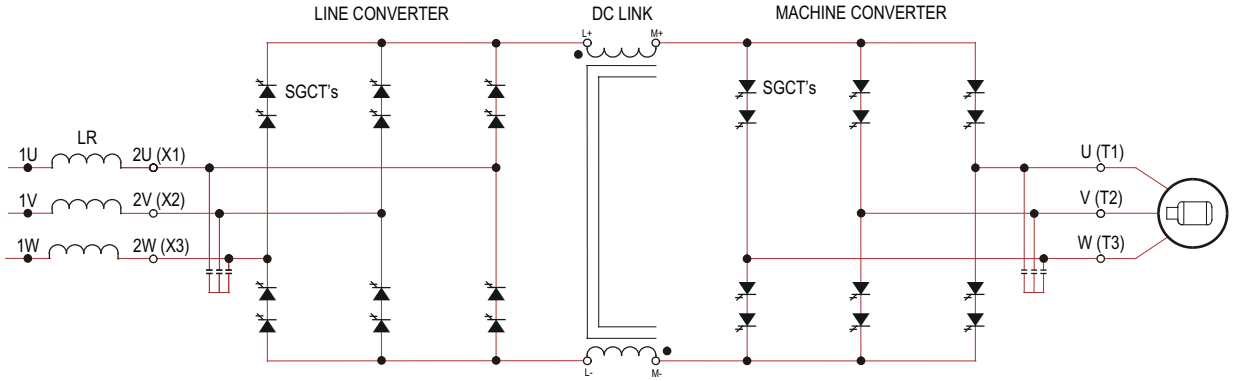

Rectifier Designs

There are two offered designs for the rectifier of the PowerFlex 7000L drive.

18-pulse Rectifier

An 18-pulse phase-controlled rectifier is shown in Figure 2. IEEE 519-2014 requirements are met in the majority of cases without passive filters; however, a multi-winding isolation transformer is required to mitigate the low order harmonics by phase shifting principles.

Isolation transformers are available in indoor dry type, cast coil, and outdoor oil-filled designs for maximum flexibility in dealing with floor space, installation costs, and control room air conditioner loading.

The line voltage and current harmonics at the input of the 18-pulse drive meet the harmonic requirements in the IEEE 519-2014 guideline for harmonics. The 18-pulse rectifier consists of one master bridge and two slave bridges and will always have a total of 18 silicon controlled rectifier (SCR) switching devices.

Figure 2 - 18-pulse Rectifier and Input Waveforms

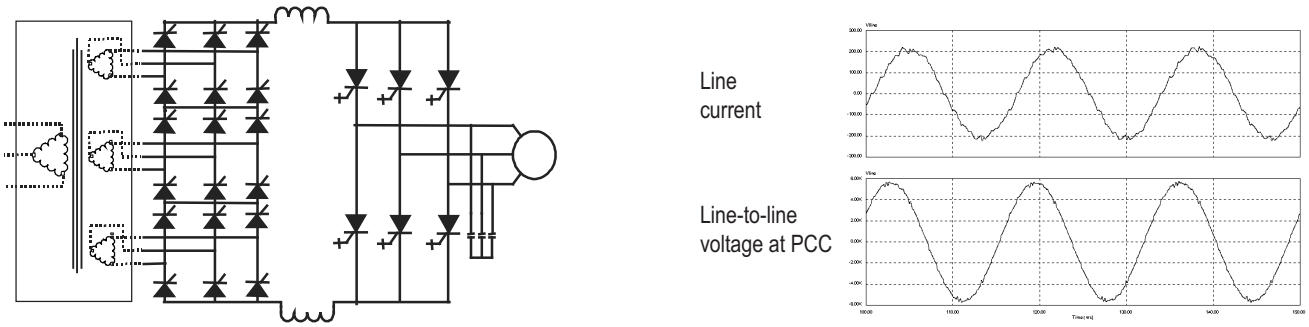

Active Front End (AFE Rectifier)

An AFE rectifier suitable for the PowerFlex 7000L topology is also commonly called a PWM rectifier. This is particularly attractive since it does not require an isolation transformer to meet IEEE 519-2014. Most available technologies in today's MV market require a multi-winding transformer to mitigate the unwanted harmonics by phase shifting the transformer secondary windings. Depending on the topology, the transformer can have up to 15 sets of secondary windings. Elimination of the isolation transformer reduces capital and installation costs, saves on valuable floor space, and increases overall system efficiency.

The AFE rectifier requires a switching pattern that complies with similar rules as the inverter. The pattern is 7-pulse selective harmonic elimination (SHE), which eliminates the 5th, 7th, and 11th harmonics. The integral input capacitors are designed to reduce the current harmonics of the higher order. The filter transfer function technique is used to place the filter cut-off frequency in a region where no harmonics are present. This prevents the resonance effect of system and/or drive harmonic frequencies with the filter cut-off frequency. Other factors that are considered when designing the filter are the input power factor and the requirement on Total Harmonic Distortion (THD) of input current and voltage waveforms.

The AFE rectifier is ideal when a distribution transformer is required to step down the distribution voltage to match the VFD and motor voltage. The rectifier input current, the rectifier terminal voltage and the line current and voltage waveforms are shown in Figure 3. The line voltage and current harmonics at the input of the AFE drive meet the harmonic requirements in the IEEE 519-2014 guideline for harmonics.

Figure 3 - Active Rectifier (PWM) and Input Current/Voltage Waveforms

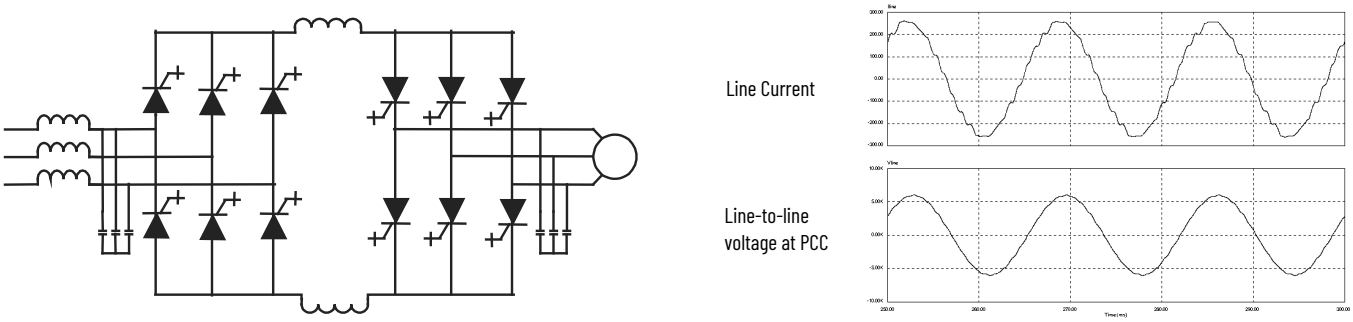

Direct-to-Drive Technology

Direct-to-Drive technology allows you to:

- connect supply power directly to the drive without an Isolation Transformer
- connect a new or existing motor directly to the drive without extra motor filtering.

Most MV drive manufacturers use multi-winding isolation transformers to mitigate unwanted harmonics by phase shifting the transformer secondary windings. Depending on the topology, the transformer can have up to 15 sets of secondary windings. The disadvantages to this method are the high degree of drive and transformer complexity, a very high component count and many interconnecting cables and connection points. This leads to much higher maintenance requirements and lower reliability.

Manufacturers also use isolation transformers to protect motors from common mode voltage stress. When transformers are used they allow the motor neutral point to be connected to ground, but with this method, the common mode voltage that would otherwise be impressed on the motor is impressed on the transformer. The disadvantage to this method is that increased transformer insulation and increased cable insulation is required between the transformer and the drive so it can withstand the common mode voltage stress.

Rather than use an isolation transformer, the Direct-to-Drive AFE uses the semiconductor switching pattern to reduce line current harmonics to levels that comply to the world's most accepted harmonic standards. The Active Front End is the best method of harmonic cancellation because it does not suffer from complexity and high component count like multi-pulse drive topologies do.

Direct-to-Drive technology produces virtually no common mode voltage so it is suitable for new or existing motors and imposes no stress on the drive input. The advantage of Direct-to-Drive technology over an Isolation Transformer is that no extra insulation is required in the motor, in the motor cables or in the line cables.

In addition to mitigating common mode voltage, Direct-to-Drive technology mitigates dv/dt or reflected wave voltage stress on motors.

The simplicity of its design results in a lower initial capital investment, lower operating cost, lower installation cost and lower maintenance cost relative to drives that require isolation transformers.

The PowerFlex 7000L drive with Direct-to-Drive technology is typically smaller and lighter than drive technologies that use isolation transformers. Isolation transformers represent 30…50% of a drive system size and 50…70% of the system's weight. This means that there is no interwiring between drive and transformer (for external transformer configurations). This makes the PowerFlex 7000L drive the simplest to install.

Motor Compatibility

The PowerFlex 7000L drive achieves near sinusoidal current and voltage waveforms to the motor, resulting in no significant additional heating or insulation stress. Temperature rise in the motor connected to the VFD is typically 3 °C (5.5 °F) higher compared to across the line operation. Dv/dt in the voltage waveform is less than 10V/µs. The peak voltage that the motor insulation will see is the rated motor RMS voltage divided by 0.707. Reflected wave and dv/dt issues often associated with VSI (voltage source inverter) drives are a non-issue with the PowerFlex 7000L drive. Typical motor waveforms are shown in Figure 4. These motor friendly waveforms are achieved by utilizing a SHE pattern in the inverter to eliminate major order harmonics, in conjunction with a small output capacitor (integral to the drive) to eliminate harmonics at higher speeds.

Standard motors are compatible without derating, even on retrofit applications.

Motor cable distance is virtually unlimited. This technology has been tested, controlling motors up to 15 km (9.3 miles) away from the drive.

Figure 4 - Motor Waveforms at Full Load, Full Speed

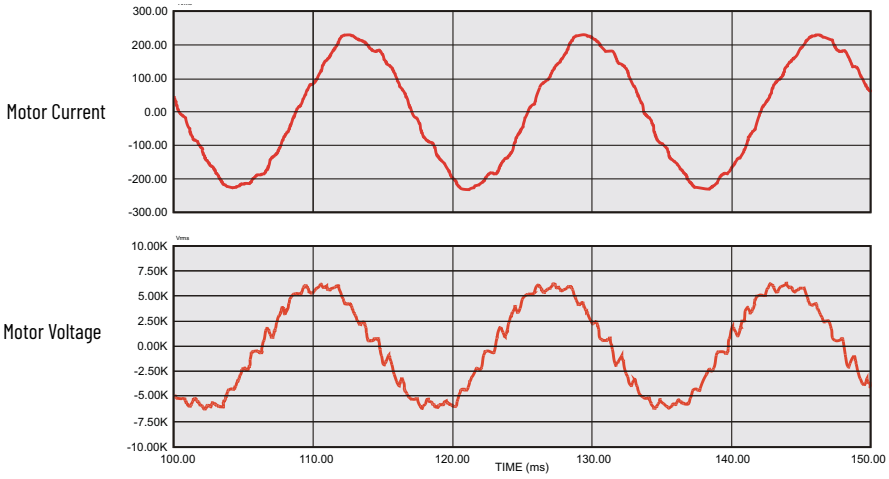

Symmetrical Gate-commutated Thyristor (SGCT) Features and Benefits

Positioning the gate drive close to the SGCT (Figure 5), creates a low inductance path that provides more efficient and uniform gating of the device. As a result, the device is better suited than a conventional GTO to handle the fluctuating levels of voltage and current while it is switching on and off during gating.

An SGCT has similar characteristics to an integrated gate-commutated thyristor (IGCT) (used on some VSI drives), including low conduction and switching losses, low failure rate, and double sided cooling for low thermal stress. However, the SGCT achieves voltage blocking capability in both forward and reverse directions up to 6500V by a NPT (Non-Punch-Through) structure and nearly symmetrical pnp transistor in the wafer, while the current is unidirectional. Unlike many VSI topologies that use IGBTs, the semiconductors used in the PowerFlex 7000L feature a non-rupture, non-arc failure mode. In the unlikely event of a device failure, the fault would be contained within the device.

Implementing SGCTs in the PowerFlex 7000L drive results in significant advantages including:

1. Simplification of the snubber design and a reduction in the size of the snubber capacitor by a factor of 10.
2. Operation at a higher switching frequency (420...540 Hz), hence reducing the size of passive components (DC link inductor and motor filter cap) by 50%.
3. Improving performance of the drive.
4. Reduction of component count, hence improving reliability, cost, and size of the drive.
5. Fail safe failure mode (non-rupture).

Figure 5 - SGCT with Integrated Gate Drive and Unit Cell Structure

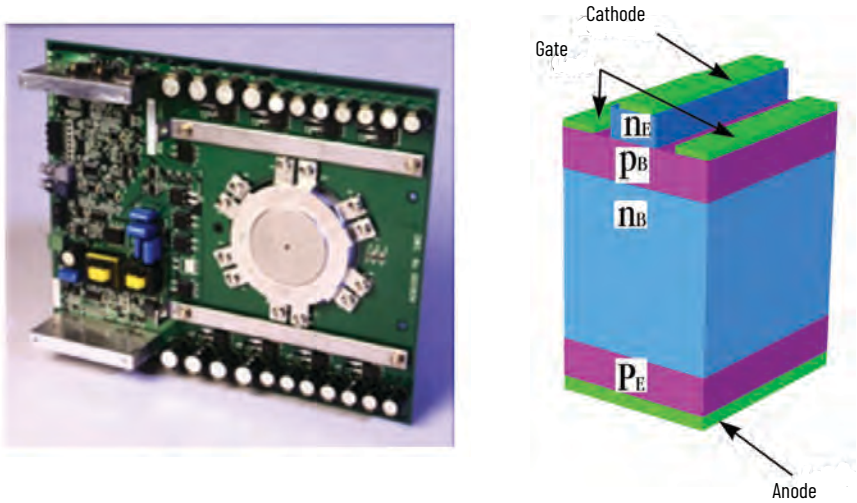

Simplified Electrical Drawings

Figure 6 - 3300 / 4160 Volt – 18-pulse

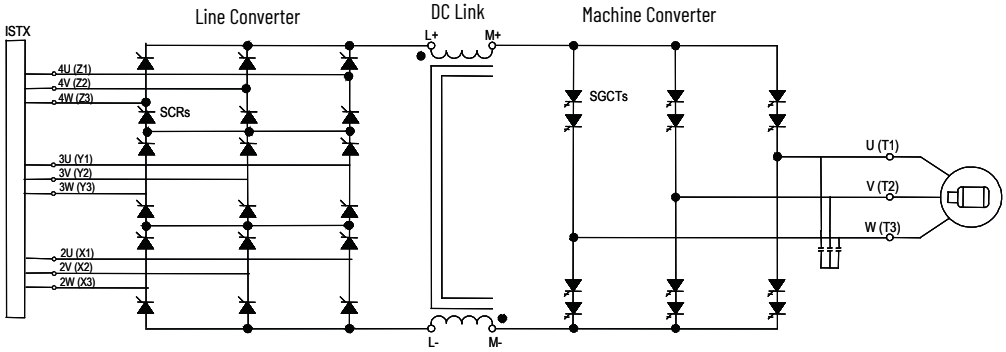

Figure 7 - 3300 / 4160 Volt – Active Front End

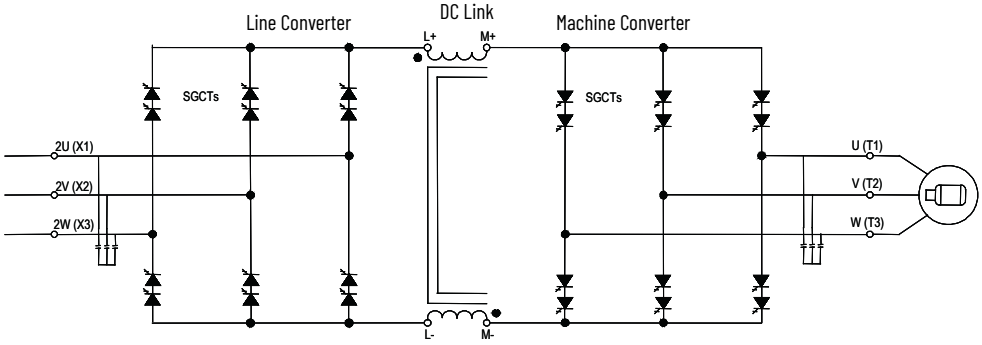

Figure 8 - 6000-6600 Volt – 18-pulse

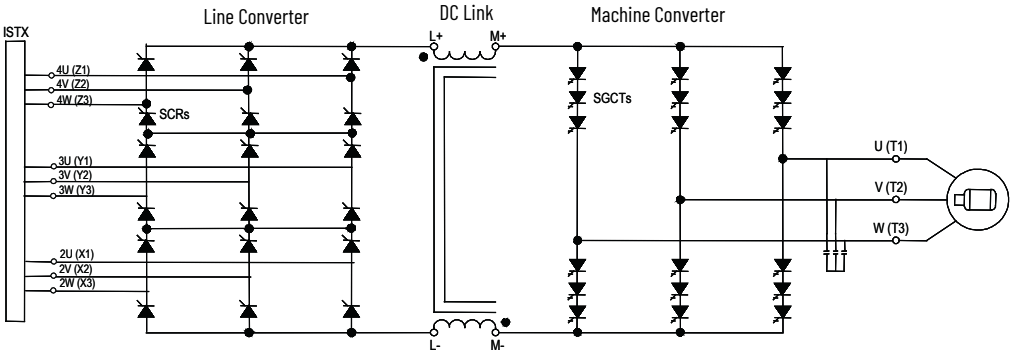

Figure 9 - 6000-6600 Volt – Active Front End

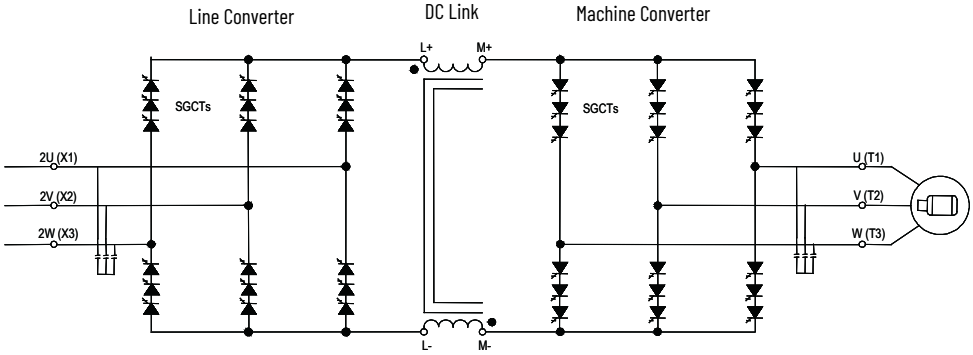

Control Overview

Figure 10 - PowerFlex 7000L "C" Frame Function Block Diagram

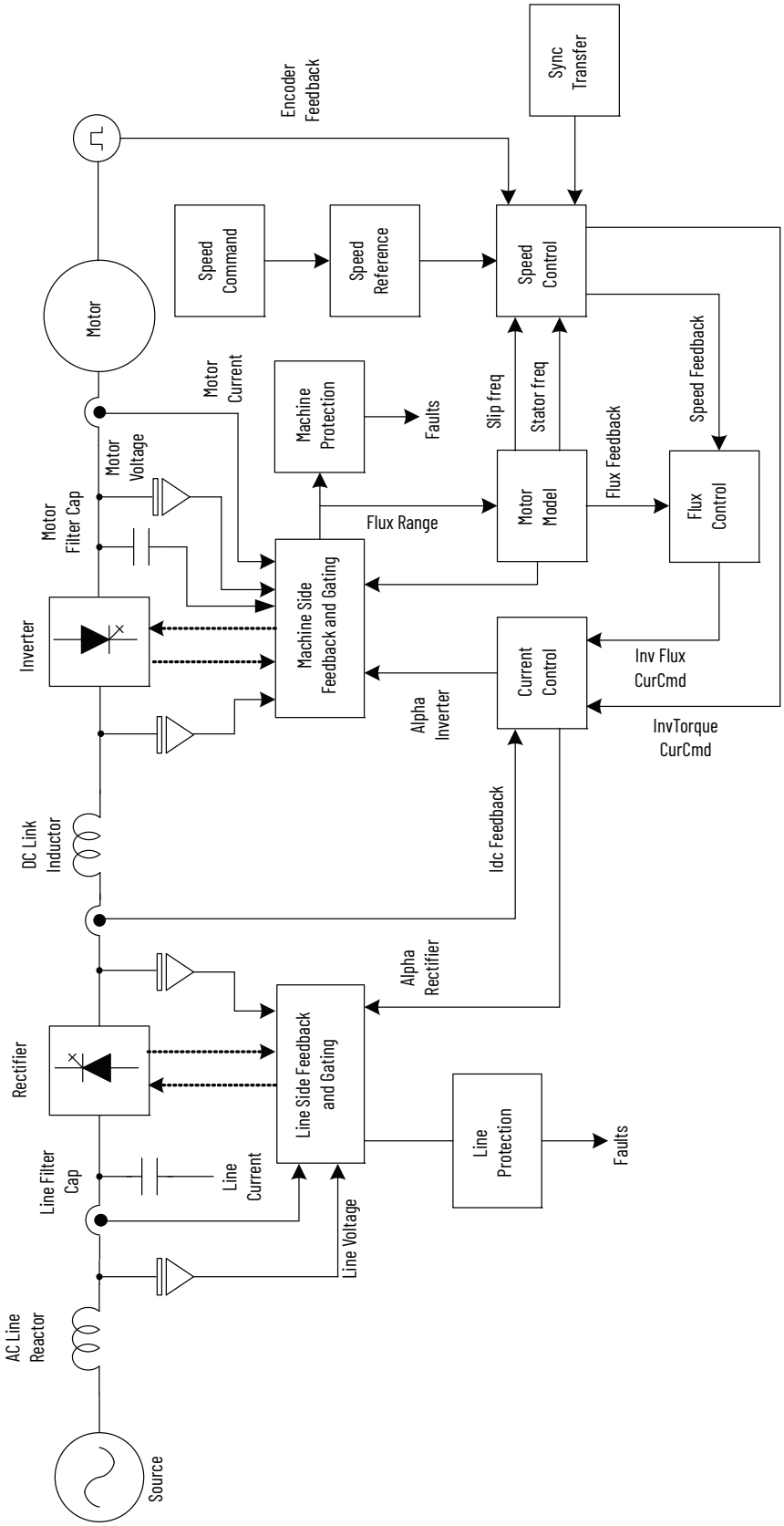

Direct Vector Control

The method of control in the PowerFlex 7000 “C” frame medium voltage AC drive is called sensorless direct vector control, meaning that the stator current is divided into torque producing and flux producing components, allowing the motor torque to be changed quickly without affecting motor flux. This method of control is used without encoder feedback for applications requiring continuous operation above 6 Hz and less than 100% starting torque.

Full vector control can also be achieved with encoder feedback for applications requiring continuous operation down to 0.2 Hz with up to 150% starting torque. Vector control offers superior performance over volts/hertz type drives. The speed bandwidth range is 5...25 rad/s, while the torque bandwidth range is 15...50 rad/s.

Control Hardware

The control hardware includes a processor board (DPM) with an interface to six fiber optic boards (depending on the voltage and number of switching devices) via OIBB, an analog conditioning board (ACB) and an external IO board (XIO). The control hardware is used for rectifier and inverter, induction or synchronous drive control and the two rectifier types (18-pulse or Active Front End).

The DPM features two floating point DSPs (Digital Signal Processor) and a FPGA (Field Programmable Gate Array) for advanced functions such as gating and diagnostics, fault handling and drive synchronization control.

Figure 11 - Control Hardware Layout

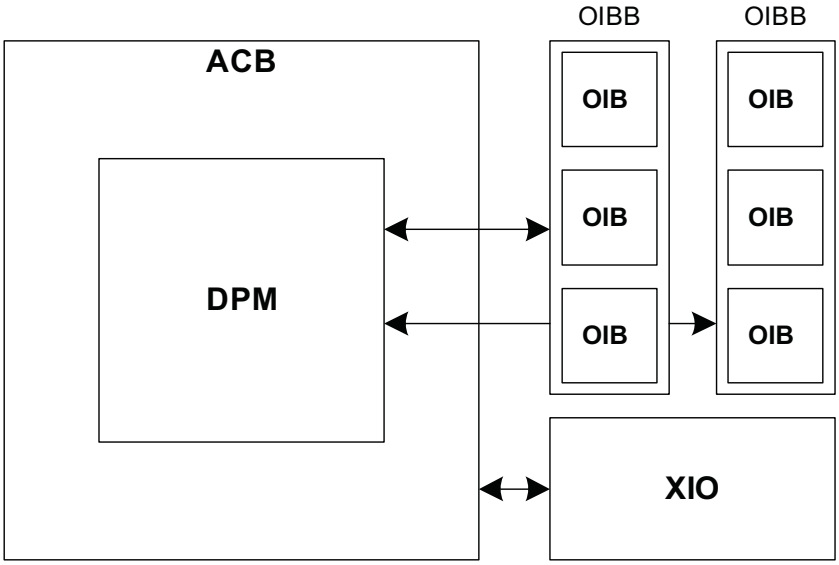

- ACB - Analog Conditioning Board
- DPM - Drive Processor Module
- OIBB - Optical Interface Base Board
- XIO - External Input/Output
- OIB - Optical Interface Board

Functional Safety

Safe Torque Off

Safe Torque Off is a functional safety feature that is integrated into the PowerFlex 7000, available for Active Front End (AFE) and Direct-to-Drive configurations. The drive can receive a safety input signal (for example, from an optical sensor or a safety gate) and remove rotational power from the motor, allowing the motor to coast to a stop. After the Safe Torque Off command is initiated, the drive will declare it's in the safe state. The drive itself remains powered and the safe state is reliably monitored to help ensure no rotational torque can be delivered to the motor. The drive can return rotational power to the motor after Safe Torque Off condition has been reset.

Figure 12 - Safe Torque Off Option

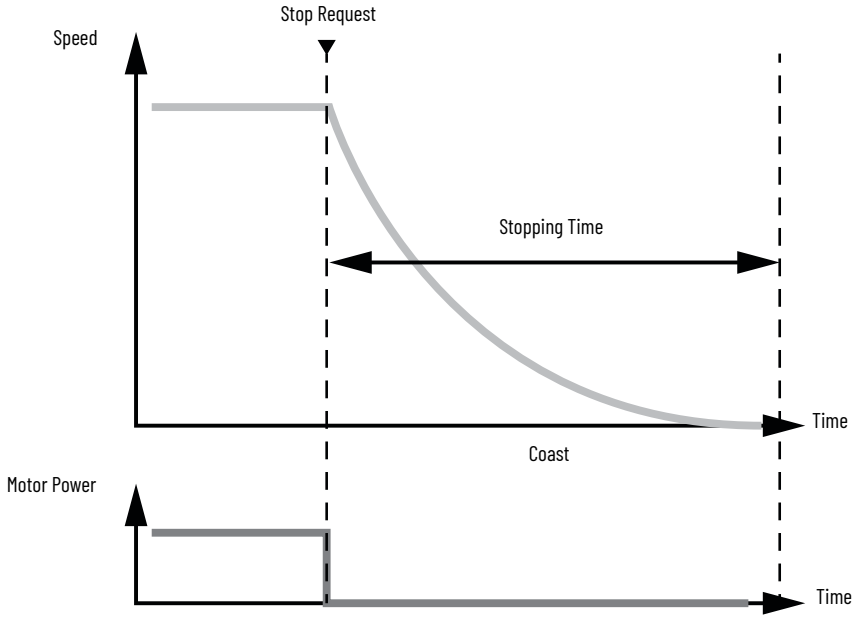

An internal safety relay provides for the safety input and reset circuits.

Safe Torque Off can be used in Active Front End (AFE) and Direct-to-Drive rectifier drive configurations for A, B, and C frames. It cannot be used for parallel drives, N+1, N-1, synchronous transfer and 18-pulse drive configurations.

This feature is certified by TÜV Rheinland for use in safety applications up to and including Safety Integrity Level 3 (SIL3) and Category 3, Performance Level e (Cat 3, PL e). More information on functional safety and SIL and PL ratings can be found in the following standards:

- EN 61508
- EN 62061
- EN 61800-5-2
- EN 13849-1

See publication 7000-UM203 for more information that is related to the functional safety option.

Operator Interface

The human-machine interface (HMI) board is an HIM-enabling device for the PowerFlex 7000 drive. The board lets you acquire all the necessary executable tools, documentation, and reports required to commission, troubleshoot, and maintain the drive.

IMPORTANT Any references to HIM can refer to PanelView Plus 6 (shipped prior to 2022), or eHIM (shipped from 2022) terminal.

Via the HMI board, the user can choose the style and size of the desired Windows®-based operator terminal to interact with the drive (for example, PanelView™ Plus 6 Windows CE terminal, eHIM Windows 10 terminal, laptop, or desktop computer). The HMI board removes past issues with compatibility between the drive and configuration tools, as all the necessary tools are acquired from the drive.

The HMI board is well suited for applications that require remote placement of the operator terminal and remote maintenance.

Figure 13 - Operator Interface

PanelView Plus 6[1]

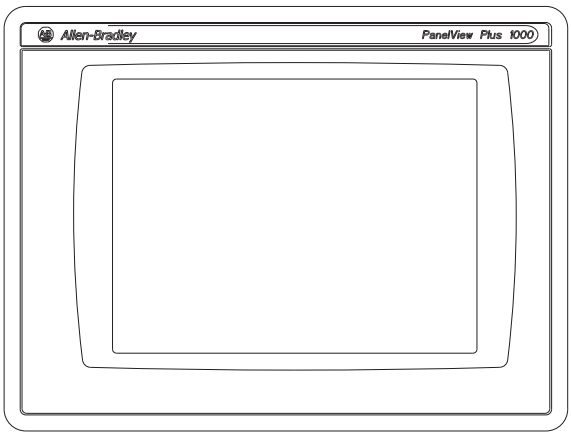

eHIM

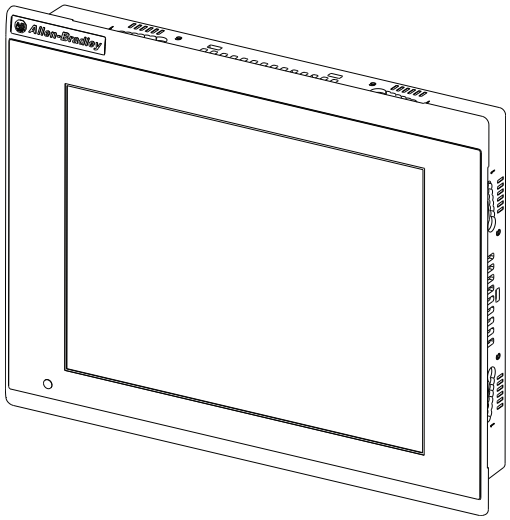

(1) The PanelView Plus 1000 is PanelView Plus 6 with a 10 in. screen.

Basic Configurations

There are three basic configurations for the HIM.

Locally-mounted HIM

IMPORTANT This configuration applies to both the eHIM and PanelView Plus 6 terminal.

The HIM is mounted on the LV door of the VFD. There is also a service access port (RJ-45 connector) on the LV door.

Remote-mounted HIM

IMPORTANT This configuration only available with PanelView Plus 6 HIM.

The HIM is not mounted in the traditional location on the low voltage door of the VFD. A remote mounting plate, complete with E-Stop push button, and HIM is supplied loose for you to mount wherever desired. The HIM connects to the VFD via a hardwired ethernet cable. There is no significant functional distance limitation.

This is ideal for non-PLC users wanting to control and monitor remotely (for example, at the driven machine or control room). This is also ideal if you, for example, have policies in place to control access to medium voltage equipment and the associated requirements of PPE when using the operator interface at the VFD.

No HIM supplied

IMPORTANT This configuration only available with PanelView Plus 6 HIM.

A service access port (RJ-45 connector) is located on the LV door of the VFD. You can use your own laptop as the HIM. All programs required to use the laptop as the HIM are stored in the VFD. Their laptop is connected to the VFD via a hardwired Ethernet cable, when required. This is ideal for unmanned sites, where a dedicated HIM is not required.

See publication 7000-UM201 for detailed instruction for the HIM.

See publication 7000-UM151 for detailed instruction for 'B' frame drives using the PanelView 550 HIM.

Notes:

Drive Installation

Safety and Codes

WARNING: The Canadian Electrical Code (CEC), National Electrical Code (NEC), or local codes outline provisions for safely installing electrical equipment. Installation MUST comply with specifications regarding wire type, conductor sizes, branch circuit protection, and disconnect devices. Failure to do so may result in personal injury and/or equipment damage.

Unpacking and Inspection

Before leaving the factory, all drives have been tested both mechanically and electrically. Immediately upon receiving the drive, remove the packing and check for possible damage. Report any damage immediately to the claims office of the common carrier.

After unpacking the material, check the items that are received against the bill of lading to assure that the nameplate description of each item agrees with the material ordered. Inspect the PowerFlex® 7000L drive for physical damage, as stated in the Rockwell Automation Conditions of Sale.

IMPORTANT All claims for breakage and damage whether concealed or obvious must be made to the carrier by the Customer as soon as possible after receipt of the shipment. Rockwell Automation is glad to give the Customer reasonable assistance in the securing of adjustment for such damage claims.

Remove all packing material, wedges, or braces from within the drive. Operate the contactors and relays manually to assure that they operate freely. If any part of the equipment is not installed when unpacked, store in a clean, dry place. The storage temperature must be between -40...+70 °C (-40...+158°F) with a maximum humidity of 95%, non-condensing, to guard against damage to temperature sensitive components in the controller.

Transportation and Handling

The PowerFlex® 7000L drive is shipped on a wooden skid, which is bolted to the underside of the cabinetry. The drive must remain bolted to the shipping skid until it is delivered to its final installation area. Lifting angles are supplied bolted to the top of the cabinetry. The drive must be kept in an upright position during any handling.

The drive must be transported on a pallet or via use of the lifting beam supplied as part of all 2300 mm (91 in.) high cabinets.

ATTENTION: The load rating of the lifting device must be sufficient to safely raise the controller sections. See the packing slip enclosed with shipment for shipping weights.

Round rollers can be used to help move the drive to the installation site. Once at the final site, the pipe rolling technique can be used to place the cabinet in the desired position.

WARNING: Care must be exercised when using either a forklift or the pipe rolling technique for positioning purposes to ensure that the equipment is not scratched, dented or damaged in any manner. Always exercise care to stabilize the drive during handling to guard against tipping and injury to personnel.

IMPORTANT Customer installation duties must be performed correctly. Errors can damage the drive and delay in commissioning.

Never attempt to lift or move the drive by any means other than the methods listed, as structural damage or personal injury could result. The following methods of handling are recommended:

Overhead Lifting

1. Attach rigging to the lifting angles on the top of the cabinetry.

   ATTENTION: The load rating of the lifting device and rigging must be sufficient to safely raise the drive. See the shipping weights on the packing slip enclosed with the shipment.

2. Do not pass ropes or cables through the support holes in the lifting angles. Use slings with safety hooks or shackles.
3. Select or adjust the rigging lengths to compensate for an unequal weight distribution of load and maintain the drive in an upright position.
4. To reduce the tension on the rigging and the compressive load on the lifting device, do not allow the angle between the lifting cables/chains and vertical to exceed 45°.

   ATTENTION: Drives can contain heavy equipment that could be adversely affected by tilting.

Figure 14 - Overhead Lifting

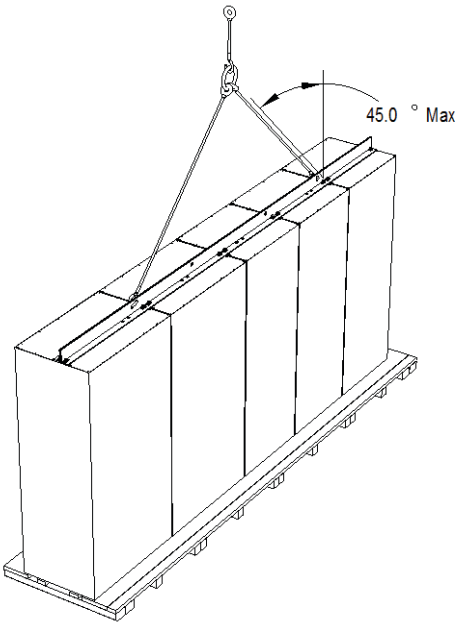

Rod or Pipe Rollers

This method is only suitable when there are no inclines and the drive is being moved on one floor level.

1. Boards 50.8 x 152.4 mm (2 x 6 in.) or equivalent and at least 300 mm (12 in.) longer than the drive must be placed under the shipping skid.
2. Carefully ease the shipping platform over the roller pipes until the drive weight is borne on the roller pipes.
3. The drive can be rolled to its designated location. Steady the load to prevent tipping.

Figure 15 - Rod or Pipe Rollers

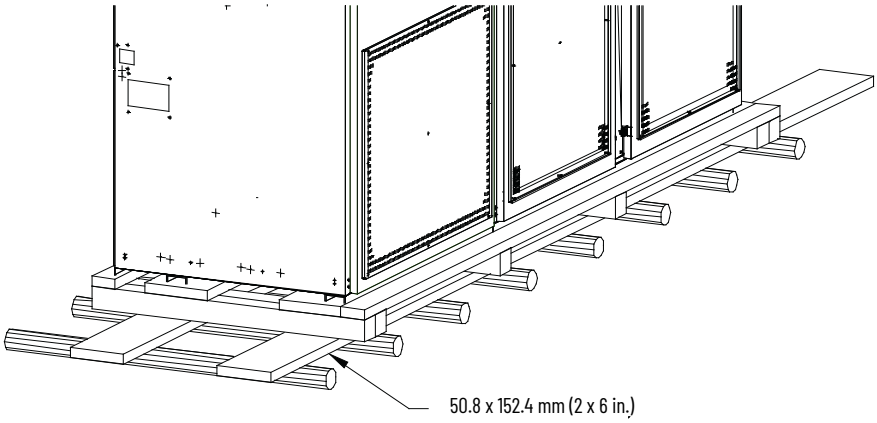

Fork Lift Trucks

A single fork lift truck may be used on drives not exceeding 3 m (120 in.) in length if the lift truck has sufficient lifting capacity. Larger drives can be moved with two forklift trucks operating in tandem.

1. Insert forks into openings of shipping skids from the rear of the drive.
2. Carefully balance the drive on the forks because the drives are heavier at one side.
3. Use safety straps when handling to steady the drive while moving.

Storage

If it is necessary to store the drive, be certain to store in a clean dry dust free area.

Storage temperature must be maintained between -40…+70°C (-40…+158°F). If storage temperature fluctuates or if humidity exceeds 85%, use space heaters to prevent condensation. Store the drive in a heated building having adequate air circulation. Do not store the drive outdoors.

Siting of the Drive

Site Considerations

The standard environment in which the equipment is designed to operate is:

- Elevation above sea level less than 1000 m (3250 ft)
- Ambient air temperature between 0°C (32°F) and 40°C (104°F)
- Relative humidity of the air not to exceed 95% non-condensing

For the equipment to operate in conditions other than those specified, consult the local Rockwell Automation sales office.

The equipment requires the following site conditions:

1. Indoor installation only, no dripping water or other fluids
2. Clean air for cooling requirements
3. Level floor for anchoring the equipment. See dimension drawings for the location of the anchoring points.
4. The room in which the equipment is located must allow for full opening of the doors of the equipment, typically 1200 mm (48 inches). Also, allowances have to be made for clearance for fan removal. This fan allowance must be greater than 700 mm (27.5 inches).

   or

   Dimension drawings can be obtained by contacting the local Rockwell Automation sales office. The equipment does not require rear access for servicing.
5. Allowance must be made for the stream of cooling air which exits the drive at the top. The flow of cooling air into and out the drive must be kept clear and uninhibited.
6. The room in which the equipment is located must be large enough to accommodate the thermal losses of the equipment since air conditioning may be required; the ambient temperature must not exceed that for which the equipment is rated. The heat created by the drive is directly proportional to the power of the motor being driven and the efficiency of equipment within the room. If thermal load data is required, contact the Rockwell Automation Sales office.

7. The area in which the drive is located must be free of radio frequency interference such as encountered with some welding units. This can cause erroneous fault conditions and shut down the drive.
8. The equipment must be kept clean. Dust in the equipment decreases system reliability and inhibits cooling.
9. Power cable lengths to the motor are unlimited due to the near sinusoidal voltage and current waveforms. Unlike voltage source drives, there are no capacitive coupling, dv/dt, or peak voltage issues that can damage the motor insulation system. The CSI-PWM topology that is used in the PowerFlex 7000L drive has been tested with motors located up to 15 km (9.3 miles) from the drive.
10. Only personnel familiar with the function of the drive must have access to the equipment.
11. The drive is designed for front access and must be installed with adequate and safe clearance to allow for total door opening. The back of the unit can be placed against a wall, although some customers prefer back access also. If back access is desired, set drive 300 mm (12 in.) out from wall.

ATTENTION: An incorrectly applied or installed drive can result in component damage or a reduction in product life. Ambient conditions not within the specified ranges may result in malfunction of the drive.

Installation

When the drive has been placed at its installation area, remove the lag bolts that fasten the shipping skid to the drive. The drive is moved off the shipping skid and the shipping skid can be discarded.

Position the drive in its desired location. Verify the drive is on a level surface and that the position of the drive will be vertical when the anchor bolts are installed.

The location of the anchor points is provided with the dimension drawing of the drive.

Install and tighten the anchor bolts. (M12 or 1/2 in. hardware required). Engineered bolt systems are required for seismic requirements. Consult factory.

Remove the top lifting angles, retain the hardware.

Install the lifting angle hardware in the tapped holes at the top of drive. This prevents leakage of cooling air and keeps dust out of the equipment.

Joining Shipping Splits

The drive may have been shipped in two or more shipping sections, which will be connected at installation. The surfaces must be level. Arrange the sections per the information that is provided in the dimension drawings, and move the sections together. Ground bus, power, and control connections are to be made per the electrical diagrams provided. Side sheets of the enclosures are to be joined with thread forming screws using the available holes.

Liquid-cooled Drives may require joining of the coolant pipes. Some enclosure ratings may require the addition of silicone sealant where cabinets join together to prevent the possible ingress of dripping water.

For Direct-to-Drive liquid-cooled 6600V Drives (430A, 495A, and 575A rated current) the Drive will be shipped in two sections as shown in Figure 16.

Figure 16 - Typical Split Drive

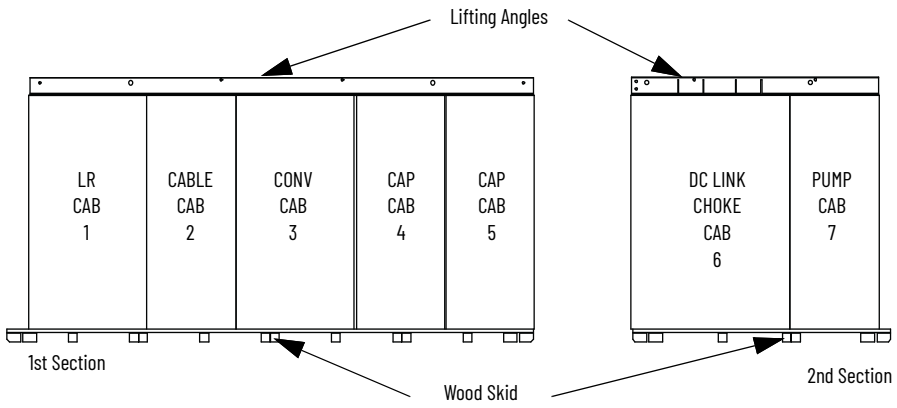

The first section consists of five cabinets.

The second section consists of two cabinets.

Final placement requires that the first and second sections are joined at final installation site.

WARNING: Heavy Magnetic DC Link Chokes up to 4600 kg (10,000 lb) are shipped inside DC Link Choke cabinet. Professional Millwright/Rigging contractors are required for safe final placement of Drive sections.

Connect the Sections

Field connect the following:

- CPVC pipe splices – two pieces
- Power Bus Splice Kit – four pieces
- Ground Bus Splice – one piece
- Control Wiring

Tools Required (not supplied)

- Adjustable or socket wrenches for 6 mm, 10 mm, 12 mm, and 5/8 in. bolt and nut hardware
- Strap wrench for tightening CPVC unions
- Screwdriver assortment
- Cable ties
- Wire cutters

Install CPVC Piping Splices

- Open doors of capacitor cabinet (Cabinet #5) next to DC Link Choke cabinet (Cabinet #6). Refer to Figure 17.
- Remove capacitor from position #3, if installed (not all configurations have a capacitor in this location). It is not necessary to remove capacitor from position #2.

ATTENTION: Capacitors weigh up to 100 kg (220 lb). Use two people to remove the unit from the structure.

Figure 17 - Capacitor Cabinet

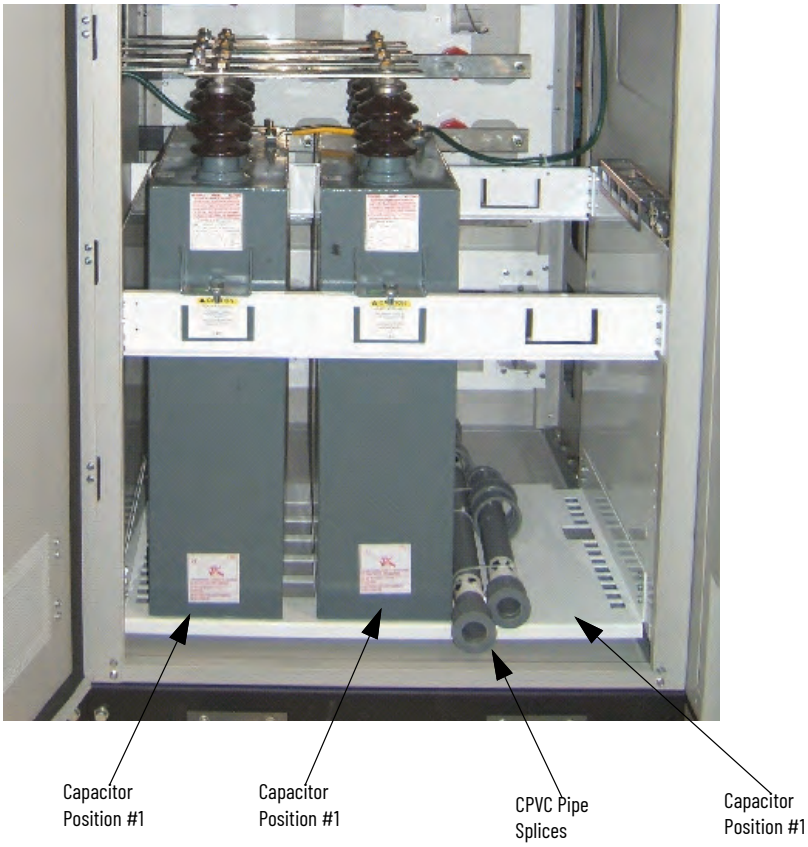

- Remove CPVC pipe splices shipped in the capacitor cabinet. Install and tighten the four CPVC unions with strap wrench (1/4 to 1/2 turn past hand tight). Ensure O-ring is seated inside male end of union. Refer to Figure 18, Figure 19, and Figure 20. Do not use CPVC primer or cement.

Figure 18 - CPVC Pipe Splices (Capacitor #2 not shown for clarity)

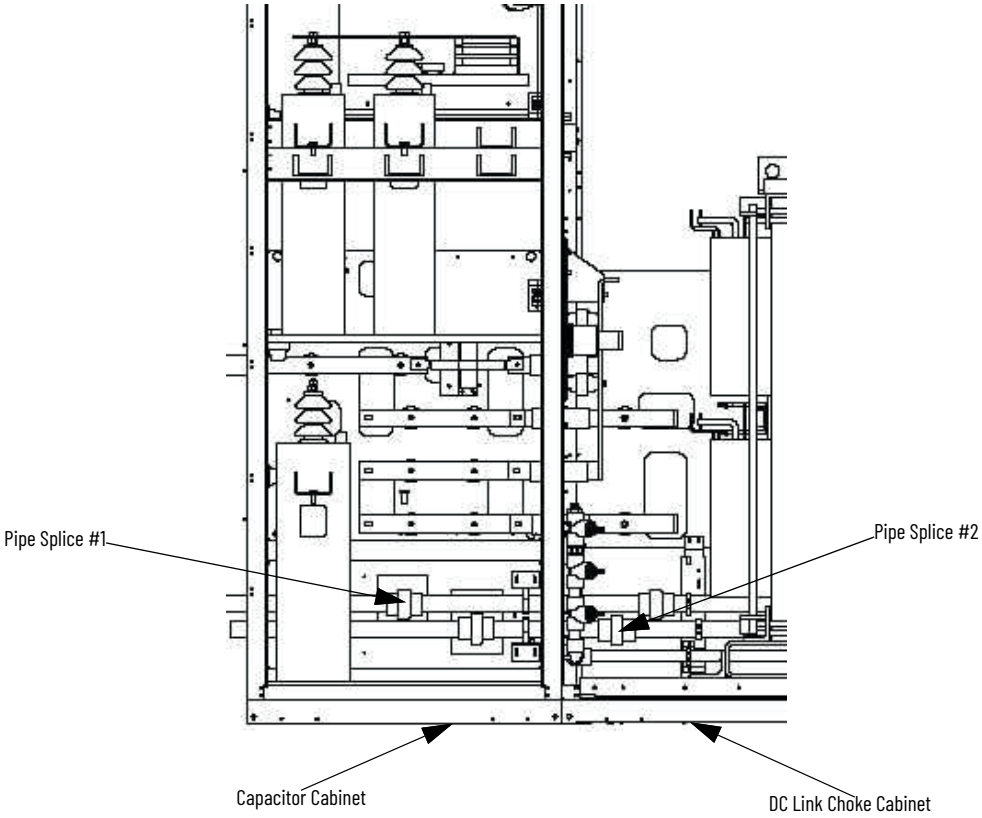

Figure 19 - Typical Strap Wrench (not supplied)

Figure 20 - Capacitor Cabinet and DC Link Choke Cabinet after Pipe Splices installed

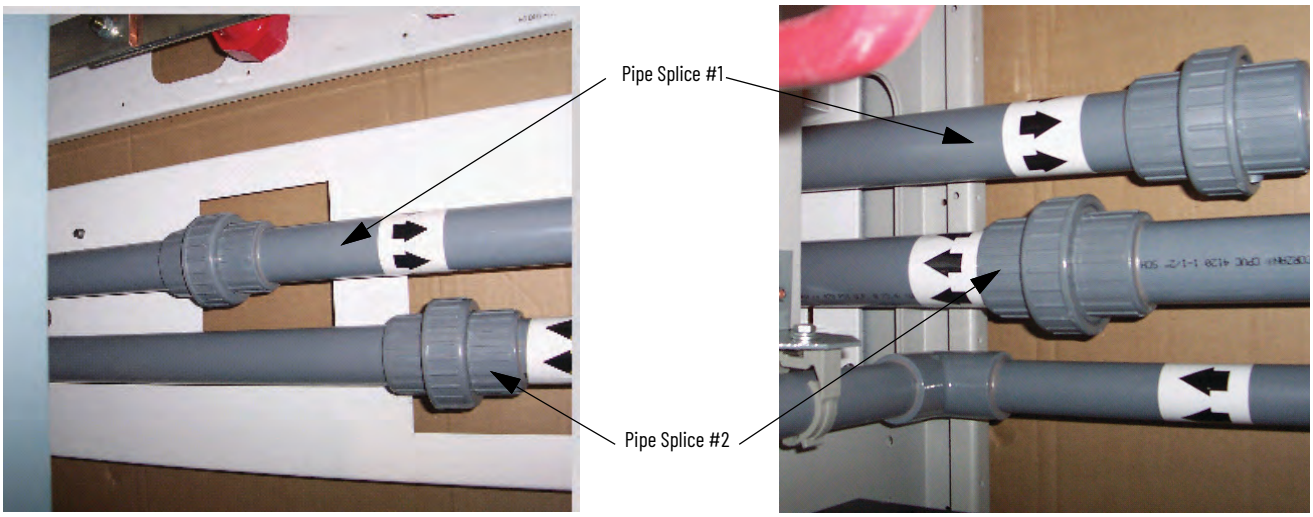

Capacitor Cabinet after pipe splices installed

DC Link Choke Cabinet after pipe splices installed

Install according to flow direction labels as shown.

Connect Power: M+, L+, M-, L- Power Bus

- Locate the four Power Bus pieces of the splice kit in DC Link Choke cabinet and remove shipping wrapping. See Figure 21.
- Connect Power Bus M+, L+, M-, L- on the red insulators in the DC Link Choke cabinet and mating bus pieces in the capacitor cabinet. The required hardware is preattached to bus connections, cabling, and insulators in the cabinet where the power bus splice kit attaches. Remove and attach as shown in Figure 21 to Figure 25.
- Torque M10 carriage bolts which connect the bus to bus in the capacitor cabinet to 29 N•m (21 ft•lb). Torque the M12 hardware that is supplied for cable to bus stab connections to 50 N•m (37 ft•lb).
- After cable connections have been made, the cable connections to choke stabs must be torqued to 50 N•m (37 ft•lb).
- Keep a minimum of 75 mm (3 in.) clearance between the medium voltage bus field connection (including hardware) and all cabinet sidesheets.

Figure 21 - DC Link Choke Cabinet Power Bus (four pieces); Ground Bus Shipped Disassembled

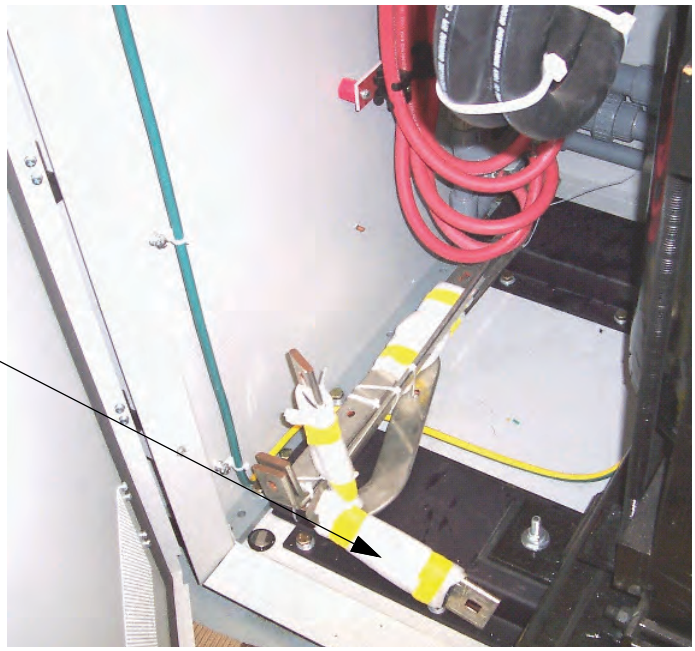

Figure 22 - DC Link Choke Cabinet *before* Field Power Bus Connections

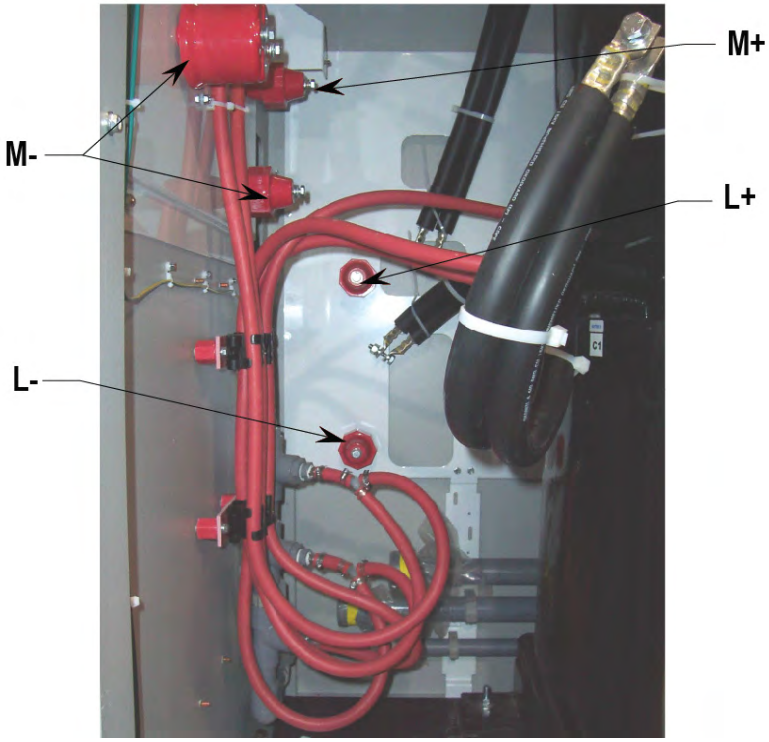

Figure 23 - DC Link Choke Cabinet after Field Connections of Power Bus

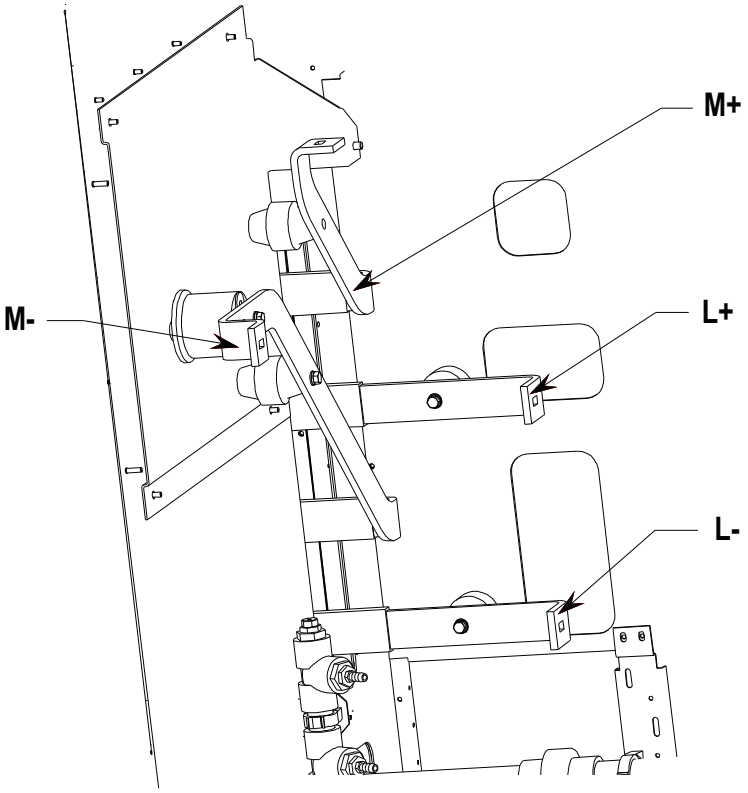

Figure 24 - Capacitor Cabinet after Field Connections of Power Bus

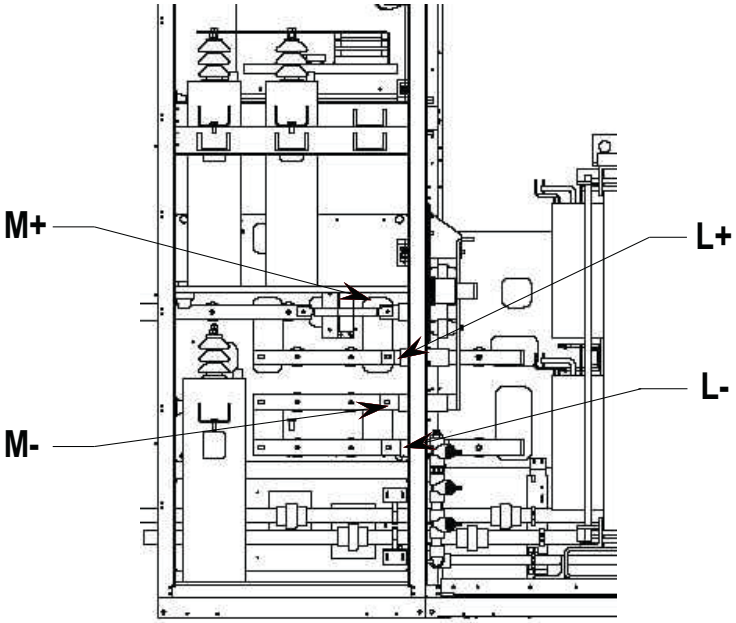

Figure 25 - Capacitor Cabinet (Connect Left Side of MV Bus Pieces with M10 Hardware)

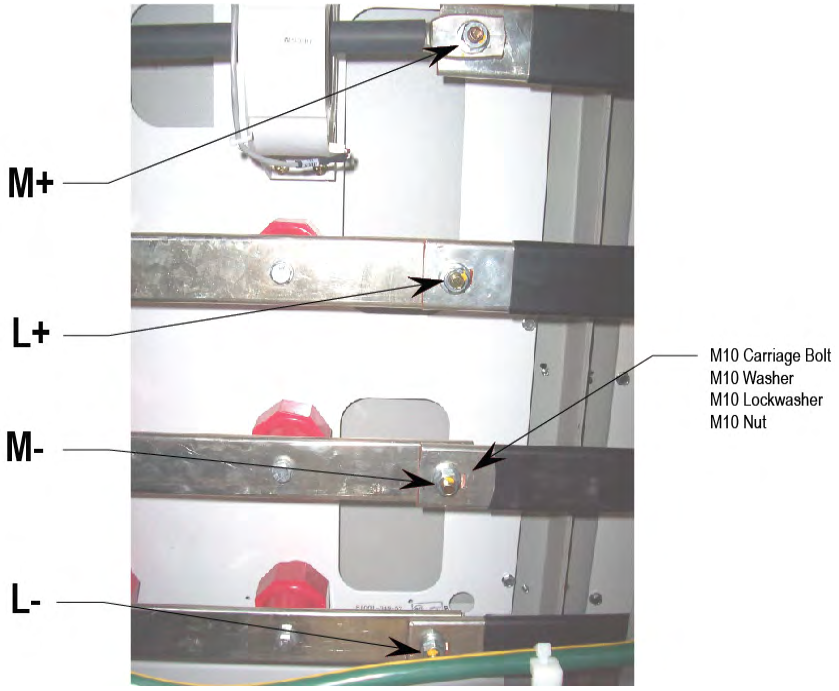

- Connect cables from DC Link Choke to MV Bus pieces using supplied M12 hardware.

Figure 26 - DC Link Choke Cabinet after Connection of Cables from DC Link Choke to Red Insulators

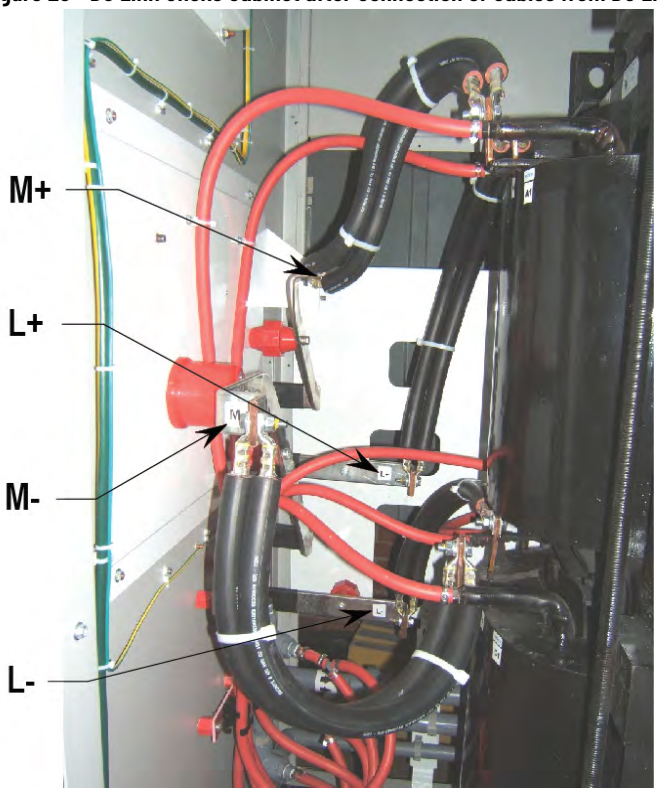

- Connection points are labeled on bus and DC Link Choke. Connect cables from labeled stabs M+, L+, L-, L+ on DC Link Choke to corresponding labeled stabs M+, L+, M-, L+ on bus.

Figure 27 - DC Link Choke Cabinet Typical Cable Connection

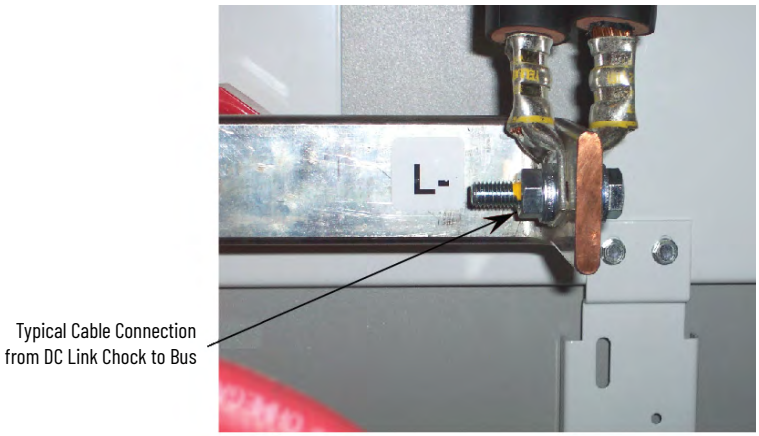

- Connect the Ground Bus Link from the top left of DC Link Choke cabinet to the ground bus in the adjacent capacitor cabinet by sliding underneath wire duct. Use the supplied hardware.

Figure 28 - Ground Bus Link

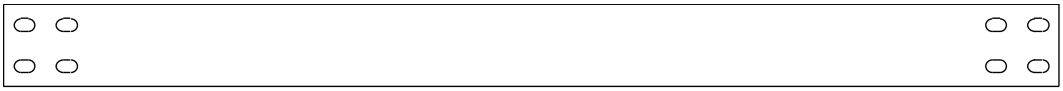

Figure 29 - Install Ground Bus Link

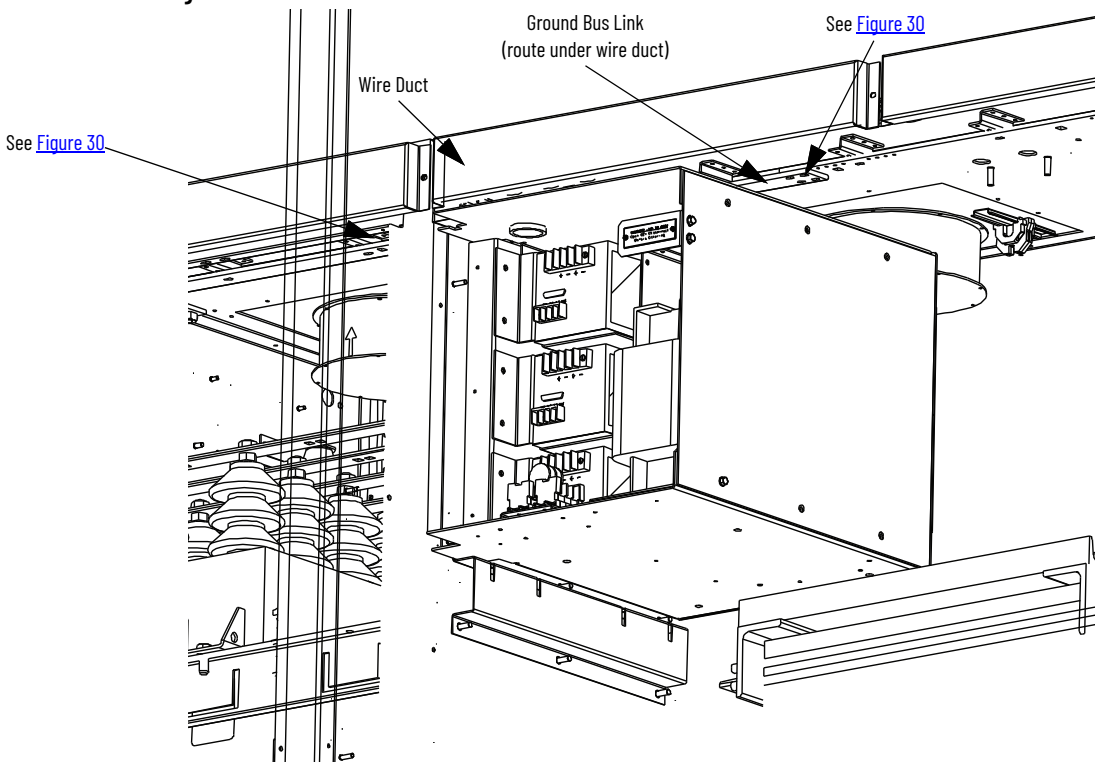

Figure 30 - Ground Bus Connection Points (Install Ground Bus Link using Supplied Hardware)

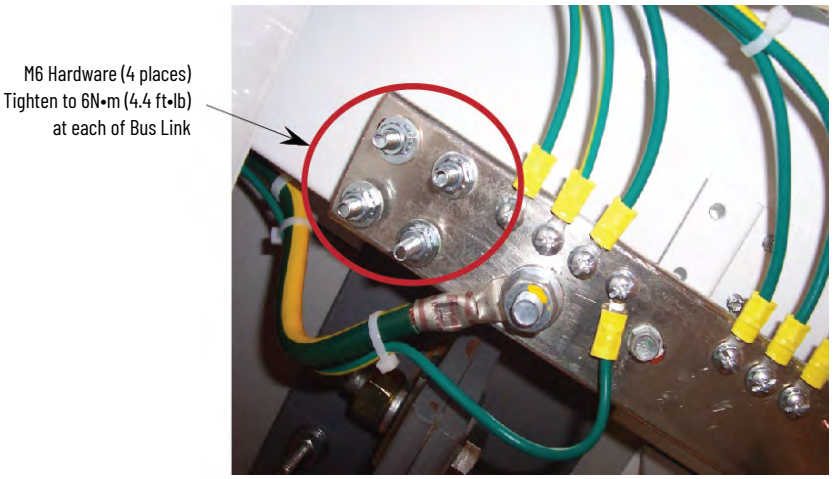

Control Wiring Connections

See the EDs and wiring diagrams that are supplied with the drive. Contact Rockwell Automation representative for assistance. Rockwell Automation field service representatives must perform the final wiring connections.

1. Remove the wireway covers on top of the line and motor filter capacitor sections and the DC Link section.
2. If drive has strip heater wiring, it is coiled up in the top wireway. Route these wires through the grommeted cutout to connect on the terminal blocks in the upper left side of the capacitor section.

Figure 31 - Strip Heater Terminal Block

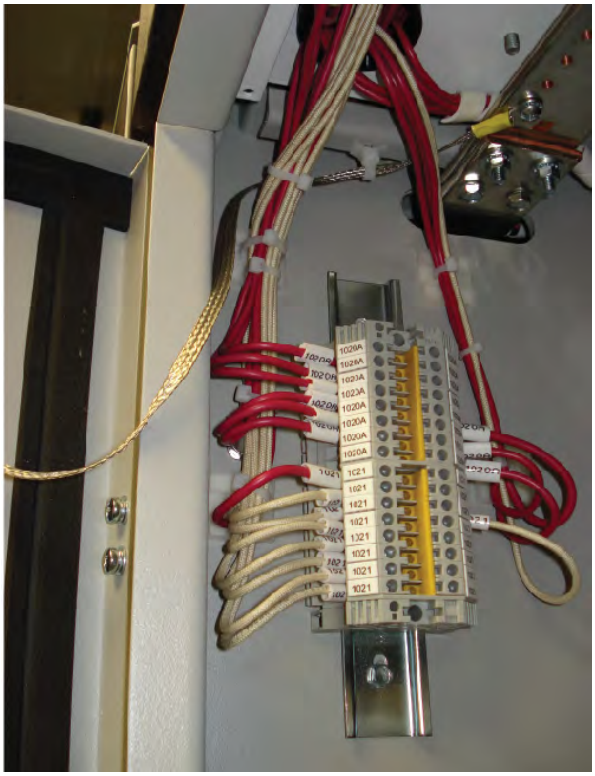

3. Route the control wiring back up through the two grommeted cutouts into the wireway. Do not damage the fiber optic cable in this bundle. The fiber optic cable, control power wires, and the "XIO link" cable will be required in the pump control cabinet.

Figure 32 - Control Wiring

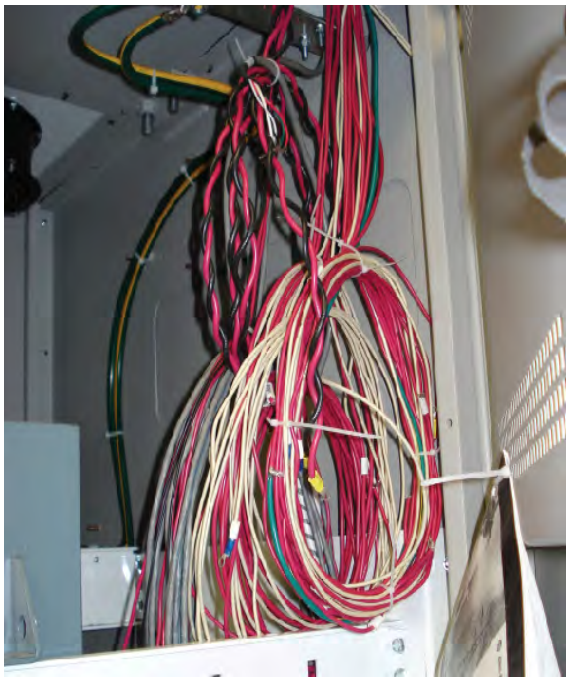

4. Route the eight gauge black and red twisted pairs of wire and the Belden shielded cables through the grommeted cutout in the AC\DC power supply section.

Figure 33 - Belden Shielded Cables

5. Route three fan control wires and two cabinet over-temperature control wires through the grommeted cutout in the center of the DC choke section (Figure 34).

Figure 34 - Fan Thermostat Control Wires

6. Route the control wires through the grommeted cutout into the control power disconnect section (Figure 35).
7. Connect the numbered wires to the corresponding numbered terminal blocks (Figure 36 to Figure 39).

Figure 35 - Route Control Wires through Grommeted Cutout

8. See the electrical drawing and make the above control wiring connections.

Figure 36 - 56V DC Connections

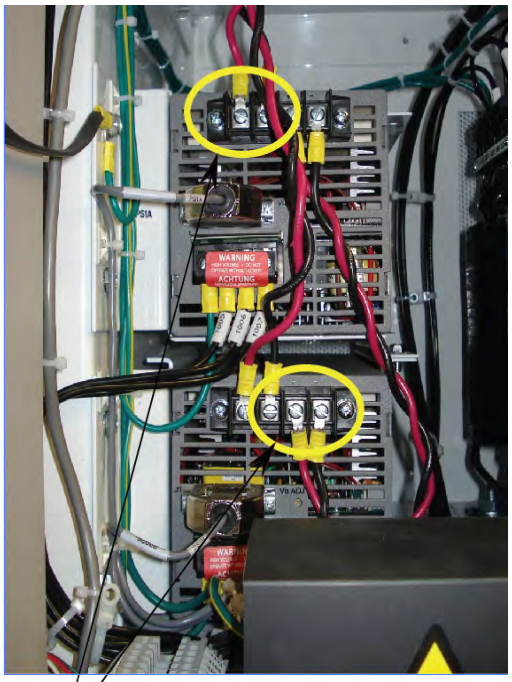

56V DC Connections
Red - Positive
Black - Negative

Figure 37 - AC DC fails Belden Cable Connection

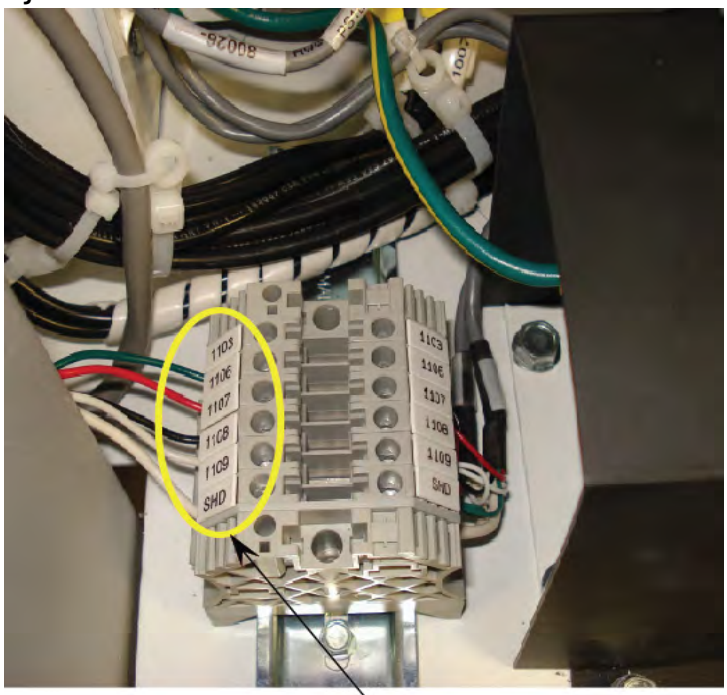

ACDC fails Belden cable connections

Figure 38 - Control Wire Power Connections

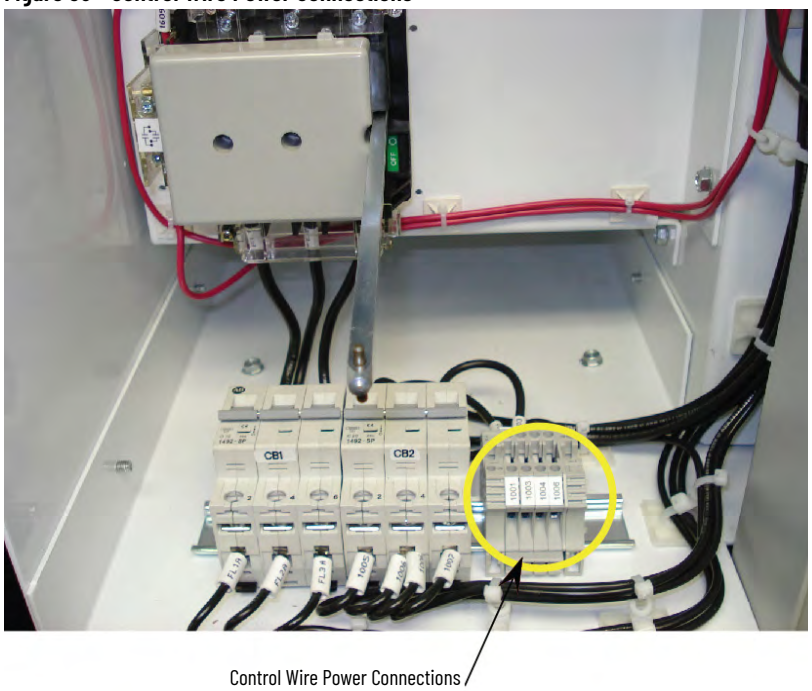

Figure 39 - Thermostat and Fan Connections

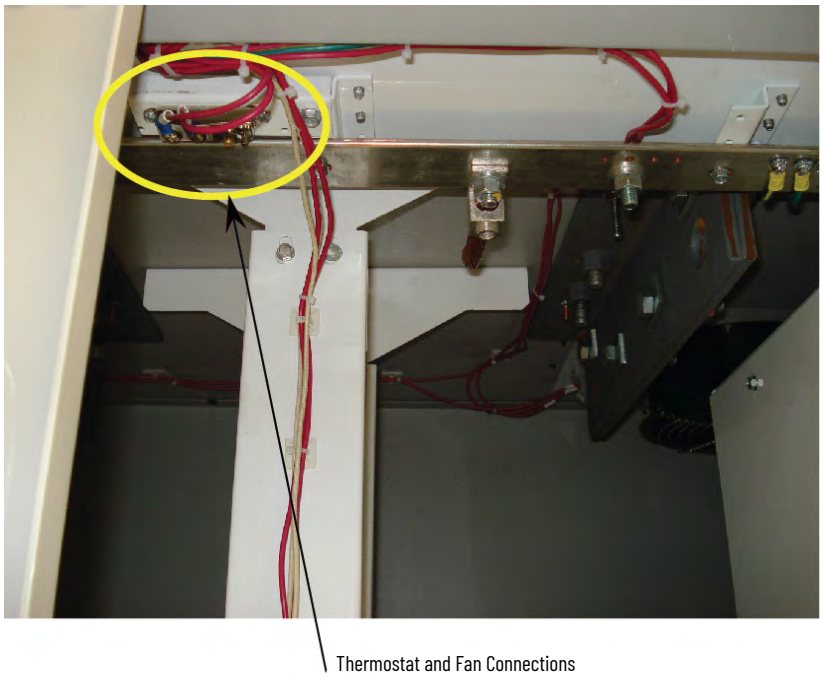

9. Once the connections have been made and neatly routed in each section, the excess control wires can be looped up in the top wireways.
10. Swing out the control section in the pump control cabinet.
11. Route the XIO link cable, control power wires, and the fiber-optic cable down through the wireways grommeted cutout.
12. Route the XIO link cable, the control power wires into the pump control cabinet through the upper side grommeted cutout.
13. Route the fiber-optic cable into the pump control cabinet through the lower side grommeted cutout.

Figure 40 - 120V and XIO Cables through Upper Cutout

14. Connect the XIO link cable to the XIO board "XIO link A" connector. (Figure 41)
15. Connect the control power wires to the control power terminal blocks. See the Electrical Drawings for corresponding wire numbers and terminal blocks.
16. Connect the fiber-optic cable to the TFB board.

Figure 41 - XIO link Cable

Figure 42 - TFB Fiber Optic Cable

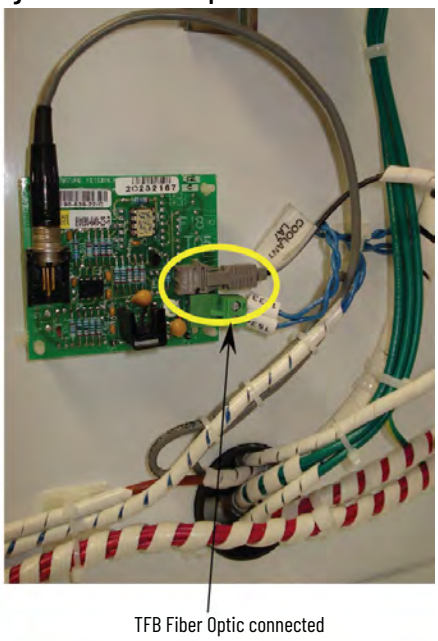

- Use supplied silicone (see Figure 43) to seal between cabinets to prevent moisture or dirt from entering. Join sidesheets with M6 Taptite thread forming screws in holes provided.

Figure 43 - Capacitor Cabinet

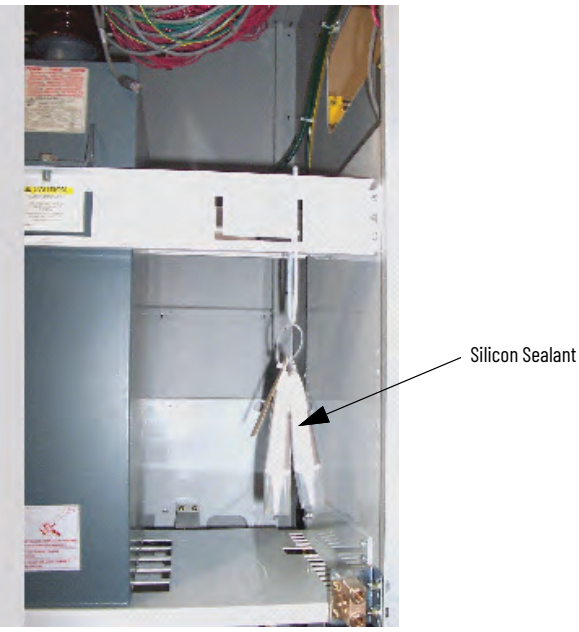

Removal of DC Link Choke Turnbuckle Supports

Remove turnbuckles which attach choke to top lifting angle pair as follows:

- Remove cotter pins (see Figure 44) from bottom turnbuckle jaw then top. Carefully remove turnbuckles. Retain for future use.

Figure 44 - Choke Cabinet

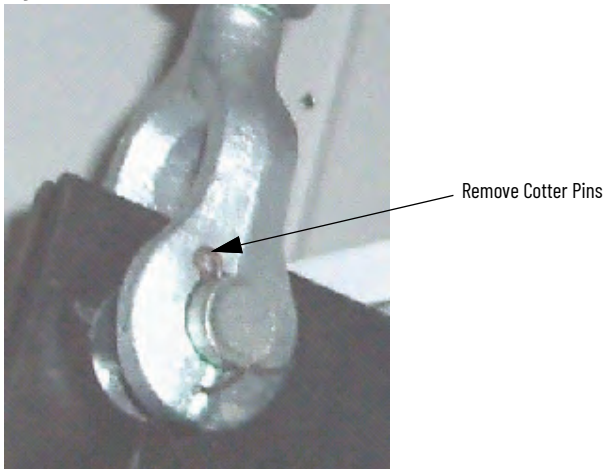

- Re-install any capacitors that were removed.
- Proceed with Removal of Lifting Angles.

Removal of Lifting Angles

Remove the lifting angles only when the drive is in its final location. The lifting angles are retained with 5/8 in. -11 hardware. The 5/8 in. bolts must be reinstalled in their holes in the top of the drive to prevent foreign matter in the enclosures. See Figure 45.

Figure 45 - Reinstall 5/8 in. -11 hardware

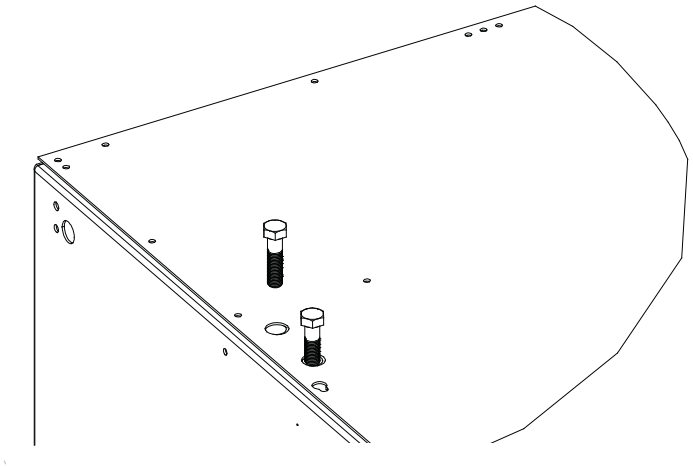

ATTENTION: Refer to the technical drawings and installation manual for your Drive mounting instructions. Failure to correctly anchor the cabinet may result in damage to the equipment or injury to personnel. Contact the area Rockwell Automation sales office if you do not have these documents.

Shock Indication Labels

Shock indication labels are devices that permanently record the physical shock to which equipment is subjected.

At the time of final preparation for shipment from the factory, a shock indication label is installed on the inside door of the converter cabinet.

During the shipping and installation process drives can inadvertently be subjected to excess shock and vibration which may impair its functionality.

When the drive has been placed in its installation area, open the converter door and inspect the shock indication labels.

The drive is shipped with a label that records shock levels in excess of 10G. If these shock levels have been attained, the chevron shaped window will appear blue in one of the two windows.

If these shock levels have been attained, record the values. There is a greater possibility of the drive having sustained internal damage if it has been subjected to physical shock during the shipping and installation process.

Even if the indicators show that no shock was attained, full inspection and verification in accordance with the commissioning process is still essential.

Figure 46 - Shock Indicator

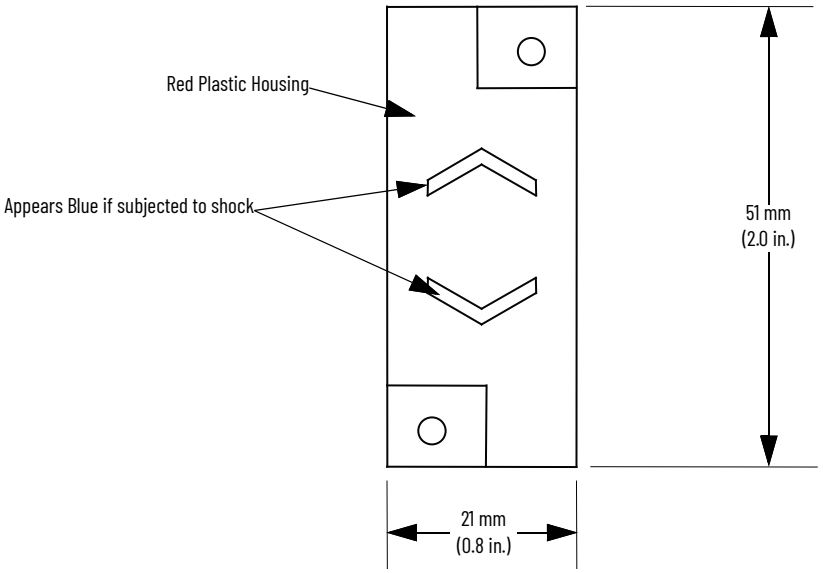

Installation of Exhaust Air Hood

Some sections of a liquid-cooled drive still require air circulation.

On the top of the cabinets with cooling fans, sheet metal exhaust hoods are to be installed. The exhaust hood components are packaged and shipped with the drive in the control/cabling cabinet.

Remove the protective plate covering the fan opening. It is a flat cover plate bolted to the top plate. Remove the bolts and plate and set aside.

Loosely assemble the two L-shaped panel components.

For AFE Rectifiers with a line reactor cabinet, there may be a provision for small fans in the roof of the cabinet. This cabinet will still have a full-size exhaust air hood.

Locate the exhaust hood on top of the cabinet (Figure 47) and reinstall the original cover plate. The notches on the bottom flange must be oriented toward the sides of the drive. Affix assembly to the drive top plate, and tighten all hardware.

ATTENTION: Any screws that are accidentally dropped in the equipment must be retrieved as damage or injury may occur.

Internally-mounted Fans

Capacitor cabinets have preinstalled internally mounted fans (refer to Figure 47). The customer only needs to install the fan hood.

Figure 47 - Fan Hood Installation (Internally Mounted Fans)

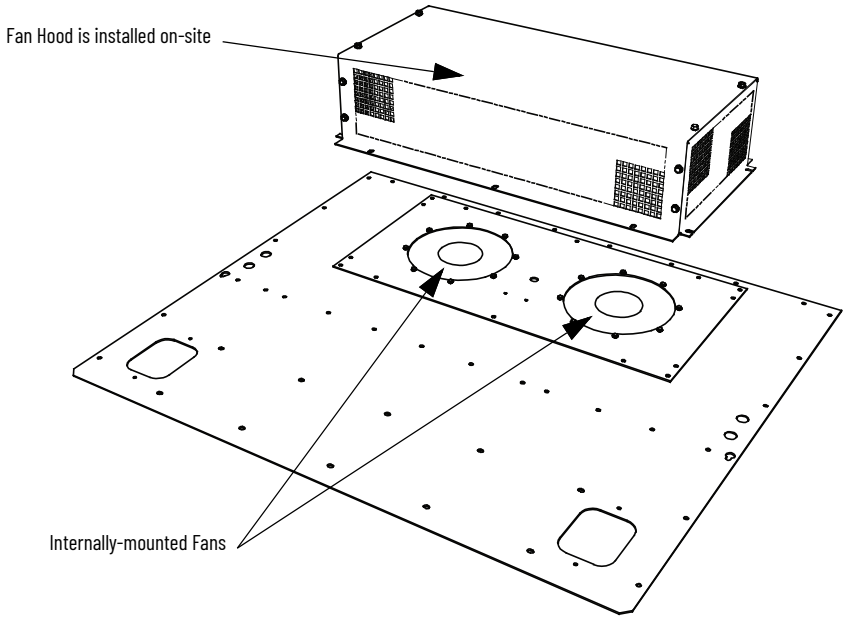

Externally-mounted Fans and Fan Hood

The converter has cooling fans that are externally mounted (Figure 48). It is necessary to reinstall and connect the fans, and install the fan hood.

Shipped with the drive is a plate with the fans mounted and wired to terminal blocks. On-site, mount the fan assembly on the top plate of the converter cabinet (Figure 48).

Wiring for fan power is to be routed through the hole near the terminal blocks. The plate is fastened to the cabinet with M6 hardware. Connect wires to the terminal blocks per the electrical diagram.

Position the fan hood over the fan assembly and fasten with M6 hardware.

Figure 48 - Fan Hood Installation (Externally-mounted Fans and Fan Hood)

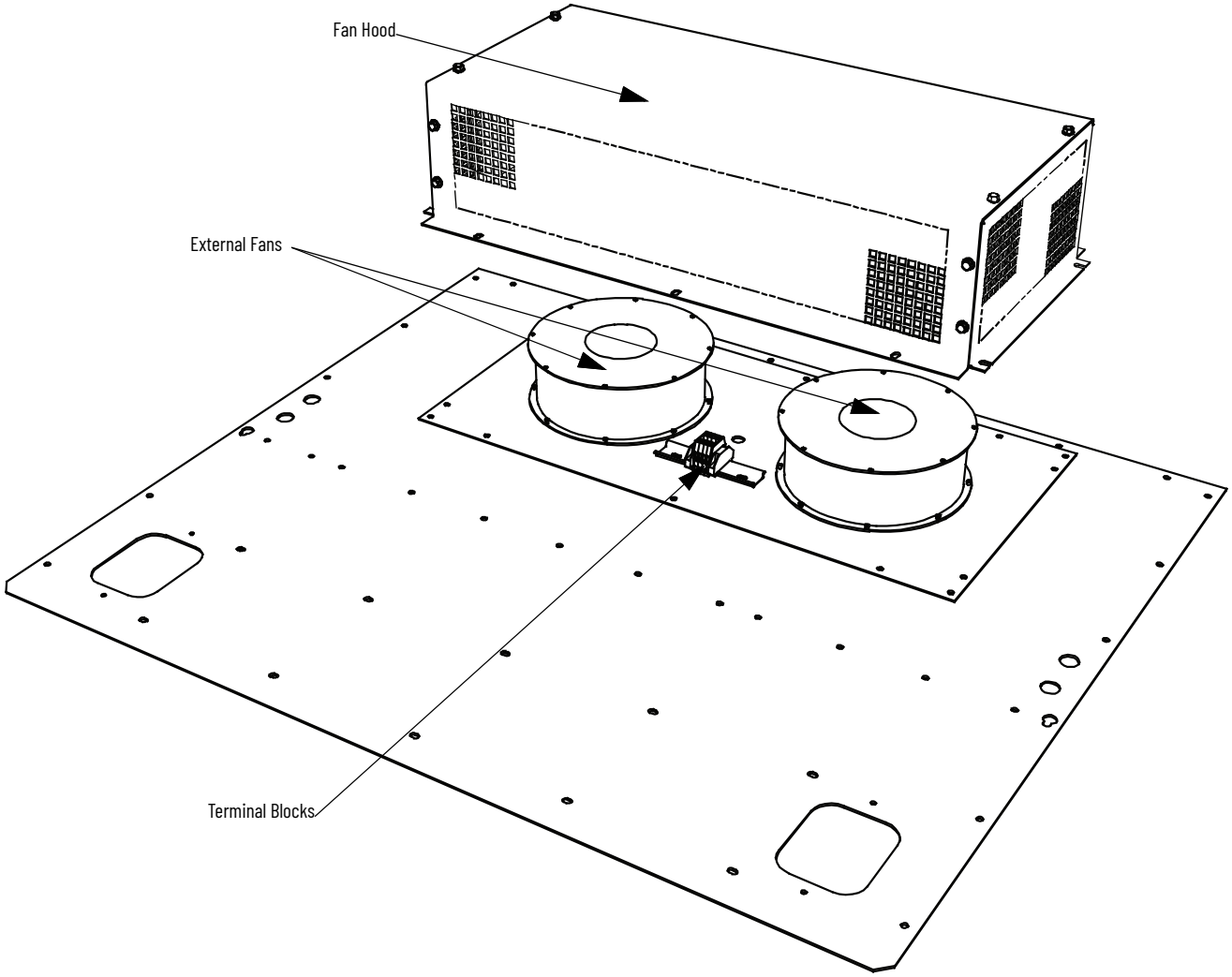

Typical PowerFlex 7000L Drive Structure Layout

Figure 49 - Typical PowerFlex 7000 "C" Frame Drive Structure Layout

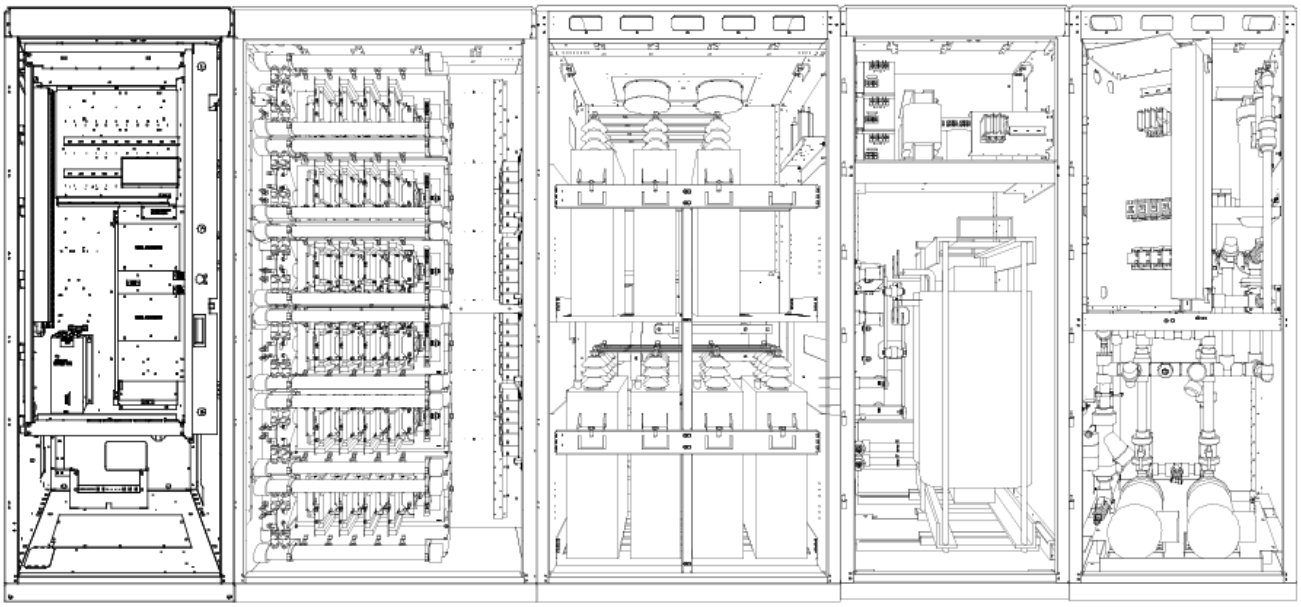

Control and Cabling Cabinet | Converter Cabinet | Capacitor Cabinet | DC Link Inductor Cabinet | Pump Cabinet

Control/Cabling Cabinet

Shows the medium voltage area located in the control/cabling cabinet behind the low voltage compartment and with barriers removed.

The control/cabling cabinet comes in two different configurations:

- AFE rectifier (Figure 71)
- 18-pulse rectifier (Figure 72)

Major Components

The following diagrams show the typical layout of each cabinet for PowerFlex 7000 “C” frame drives.

Figure 50 - Low Voltage Tub Compartment

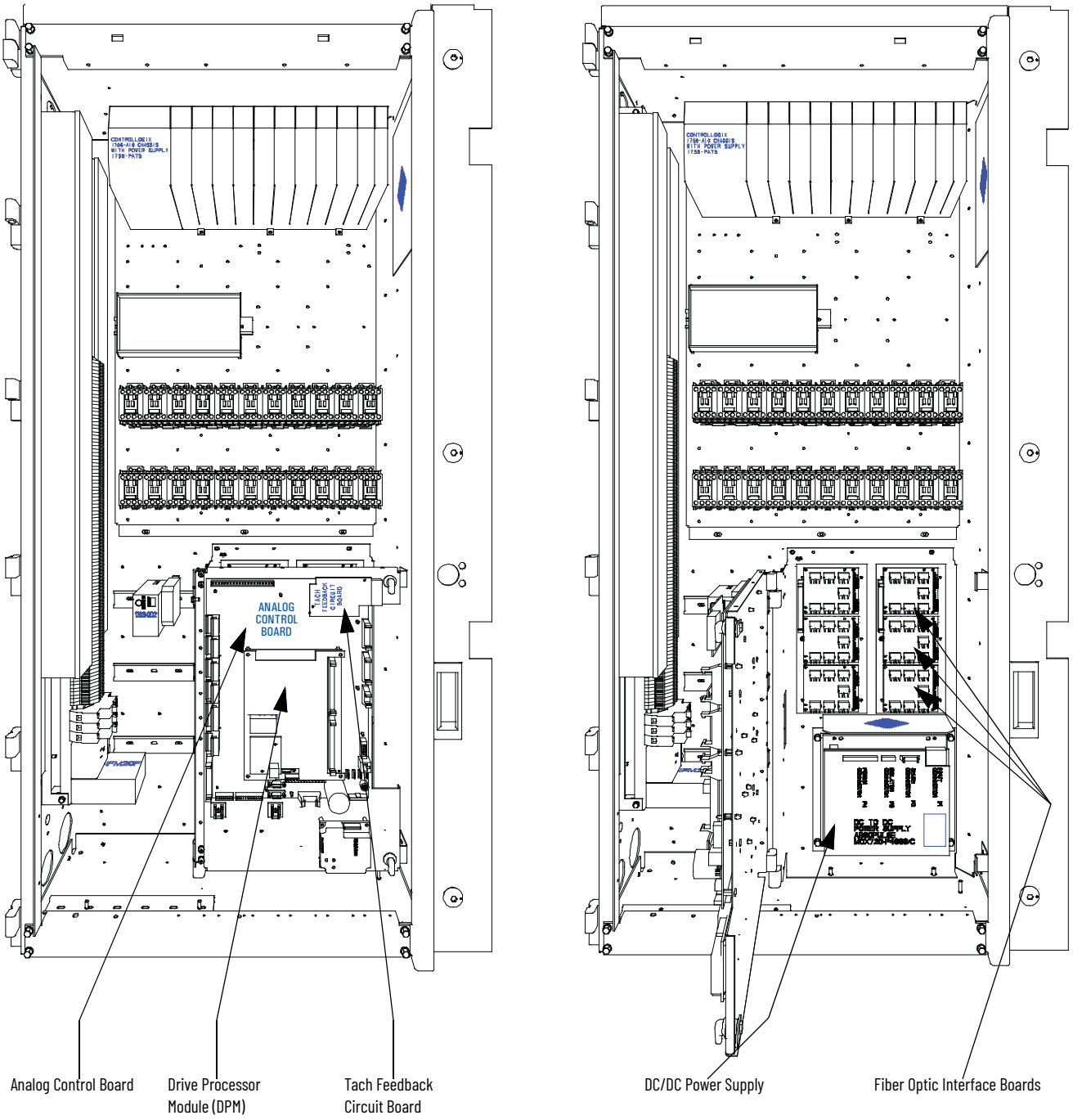

Figure 51 - Converter Cabinet (4160V AFE shown)

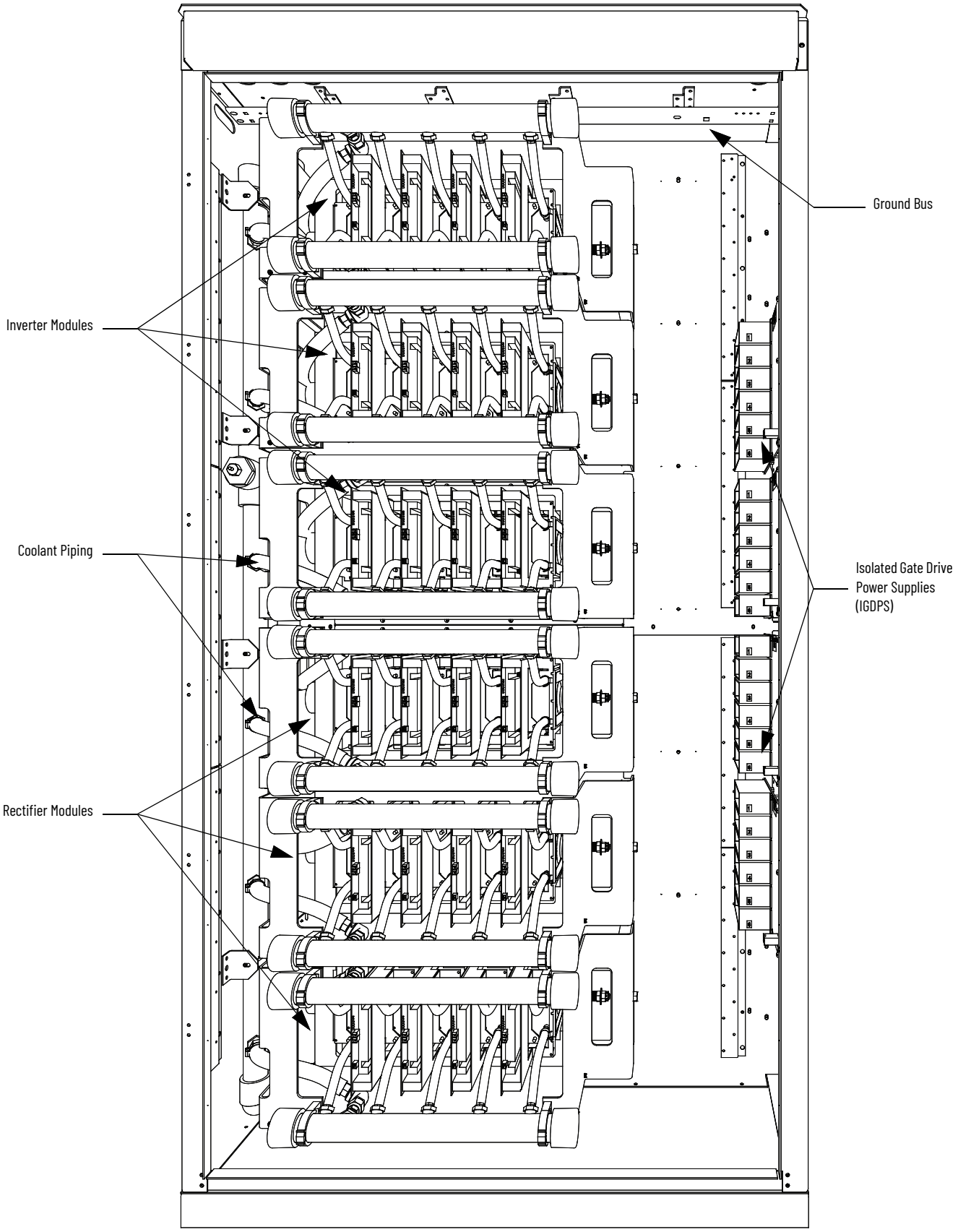

Figure 52 - Converter Cabinet (6600V AFE shown)

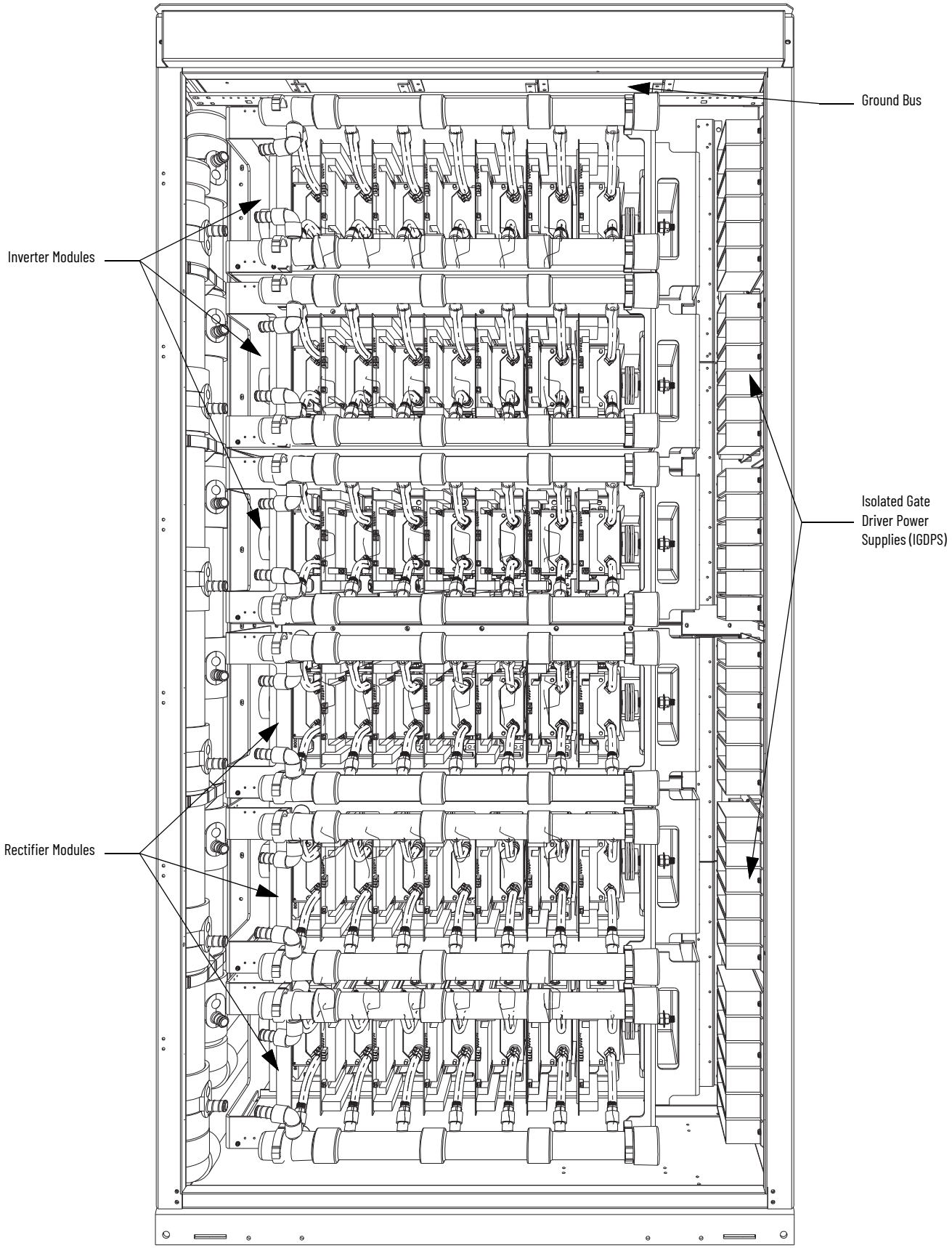

Figure 53 - Capacitor Cabinet

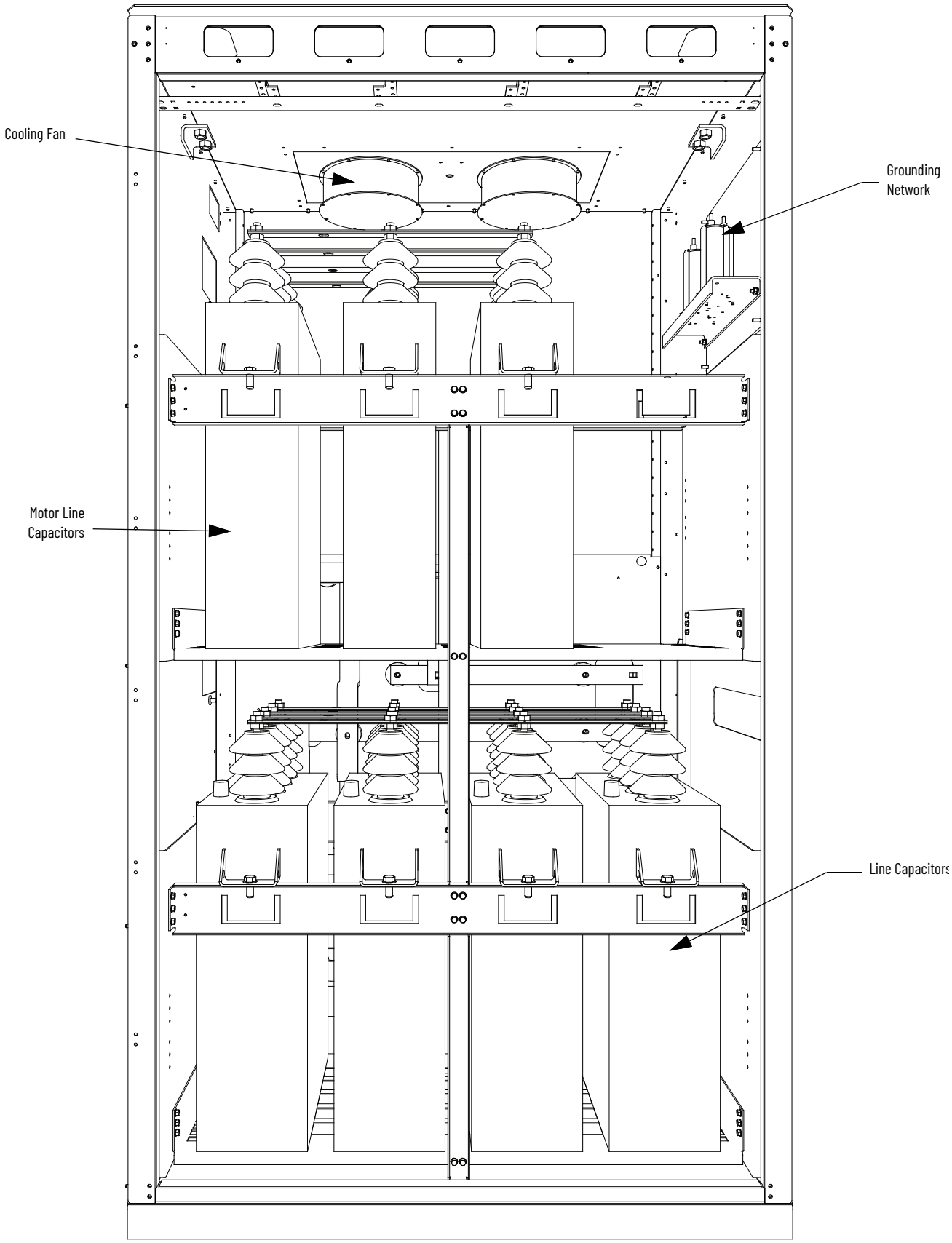

Figure 54 - Pump Cabinet (showing swing-out low voltage panel)

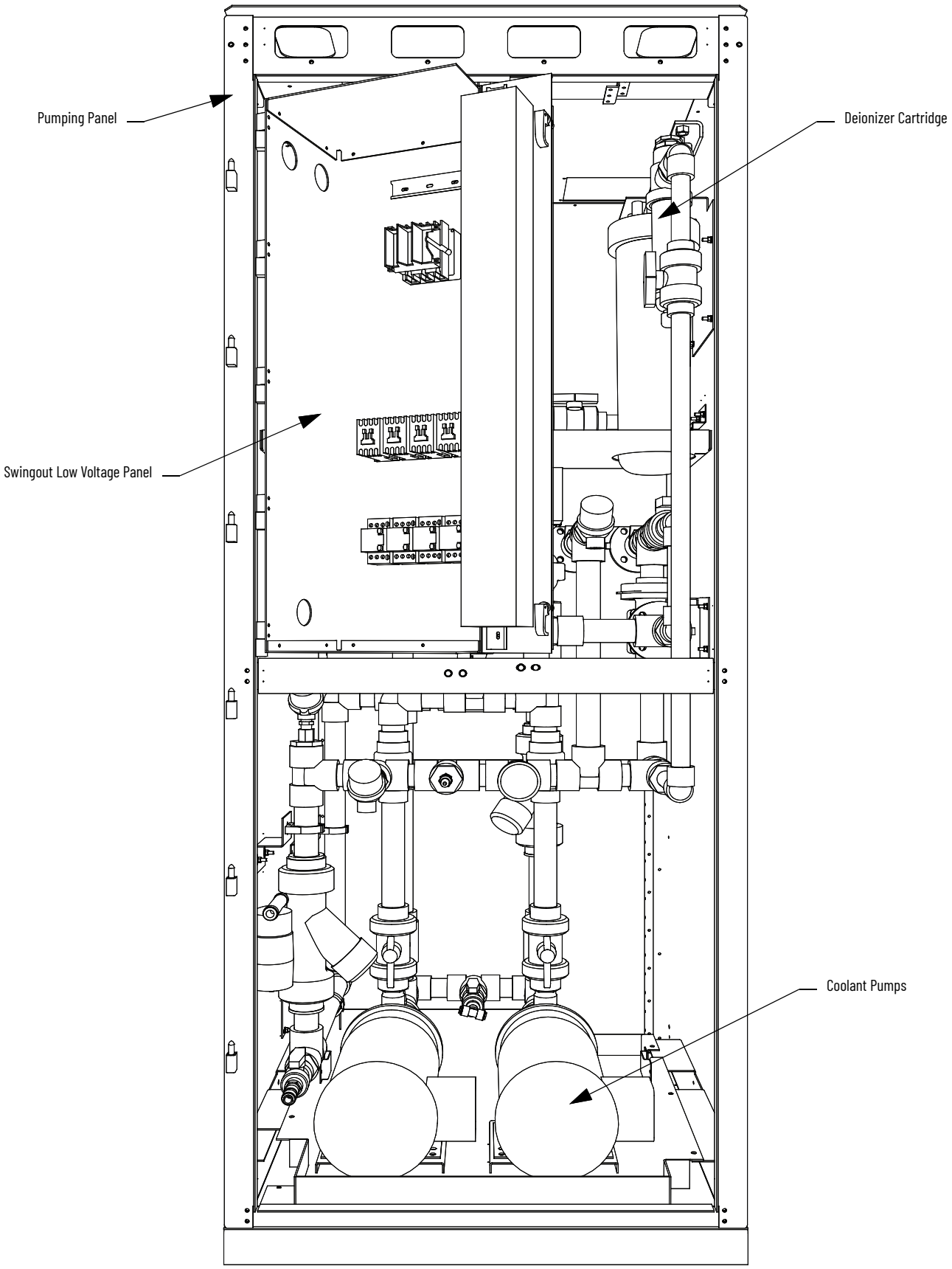

IEC Component and Device Designation

PowerFlex 7000L electrical drawings use conventions that are based on IEC (International Electrotechnical Commission) standards, while remaining basically compatible with North American ANSI (American National Standards Institute) standards. The symbols that are used to identify components on the drawings are international and a full listing of the symbols is given as part of each PowerFlex 7000 elementary drawing (ED) set. The device designations that are used on the drawings and labels are also listed with explanations on each drawing set.

Wiring identification uses a source/destination wire number convention on point-to-point multi-conductor wiring and in situations where the system is warranted. The wire-numbering system of unique, single numbers for multi-drop and point-to-point wiring continues to be used for general control and power wiring. Wiring that connects between the sheets or that ends at one point and starts at another point on a drawing has an arrow and drawing reference to indicate the ongoing connection. The drawing reference indicates the sheet and the X/Y coordinates of the continuation point. The reference system is explained on a sheet in each drawing set. The unique wire numbering system serves as confirmation that the correct wire is being traced from sheet to sheet or across a drawing. Wires in multi-conductor cables are typically identified by color rather than by number. The abbreviations that are used to identify the colors on the drawings are fully identified on a sheet in the drawing set.

Power Cabling Access

The drive is built with provisions for either the top or bottom power cable entry.

Cable access plates are provided on the top and bottom plates of the connection cabinet identified by the customer specific dimension drawing.

Access the Customer Power Cable Terminations

- Open the door of the low voltage control compartment. The low voltage control compartment is hinged on its left side. The power terminals are behind the low voltage control compartment.
- There is a key interlock to prevent swinging the low voltage control compartment open unless the medium voltage source is locked out.
- Turn each of the three latches on the right side of the low voltage compartment one-quarter turn using an 8 mm hexagonal key wrench. There is a pull handle provided on the right side of the low voltage compartment.
- Slowly pull the handle so that the low voltage compartment swings out. The power terminals are now visible.
- The installer is responsible for modifying the power cable access plates to suit the requirements.
- Use appropriate connectors to maintain the environmental rating of the enclosure.

Figure 55 - Swing-out of Low Voltage Compartment

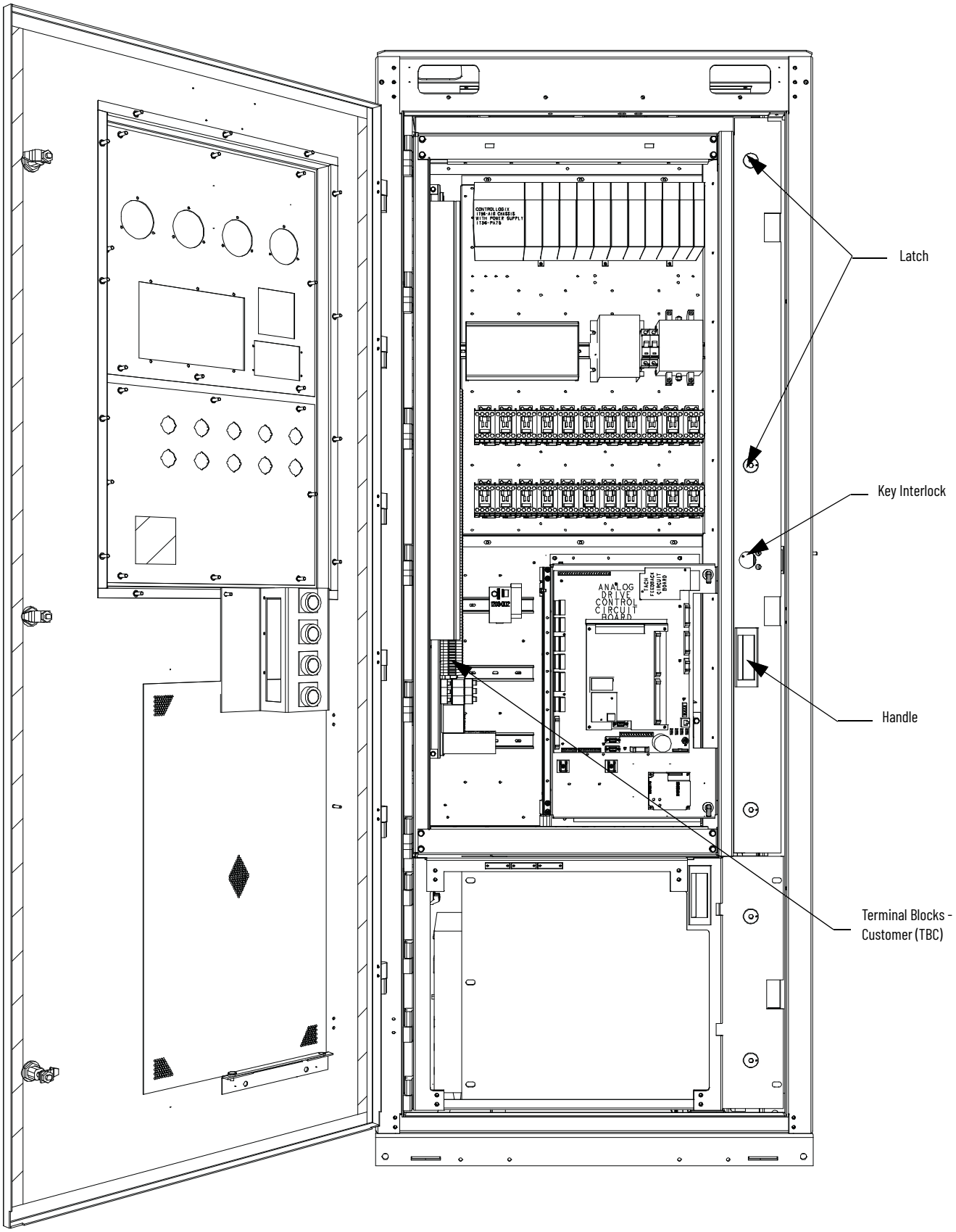

Figure 56 - Access to Power Terminals

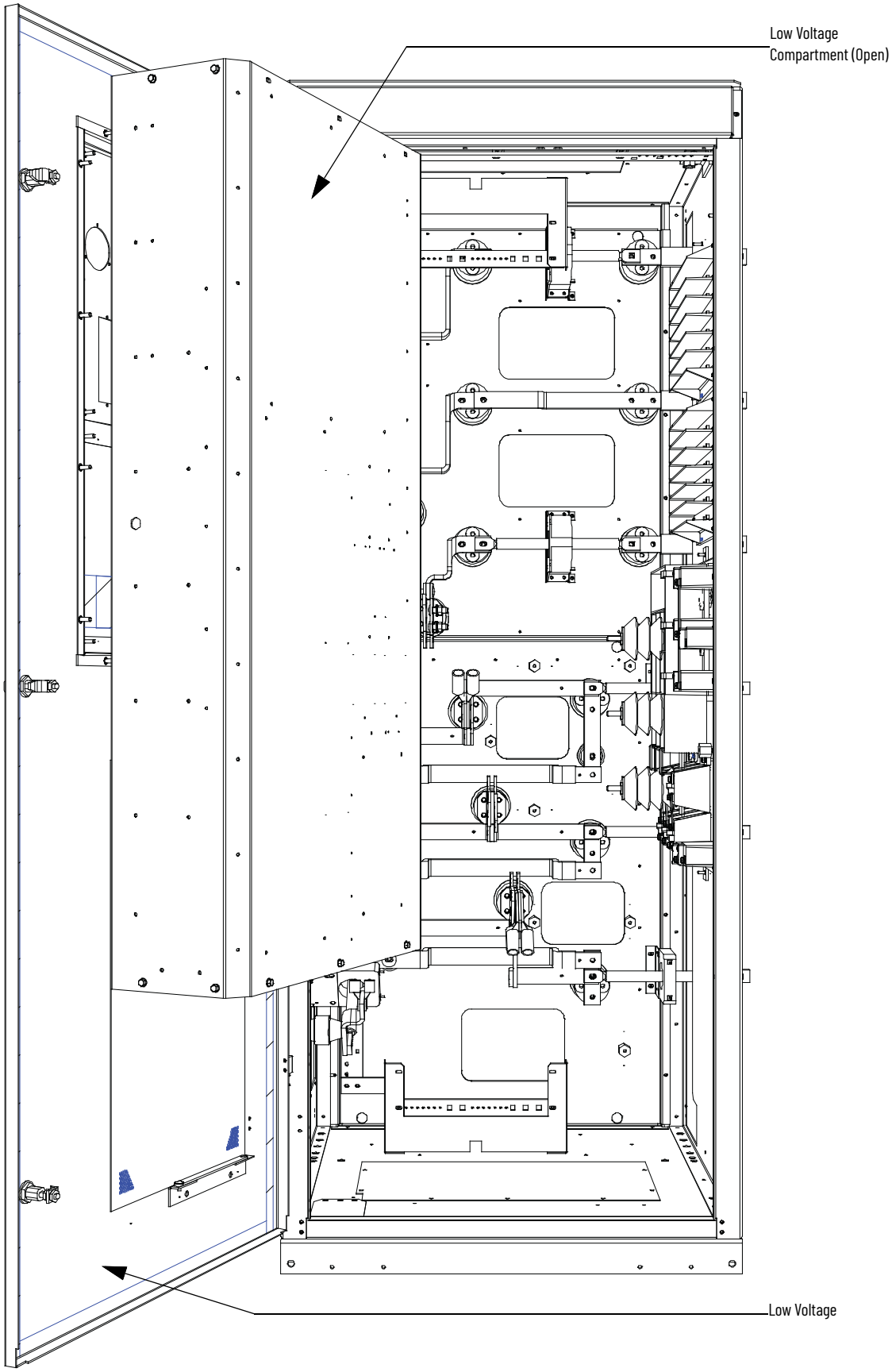

Power Connections

The installer must verify that interlocking with the upstream power source has been installed and is functioning.

The installer is responsible for verifying that power connections are made to the equipment in accordance with local electrical codes.

The drive is supplied with provision for cable lugs. The power terminals are identified as follows:

Incoming Connections

- Drives with AFE rectifiers: 2U, 2V, 2W
- Drives with 18-pulse rectifiers
  - Secondary (d0): 2U, 2V, 2W
  - Secondary (d-20): 3U, 3V, 3W
  - Secondary (d+20): 4U, 4V, 4W
- Motor connections: U, V, W

The installer is responsible for verifying that power connections are made with appropriate torque. See Torque Requirements on page 213.

The drive is supplied with provision for grounding of cable shields and stress cones near the power terminals.

Liquid Connections

Liquid-to-Air Heat Exchangers

There are three options for routing piping between the liquid-to-air heat exchanger and the pumping cabinet of the drive:

- Pipes through top plate of cabinet
- Pipes through bottom plate of cabinet
- Pipes through right side of cabinet

Removable plates are provided in each of these locations.

Figure 57 - Connection to Liquid-to-Air Heat Exchanger (Rear of Cabinet, Back Plates Removed)

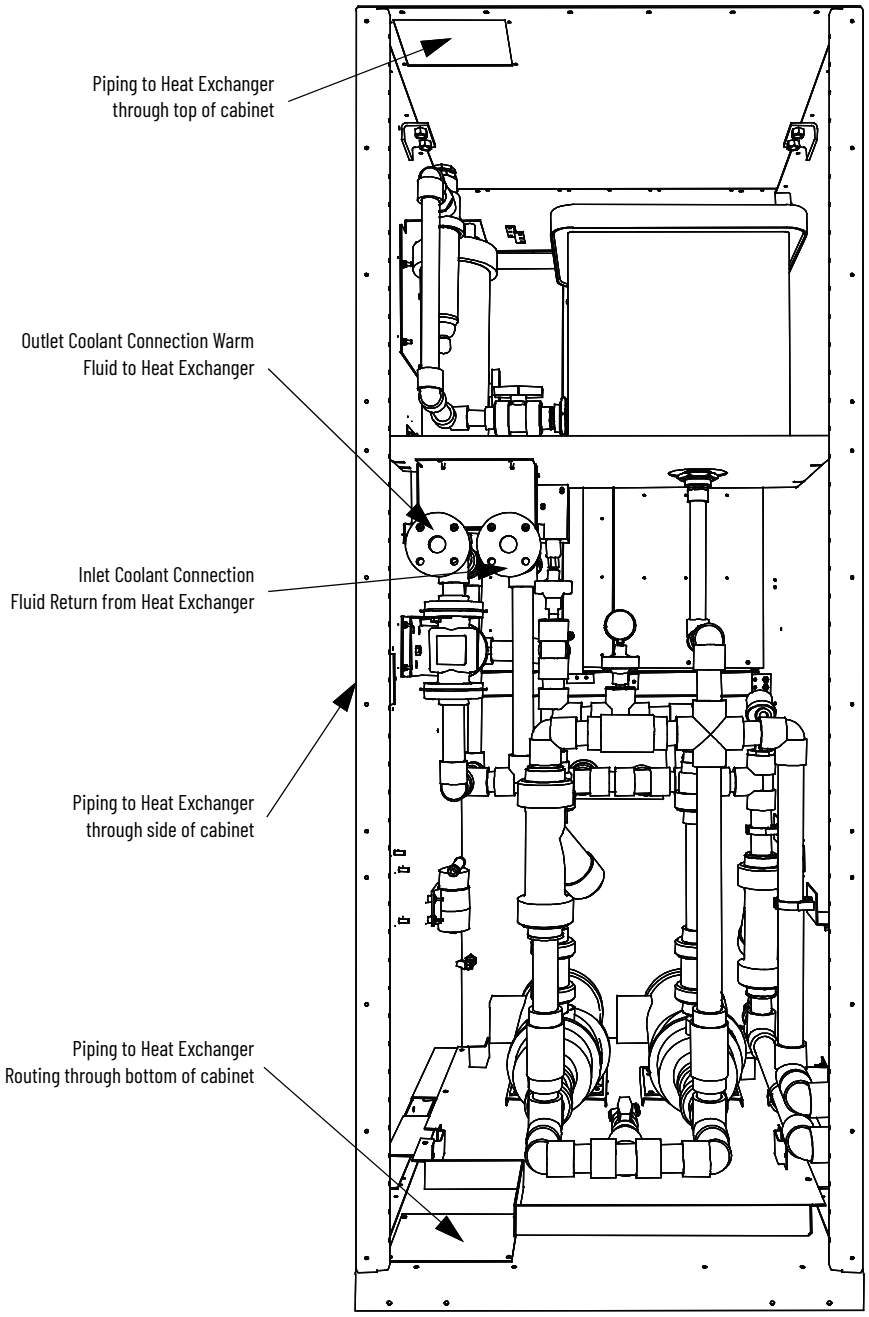

Pipe Materials and Layout

All material that contacts fluid between the heat exchanger and drive must be either Schedule 80 CPVC or stainless steel. Rockwell Automation recommends using stainless steels AISI 304L or 316L to connect the drives to heat exchangers. Use 304L and 316L welding wire to avoid sensitization of the welded material. Sensitization due to incorrect welding causes localized corrosion of the welded area. Pressures that are expected within a drive are below 75 psi with test pressures of 110 psi.

Schedule 80 CPVC piping can be installed within a climate controlled building with any outside pipe of stainless steel. Shield CPVC from direct sunlight to prevent UV damage. Use expansion loops for long pipe runs.

See document CTS-3 "CPVC CTS Products Design and Installation Manual" from Spears Manufacturing Company (www.spearsmfg.com) for more information.

Figure 58 - Piping to Heat Exchanger (can vary with Heat Exchanger)

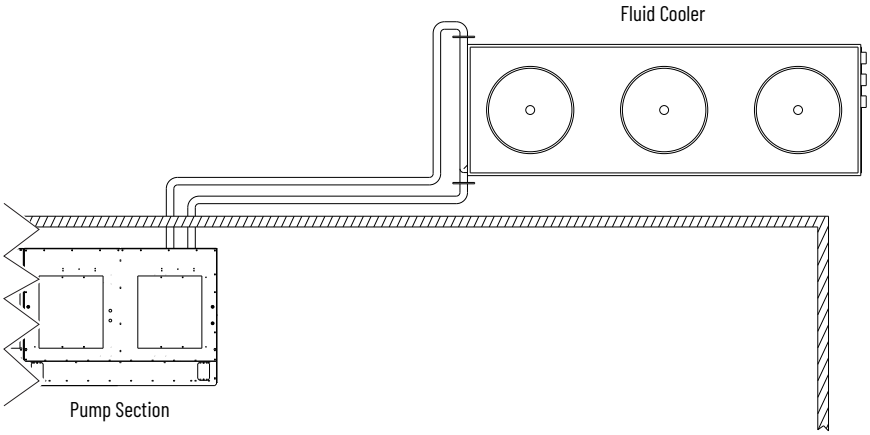

Exit flow from the pump cabinet must be routed to the inlet flange of the exchanger.

The estimated flow rate and pressure is printed on the cooling system schematic, which is posted on the inside of the pumping cabinet door.

The pipes to which connections are made are Schedule 80 CPVC: 38 mm (1.50 in.) or 50 mm (2.00 in.).

Figure 59 - Drive CPVC Class 150 Flange, 38.1 mm (1.5 in.) (ANSI B16.5; ASTM D4024)

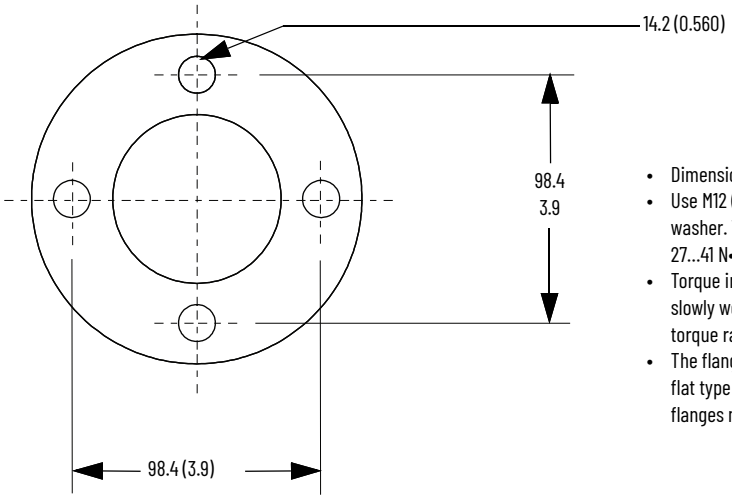

- Dimensions in mm (in.)
- Use M12 (0.5 in.) bolt with washer. Torque to 27...41 N•m (20...30 lb•ft)
- Torque in a cross pattern, slowly working toward torque rating
- The flange used must be a flat type flange. Raised flanges may break.

Figure 60 - Drive CPVC Class 150 Flange, 50.8 mm (2 in.) (ANSI B16.5; ASTM D4024)

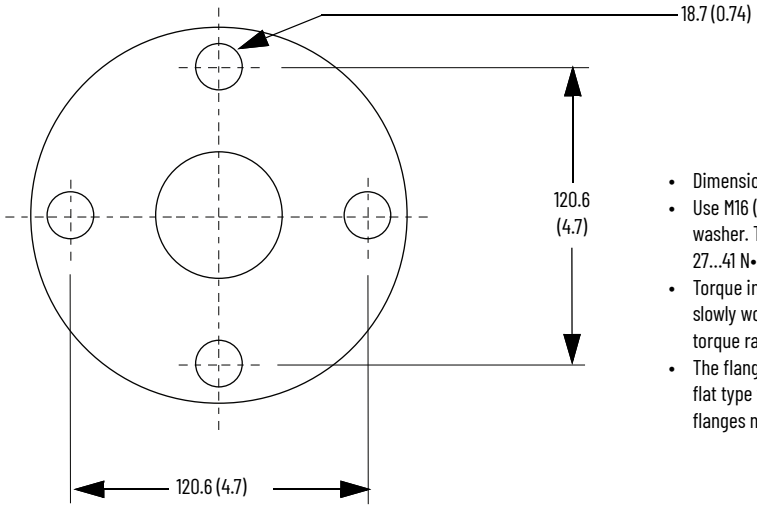

- Dimensions in mm (in.)
- Use M16 (5/8 in.) bolt with washer. Torque to 27...41 N•m (20...30 lb•ft)
- Torque in a cross pattern, slowly working toward torque rating
- The flange used must be a flat type flange. Raised flanges may break.

External Piping to the Drive

External Piping Cleaning

Rockwell Automation liquid-cooled drive piping and heat exchangers are flushed and cleaned at the factory and piping is capped to prevent contamination. Leave the drive pipe caps installed until final assembly.

Use stainless steel capped piping and valves to maintain cleanliness before welding or assembly. Store parts in a clean, dry area.

All external piping must be cleaned and flushed before installation to achieve proper coolant system and drive pump operation.

Before Welding or Assembly:

- Remove debris, particulate, oils, and greases from inside pipes and valves before welding.
- Use a high-pressure water spray to remove debris and particulate from pipes and valve.
- Remove oils and greases with solvents.

Finished Pipe System

1. Circulate hot water with industrial detergent through external piping system only for at least 4...8 hours. Maintain a water temperature of 60...71 °C (140...160 °F). Do not circulate through the drive piping.
2. Circulate clean hot water until the effluent is clear.

   Do not allow oils, greases, solvents, cleaning detergents or other cleaning agents to contact or enter the drive piping as this may cause stress cracking of CPVC piping.

See ASTM A 380-06 “Standard Practice for Cleaning, Descaling, and Passivation of Stainless Steel Parts, Equipment, and Systems” for additional information.

Controlled Siphon into Open-top Reservoir

Rockwell Automation recommends this method of pipe routing for pipes and heat exchangers higher than the reservoir coolant level. The reservoir is located in the VFD pump cabinet. This method controls the siphoning of coolant into the open top reservoir when the coolant pumps are off for maintenance. It prevents the siphoning of all pipes higher than the reservoir liquid level, causing reservoir overflow. Siphoning occurs only when both pumps are off.

1. Verify that the vertical pipe from drive to vent valve is the same size (1.5…2.0 in.) as the main VFD pipe. The rear outlet flanges may be 1.5…2.0 in. size. Keep the vertical pipe this exact size to maintain minimum coolant siphon flow into reservoir. Add 1.5 in. Ball Check Valve (Rockwell Automation Part 80025-750-01, Flow Coefficient Cv 80 or equivalent) into vertical exit piping. Increase pipe size to 2 in. or 3 in. respectively for the remainder of the pipe circuit.
2. Vents to the top of the reservoir may be 1.0 in. CPVC pipe or PVC hose. The end shall not be immersed into the reservoir coolant. To allow leakage flow, cut a hole into the top of the reservoir.

   Vent valve ARV100VS-CP may be obtained from www.plastomatic.com.
3. Fill heat exchanger and pipe using fill line and main VFD piping before starting pump to purge air. Do not let the pumps run dry as damage may occur. Follow priming and valve operation instructions located on the pump cabinet door before operating the pumps.

Figure 61 - Controlled Siphon Method

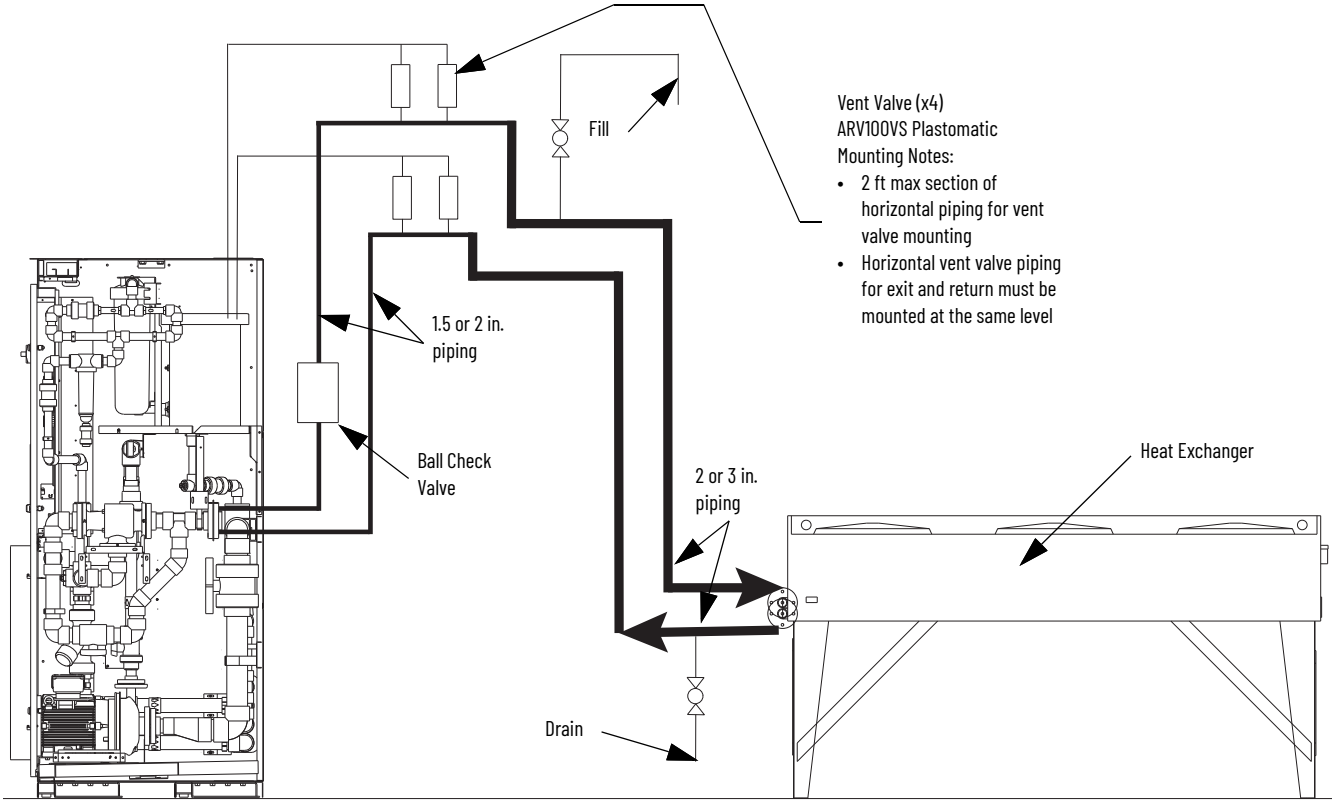

Figure 62 - Controlled Siphon Method with Elevated Heat Exchanger

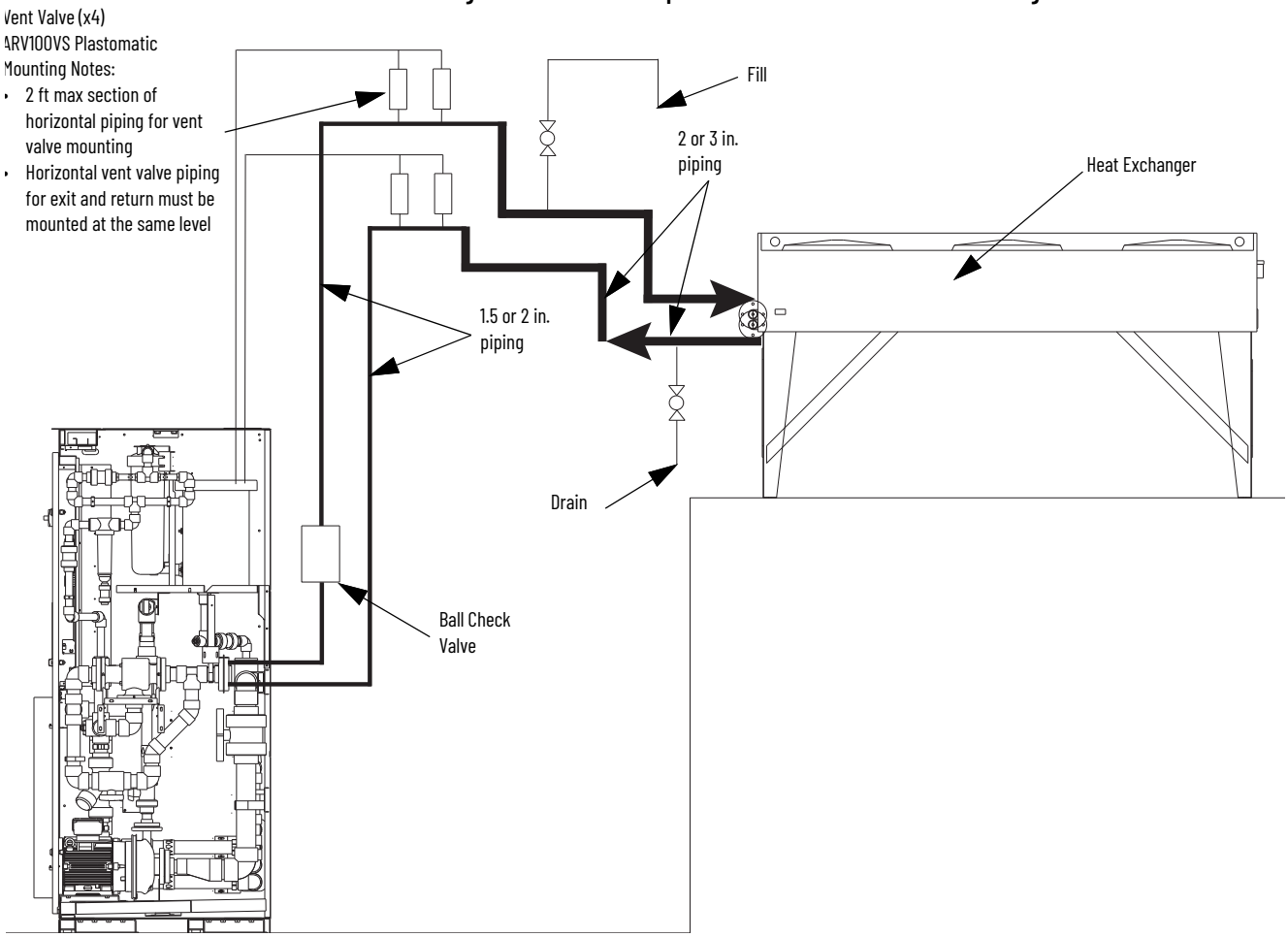

Liquid-to-Liquid Heat Exchangers

There are three options for routing piping between the liquid-to-liquid heat exchanger to the supply and return coolant:

- Pipes through top plate of cabinet
- Pipes through bottom plate of cabinet
- Pipes through right side of cabinet

Removable plates are provided in each of these locations.

Figure 63 - Connection to Liquid-to-Liquid Heat Exchanger (Back Plates Removed)

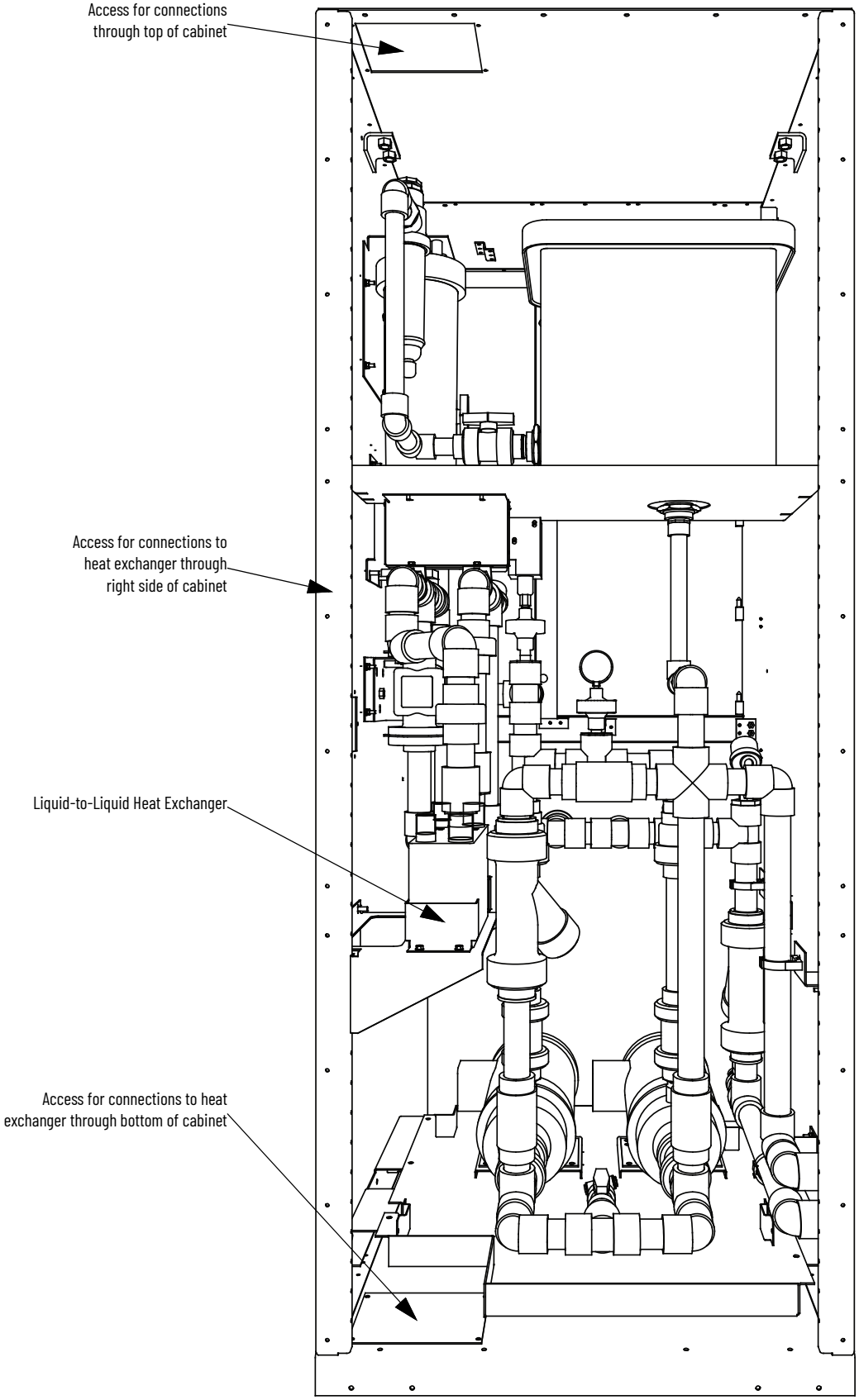

Figure 64 - Pipe Flange Detail

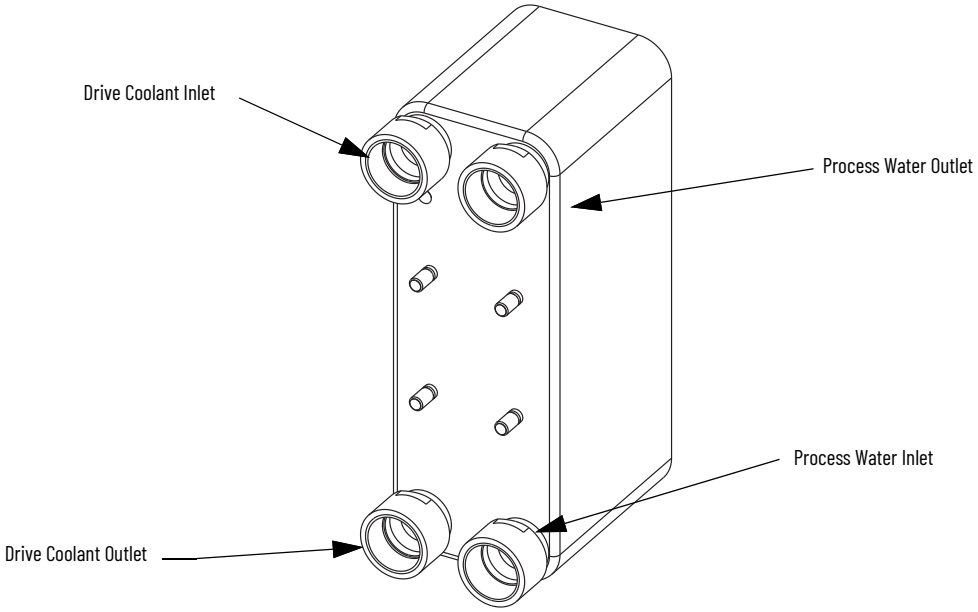

Table 2 - Customer Process Cooling Water Requirements for Liquid-to-Liquid Heat Exchangers

Drive			Min. Flow Rate		Min. Pressure Drop (kPa)	Temperature (°C)	
Rectifier	Voltage(1)	Amps	L/m(2)	US Gpm(3)		Min.	Max.
18-pulse	4160 (60 Hz)	375	76	20.0	7	> 0	<32
		430	83	21.8	8	> 0	<32
		495	117	30.8	13	> 0	<32
		575	170	44.7	15	> 0	<32
		657	193	50.8	25	> 0	<32
	6600 (50 Hz)	375	66	17.4	18	> 0	<32
		430	79	20.8	34	> 0	<32
		495	95	25.0	40	> 0	<32
		575	112	29.5	43	> 0	<32
		657	130	34.2	49	> 0	<32
AFE	4160 (60 Hz)	375	66	17.4	7	> 0	<32
		430	83	21.8	10	> 0	<32
		495	95	25.0	13	> 0	<32
		575	117	30.8	6	> 0	<32
		625	117	30.8	6	> 0	<32
	6600 (50 Hz)	325	104	27.4	17	> 0	<32
		375	129	34.0	24	> 0	<32
		430	140	36.8	34	> 0	<32
		495	170	44.7	40	> 0	<32
		575	193	50.8	43	> 0	<32

(1) For 50/60 Hz values not shown here, please contact the factory.
(2) L/m = Liters per minute
(3) US Gpm = Gallons per minute (U.S.)

Power and Control Wiring

Drive line-ups (for example, Drive and Input Starter) which are delivered in two or more sections, require that the power and control wiring is reconnected. After the sections are brought together, reconnect the power and control wiring as per the schematic drawings provided.

Control Cables

Control cable entry/exit should be located near the terminal block "TBC" – route the customer connections along the empty side of the TBC terminals. These terminals are sized to accept a maximum AWG #14 wire gauge. Connect the low voltage signals (includes 4-20mA) using twisted shielded cable, with a minimum AWG #18 wire gauge (based on a W4 terminal block for customer connections, comparable wire sizes would be 0.5…4 mm^2 as equivalent to #22-#10 AWG).

Of special concern is the encoder signal. Two encoder inputs are provided to accommodate a quadrature encoder (senses motor direction). The encoder power supply is isolated and provides +15V and a ground reference. Many encoder outputs have an open collector output, in which case a pull-up resistor must be added so proper signals are fed to the system logic.

IMPORTANT Low voltage signals are to be connected using twisted shielded cable with the shield connected at the signal source end only. The shield at the other end is to be wrapped with electrical tape and isolated. Connections are to be made as shown on the drawings provided.

Encoder Installation Guidelines

The most frequent problems that are encountered when transmitting encoder signals to the drive are signal distortion and electrical noise. Either of these problems can result in a gain or loss of encoder data counts (quadrature encoders) or corrupt positional data (absolute encoders). Problems can be avoided by applying good installation and wiring practices. This section is a general guideline and recommended practices for field installed equipment. It applies to either encoder board and both quadrature and absolute encoders.

Protection from Radiated and Conducted Noise

Reasonable care must be taken when connecting and routing power and signal wiring on a machine or system. Radiated noise from nearby relays, solenoids, transformers, non linear loads (such as motor drives) can couple onto signal wires producing undesired pulses. The encoder itself can induce noise into signal lines run next to it.

To avoid radiated and/or conducted noise, power and signal lines should be run separately with a minimum distance between them of at least 75 mm (3 in.). If they have to overlap somewhere in the system, then the power lines should be run at 90° to the signal lines. Signal lines should also use twisted pair shielded cable and run in separate conduit that should be grounded to the building ground.

Encoder wires and shields must maintain continuity throughout, from the encoder to the drive. Avoid the use of a terminal block in a junction box, as it has the potential of creating radiated noise and ground loops.

The encoder case must be grounded to the building ground to maintain proper operation. Most encoders have provision for a case ground connection through the connector/cable pair if a ground connection cannot be made through the mounting bracket/machine ground.

ATTENTION: Do not ground the encoder case through both the machine and cable wiring.

Use low capacitance wires (≤40 pF/ft) with 100% shield coverage for long cable runs and connect the shield only at the drive end.

Figure 65 - Detail Power Terminal Dimensions

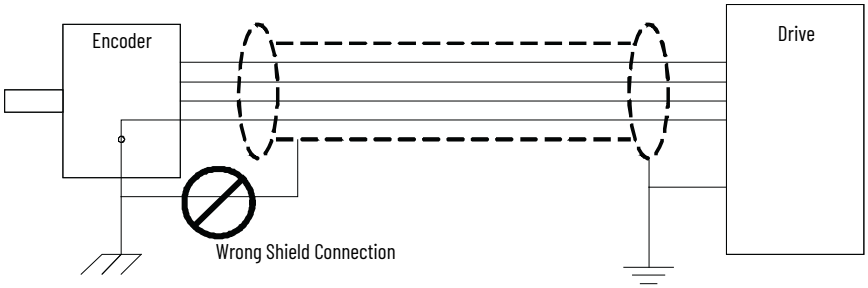

For more protection against electrical noise, specify an encoder with complementary outputs and connect with twisted-pair cable. With this type of cabling, the induced currents self-cancel.

As a final precaution, ground the shield together with all other parts of the system that require grounding to a point ground. This reduces varying ground potentials caused by high current fluxes that are created by motors, remote control switches, and magnetic fields.

Signal Distortion

The primary cause of signal distortion is cable length, more specifically cable capacitance. Generally, the longer the cable length, the more there is a chance of signal distortion at the receiving end. The receiving end responds to either a logical '0' or a logical '1'. In between is undefined and the transition through this region should be < 1.0 us. If the leading edge of the waveform is distorted, it causes the transition time through this region to increase. At some point, the receiver could become unstable and either gain or lose encoder counts.

To reduce the effects of signal distortion at the encoder receiving electronics, the following guidelines should be considered:

1. Use a low capacitance cable. Purchase a cable that has a capacitance of <120 pF/m (40 pF/ft). As an example Belden 1529 A is an 18 AWG 3pair cable having a capacitance of 114 pF/m (35 pF/ft).
2. Use twisted-pair cabling with a shield that covers 100% of the cable. This is especially true in the case of quadrature encoders. It is still a better choice for absolute encoders, although the data in these encoders will not exhibit the same frequency spectrum as quadrature encoders and single wire cabling can be used. In either case, always check with the encoder manufacturer for the recommended cable.

3. Keep cable distances as short as is practically possible. Rockwell Automation recommends:
   a. For the 20B-ENC encoders, the distance must be kept to a maximum of 65 m (200 ft). Longer cable distances could cause excessive surge currents. The operating frequency of the encoder has no bearing on this recommended distance due to AC termination used. If the frequency can be kept so the cable's characteristic impedance is around 348 ohms, this improves the surge currents and can increase the maximum distance to 100 m (330 ft).
   b. For the Universal Encoder Interface, the distance can be extended out to 200 m (650 ft) @ 100 kHz. This distance can be increased to 500 m at frequencies below 55 kHz. It is not recommended to exceed this distance since the voltage drop across the cable could cause a lower than expected power at the encoder.

Unused Inputs

Not all inputs, in either the quadrature or absolute encoders, are necessary. For example, the absolute encoder can accept a 12-bit encoder, but works with a lower resolution. Likewise, do not use the Z track with quadrature encoders. Use the following for unused inputs:

1. 20B-ENC board. Any unused input should be wired to the encoder positive power rail. This also includes the B and B' inputs if using a pulse encoder. Failure to do this will result in phase loss warnings and improper operation of the encoder feedback logic (missing counts).
2. Universal Encode Interface. When used as a quadrature encoder interface, the same rule applies as for the 20B-ENC board. When operating as an absolute encoder interface, the wiring of unused inputs is dependent on the position of the POL_QRDNT jumper. If the jumper is installed, then wire all unused inputs to ENC PWR, otherwise use ENC COM.

Information Regarding Termination of Customer Cables

Customer termination assemblies can accommodate either top or bottom customer cable entry.

Figure 66 - Typical Line Cable Termination (Shown for Bottom Cable Entry – 18-pulse)

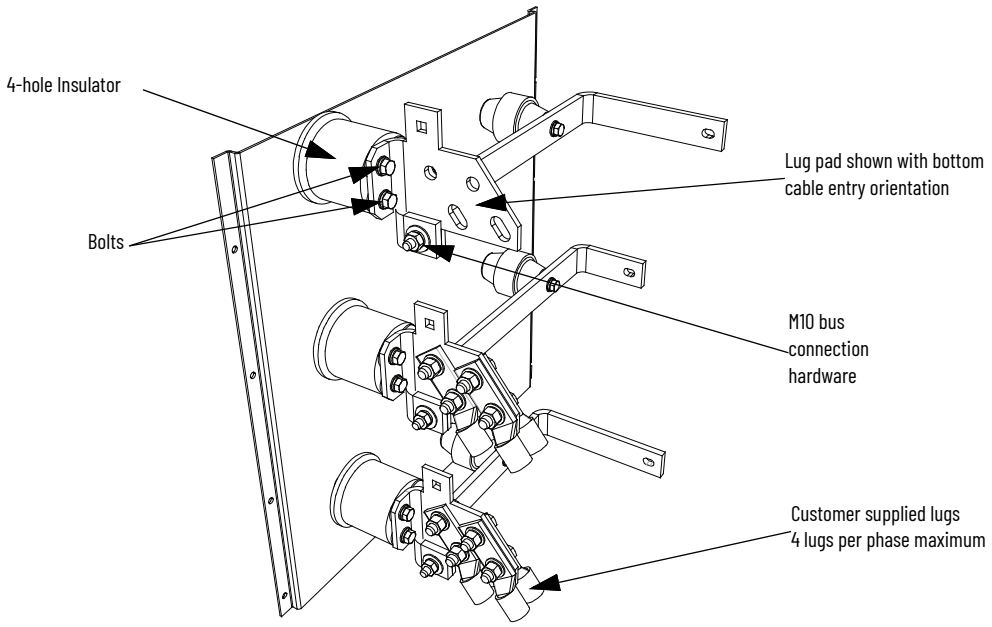

For top line cable entry, it is necessary to remove the lug pads and reorient them as shown in Figure 67. To remove the lug pads, disconnect the M10 bus connection hardware (17 mm hex tooling required). Remove the two bolts that secure the lug pad to the 4-hole insulator. See Torque Requirements on page 213.

Figure 67 - Typical Line Cable Terminal Assembly (modified for top cable entry – 18-pulse18-pulse)

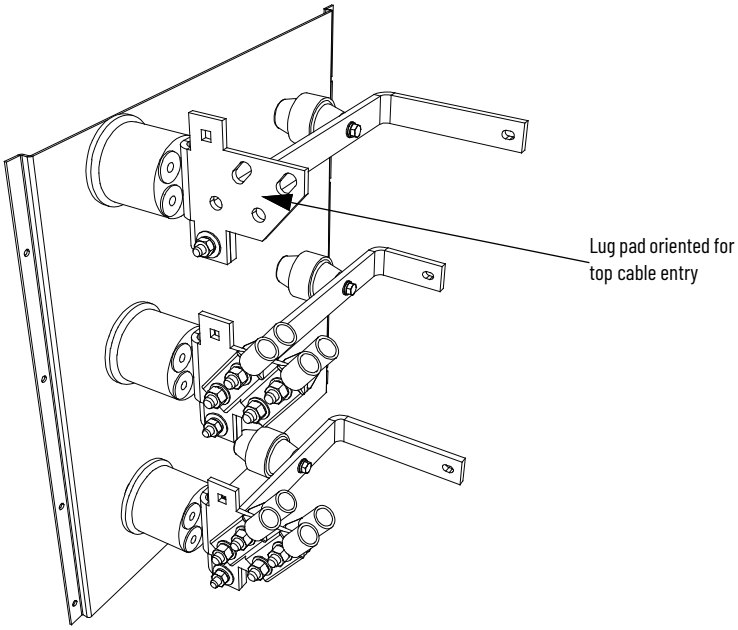

Grounding Practices

The purpose of grounding is to:

- Provide for the safety of personnel
- Limit dangerous voltages on exposed parts regarding ground
- Facilitate proper overcurrent device operation under ground fault conditions, and
- Provide for electrical interference suppression

IMPORTANT The means used for external grounding of equipment must be in accordance with the Canadian Electrical Code (CEC), C22.1 or the National Electrical Code (NEC), NFPA 70 and applicable local codes.

See the grounding diagrams that follow for ground connections. The main ground bus must be connected to the system ground. This ground bus is the common ground point for all grounds internal to the drive.

Figure 68 - Ground Connection Diagram with Isolation Transformer

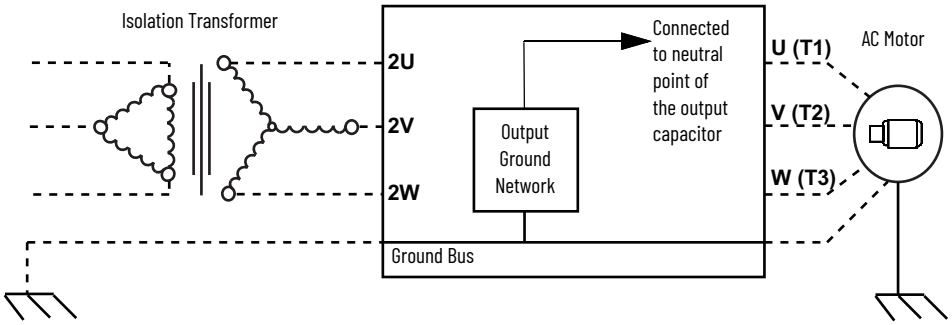

Figure 69 - Ground Connection Diagram with Line Reactor

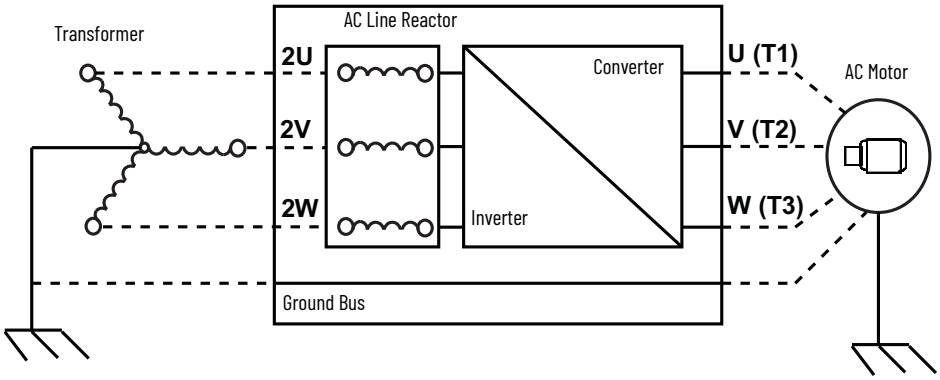

Each power feeder from the substation transformer to the drive must be provided with properly sized ground cables. Using the conduit or cable armor as a ground on its own is not adequate.

If a drive isolation transformer is used, the WYE secondary neutral point must not be grounded.

Each AC motor frame must be bonded to grounded building steel within 6 m (20 ft) of its location and tied to the drive's ground bus via ground wires within the power cables and/or conduit. Bond the conduit or cable armor to ground at both ends.

Grounding Guidelines and Practices for Drive Signal and Safety Grounds

When interface cables carrying signals, where the frequency does not exceed 1 MHz, are attached for communications with the drive, the following general guidelines must be followed:

- It is good practice for the mesh of a screen to be grounded around its whole circumference, rather than forming a pigtail that is grounded at one point.
- Coaxial cables with one conductor surrounded by a mesh screen should have the screen grounded at both ends.
- Where a multi-layer screened cable is used (that is, a cable with both a mesh screen and a metal sheath or some form of foil), there are two alternative methods:
  - The mesh screen may be grounded at both ends to the metal sheath. The metal sheath or foil (known as the drain) should, unless otherwise specified, be grounded at one end only, again, as specified above, at the receiver end or the end which is physically closest to the main equipment ground bus.

  or

  - The metal sheath or foil can be left insulated from ground and the other conductors and the mesh cable screen grounded at one end only as stated above.

Grounding Requirements and Grounding Specification for Customers and Power Integrators

An external ground must be attached to the main ground bus. The grounding means must comply with applicable local codes and standards. As general guidelines, for information only, the ground path must be of sufficiently low impedance and capacity that:

- The rise in potential of the drive ground point when subjected to a current of twice the rating of the supply must be no higher than 4V over ground potential.
- The current flowing into a ground fault is of sufficient magnitude to cause the protection to operate.

The main grounding conductors must be run separately from power and signal wiring so that faults:

- Do not damage the grounding circuit

  or
- will not cause undue interference with, or damage to, protection or metering systems, or cause undue disturbance on power lines.

Identification of Types of Electrical Supplies – Grounded and Ungrounded Systems

When dealing with an ungrounded, three-phase electrical supply system, the cable insulation must handle not only the phase-to-phase voltage, but also the voltage-to-ground if one of the other phases develops a ground fault. The cable insulation of an ungrounded, three-phase system must be good for at least a continuous voltage of root three (1.732) times (1.1) times the rated voltage of the supply. (1.732 x 1.1 = 1.9 times the rated line-to-line voltage).

Ground Bus

The drive ground bus runs along the top of the drive at the front. The ground bus is accessible at the top of each of the drive enclosures when the enclosure door is opened (and the low voltage compartment hinged out in the case of the incomer cabinet). It is the responsibility of the installer to ensure that the drive is grounded properly, typically at the point on the ground bus in the incomer cabinet, close to the incoming power terminations.

Interlocking

Access to the medium voltage areas of the drive restricts the use of key interlocking for safety.

At installation the key interlocking is set up so that access to the medium voltage compartments of the equipment can only be made when the upstream power is locked in the off position.

Additionally, the key interlocking prohibits the upstream power being applied until the access doors are locked.

It is the responsibility of the installer to ensure that the key interlocking is installed properly to the upstream equipment.

Power Component Definition and Maintenance

Control / Cabling Cabinet Components

Figure 70 - Control and Cabling Cabinet showing LV Control Panel (AFE Rectifier shown)

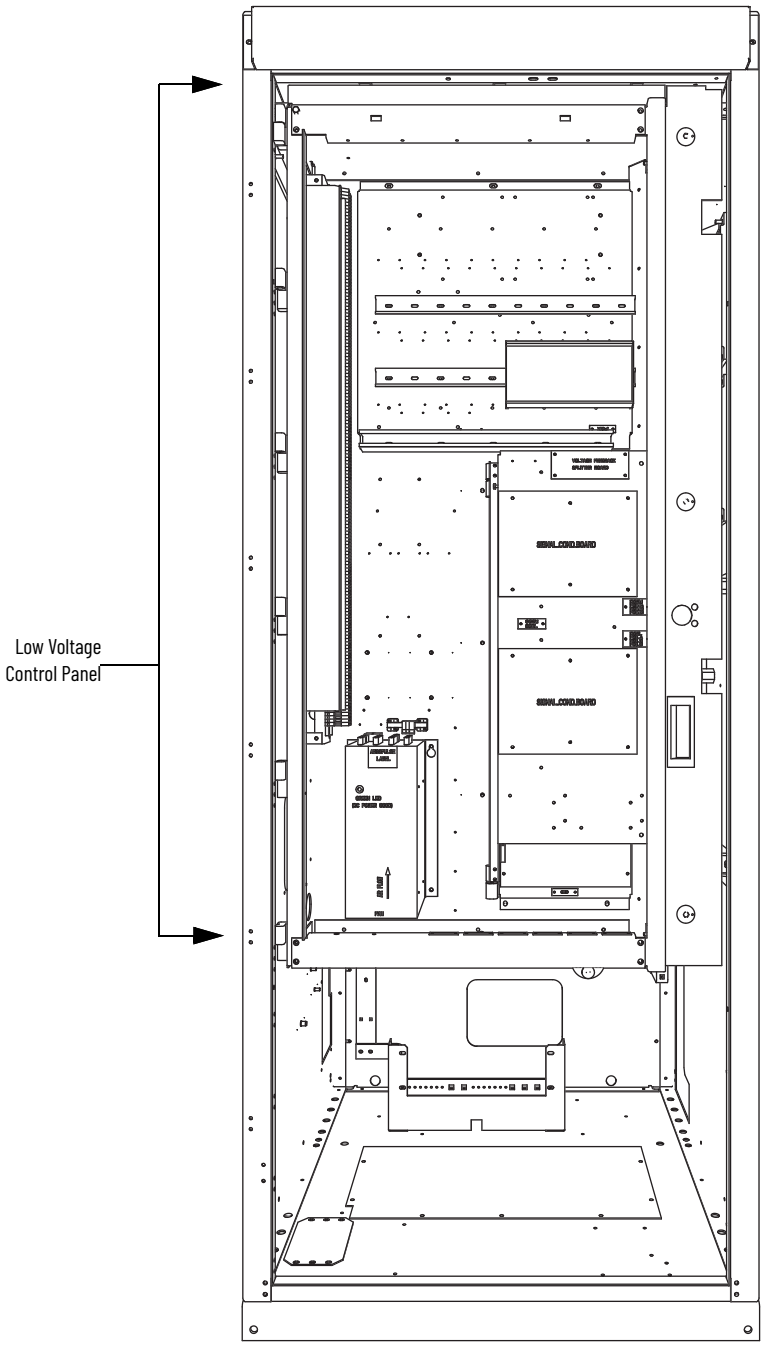

Figure 71 - AFE Control and Cabling Cabinet (with LV Control Panel removed)

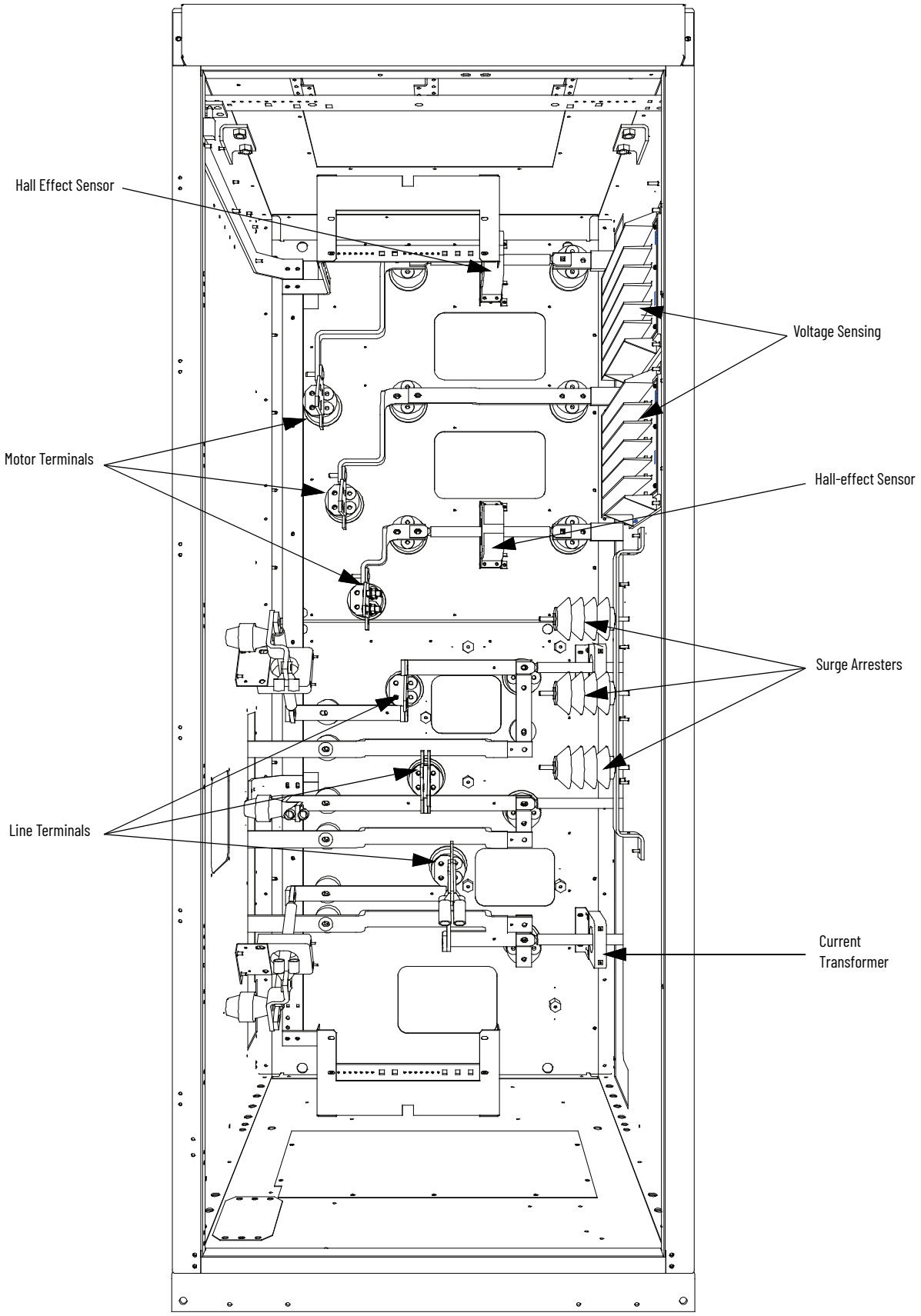

Figure 72 - 18-pulse Control and Cabling Cabinet (with LV Control Panel removed)

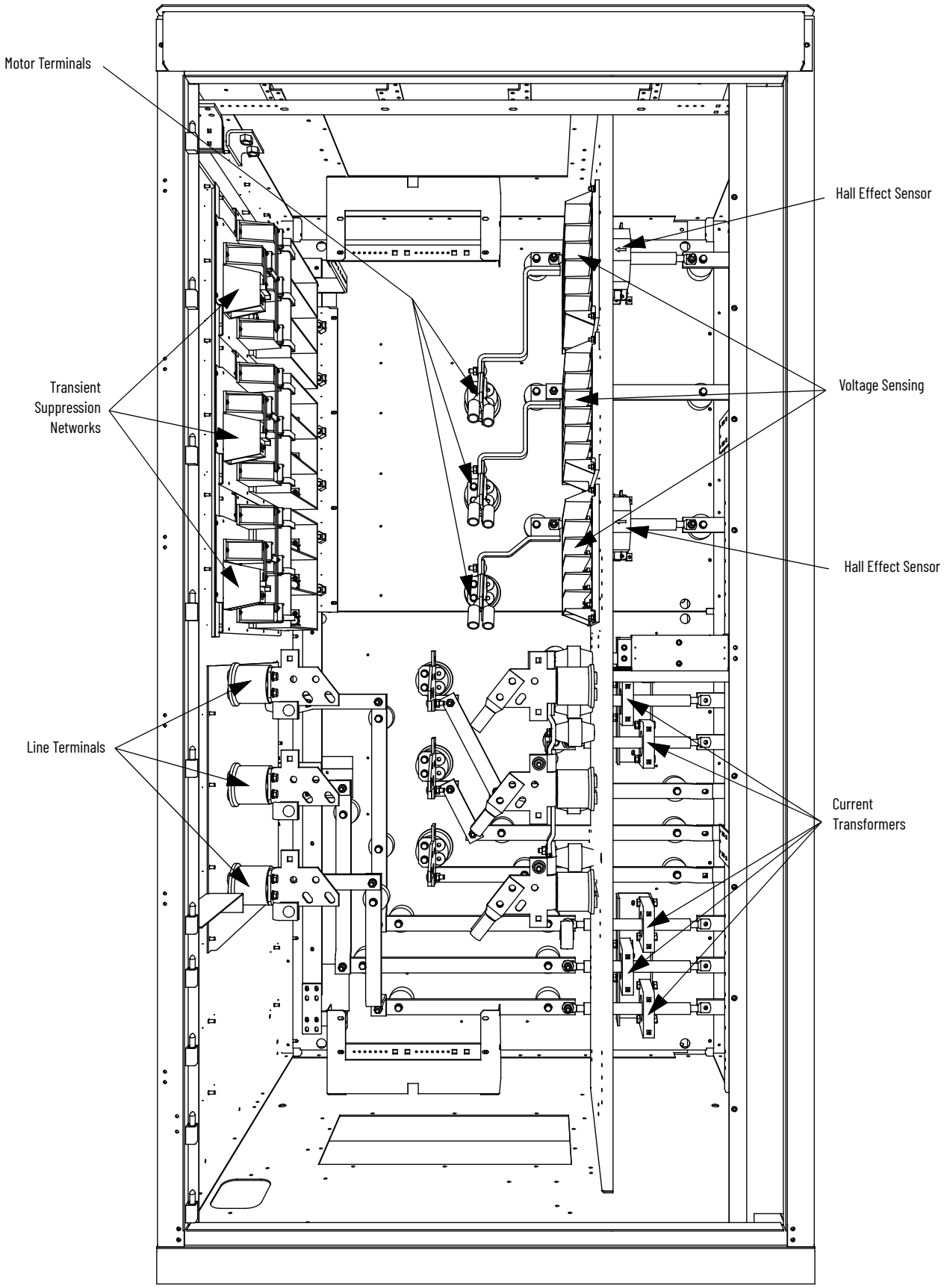

Voltage Sensing Assembly

The voltage sensing assembly consists of the voltage sensing board and the mounting plate. The voltage sensing board has six independent channels that convert voltages up to 10,800V (7.2kV x 1.5 pu) to low voltage levels that can be used by the PowerFlex® 7000L control logic (Signal Conditioning Board - SCB). Two of these assemblies can be linked together where one assembly acts as the master assembly, and the second assembly acts as the slave assembly. In this manner, up to twelve independent voltage channels can be measured. When two assemblies are linked together, the master assembly is used to send the twelve voltage signals to the SCB board. For drives that require the synchronous transfer option, one additional module is used. This assembly uses a separate connector to output the transfer voltages directly to the SCB board.

Table 3 shows input voltage ranges for each of the input terminals on the voltage-sensing board. There are four separate inputs taps for each of the six independent channels. This assembly has been designed to operate at a nominal input voltage of up to 7200V with a continuous 40% overvoltage. The output voltages are scaled to provide close to 10V peak for a 140% input voltage at the high end of each of the voltage ranges.

Each of the channels has only four taps, thus they must be used to provide a range of input voltages and software will be used to provide a given amount of gain so that 140% will correspond to the maximum numerical value of the analog to digital converter.

Table 3 - Nominal Input Voltage Ranges

Tap	Voltage Range
D	800...1449
C	1450...2499
B	2500...4799
A	4800...7200

ATTENTION: Grounds must be reconnected on the voltage sensing boards. Failure to do so may result in injury, death or damage to equipment.

Voltage Sensing Circuit Board Assembly Replacement

The number of sensing boards is dependent upon the drive rectifier configuration.

1. Ensure there is no power to the equipment.

   ATTENTION: To prevent electrical shock, ensure the main power has been disconnected before working on the sensing board. Verify that all circuits are voltage free using a hot stick or appropriate high voltage-measuring device. Failure to do so may result in injury or death.

2. Mark the position of the ribbon cables and wires.
3. Remove the screws and lift the ring lugs from the terminals to remove the wires.
4. Release the locking mechanism located on each side of the ribbon cable connector and pull the ribbon cable straight out to prevent bending the pins.
5. Remove the four nuts and washers that secure the assembly to the studs welded to the frame.
6. Remove the old VSB and replace with the new VSB on the studs, using the existing hardware to secure the assembly. **Do not overtorque the connections or you may break the studs**.

7. Replace ring lugs on terminals. Plug in ribbon cables making sure that cables are positioned properly and fitting is secure (locking mechanism is engaged).
8. For personnel and equipment safety, ensure both grounding connections are re-connected to the sensing board.

Figure 73 - Sensing Board with Mounting Hardware Placement

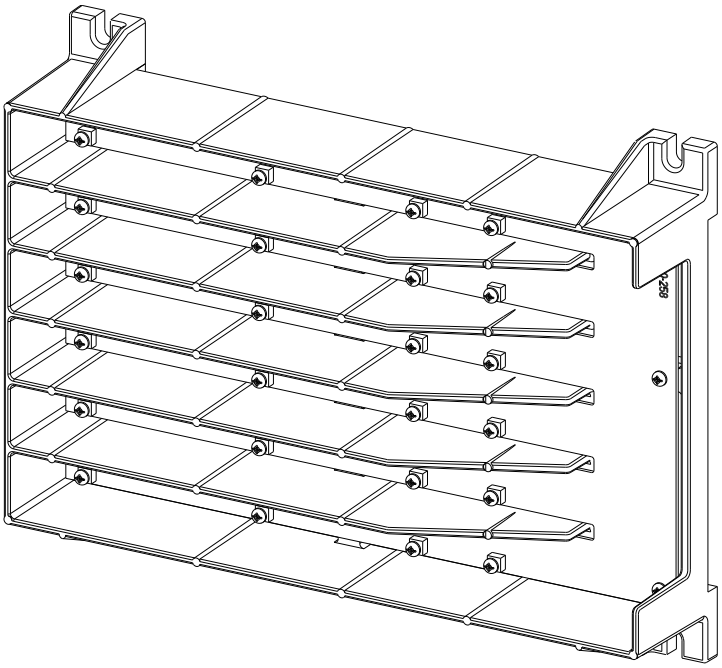

Input Transient Protection

Overview

Input transient protection is provided in two forms:

- Transient Suppression Network (TSN), or
- Surge Arresters

The TSN is optimized for 18-pulse rectifier designs. Surge Arresters are optimized for AFE and D2D rectifier designs.

Transient Suppression Network (TSN)

Description

The Transient Suppression Network Module consists of an assembly of suppressors that are connected to each of the three phase input lines and the structure's ground bus. There are three assemblies for an 18-pulse drive.

A transient voltage spike in excess of the semiconductor rating will destroy or shorten the lifespan of the device. The Transient Suppression Network Module provides suppression of transient overvoltages appearing on the input of the drive and is a standard feature of the drive. The two basic blocks of the TSN module are the MOV suppressor and the MOV fuse.

MOV Suppressor

The transient suppressors used in the module are heavy-duty metal oxide varistors or MOVs. Varistors are voltage dependent, nonlinear resistors. They have symmetrical voltage/current characteristics similar to back-to-back connected zener diodes. The varistor has very high resistance below its voltage rating and appears as an open circuit.

The leakage current through the device would be very small in this region. When a voltage transient occurs in which the voltage exceeds the "knee" in the curve, the varistor resistance changes from its high state by several orders of magnitude to a very low level. The voltage will be essentially clamped for a change in current of several orders of magnitude. This can be seen in Figure 74.

Figure 74 - Typical MOV V-I Characteristic Curve

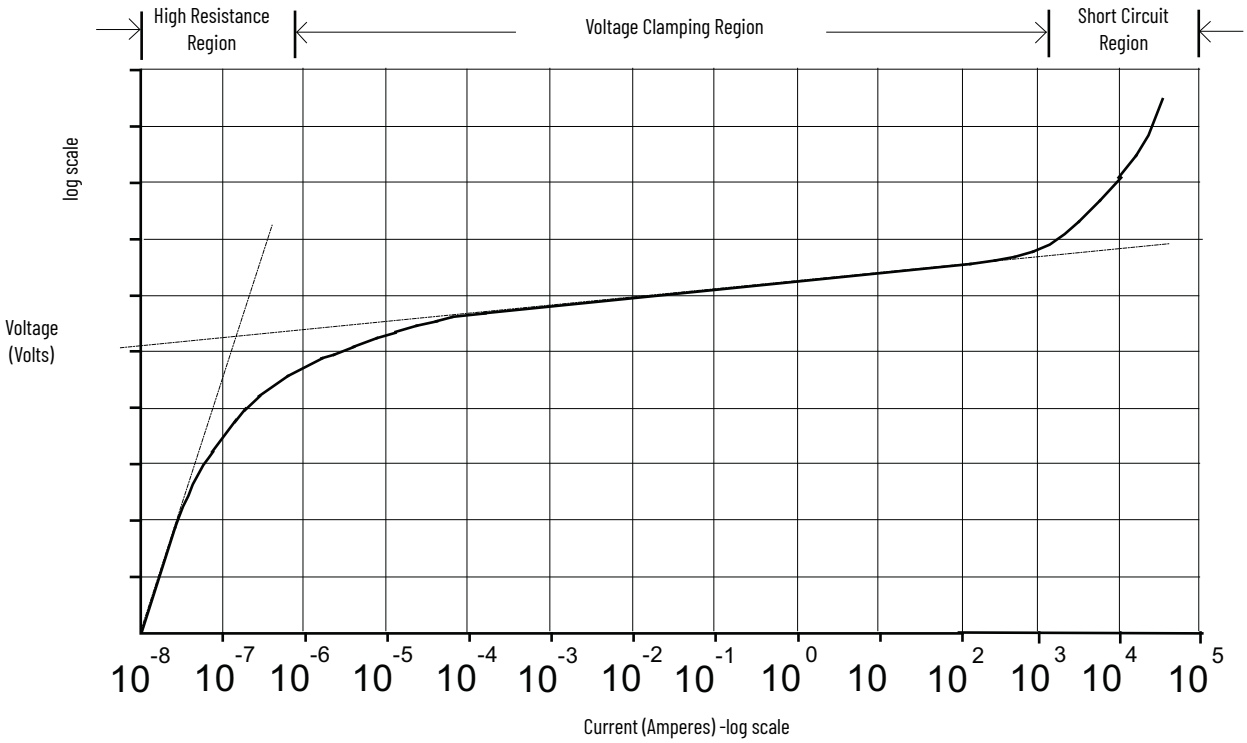

When the MOV is clipping the voltage transient, the energy of the transient is being absorbed by the MOV. The varistor has a limited energy absorbing capability and generally there is not enough time for the heat generated to be conducted out of the device. The MOV is sized based on the steady-state voltage rating, the energy in the transient, and the repetition rate of the transients. A critical element in the MOV selection and protection offered is the impedance in the line supplying the transient. This impedance will be mainly that provided by the Isolation Transformer or the AC Line Reactor on the input of the drive. That is why an impedance level is specified for these input devices.

MOV Fuse

In series with each of the Phase MOVs is a medium voltage fuse. These fuses (Figure 75) may be located on the assembly or remote from the assembly (on the Line Terminal Module). Check the part number on your module and the information in this documentation to determine which assembly you should have in your case.

The fuses provide overload protection for the conductors feeding the suppression network (and overcurrent protection if a short circuit occurs on the downstream side of the fuse). These conductors will normally have a much smaller current carrying capacity than the drive input conductors and thus will not be protected by the drive input fuses. The fuses also serve to isolate a failed MOV. Varistors initially fail in a short-circuited condition. The high follow-through current will open the fuse and remove the MOV from the circuit.

The fuses used are E-rated current limiting fuses with a high interrupting rating. Because they are current limiting, they will limit both the magnitude and duration of fault currents. They are small dimension, ferrule-type fuses with a fiberglass body, and mount in standard fuse clips.

IMPORTANT	The fuses sent with the Transient Suppression Network have been selected based on their characteristics (including internal resistance). This is necessary for optimum MOV performance and protection. Do not substitute other fuses without contacting the factory first.
	Voltage sensing occurs after the MOV fuse, and as a result open fuses will be detected in drive control as a master or slave undervoltage or unbalance.

Figure 75 - Simplified Wiring Diagram

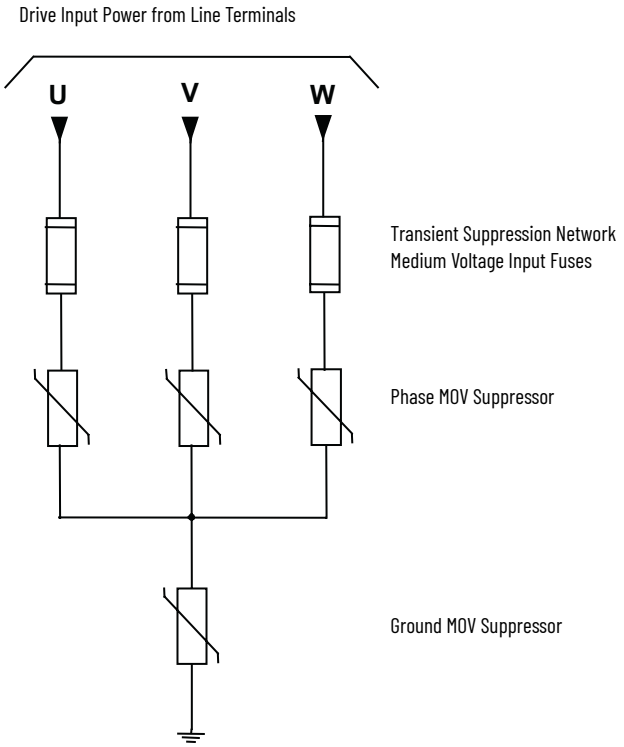

Transient Suppression Network Fuse Replacement

Two sizes of fuses (5 kV, 7.2 kV) are available within the Transient Suppression Network (TSN) located inside the connection cabinet. The 18-pulse drive contains three TSNs.

1. Ensure there is no power to the equipment.

ATTENTION: To prevent electrical shock, ensure the main power has been disconnected before working on the drive. Verify that all circuits are voltage free using a hot stick or appropriate voltage-measuring device. Failure to do so may result in injury or death.

2. Fuses are held in a place with a fuse clip. To remove the fuse, pull firmly.
3. To replace the fuse, hold it in position and push firmly until the fuse is seated within the fuse clip. Install fuses so that the rating is visible.

IMPORTANT Make sure to replace the fuse with another of the same rating. (See Figure 76 for location.)

Figure 76 - Transient Suppression Network

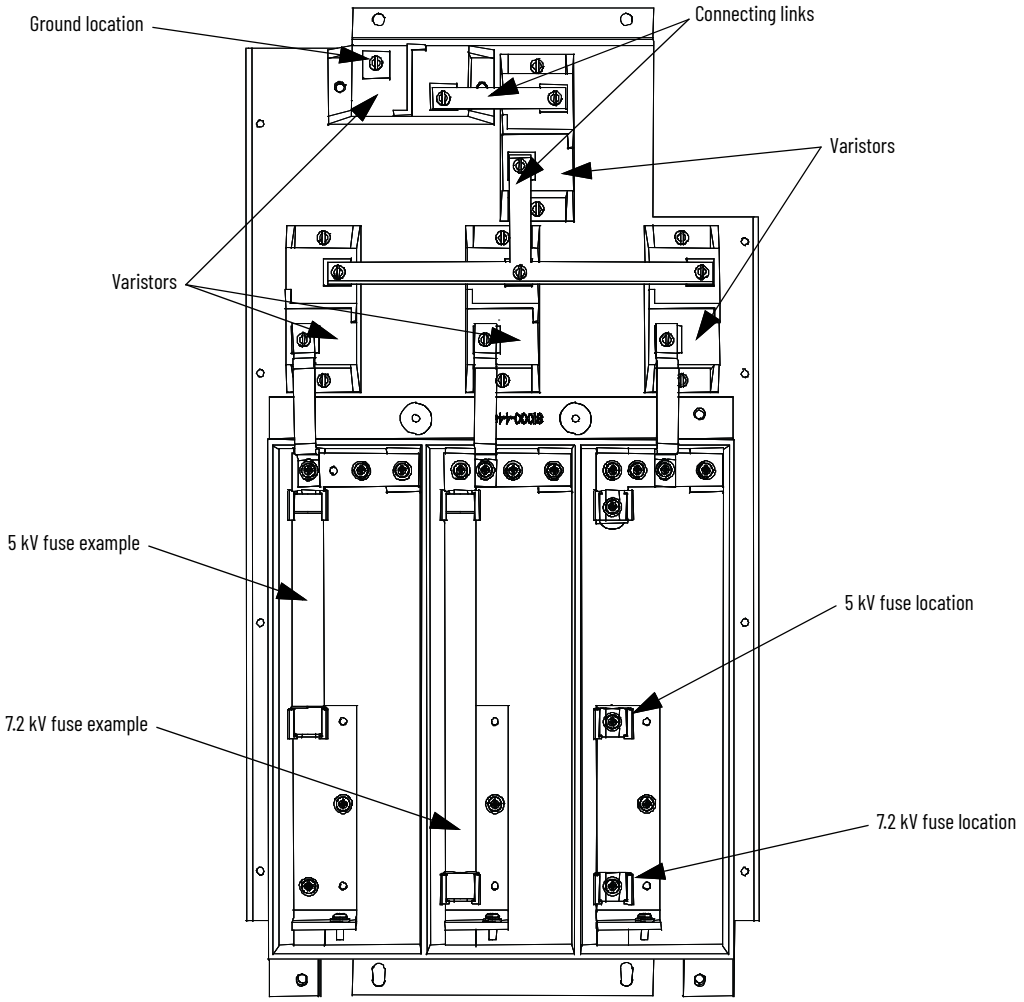

Metal Oxide Varistor Replacement

Metal oxide varistors (MOV) are part of the Transient Suppression Network located within the connection cabinet.

1. Ensure there is no power to the equipment.

> **ATTENTION:** To prevent electrical shock, ensure the main power has been disconnected before working on the transient suppression network. Verify that all circuits are voltage free using a hot stick or appropriate voltage-measuring device. Failure to do so may result in injury or death.

2. Observe the locations of the connecting links.
3. Detach the connecting links by removing the screws.
4. Using a screwdriver remove the screws at the base.
5. Replace the MOV (polarity is not an issue).
6. Continue by replacing the screws and connecting links.

> **IMPORTANT** Each MOV panel is grounded. Ensure that one MOV (see Figure 76 for location) is connected to the grounding lead.

Surge Arresters

Description

Heavy duty distribution class surge arresters are used for transient overvoltage protection in the drives with AFE rectifiers. The arresters are certified as per ANSI/IEEE Std C62.11-1993.

The surge arresters are basically MOVs, with or without an air gap in series, packed in sealed housing. They provide overvoltage protection similar to what the TSN module does. They differ from the TSN in that fusing is not required for the operation of surge arresters.

There are three types of surge arresters depending on the voltage class of the drive:

Drive voltage	2.4 kV	3.3 kV, 4.16kV, 4.8 kV	6.0...6.9 kV
Arrester rating (RMS)	3 kV	6 kV	9 kV
Arrester MCOV (RMS)	2.55	5.10	7.65

The most severe temporary overvoltage occurs when one phase is grounded in an ungrounded system. The full line-to-line voltage is applied to the arrester in this case. The arresters are designed to operate under this condition continuously without any problems as shown by their Maximum Continuous Operating Voltage (MCOV) rating.

There are three Y-connected surge arresters attached to the incoming MV lines. The neutral point of the arresters is connected to the ground bus.

Figure 77 - Surge Arresters

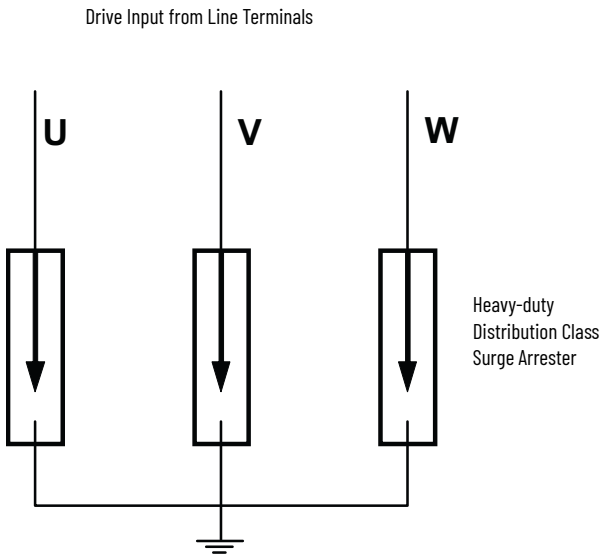

Operation

The operation of arresters without a gap is the same as that of MOVs in the TSN. Depending on design, the arrester may also be gapped. Both gapped and un-gapped arresters provide adequate overvoltage protection.

The arresters are able to withstand or ride through most commonly seen bus transients within their capability. However, caution should be taken if there is a harmonic filter on the MV bus to which PowerFlex 7000 is connected. The filter should satisfy relevant international or local standards, such as IEEE Std 1531 — Clause 6.4, to avoid high inrush currents.

The surge arrester is certified as per ANSI/IEEE Std C62.11-1993. Certification tests include high current short duration tests, low current long duration tests and fault current withstand tests. The fault current withstand tests consist of different combinations of kA and number of cycles, including a 20 kA 10-cycle test, under which the arresters are non-fragmenting and without expelling any internal components.

When the incoming energy exceeds the handling capability of the arrester and causes arrester failure, the housing is designed to split open to vent without causing damage to any adjacent components.

Surge Arrester Replacement

1. Ensure there is no power to the equipment. Isolate the drive by lockout/tagout.

> **ATTENTION:** To prevent electrical shock, ensure the main power has been disconnected before working on the surge arrester. Verify that all circuits are voltage free using a hot stick or appropriate voltage-measuring device. Failure to do so may result in injury or death.

2. Wait for a minimum of 10 minutes to allow the stored energy in the drive to be discharged.
3. Observe the location of the connecting leads.
4. Using proper method to ensure the leads are at ground potential. Use temporary ground when necessary.
5. Detach the connecting leads.
6. Loosen the bolt that attaches the surge arrester to the ground bus. Remove the arrester. Remove temporary ground when applicable.
7. Replace the surge arrester with an equivalent one (make sure that the voltage rating is the same).
8. Connect the leads to the surge arrester.
9. Surge arrester hardware to be torqued to 28 N•m (21 lb•ft).

Figure 78 - Surge Arresters

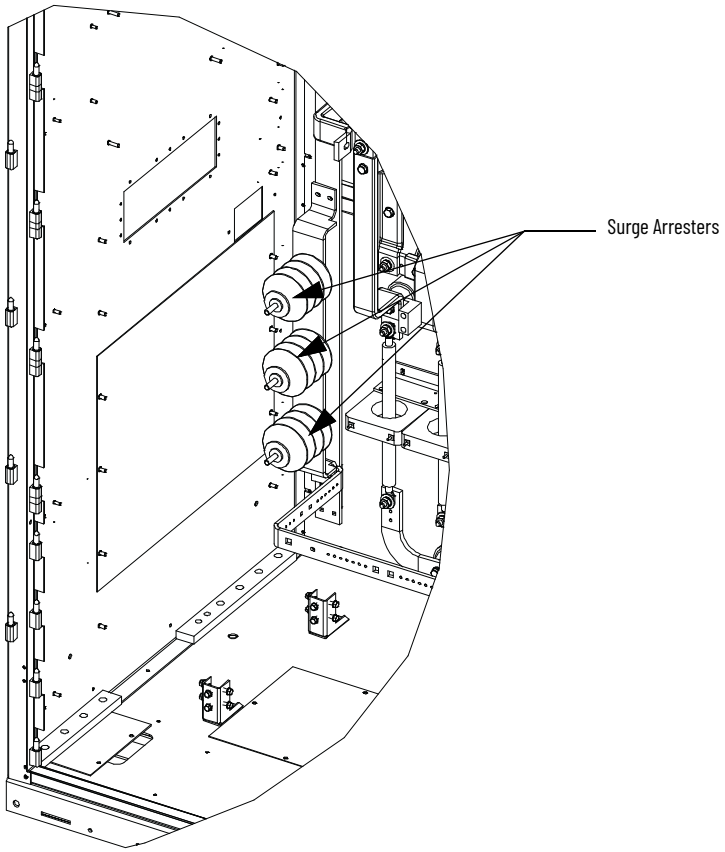

When the surge arrester is disconnected from medium voltage, it is possible that a small amount of static charge is retained by the arrester. As a precautionary measure, install a temporary ground on the line-end of the arrester and discharge the stored energy. Remove temporary ground before the arrester is reinstalled.

SHOCK HAZARD: To avoid electrical shock when removing the arrester from service, consider it to be fully energized until both the line and ground leads are disconnected.

Field Test and Care

No field testing is necessary. The arresters do not require special care. However, at very dusty sites, it is suggested to clean the arrester when the whole drive is cleaned.

Output Grounding Network Capacitor Replacement

PowerFlex 7000 18-pulse and some AFE drives will come with a grounding network installed.

The number of capacitors will vary depending on the system voltage.

1. Ensure there is no power to the equipment.

ATTENTION: To prevent electrical shock, ensure the main power has been disconnected before working on the capacitor. Verify that all circuits are voltage free using a hot stick or appropriate voltage-measuring device. Failure to do so may result in injury or death.

2. Note the position of the leads.
3. Remove the 6.4 mm (1/4 in.) hardware and disconnect the leads connected to the terminals.
4. Four brackets are used to secure the capacitor. Loosen the four screws at the base of the brackets and lift the capacitor out.
5. Place the new capacitor and tighten the screws.
6. Replace the ring lugs and 6.4 mm (1/4 in.) hardware (see Figure 79).

IMPORTANT The maximum torque for the capacitor terminal is 3.4 N•m (30 lb•in).

Figure 79 - Capacitor in Grounding Network

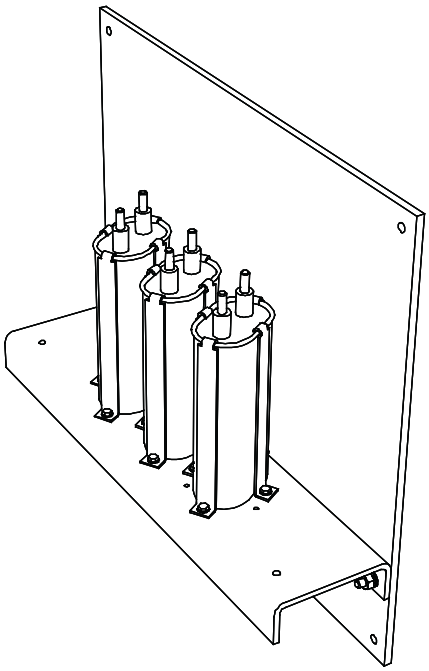

Figure 80 - Location of Ground Filter in "C" Frame Drive

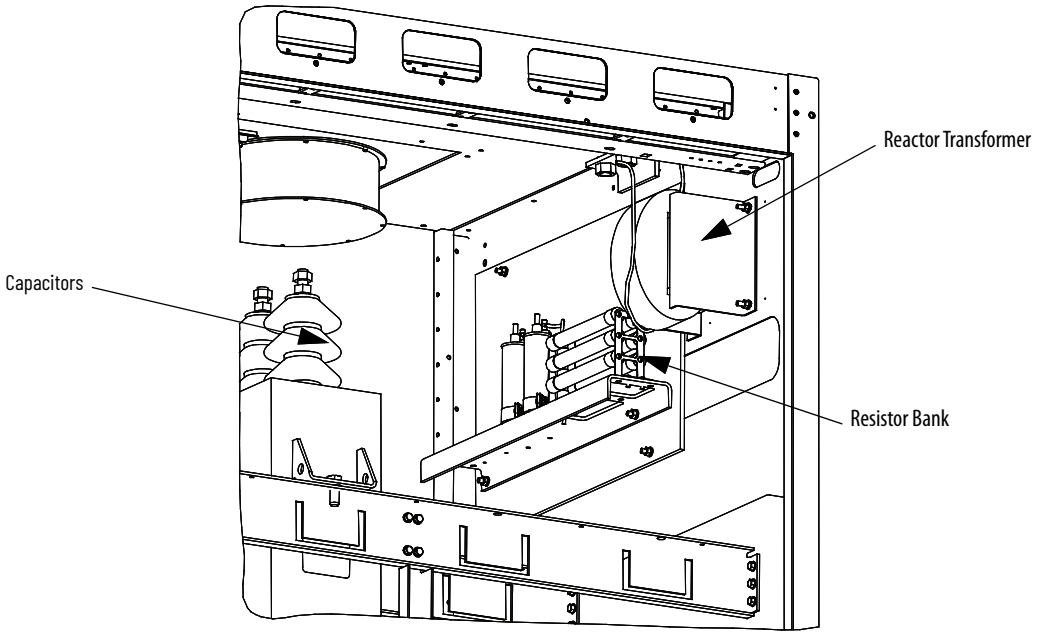

Figure 81 - Torque Values for Ground Filter Assembly

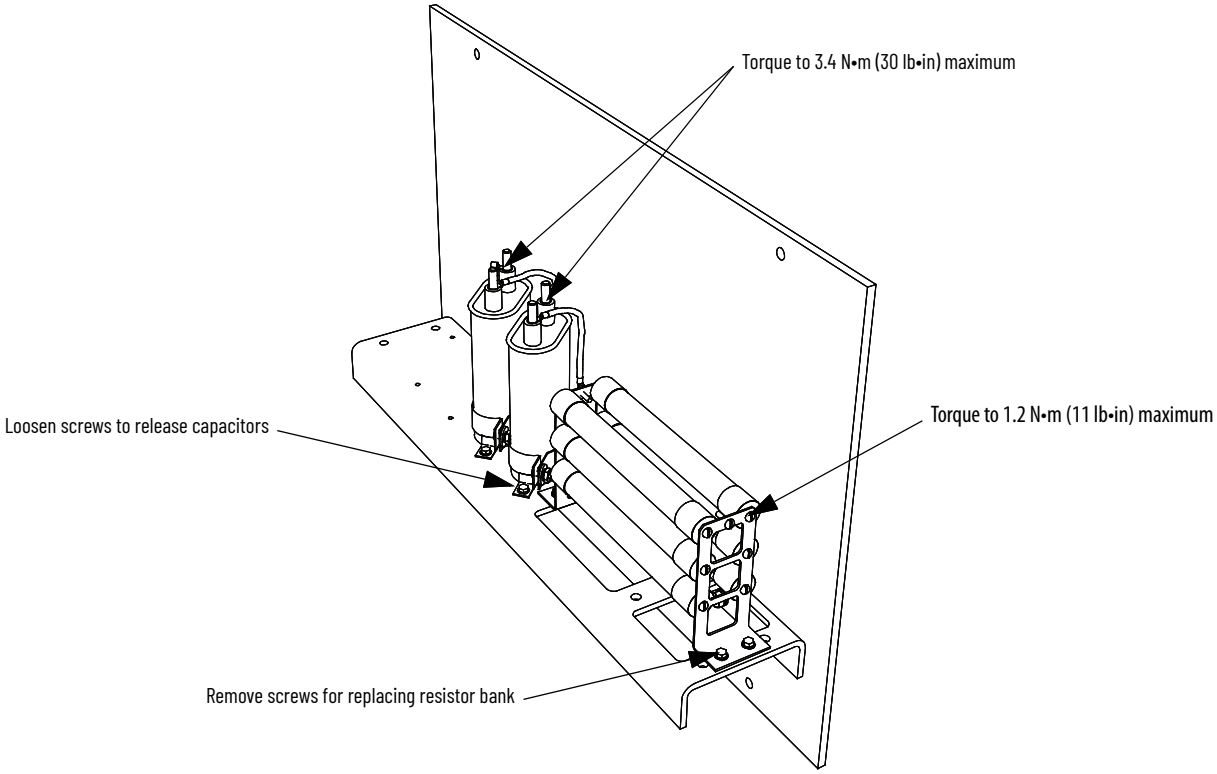

Ground Filter Replacement

The number of capacitors will vary depending on the system voltage.

1. Ensure there is no power to the equipment.

ATTENTION: To prevent electrical shock, ensure the main power has been disconnected before working on the capacitor. Verify that all circuits are voltage free using a hot stick or appropriate voltage-measuring device. Failure to do so may result in injury or death.

2. Note the position of the leads.
3. Disconnect the leads connected to the capacitor/resistor bank.
4. Loosen and remove mounting screws as indicated in Figure 82 and remove the component.
5. Assemble the new component in the reverse order of disassembly.
6. Reattach the leads strictly adhering to the torque requirements (See Torque Requirements on page 213).

IMPORTANT The maximum torque for the capacitor terminal is 3.4 N•m (30 lb•in).

Figure 82 - Ground Filter Capacitor/Resistor

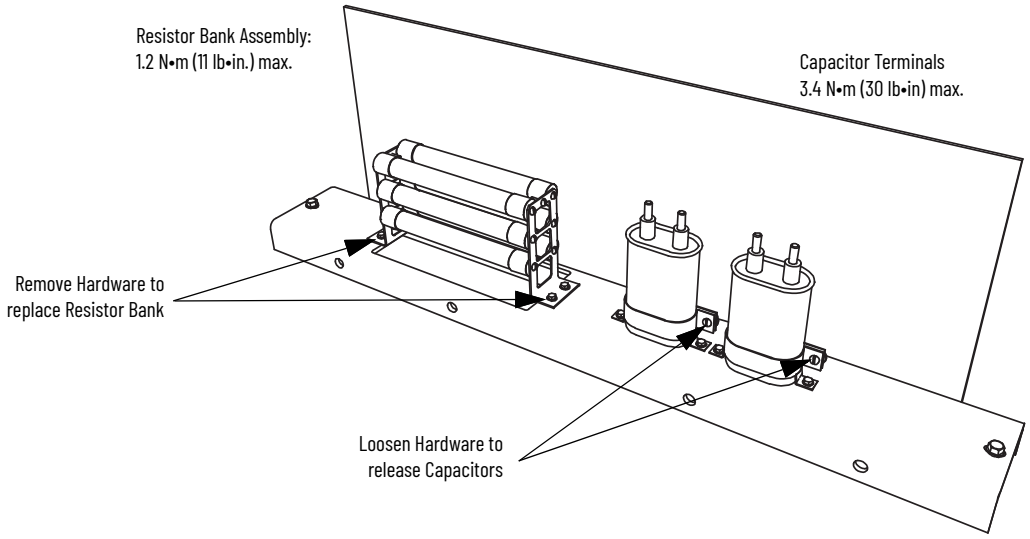

Hall Effect Sensor Replacement

1. Ensure there is no power to the equipment.

ATTENTION: To prevent electrical shock, ensure the main power has been disconnected before working on the Hall Effect sensor. Verify that all circuits are voltage free using a hot stick or appropriate voltage-measuring device. Failure to do so may result in injury or death.

2. Note the location of all wires and the orientation of the Hall Effect sensor. For quick reference, look for the white arrow when checking the orientation of the Hall Effect sensor.

IMPORTANT The Hall Effect sensor and wires must be in the proper orientation. Note the position before disassembly.

3. The round bus bar must be removed. Remove the M10 hardware and slide the bar out.
4. Remove the screws from the three terminals to allow removal of the ring lugs.

5. Remove the four screws on the base of the Hall Effect sensor.
6. Replace the Hall Effect sensor. Note the arrow must be oriented as shown in Figure 83.
7. Slide the bus bar back into place and secure with the M10 hardware.
8. Fasten the ring lugs on the wires back into place in the correct position. Do not overtighten or you will break the threaded stud.

Figure 83 - Motor Terminal Assemblies

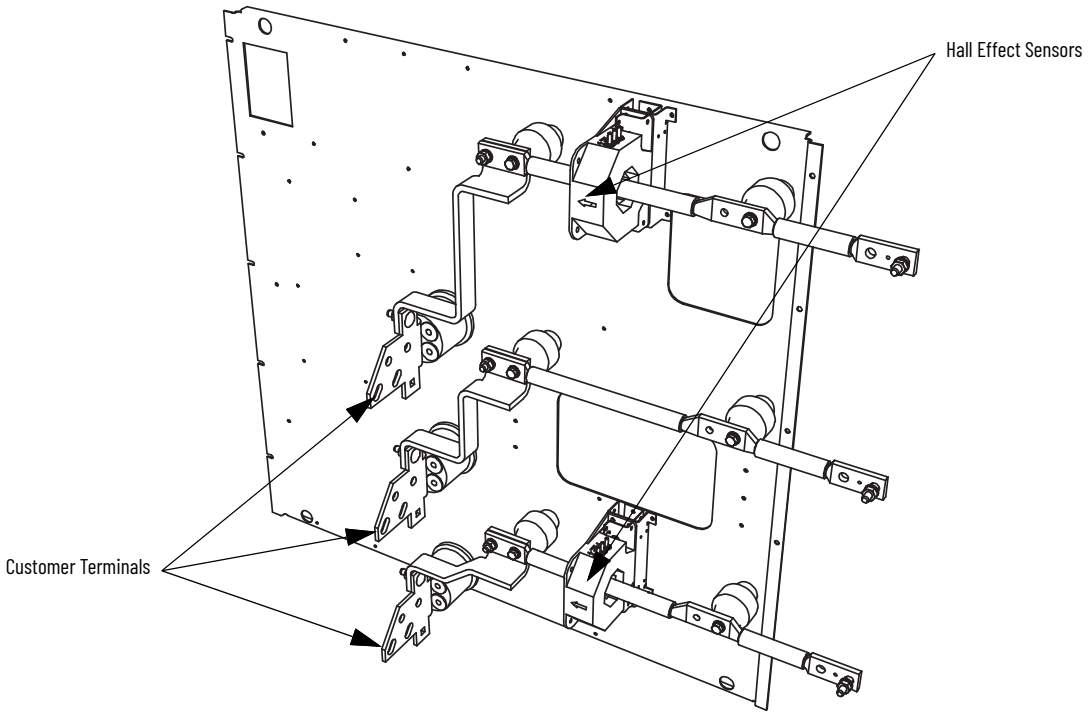

Arrows on Hall Effect sensors indicate direction of current flow. Customer Terminals shown for bottom cable entry. Customer must remove and re-orient terminals if top entry is required.

Current Transformer Replacement

1. Ensure there is no power to the equipment.

ATTENTION: To prevent electrical shock, ensure the main power has been disconnected before working on the current transformer. Verify that all circuits are voltage free using a hot stick or appropriate voltage-measuring device. Failure to do so may result in injury or death.

2. Note the location of all wires and the orientation of the CT. For quick reference when checking the orientation of the CT, look for the white dot.

IMPORTANT The CT and wires must be in the proper orientation. Note the position before disassembly.

3. Disconnect the wires.
4. The bus bar must be disassembled to allow removal of the CT. Remove the M10 hardware to allow the bus bar to slide out.
5. Remove the four screws located in the base of the CT and remove.
6. Replace the CT, ensuring the proper orientation. Fasten the CT securely with the four screws in the base.
7. Reconnect the ring lugs.

8. Replace the bus bar and tighten into place.

Figure 84 - Line Terminals

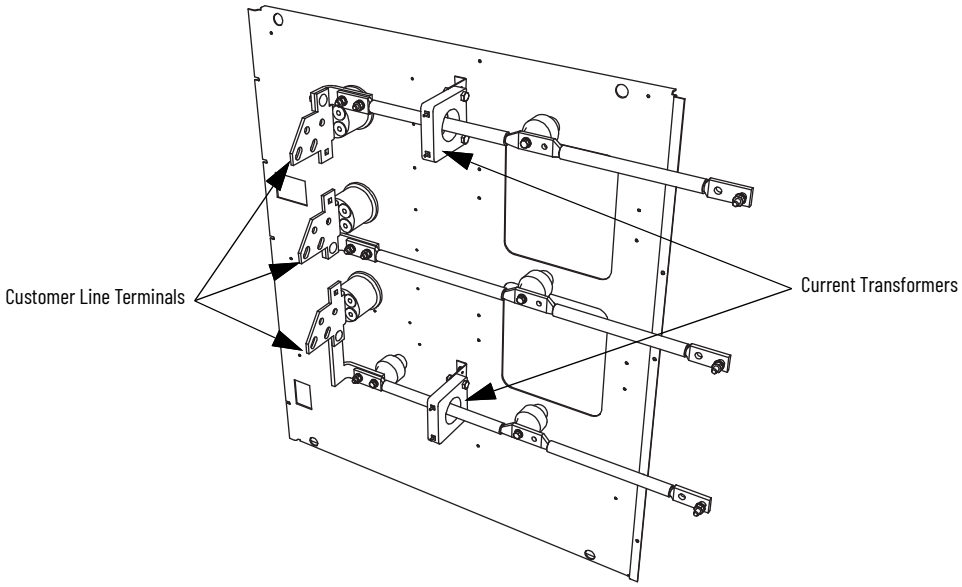

Customer terminals shown for bottom cable entry. Terminals can be removed and re-installed with orientation for top cable entry.

Filter Capacitor Cabinet

Overview

Filter capacitors are used on the motor side for all drives. The AFE rectifier option also includes filter capacitors on the line side. Refer to Figure 72 (cabling cabinet for 18-pulse Rectifier), and Figure 71 (cabling cabinet for AFE rectifier).

The filter capacitors are three-phase, oil-filled, four-bushing units. The three-phase capacitors are internal single-phase units connected in a Y configuration. The neutral point of the Y connects to the fourth bushing, which is available to use as a neutral point voltage measurement or other protection/diagnostics purposes. The metal cases of the capacitors are grounded through a stud on the capacitor housing.

The capacitors are equipped with internal "bleeding resistors" to discharge the capacitor and reduce its voltage below 50V in 5 minutes when left disconnected. A typical three-phase capacitor is shown in Figure 85.

Figure 85 - Motor Filter Capacitor

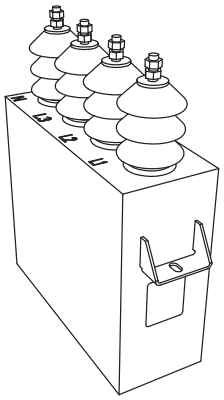

WARNING: Allow 5...10 minutes for motor capacitors to safely discharge voltage prior to opening cabinet doors.

WARNING: The following fault codes may also indicate a non-operational Motor Filter Capacitor (MFC):

F96 (Motor Overcurrent Fault)
F98 (Motor Neutral Overvoltage Fault)
F99 (Motor Flux Unbalance Fault)
F100 (Motor Current Unbalance Fault)
F103 (Motor Stall Fault)
F113 (DC Link Overcurrent Fault)
F114 (Ground Overcurrent Fault)
F115 (Neutral Resistor Overcurrent Fault)
F145 (Neutral Resistor Overload Fault)

Do not reset these faults until you have determined the root cause of the fault.

Operating a synchronous transfer system (specifically during the 'Transfer to Drive' operation, also known as the de-sync operation) with a non-operational MFC can lead to serious personal injury and/or property damage.

Filter Capacitor Mounting Plate

Depending on your drive configuration, you may need to assemble or remove a filter capacitor mounting plate. Oil-filled capacitors manufactured by Ducati Energia and ICAR are no longer available. Replacement Shizuki capacitors are available, but are not in all cases the same size and require additional disassembly or assembly to install them in the drive.

If you are replacing a Ducati capacitor with a Shizuki capacitor, you must remove the existing mounting plate. See Table 4 for details.

If you are replacing a ICAR capacitor with a Shizuki capacitor, you must install a mounting plate. See Table 5 for details and Capacitor Mounting Plate Assembly on page 92.

Table 4 - Select a Shizuki Capacitor when Replacing Ducati Capacitors

Original Ducati Capacitor		Replacement Shizuki Capacitor		Instruction
Part Number	Description	Part Number	Description	
80026-488-03	6600V-400 kVAR, 75 Hz	PN-680965	6600V-400KVAR 75 Hz FL66C40EJXXR4A	Remove existing mounting plate.
80026-488-07	6600V-400 kVAR, 75 Hz	PN-E089298	6600V-400KVAR 90 Hz FL66C40EJXXR4B	No action required. No mounting plate needed.
80026-488-08	6600V-400 kVAR, 75 Hz	PN-E089299	6600V-500KVAR 90 Hz FL66C50EJXXR4B	Remove existing mounting plate.

Table 5 - Select a Shizuki Capacitor when Replacing ICAR Capacitors

Original ICAR Capacitor		Replacement Shizuki Capacitor		Instruction
Part Number	Description	Part Number	Description	
PN-326214	6600V-400 kVAR 90 Hz, BIORIPHASO/TF 400/6.6/T	PN-E089298	6600V-400KVAR 90 Hz, FL66C40EJXXR4B	See Capacitor Mounting Plate Assembly on page 92.
PN-326211	6600V-500 kVAR 90 Hz, BIORIPHASO/TF 500/6.6/T	PN-E089299	6600V-500KVAR 90 Hz, FL66C50EJXXR4B	No action required. No mounting plate needed.

Capacitor Mounting Plate Assembly

If you are replacing an ICAR capacitor with a Shizuki capacitor, you must assemble and install a mounting plate which raises the capacitor to the appropriate height. The mounting plate components and hardware are included in assembly kit PN-687017.

Table 6 - PN-687017 Kit Contents

Part Number	Quantity	Description
PN-E089298	1	Capacitor, 6600V, 400 kVAR, 90 Hz
81001-195-02	1	Capacitor mounting plate
81001-196-02	2	Capacitor mounting plate bracket
29171-640-01	12	M6 bolt

Follow these steps to assemble the Capacitor Mounting Plate.

1. Verify you have the kit contents as listed in Table 6.
2. Fasten one capacitor mounting plate bracket to the mounting plate using four M6 bolts (6 N•m[4.4 lb•ft]).

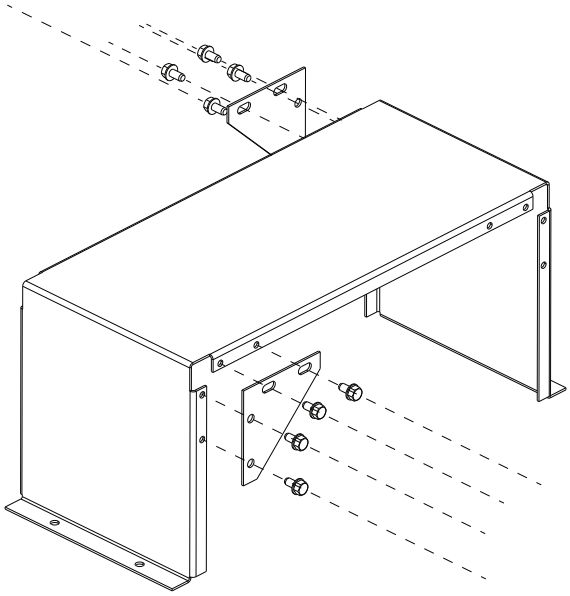

3. Fasten the other capacitor mounting plate bracket.

Filter Capacitor Replacement

IMPORTANT Capacitors can weigh as much as 100 kg (220 lb). Use two or more people to remove a capacitor.
Do NOT move the capacitors using the bushings.

See publication 7000-IN010, "Handling, Inspection, and Storage of Medium Voltage Line Filter Capacitors".

1. Isolate and lockout all power to the drive.

ATTENTION: To help prevent electrical shock, disconnect the main power before working on the drive. Verify that all circuits are voltage-free using a hot stick or appropriate voltage-measuring device. Failure to do so can result in injury or death.

2. Note the location of the cables and mark them accordingly.

3. Remove four power connections to the terminals, and the single ground connector from the drive to the capacitor frame. This connector is at the back top right corner of the capacitor.
4. Remove the front bracket that holds the capacitor in place (see Figure 53 on page 56). At the rear of the capacitor, there is no hardware that secures the capacitor; it fits into a slot in the assembly.
5. Remove the capacitor from the drive.
   a. If you are removing a Ducati capacitor, remove the existing capacitor mounting plate and proceed to step 7. See Table 4 on page 91 for more information.

      If you are removing an ICAR capacitor (PN-326214), you must install a capacitor mounting plate. Continue to step 6.

ATTENTION: The porcelain bushings are extremely fragile and any force applied to the bushings can damage the seal between the bushing and the body causing potential leaks or chipping.

6. Assemble the capacitor mounting plate as shown in Capacitor Mounting Plate Assembly on page 92.
   a. Fasten the mounting plate to the drive cabinet using four M6 bolts (6 N•m [4.4 lb•ft]).

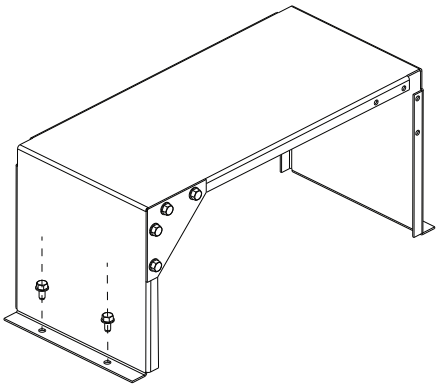

7. Slide the new capacitor until it fits into the slot. Fasten the front bracket.
8. Reconnect the power cables and the ground connection. These connections use M14 hardware, but should only be tightened to 25 N•m (19 ft•lb) due to capacitor mechanical constraints. You can fasten these connections before fully sliding the capacitor into place depending on the available space.

IMPORTANT Use two wrenches to tighten the nuts to prevent damage to the capacitor.

9. There are instruction labels on each capacitor which detail how to tighten the terminal connections. Refer to these labels.
10. Reinstall the sheet metal that was removed, and complete one final check to verify connections are secure and correct.

Testing Filter Capacitors

There are two ways to test line filter capacitors. Rockwell Automation recommends the first method as it reduces the chance of retorque issues because the capacitors are not disconnected. If the readings are unsatisfactory, the second method is more accurate, but involves disconnecting and testing them individually.

First Method

1. Verify there is no power to the equipment.

ATTENTION: To prevent electrical shock, disconnect the main power before working on the drive. Verify that all circuits are voltage-free using a hot stick or appropriate voltage-measuring device. Failure to do so may result in injury or death.

ATTENTION: Verify the load is not running due to process. A freewheeling motor can generate voltage that feeds back to the equipment.

2. Follow appropriate safety steps to isolate the equipment from medium voltage.
3. Verify that there is no voltage present on the capacitor by using a hot stick or any other appropriate voltage-measuring device.
4. Perform visual inspection to ensure there is no oil leak or bulge in any of the capacitors.

ATTENTION: Capacitors that appear bulged or are leaking oil indicate potential problems with the internal elements. DO NOT USE. These units must be replaced. Failure to do so can lead to personal injury or death, property damage, or economic loss.

5. Using a DMM measure the capacitance across each phase-to-neutral of capacitors without removing any connections.

   If the difference between the highest and the lowest readings is below 15%, then all capacitors are in good condition. If the difference between the highest and the lowest readings is off by 15% or more, then you might have a bad capacitor. If multiple capacitors are used in the circuit, then you would need to isolate each of them and check them separately to identify which one is defective.
6. Before disconnecting the capacitors, note the location of the cables and mark them accordingly.
7. Disconnect power cables from the capacitor terminals on all four bushings and isolate them from the capacitor (see Filter Capacitor Replacement on page 92).
8. Repeat step 5 to check each capacitor separately to confirm which is defective.

Second Method

1. Verify there is no power to the equipment.

ATTENTION: To prevent electrical shock, disconnect the main power before working on the drive. Verify that all circuits are voltage-free using a hot stick or appropriate voltage-measuring device. Failure to do so may result in injury or death.

ATTENTION: Verify the load is not running due to process. A freewheeling motor can generate voltage that feeds back to the equipment.

2. Inspect the capacitors to verify that there are no oil leaks or bulges.

ATTENTION: Capacitors that appear bulged or are leaking oil indicate potential problems with the internal elements. DO NOT USE. These units must be replaced. Failure to do so may lead to personal injury or death, property damage, or economic loss.

3. Note the location of the cables and mark them accordingly.
4. Disconnect power cables from the capacitor terminals on all four bushings and isolate them from the capacitor (see Filter Capacitor Replacement on page 92).
5. Connect a low voltage single-phase test power, for instance 110V or 220V, across a phase and the neutral of the capacitor. Switch on the test power and measure the test voltage and current drawn by the capacitor. Repeat the test for all three phases and note down the test voltage and current.

ATTENTION: The capacitor charges during this test so take care to prevent a shock or injury. When moving the test connections from one phase to the next, wait a minimum of 5 minutes for the capacitor to discharge.

6. Calculate the capacitance from the measured values of test voltage and current. For a good capacitor, the calculated capacitance value for each of the three readings must be within ±15% of the capacitor nameplate micro-Farad. If it is outside this range, the capacitor must be replaced.

Suppose that a capacitor under test is rated at 400 kVAR, 6600V, 50 Hz, 29.2 µF. Assume that you are using 200V, 50 Hz test power with the recorded voltage and current values for each test as shown in the table below.

Phase - Neutral	L1-N	L2-N	L3-N
Test Voltage	200V	200V	200V
Measured Current	1.87 A	1.866 A	1.861 A

Calculate the capacitance by using the first reading. In this case:

V = 200V, I = 1.87 for L1-N Xc = V/I = 200/1.87 = 106.95 C= 1/ (2 π *F* Xc) C= 1/(2 x 3.14 x 50 x 106.95) C=29.7µ *F*	Where: *F* = frequency of the applied voltage.

Similarly, you can calculate the capacitance for the remaining two measurements for L2-N and L3-N.

Converter Cabinet

The converter cabinet contains three rectifier modules and three inverter modules. Figure 86 shows a 4160V converter with a Pulse Width Modulation Rectifier (PWMR).

Isolated Gate Driver Power Supplies (IGDPS) are mounted on the right side sheet of the cabinet.

Cooling pipes are throughout the cabinet and are connected to each chill block. Unlike the air-cooled drive, thermal sensors are not installed on the chill block. The thermal sensor is located in the pump cabinet.

Converter Cabinet Components

Figure 86 - Converter Cabinet Components (4160V AFE shown)

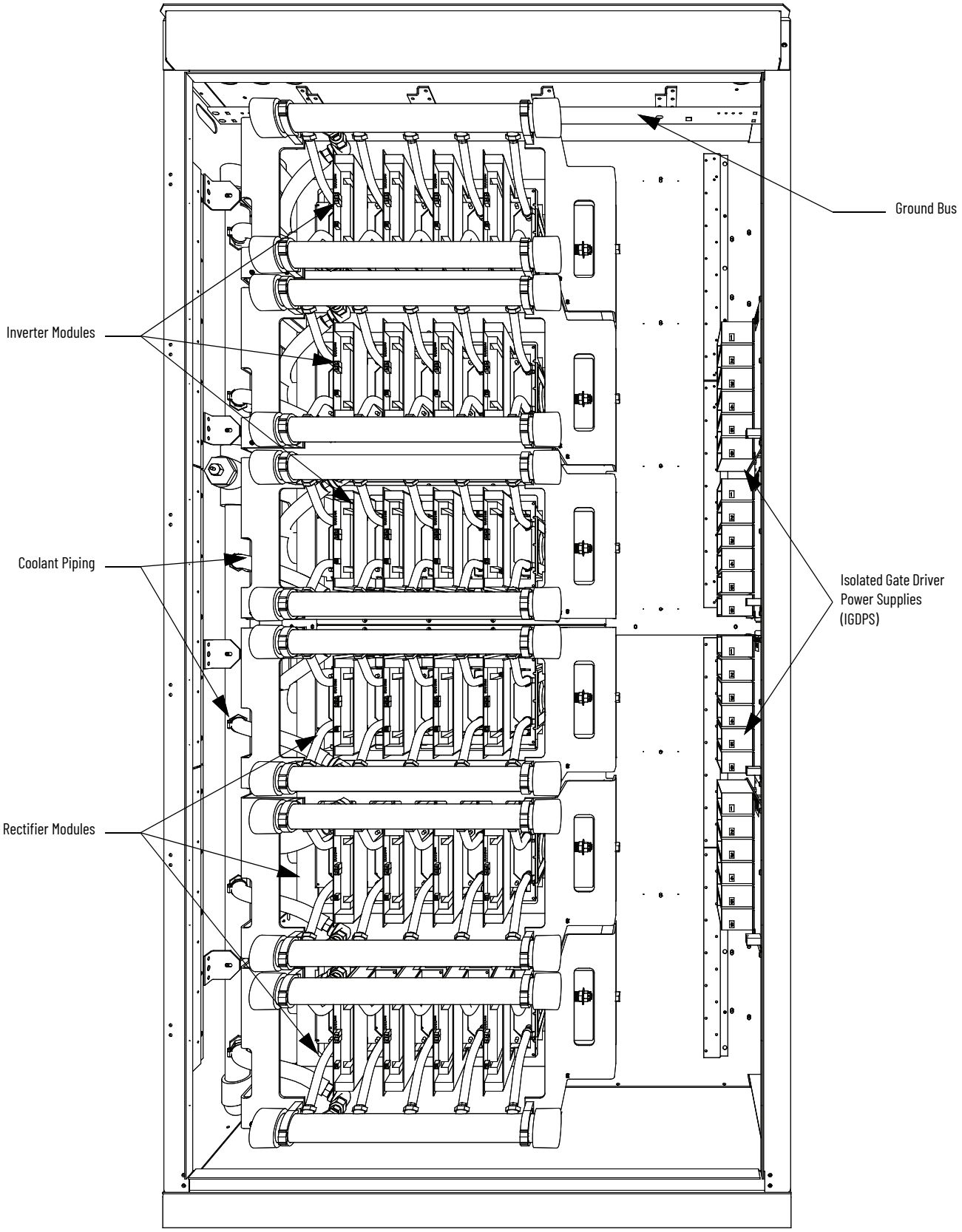

Figure 87 - Converter Cabinet Components (6600V AFE shown)

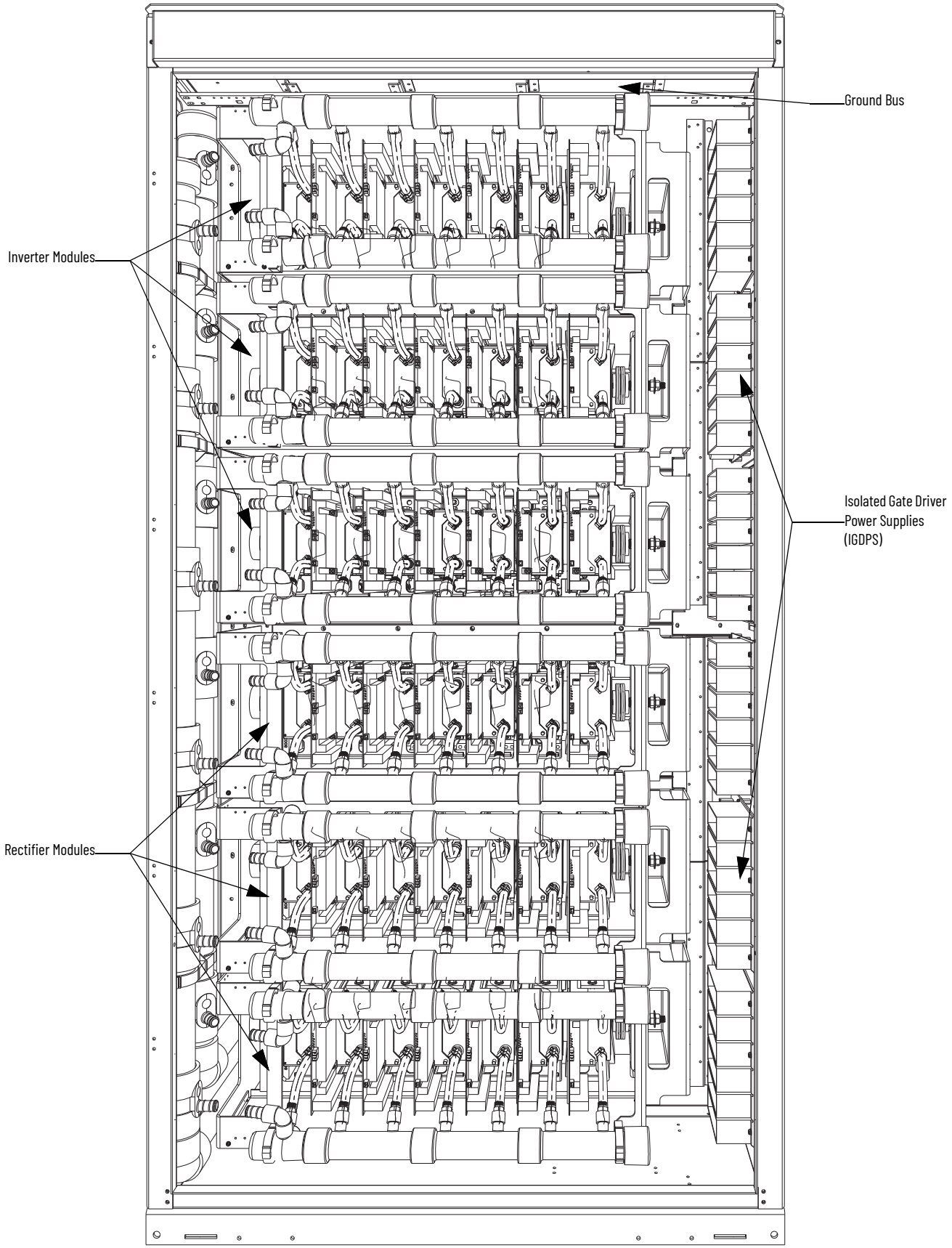

PowerCage

A PowerCage™ is a converter module that consists of the following elements:

- Epoxy resin housing
- Power semi-conductors with gate driver circuit boards
- Chill blocks
- Clamp
- Snubber resistors
- Snubber capacitors
- Sharing resistors
- Piping for coolant to flow to each chill block

Each drive consists of three PowerCage rectifier modules and three PowerCage inverter modules. The liquid-cooled drive has two types of rectifiers – the 18-pulse SCR and the PWM rectifier.

All inverter modules use SGCTs as semi-conductors.

The size of the PowerCage varies depending on the system voltage, and the components vary depending on the system current.

All PWMR modules use SGCTs as semi-conductors.

The power semi-conductor usage in the converter section is as follows:

Configuration	Inverter SGCTs	Rectifier SGCTs	Rectifier SCRs
3300/4160V PWM rectifier	12	12	0
3300/4160V, 18-pulse	12	0	18
6600V, 18-pulse	18	0	18
6600V, PWM rectifier	18	18	0

ATTENTION: To prevent electrical shock, verify the main power has been disconnected before working on the converter cabinet. Verify that all circuits are voltage free using a hot stick or appropriate voltage-measuring device. Failure to do so may result in injury or death.

ATTENTION: The PowerCage can house either SCRs or Silicon Gate Commutated Thyristors (SGCT). The SGCT circuit board is sensitive to static charges. It is important that these boards must not be handled without proper grounding.

ATTENTION: Static charges can destroy some circuit boards. Use of damaged circuit boards can also damage related components. A grounding wrist strap is recommended for handling sensitive circuit boards.

Figure 88 - Four Device PowerCage

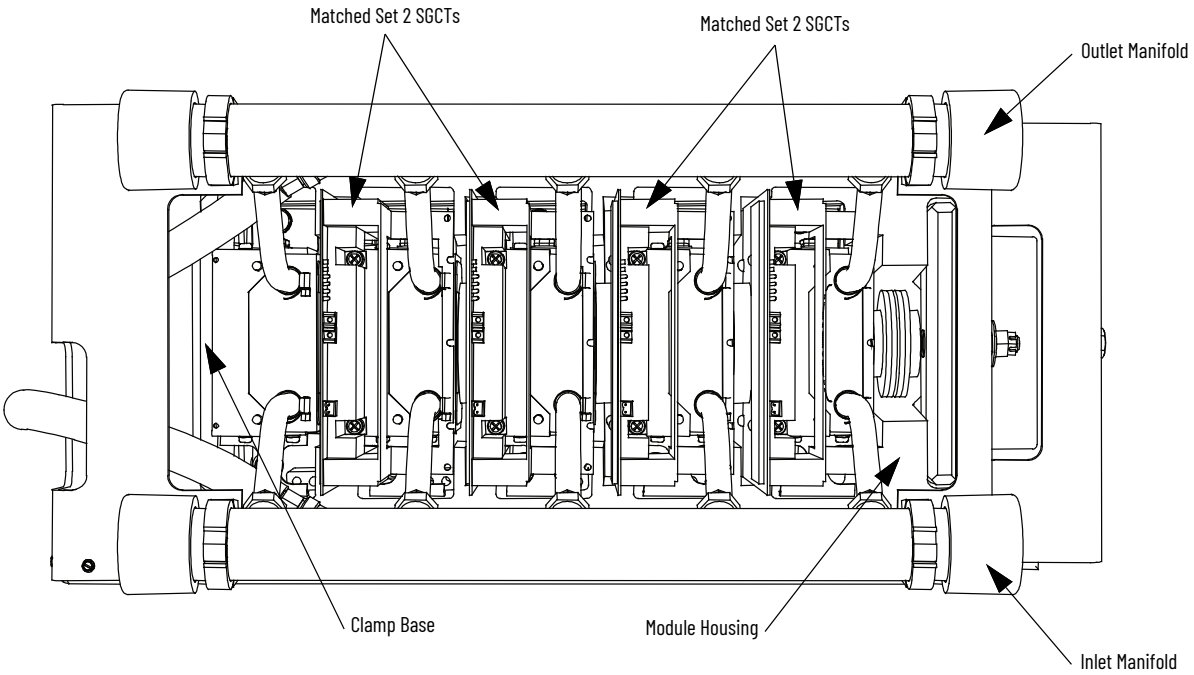

Figure 89 - Six Device PowerCage

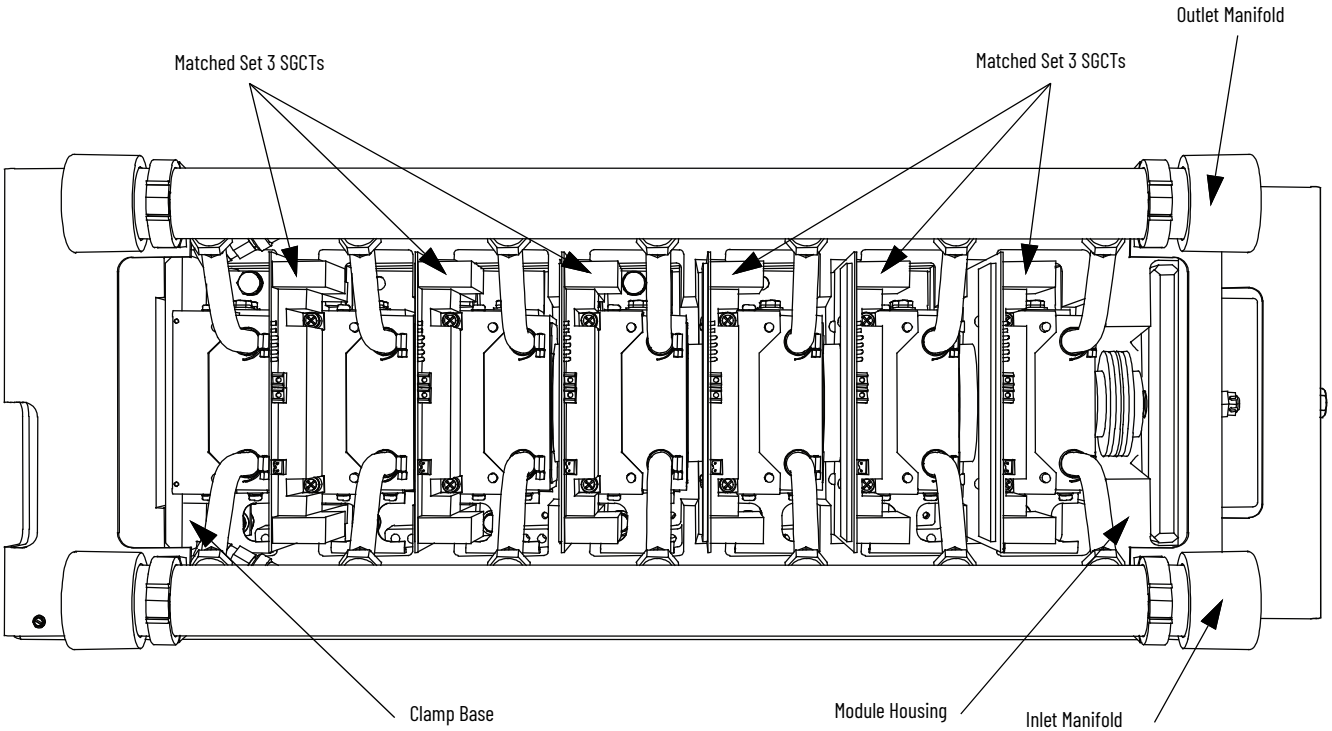

SGCT and Snubber Circuit

Similar to all power-conductors or thyristors, the SGCT must have a snubber circuit. The snubber circuit for the SGCT is composed of a snubber resistor in series with a snubber capacitor.

Figure 90 - SGCT and Snubber Circuit

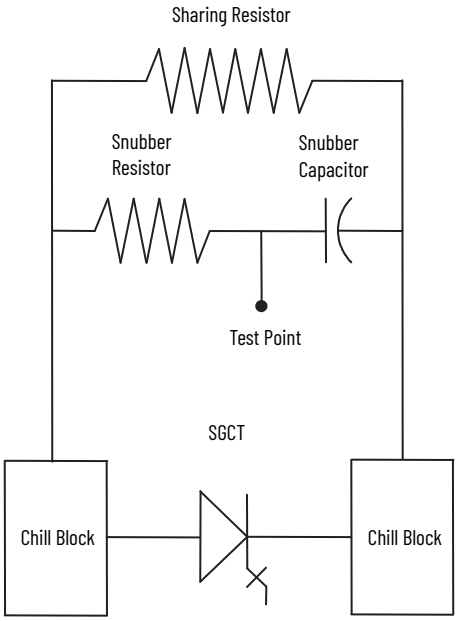

In addition to the snubber circuit, a sharing resistor is connected in parallel with the SGCT. The function of the sharing resistor is to ensure the voltage is shared equally among the SGCTs when connected in series. SGCTs are connected in series to increase the total reverse voltage blocking (PIV) capacity as seen by the electrical circuit. One SGCT has a PIV rating of 6.5 kV. At 4.16 kV, two SGCTs must be connected in series to provide a net PIV of 13 kV to achieve the necessary design margin. Similarly, three SGCTs must be connected in series at 6.6 kV.

The cooling requirements of the SGCT are achieved by placing the SGCT between two liquid-cooled chill blocks – one chill block on the anode and the other chill block on the cathode. The force placed on the SGCTs differs with the size of the device. A 63 mm device (1500A) requires 20 kN. The clamp assembly on the right hand side of the inverter module generates these forces.

Checking Clamping Pressure

Periodically, the clamping force in the PowerCage should be inspected. Ensure there is no power to the equipment.

ATTENTION: To prevent electrical shock, ensure the main power has been disconnected before working on the drive. Verify that all circuits are voltage free using a hot stick or appropriate voltage-measuring device. Failure to do so may result in injury or death.

Figure 91 - Clamp Head Illustration

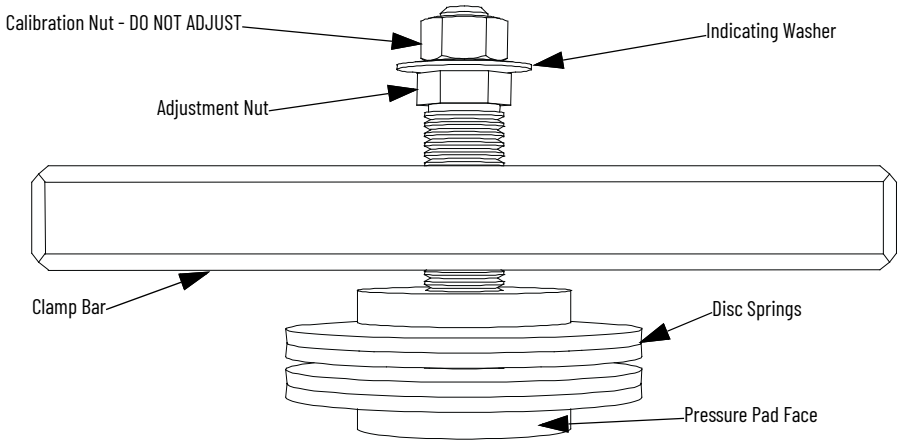

If proper force (as designated on the clamp head block) is applied to the clamping assembly, the indicating washer should just be able to rotate with fingertip touch. The disc should not rotate freely. Some force will need to be applied with your fingertips.

Clamping Pressure Adjustment

1. Ensure that all power to the drive is off.
2. Do not loosen the adjustment nut completely.
3. Tighten with a 21 mm (13/16 in.) open-ended wrench on the adjusting nut (upward motion) until the indicating washer can be turned by fingers with some resistance. IT SHOULD NOT SPIN FREELY.

IMPORTANT Never rotate the calibration nut located outside the indicating washer at the end of the threaded rod. The rotation of the calibration nut will affect the torque calibration, which is factory set. Only adjust the adjusting nut (Figure 92).

Figure 92 - Detail of the Clamping Assembly

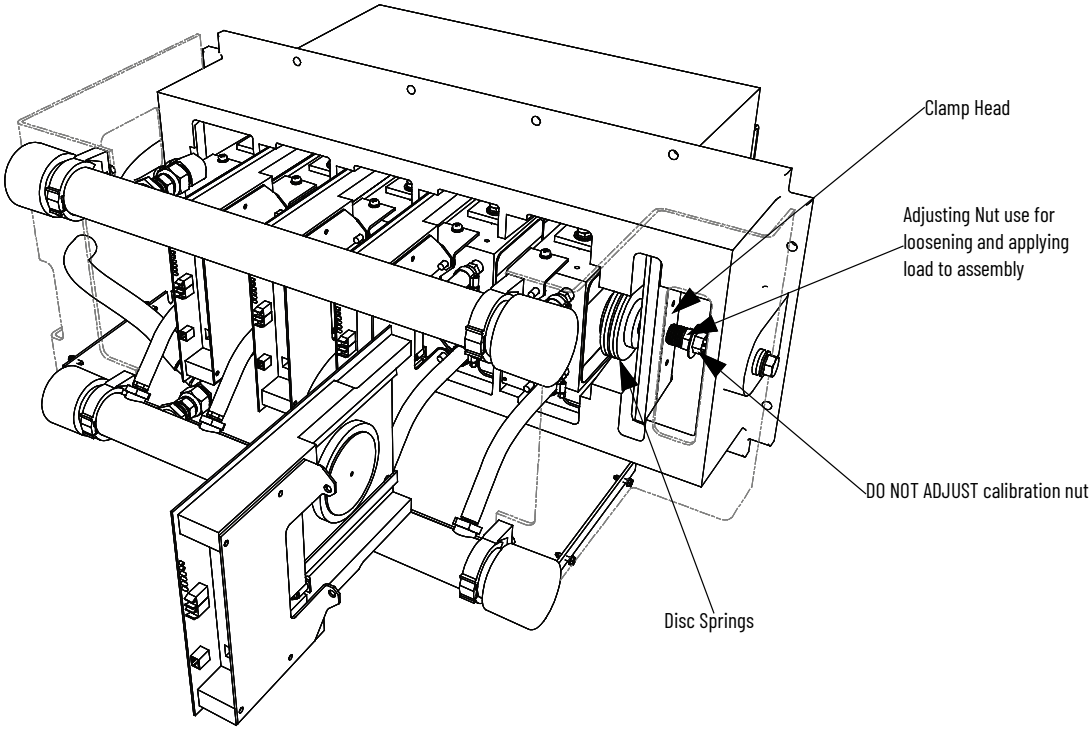

Symmetrical Gate Commutated Thyristor Replacement

The Symmetrical Gate Commutated Thyristor (SGCT or device) with attached circuit board is located within the PowerCage assembly.

SGCTs must be replaced in matched sets:

- 4160V systems use sets of two
- 6600V systems use sets of three

SGCTs can be removed and replaced without interrupting the cooling fluid path.

Figure 93 - Replacing the SGCT

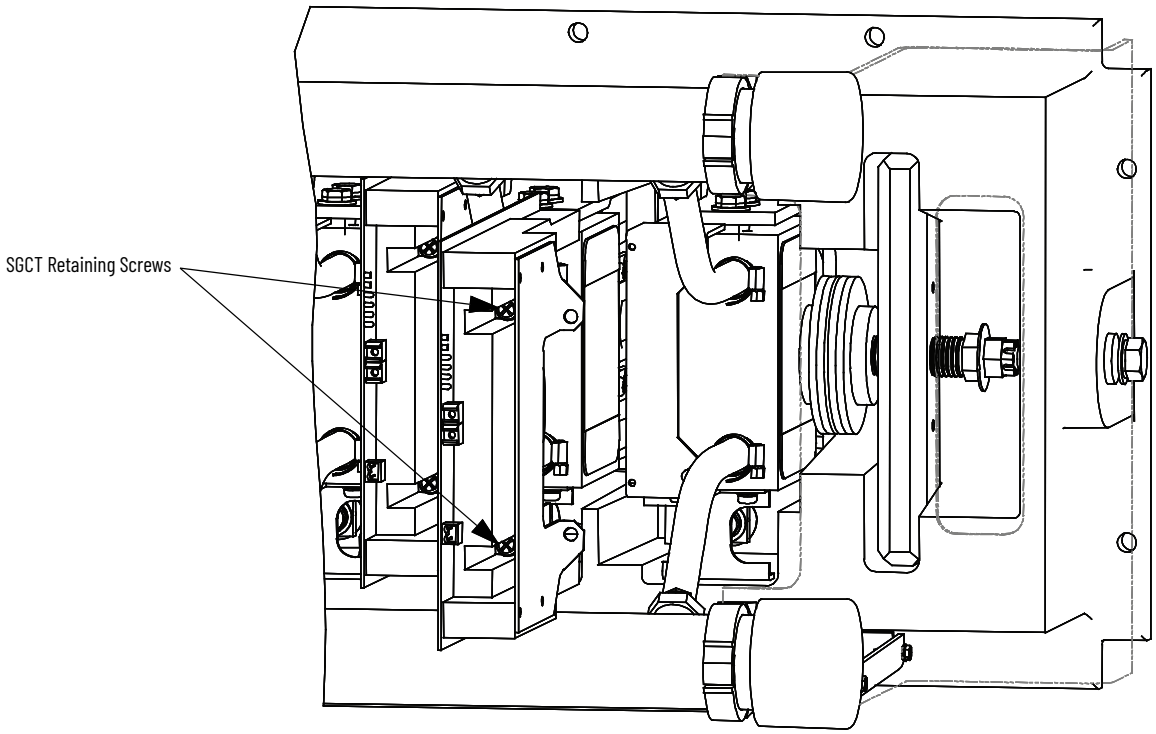

The SGCT and associated control board are a single component. There will never be a time when the device or the circuit board will be changed individually. There are four LEDs on the SGCT.

LED 4	Green	Solid Green indicates that the Power Supply to the Card is OK
LED 3	Green	Solid Green indicates that the Gate-Cathode resistance is OK
LED 2	Yellow	LED ON indicates the gate is ON, and Flashes alternately with LED 4 while gating
LED 1	Red	LED ON indicates the gate is OFF, and Flashes alternately with LED 3 while gating

1. Ensure there is no power to the equipment.

> **ATTENTION:** To prevent electrical shock, ensure the main power has been disconnected before working on the drive. Verify that all circuits are voltage free using a hot stick or appropriate voltage-measuring device. Failure to do so may result in injury or death.

2. Note the position of the fiber optic cables for assembly.
3. To remove the SGCT, it is necessary to remove the gate driver power cable and fiber optic cables. Exceeding the minimum bend radius (50 mm [2 in.]) of the fiber optic cables may result in damage.

ATTENTION: The fiber optic cables can be damaged if struck or bent sharply. The minimum bend radius is 50 mm (2 in.). The connector has a locking feature that requires pinching the tab and gently pulling straight out. The component on the printed circuit board should be held to prevent damage.

4. Remove the load on the clamp head assembly as described in Checking Clamping Pressure on page 101.
5. Two screws secure the board to the chill block. Loosen the captive screws with a long Phillips screwdriver until the circuit board is free. It may be necessary to adjust the position of the chill blocks to allow free movement of the SGCT.
6. SGCTs can now be extracted by pulling the Gate Driver board forward between the upper and lower manifolds. Use a Phillips screwdriver to remove the brace angle of the SGCT. Retain the brace angle and its hardware.

ATTENTION: The SGCT can be destroyed or damaged by static charges. Personnel must be properly grounded before removing the replacement SGCT from the protective anti-static bag that it is supplied in. Use of damaged circuit boards may also damage related components. A grounding wrist strap is recommended for handling sensitive circuit boards.

Figure 94 - Replacing the SGCT – Brace Angle

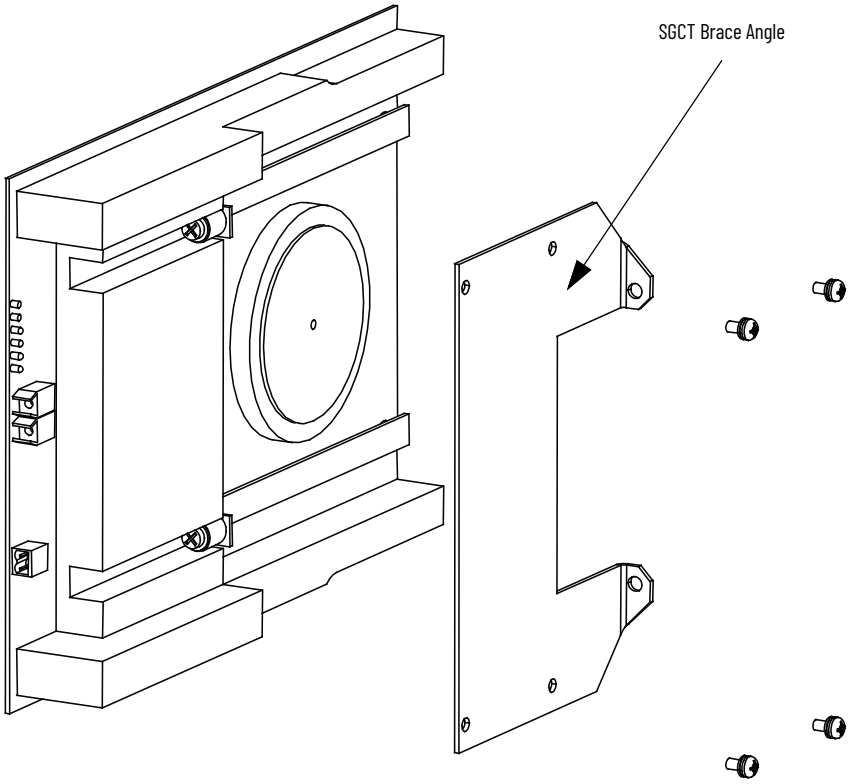

IMPORTANT SGCTs come in matched sets in systems with more than one device per leg. When replacing the device, it is necessary to replace all devices in the matched set even if only one has failed.

7. While grounded, remove the SGCT from the anti-static bag.
8. Assemble the brace angle from the old SGCT to the new SGCT.

9. Apply a thin layer of Electrical Joint Compound (EJC No. 2 or approved equivalent) to the contact faces of the new SGCTs to be installed. The recommended procedure is to apply the compound to the pole faces using a small brush, and then gently wipe the pole face with an industrial wipe so that a thin film remains. Examine the pole face before proceeding to ensure that no brush bristles remain.

IMPORTANT Too much joint compound may result in contamination of other surfaces leading to system damage.

10. Slide the SGCT into place until the mounting brackets contact the surface of the chill block. **Do not force SGCT when inserting into place. Make sure it slides in with little resistance**. Use a Phillips screwdriver to tighten the captive screws to the cathode side of the chill block.
11. Readjust the clamping load as described in Checking Clamping Pressure on page 101.
12. Connect the control power cable and fiber optic cables (ensure the bend radius is not exceeded).

Silicon Controlled Rectifier and SCR Self-Powered Gate Driver Board Replacement

The method for replacing the Silicon Controlled Rectifier (SCR) is almost identical to that of the SGCT. The one exception is that the SCR and circuit board can be replaced independently of one another.

1. Ensure there is no power to the equipment.

ATTENTION: To prevent electrical shock, ensure the main power has been disconnected before working on the drive. Verify that all circuits are voltage free using a hot stick or appropriate voltage-measuring device. Failure to do so may result in injury or death.

2. Note the position of the fiber optic cables for reassembly.
3. To Remove the SCR and SCR SPGDB, it is necessary to remove the Gate Driver Power Supply connector (from snubber circuit), the fiber optic cable, and the SCR gate-cathode connection. Exceeding the minimum bend radius (50 mm/2 in.) of the fiber optic cables may result in damage.

ATTENTION: The fiber optic cables can be damaged if struck or bent sharply. The minimum bend radius is 50 mm (2 inches). The connector has a locking feature that requires pinching the tab and gently pulling straight out. The component on the printed circuit board should be held to prevent damage.

4. Remove the load on the clamp head as described in Checking Clamping Pressure on page 101.
5. Loosen the 2 captive screws with a long Phillips screwdriver until the circuit board is free. It may be necessary to adjust the position of the chill blocks to allow free movement of the SCR.
6. Slide the SCR and SCR SPGD Board straight out.
7. While grounded, unplug the Gate-Cathode phoenix connector from the SCR SPGD Board.

ATTENTION: The SCR and SCR SPGD Board can be destroyed or damaged by static charges. Personnel must be properly grounded before removing the replacement SCR and SCR SPGD Board from the protective anti-static bag that it is supplied in. Use of damaged circuit boards may also damage related components. A grounding wrist strap is recommended for handling sensitive circuit boards.

IMPORTANT Never adjust the orientation of the SCR by pulling the Gate and Cathode Leads. These connections are sensitive and the device orientation should only be adjusted by turning the device itself.

IMPORTANT To replace the SDCCR, follow steps 8...11 and 16...18.

IMPORTANT To replace the SCR SPGD board, follow steps 12...15 and 16...18.

8. Remove the tie wrap holding the G-C wire in place, and remove the device from the assembly.
9. Install the new device in the same position and using the same orientation as the original SCR, and firmly secure the G-C wires with a tie wrap.
10. Connect the Gate-Cathode phoenix connector to the Gate Driver Board.
11. Apply a thin layer of Electrical Joint Compound (EJC No. 2 or approved equivalent) to the contact faces of the new SCRs to be installed. The recommended procedure is to apply the compound to the pole faces using a small brush and then gently wiping the pole face with an industrial wipe so that a thin film remains. Examine the pole face before proceeding to ensure that no brush bristles remain.

IMPORTANT Too much joint compound may result in contamination of other surfaces leading to system damage.

Figure 95 - SCR Removal

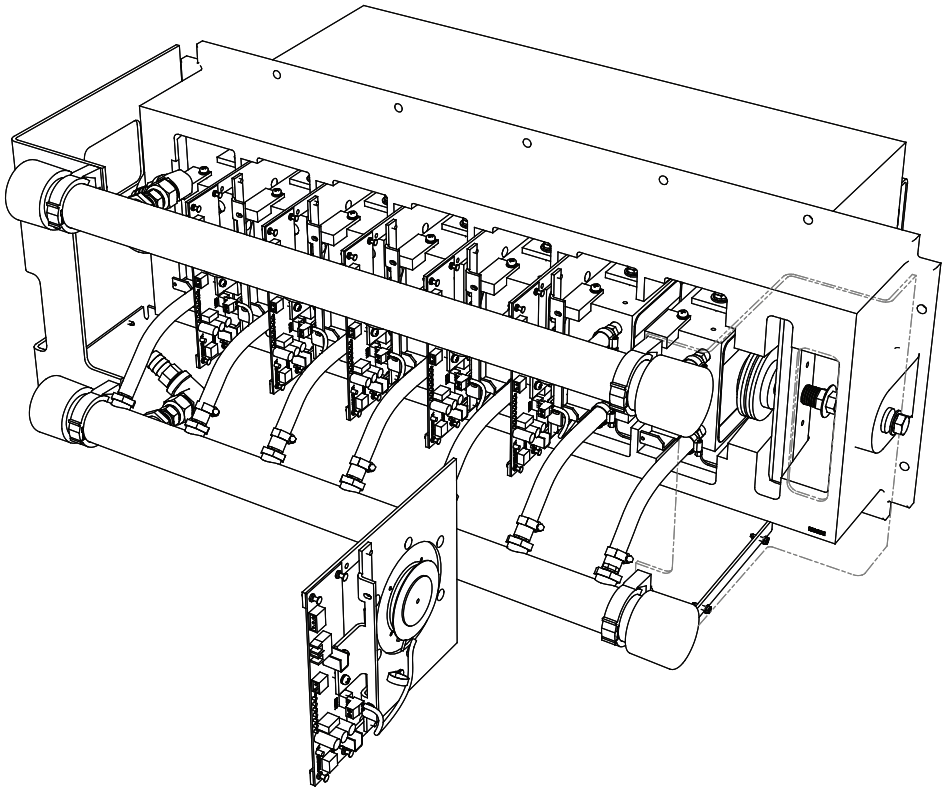

12. While grounded, use a long Phillips screwdriver to remove the two screws that hold the SCR SPGD Board to the metal bracket on the red glastic assembly. Retain the hardware.
13. Pull the 4 plastic clips that secure the SCR SPGD board to the glastic assembly. Retain the hardware.
14. Install the new SCR SPGD Board in the assembly with the 4 plastic clips and use the screws to secure the board to the metal bracket.
15. Connect the Gate-Cathode phoenix connector to the Gate Driver Board.

16. Slide the SCR and SCRGD Board back into place until the mounting bracket makes contact with the chill block. Use the Phillips screwdriver to tighten the assembly to the chill block.
17. Readjust the clamping load as described in Checking Clamping Pressure on page 101.
18. Connect the control power cable and the fiber optic cables, ensuring that the bend radius is not exceeded.

Figure 96 - SCR and SPGDB Assembly

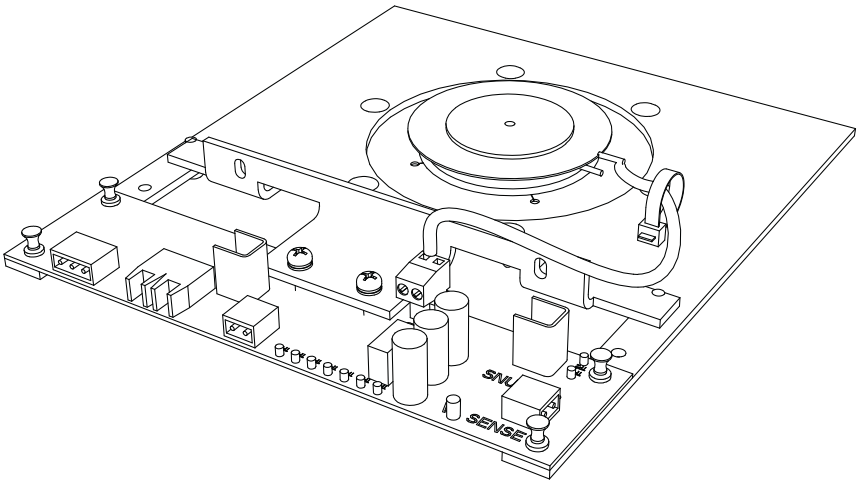

Detachment of Coolant System from PowerCage Modules

If service is required for snubber components, it will be necessary to extract a chill block assembly from a converter PowerCage module in order to access the snubber and sharing resistors. To avoid draining coolant from the entire converter, it is possible to isolate the fluid path of one converter module from the remainder of the drive using the following technique:

1. Ensure that power has been disconnected.
2. Ensure all pumps have been turned off. Allow the system to cool down before servicing any components in the coolant system.
3. Remove all SCR/SGCT devices and their circuit boards as outlined in Silicon Controlled Rectifier and SCR Self-Powered Gate Driver Board Replacement on page 105 and Symmetrical Gate Commutated Thyristor Replacement on page 103.
4. Drape a waterproof plastic sheet over all the devices under the PowerCage being serviced. Personnel must wear suitable protective personal gear to avoid direct contact with the coolant (ethylene glycol – water mixture).
5. Two flow restrictor clamps per Figure 97 are provided with the spare parts kit of each drive.

Figure 97 - Flow Restrictor Clamp

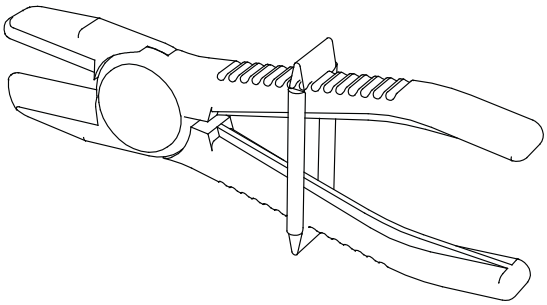

Also required are two pieces of 3/8 in. hose (included) in spare parts kit and four M10 bolts with a length from 10...30 mm for use as plugs in the 3/8 in. hose (not included). See Figure 98. M10 bolts must be clean.

Figure 98 - Flow Stopper for Servicing (two required)

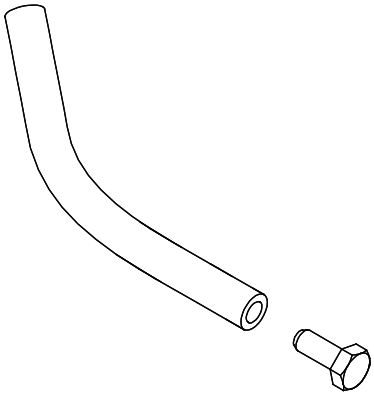

6. Insert the two clamps per Figure 99 on the 19 mm (3/4 in.) silicon hoses to isolate flow between the vertical manifolds and the horizontal manifolds of the converter modules.

Figure 99 - Converter PowerCage Module (Service – per Step 6)

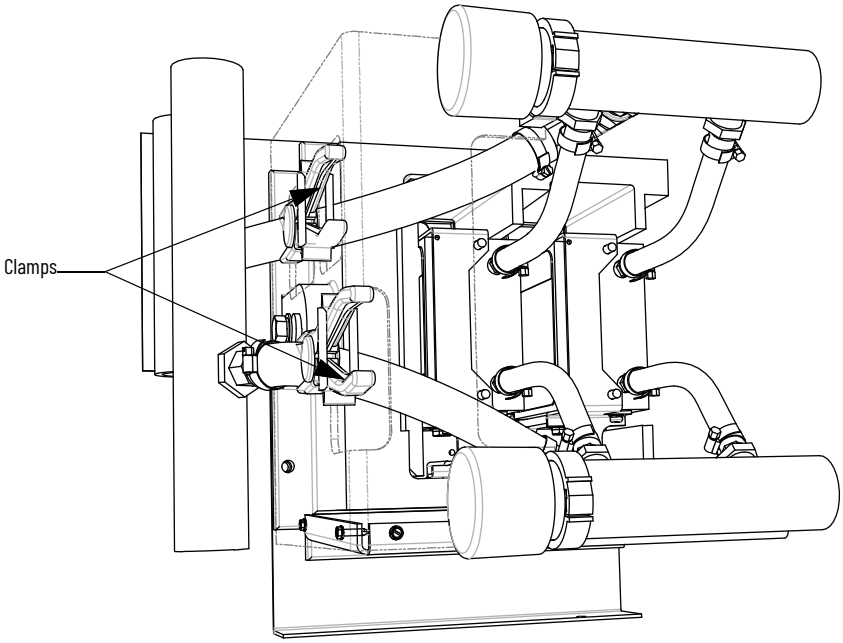

Loosen the hose clamp of the top hose of the outlet manifold of the chill block to be serviced. Slide the hose clamp toward the chill block.

IMPORTANT	Depending on the drive configuration, there could be one or two hose clamps connecting the hose to the outlet manifold.

7. Have a hose plug assembly and a M10 bolt ready. Per Figure 100, pull the hose from the upper manifold hose barb and collect the fluid in a container.

Figure 100 - Converter PowerCage Module (Service – per Step 7)

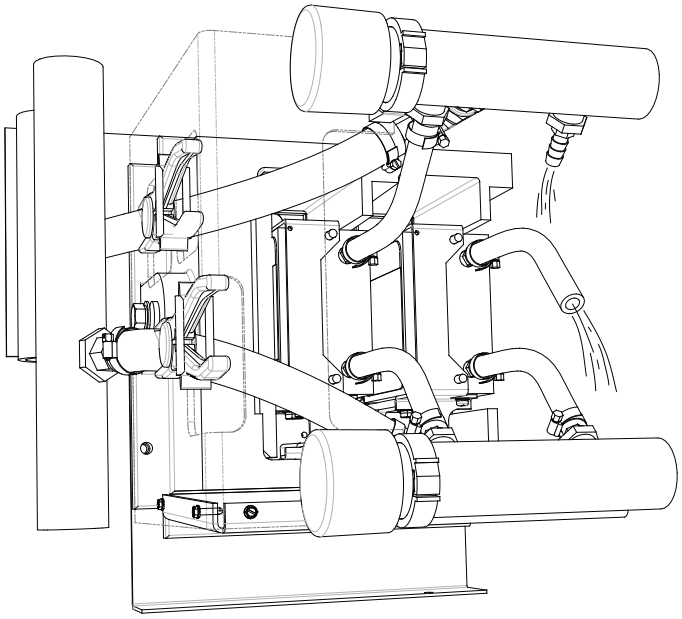

8. Per Figure 101, insert the hose plug on the hose barb of the upper manifold. Insert a M10 bolt in the end of the chill block hose. Note that there may still be limited fluid leakage during this procedure.

Figure 101 - Converter PowerCage Module (Service – per Step 8)

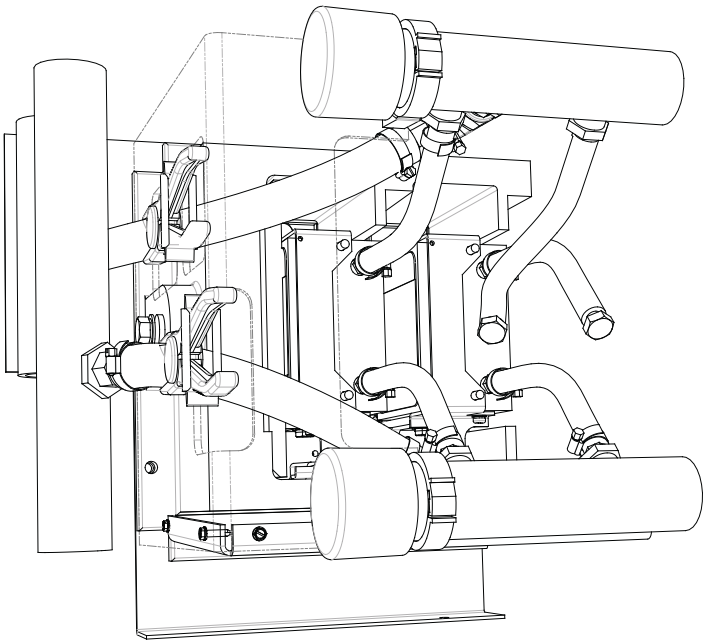

Repeat this procedure for the lower manifold connection point. The chill block can be extracted from the PowerCage per Chill Block Replacement on page 110.

Reconnecting the Coolant System to a PowerCage Module

1. Ensure all power is off and locked-out, including the pumping system.
2. Ensure a blanket or plastic sheet is covering the devices below the PowerCage being serviced. Face shield and full arm chemical resistant gloves should be worn at all times when performing this task.
3. Attach both the inlet and outlet manifolds to their bracketry, and close all the pipe clamps.
4. If necessary, remove the device that blocks the left outlet hose and reconnect it to the lower nipple on the chill block to the extreme left. Tighten the hose clamp. Repeat this step for all outlet hoses, and then all inlet hoses.
5. Replace all SGCT/SCR devices and circuit boards as described in Silicon Controlled Rectifier and SCR Self-Powered Gate Driver Board Replacement on page 105 and Symmetrical Gate Commutated Thyristor Replacement on page 103.
6. Verify there is still enough coolant in the system. If coolant must be added, refer to Fluid Top-up on page 141.

Chill Block Replacement

Follow these procedure to replace your chill block assembly.

IMPORTANT The chill block assembly design changed in mid-2023. The form and function is the same. Regardless of your chill block design, the replacement procedure is the same.

Chill Block Design Since Mid-2023

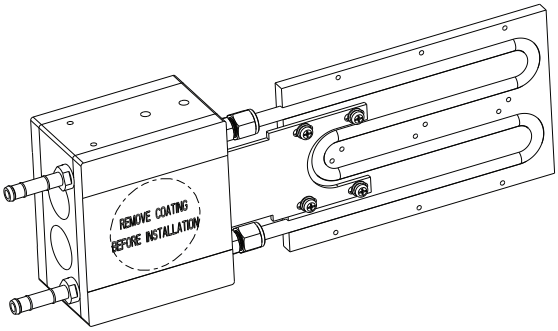

Chill Block Design Prior to Mid-2023

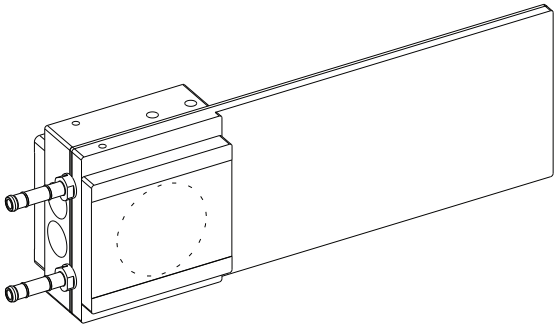

Remove the Chill Block Assembly

1. Verify that power has been disconnected.

ATTENTION: To prevent electrical shock, verify the main power has been disconnected before working on a module. Verify that all circuits are voltage free using a hot stick or appropriate voltage-measuring device. Failure to do so may result in injury or death.

2. Remove SCR/SCGT(s) and circuit boards outlined in Symmetrical Gate Commutated Thyristor Replacement on page 103 and Silicon Controlled Rectifier and SCR Self-Powered Gate Driver Board Replacement on page 105.

ATTENTION: Static charges can destroy or damage the SGCT and SCR boards. Personnel must be properly grounded before removing circuit boards from the PowerCage. Use of damaged circuit boards can also damage related components. A grounding wrist strap is recommended for handling.

3. Detach coolant hoses from upper and lower manifolds. This procedure is more clearly explained in Detachment of Coolant System from PowerCage Modules on page 107.
4. Use a 14 mm socket with an extension of at least 40 cm. Remove the M8 bolt on the bottom flange of the chill block, which connects the chill block assembly to the PowerCage.
5. If present, remove the M10 bolt at the top of the chill block using a 17 mm socket with an extension of at least 40 cm.
6. Slowly and carefully pull the assembly out of the PowerCage.

ATTENTION: The chill block assembly is heavy and it is recommended that two people pull the assembly out to avoid damage.

Figure 102 - Chill Block Removal and Replacement

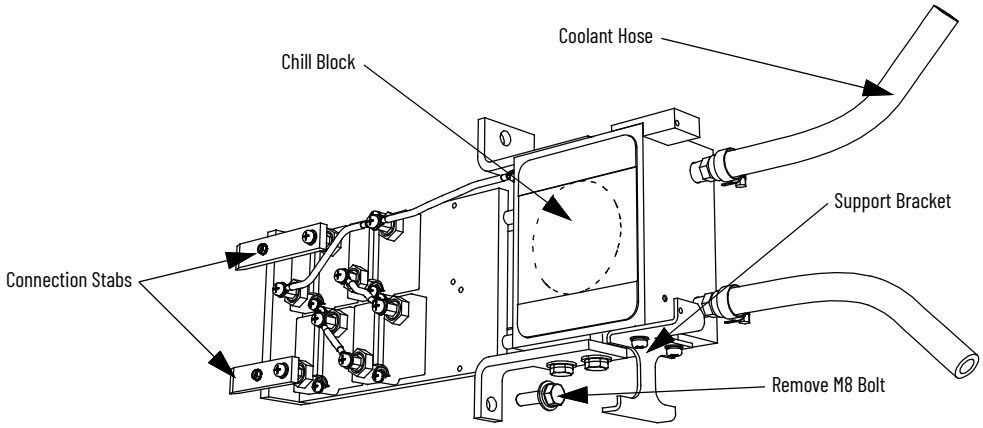

Insert the Chill Block Assembly

1. Verify all power is disconnected.

ATTENTION: Remove plastic film from chill block before installation. Failure to remove the film results in device failure.

2. Remove the protective film from the chill block.
3. Slowly push the chill block assembly into the PowerCage. Ensure that the stabs are aligned with their connectors at the back of the PowerCage. This is difficult to see. When the stabs are properly aligned and in place, the chill block assembly is seated squarely and the support bracket should be resting on the PowerCage base when positioned correctly.

   If the stabs are not seated properly in the brackets, damage can occur. Measure the snubber resistance and sharing resistance to ensure that contact has been made. If rear access to the drive is available, remove backplates and visually verify.

4. When the chill block stabs are properly positioned, replace the M8 and M10 bolts and tighten. Magnetized sockets are recommended with 40 cm extensions.
5. Reconnect the coolant system to the chill blocks. Reconnecting the coolant system before reinstalling the SCR/SGCTs ensures no coolant is spilled on the devices or circuit boards.
6. Replace SCR/SGCT and circuit boards explained in Symmetrical Gate Commutated Thyristor Replacement on page 103 and Silicon Controlled Rectifier and SCR Self-Powered Gate Driver Board Replacement on page 105.
7. Readjust the clamping load as described in Checking Clamping Pressure on page 101.

PowerCage Replacement

1. Verify there is no power to the equipment.

ATTENTION: To prevent electrical shock, ensure the main power has been disconnected before working on the drive board. Verify that all circuits are voltage free using a hot stick or appropriate voltage-measuring device. Failure to do so may result in injury or death.

2. Before removing the PowerCage, all the components located within the PowerCage need to be removed to avoid any damage to the components. Consult the required sections to remove clamping pressure, SGCT and SCR boards, detachment of cooling system, and chill block removal.

ATTENTION: Static charges can destroy or damage the SGCT and SCR boards. Personnel must be properly grounded before removing circuit boards from the PowerCage. Use of damaged circuit boards may also damage related components. A grounding wrist strap is recommended for handling.

3. With the components removed, detach the manifold assembly by removing the bolts on the outer flange. Carefully lift the PowerCage down, placing the front face down. Do not overtorque these bolts when replacing the PowerCage.

IMPORTANT The PowerCage is heavy. Rockwell Automation recommends that two people extract the PowerCage from the drive to prevent injury or damage.

4. When replacing the PowerCage, it is important to place the bolts on the outer flange loosely. Torque bolts alternately on one flange and then the opposite flange to ensure even tightening of the module. A suggested sequence for torquing PowerCage bolts is shown in Figure 103.

IMPORTANT When replacing the PowerCage, always be sure all the PowerCage components are removed.

5. After the PowerCage is securely fastened to the backplane refer to the appropriate sections to replace all other components.

Figure 103 - Typical Torque Sequence

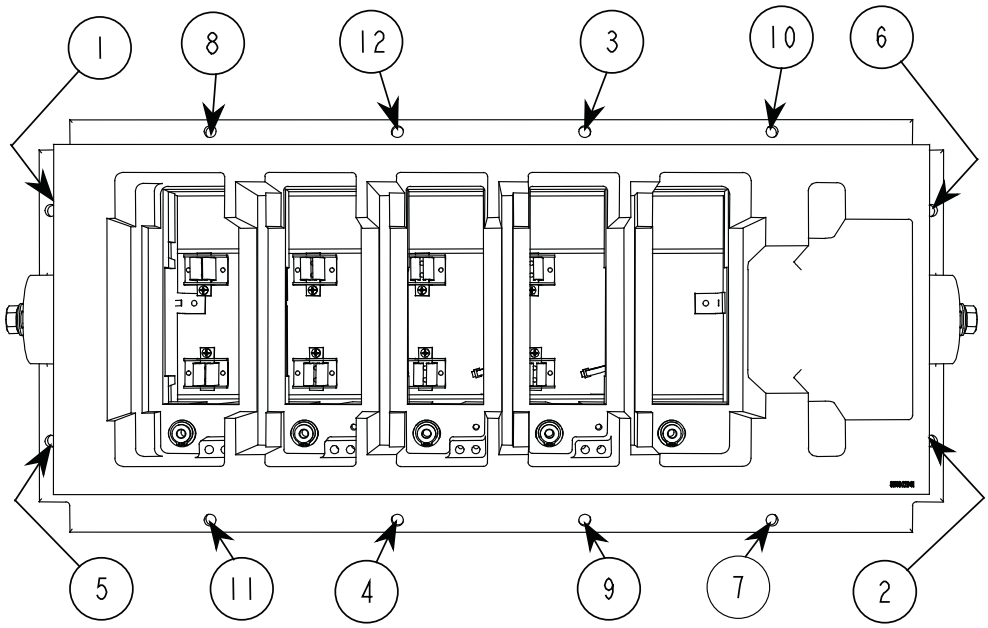

Snubber Resistors

A test point is provided inside the PowerCage to measure the resistance of the snubber resistor and capacitance of the snubber capacitor. The test point is the electrical connection between the snubber resistor and snubber capacitor. The procedure is to place one probe of the multi-meter on the test point and the other probe on the appropriate chill block to determine the value of the resistor or capacitor.

Snubber resistors are connected in series with the snubber capacitors. Together they form a simple RC snubber that is connected across each semiconductor (SCR or SGCT). The purpose of the snubber circuit is to reduce the dv/dt stress on the semiconductors and to reduce the switching losses. The snubber resistors are connected as sets of thick film resistors. The number of resistors depends on the type of the semiconductor and the configuration and frame size of the drive.

Testing Snubber Resistors

Access to the snubber resistor is not required to test the resistance. Located within the PowerCage under the chill block is a snubber resistor test point. For each device, there is one test point.

Figure 104 - Testing the Snubber Resistor

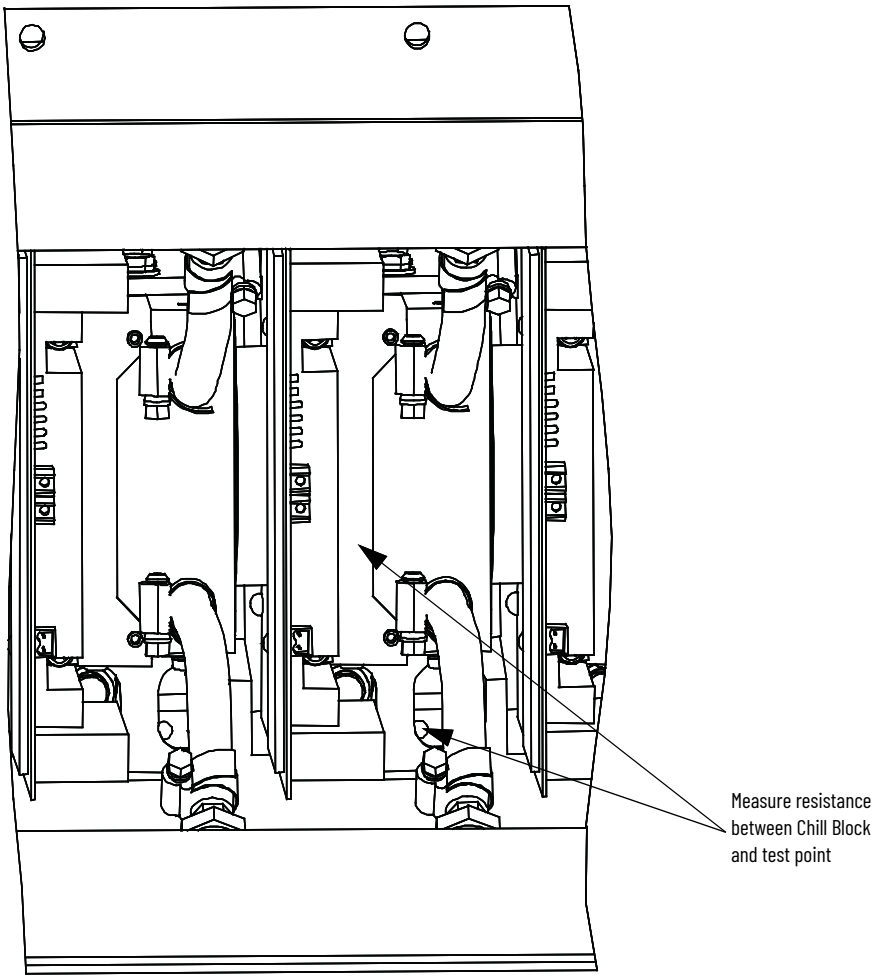

Sharing Resistors

The anode-cathode resistance check will measure the parallel combination of the sharing resistor and SGCT anode-cathode resistance. The sharing resistor has a resistance much lower than a good SGCT, thus the measurement will be slightly less than the resistance of the sharing resistor. A measurement between 60...75 kΩ indicates that the SGCT is in good condition and that wiring to the SGCT is correct. If the SGCT fails, it may be shorted. The anode to cathode resistance check is 0 Ω for a complete short, but SGCT can fail when partially shorted.

Sharing resistors provide equal sharing of the voltage when matched devices are used in series. Sharing resistors in SCR PowerCages provide a diagnostic function.

Testing Sharing Resistors

SGCT PowerCage

To determine the sharing resistor value, simply measure the resistance between the anode and cathode chill blocks. A value between 60...75 kΩ indicates a good sharing resistor.

Figure 105 - SGCT PowerCage

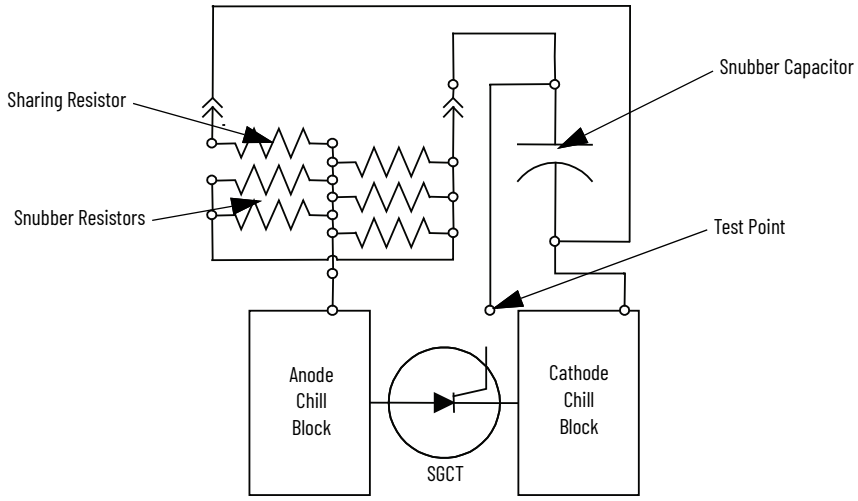

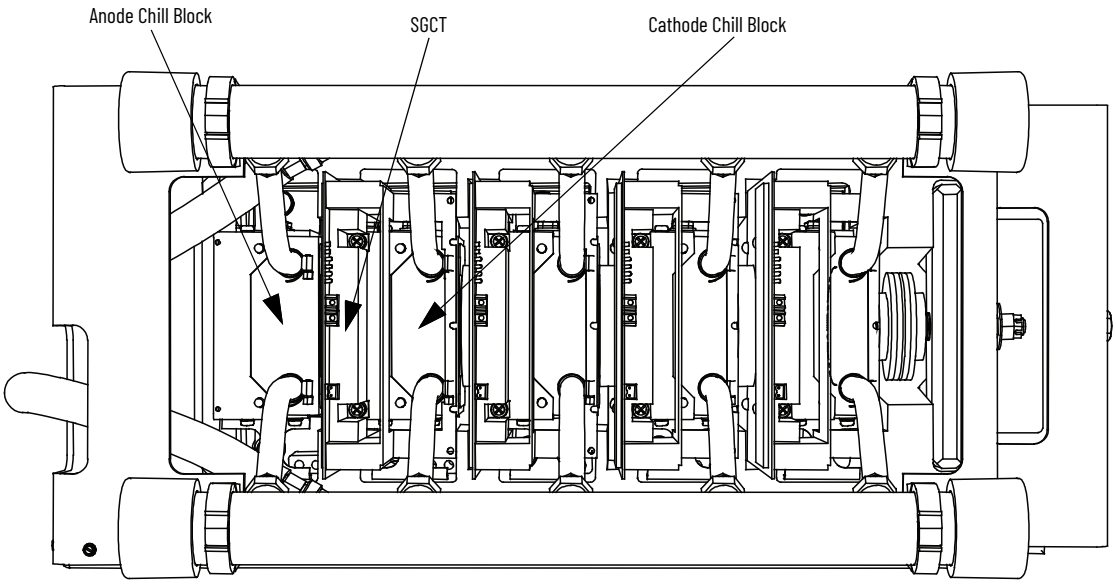

SCR PowerCages

To obtain the sharing resistor value, disconnect the 2-pole plug of the self-powered gate driver board labeled SHARING and SNUBBER on the circuit board. The red wire of the plug is the sharing resistor. Measure the resistance between the red wire of the plug and the chill block to the left (the anode chill block). A value of approximately 80 kΩ indicates a healthy sharing resistor.

Figure 106 - SCR PowerCage Snubber Circuit Connections

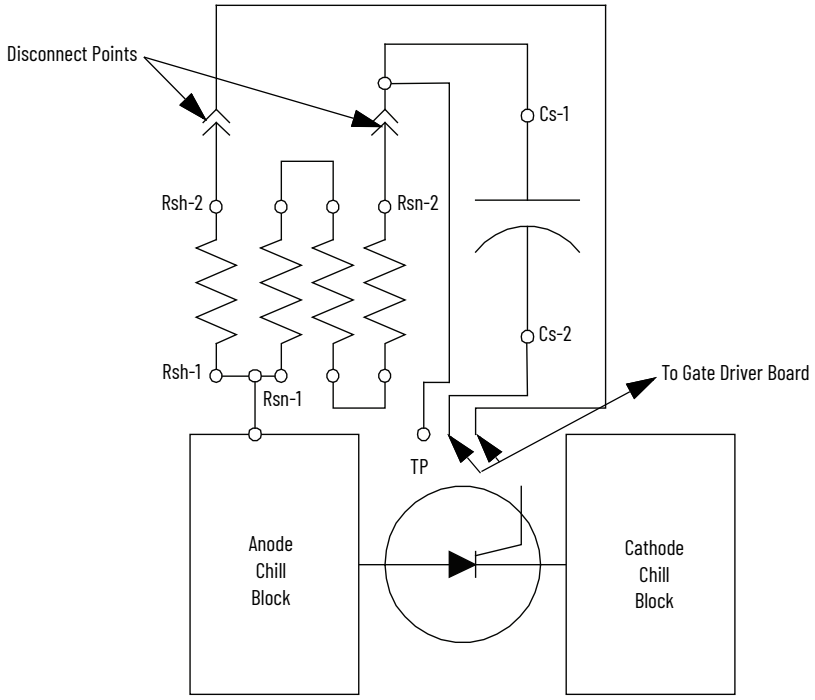

Snubber and Sharing Resistor Replacement

In the liquid-cooled drive, the sharing and snubber resistors can be replaced independently. The sharing resistor is located in the same spot on every chill block assembly, and the number of snubber resistors can vary with the drive rating. The snubber and sharing resistors are part of the chill block assembly. Servicing of resistors requires that the chill block be removed from the PowerCage. Refer to Chill Block Replacement on page 110.

1. Remove the chill block outlined in Chill Block Replacement on page 110.
2. Note all connections for correct replacement.
3. Remove the screws holding the bus bars to the resistor terminals. The position of the sharing resistor is common on all drive sizes. The number of snubber resistors varies with the size of drive and application. Shown below is a three-snubber resistor configuration. There can be up to five snubber resistors on each chill block.

Figure 107 - Snubber and Sharing Resistor Replacement

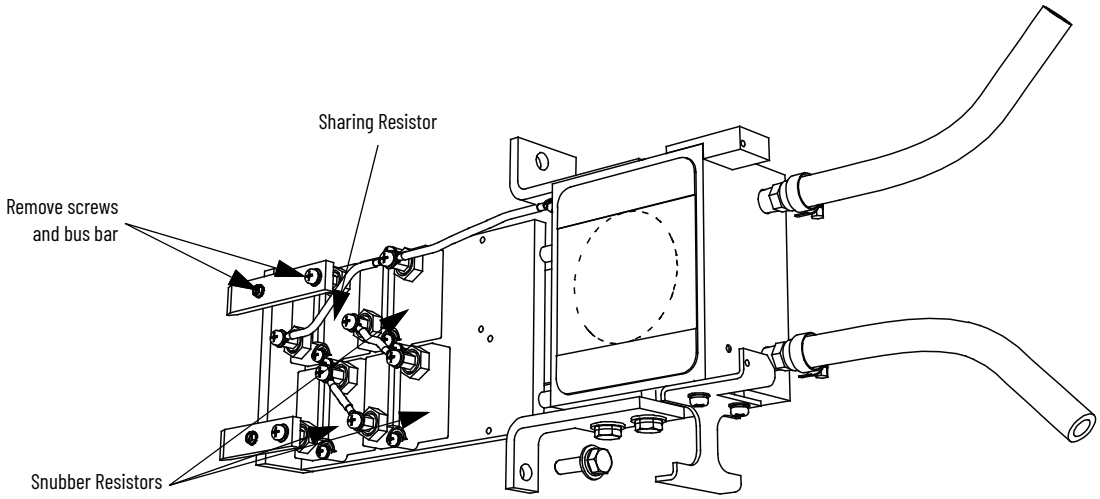

4. After removing the bus bars, unscrew the two screws holding each resistor in place. Measure each resistor on the assembly to verify which resistors are damaged.
5. Apply a thin layer of Electrical Joint Compound (EJC No.2 or approved equivalent) to the contact faces of the new resistors to be installed. The recommended procedure is to apply the compound to the pole faces using a small brush and then gently wiping the pole face with an industrial wipe so that a thin film remains. Examine the pole face before proceeding to ensure that no brush bristles remain.
6. Install the new resistor(s) on the chill plate and replace the M4 mounting screws.
7. When all damaged snubber resistors have been replaced, re-assemble the bus bars with the original hardware.
8. Re-connect any leads that were removed.
9. Install the chill block assembly as described in Chill Block Replacement on page 110. Readjust the clamping load as described in Checking Clamping Pressure on page 101.
10. Verify the snubber and sharing resistances.

Snubber Capacitor Replacement

The snubber capacitors are part of the capacitor assembly located behind the PowerCage module.

IMPORTANT	If the drive can be accessed from the rear, the snubber capacitors can be removed and replaced from the rear, with the PowerCage modules in place. If the drive cannot be accessed from the rear, the PowerCage modules must be removed to access the snubber capacitors. See PowerCage Replacement on page 113. Replace the capacitors one at a time. Do not remove all at once.

1. Using a 13 mm socket wrench, remove the M8 bolt on the end of the capacitor and retain hardware.
2. Hand rotate the capacitor counter-clockwise to unscrew it from the threaded stud connecting it to the PowerCage module.
3. Apply a drop of Loctite 425 to the thread of the 25 mm flange side of the replacement capacitor.
4. Hand-tighten the replacement capacitor onto the threaded stud.

ATTENTION: You must insert the capacitor in the correct orientation. The 25 mm flange must be connected to the threaded stud on the PowerCage module.

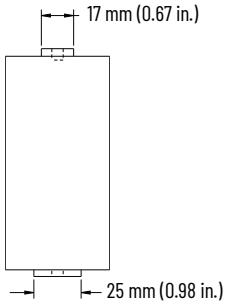

5. Connect the electrical leads and hardware on the 17 mm flange side of the replacement capacitor.

   Torque M8 hardware to 7 N•m (60 lb•in).

Figure 108 - Rear View of 7000L PowerCage

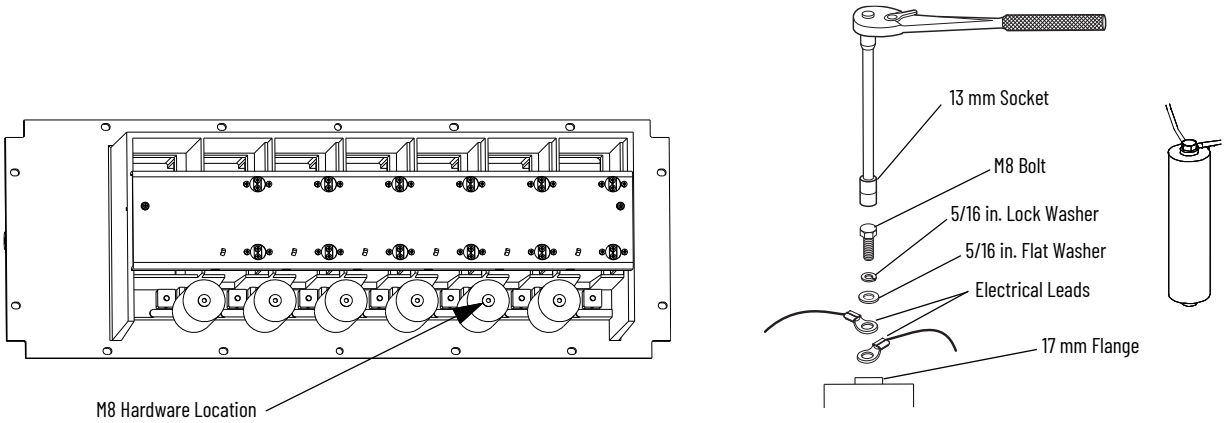

6. Bundle and secure the connecting wires using wire ties.

Self-Powered Gate Driver Board – SPGDB

Description

This board is used in drives where SCRs are used as the rectifying device on the input of the drive. The SCRs require a gating pulse in order to turn on, and this is achieved by using the SPGDB.

The SPGDB receives its command from the drive processor, via a light signal, which is transmitted through a fiber optic cable. The power source for the SPGDB is from the snubber network of the SCR, a patent pending design of Rockwell Automation. This unique design gives the SPGDB the ability to conserve the amount of energy that it supplies to the SCR. This reduces the amount of energy required by the drive to operate, thus making the drive more efficient.

Also, this board will determine the health of the SCR. It has the hardware necessary to diagnose the condition of the SCR. This status is relayed to the processor via a fail-safe light signal transmitted through a fiber optic cable.

Board Calibration

No field calibration is required for this board.

Test Points Description

TP1 – SCR gate output (attach oscilloscope between TP1 and TP2 to see gating pulses).

TP2 – SCR cathode output.

TP3 – Common reference point for all other test point measurements, except for TP1, which uses TP2 as its reference point.

TP4 – The positive 20 V rail used for the SPGDB operation.

TP5 – The positive 5 V rail used for the SPGDB operation.

TP6 – The sense voltage taken from the sense resistor across the SCR being controlled.

TP7 – Trigger signal, which remains active for a fixed period of time after the SCR being controlled, has turned on and the voltage across it has collapsed.

TP8 – Internal gating signal that indirectly turns on the SCR that is being controlled.

TP9 – Gating signal received from the commanding drive control board, through the appropriate fiber optic cable.

The yellow LED (LED 1) on the SPGDB indicates that the SCR being controlled has a gating current flowing which is used to turn the SCR on.

Figure 109 - Self-Powered Gate Driver Board

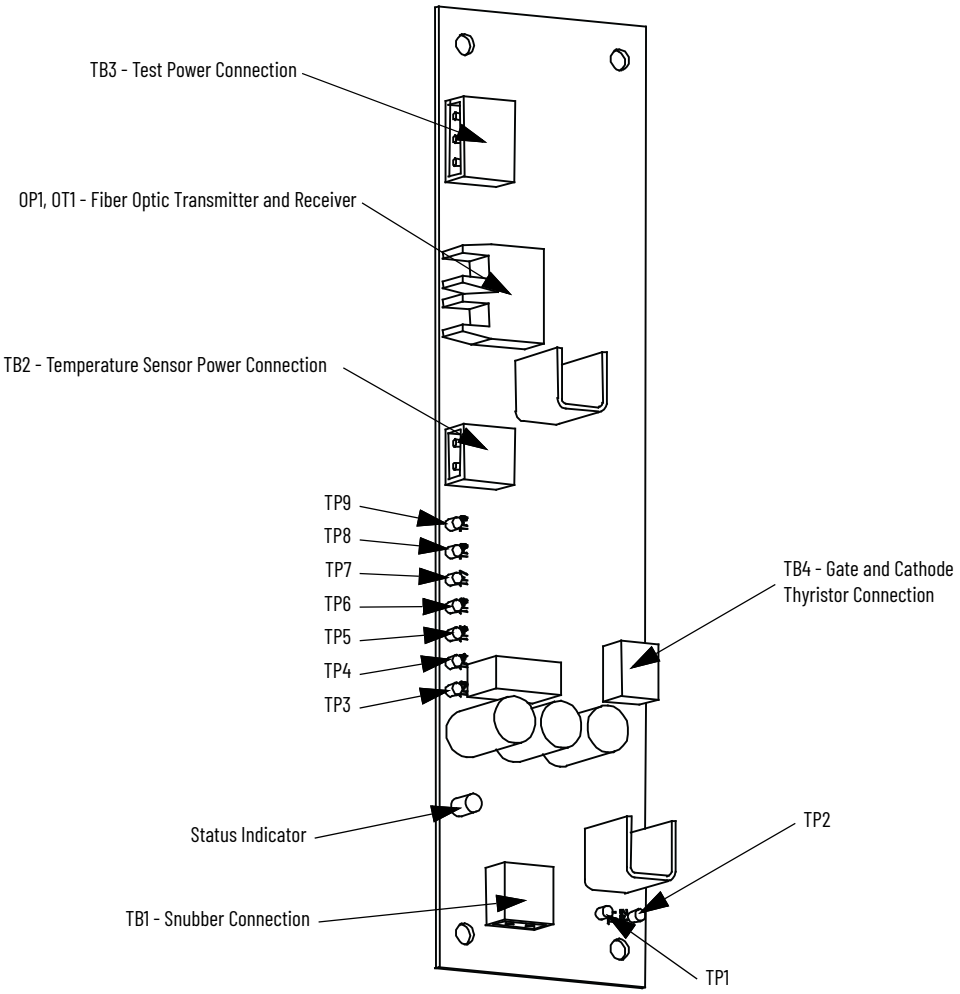

Terminal/Connections Description

TB1-1 – Connection to SCR snubber circuit used to extract energy from the snubber for SPGDB operation

TB1-2 – Connection to SCR sensing resistor which indicates conduction status of SCR being operated

TB2-1 – Positive 20V power supply connection to temperature sensor board. Provides power to temperature sensor board.

TB2-2 – Common connection of positive 20V power supply to temperature sensor board

TB3-1 – Positive 15V power supply connection for test power used when commissioning drive or testing SPGDB

TB3-2 – Provides artificial sense voltage signal to allow SPGDB to gate the SCR when in test mode. When the appropriate test power cable is used, P/N 81001-262-51, this input is shorted to TB3-1 to obtain the sense voltage.

TB3-3 – Common connection of positive 15V power supply used for test power

TB4-2 – Cathode connection to SCR being controlled

TB4-1 – Gate connection to SCR being controlled

OP1 – Blue fiber optic cable receptacle – Firing pulse command from the processor

OT1 – Grey fiber optic cable receptacle – Diagnostic status of the SCR

Testing procedure for SCR Self-powered Gate Driver Board

Required Equipment:

- Digital oscilloscope
- Function generator w/duty cycle control
- DC power supply (+15V @ 300 mA required)
- Digital multimeter
- Temperature sensor board (80190-639-02)

Procedure:

1. Connect a clamped ABB #5STP03D6500 SCR to the gate-cathode leads of the SPGDB board (TB4-1/TB4-2).
2. Attach a temperature sensor board to the TB2-1/TB2-2 terminals.
3. Apply +15V test power to terminals TB3-1 and TB3-3 (TB3-1 is at +15V while TB3-3 is the +15V return). Leave TB3-2 open.
4. Measure TP4 to TP3, which should be +14.4V, ±100 mV.
5. Measure TP5 to TP3, which should be +5.0V, ±250 mV.
6. Measure TB2-1 to TB2-2, which should be +14.4V, ±100 mV.
7. Measure the voltage at U4-pin2 to COM, which should be +1.0V, ±100mV.
8. Measure the voltage at U4-pin3 to COM, which should be 0V.
9. Measure the voltage at U4-pin7 to COM, which should be +3.6V, ±100 mV.
10. Verify that the OT1 LED is off.
11. Measure TP7 to TP3, which should be 0V.
12. Measure TP9 to TP3, which should be +5.0V, ± 250 mV.
13. Measure TP8 to TP3, which should be 0V.
14. Measure TP1 to TP2, which should be 0V.
15. Connect a jumper between TB3-1 and TB3-2 and verify that the voltage at TP6 is +2.2V, ±100 mV.
16. Apply a 60Hz, 33% duty cycle signal to the OP1 fiber optic input.
17. Verify that the diagnostics transmitter LED, OT1, is on.
18. Verify that the signals at TP9 and TP8 are as shown in Figure 110.
19. Verify that the signal between TP1 and TP2 is as shown in Figure 111 and Figure 112.
20. Remove the jumper between TB3-1 and TB3-2.
21. Apply a constant fiber optic signal to the OP1 input.
22. Apply a 60 Hz, 33% duty cycle signal, at a 0 to +2V level, between the TB1-2 input and COM. Verify the signals in Figure 113 and Figure 114. Note that in Figure 114 there should be a 220 µS, ±20 µS time between the rising edge of the U4-pin7 pulse and the falling edge of the TP7 signal.

Figure 110 - Gating Pulses

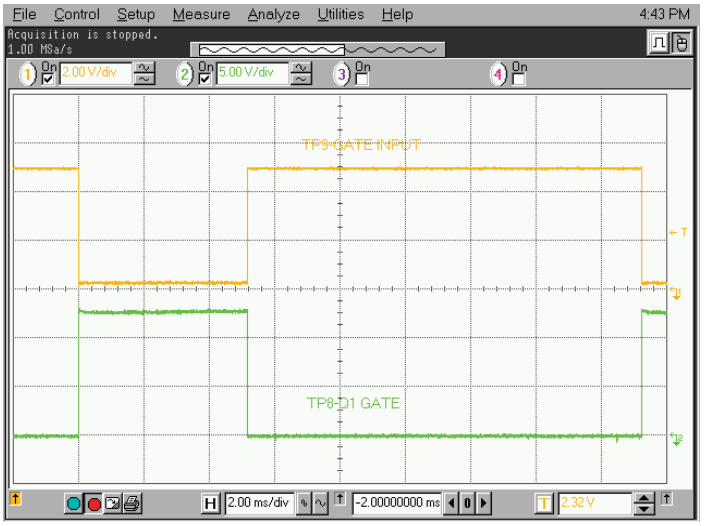

Figure 111 - SCR Gating Pulse

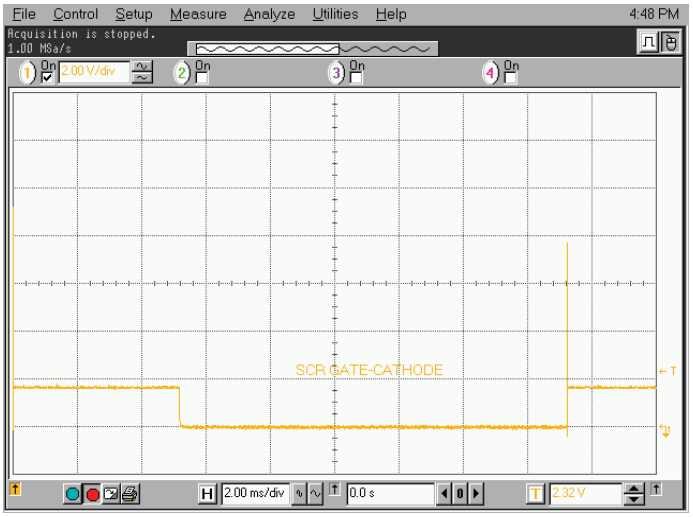

Figure 112 - Expanded SCR Gating Pulse

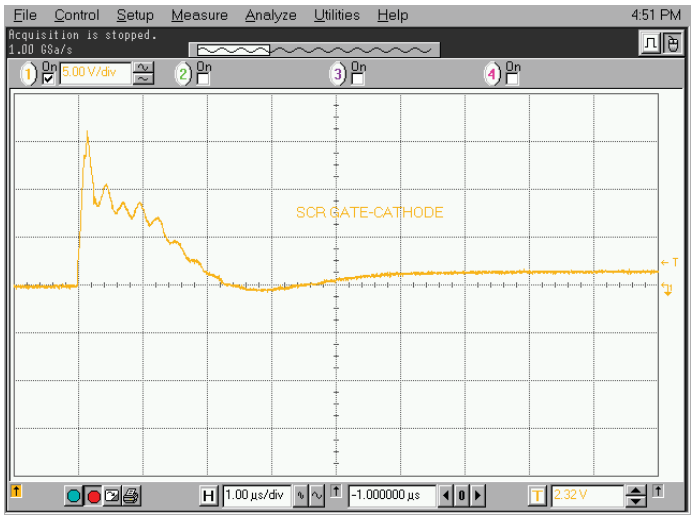

Figure 113 - V Sense Trigger to SCR gating pulse

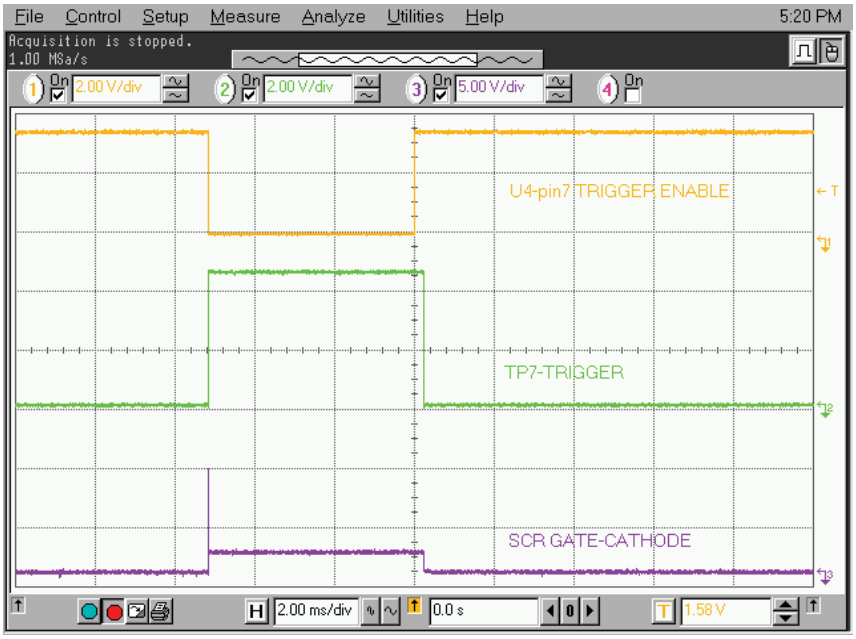

Figure 114 - Expansion of V Sense Trigger to SCR gating pulse

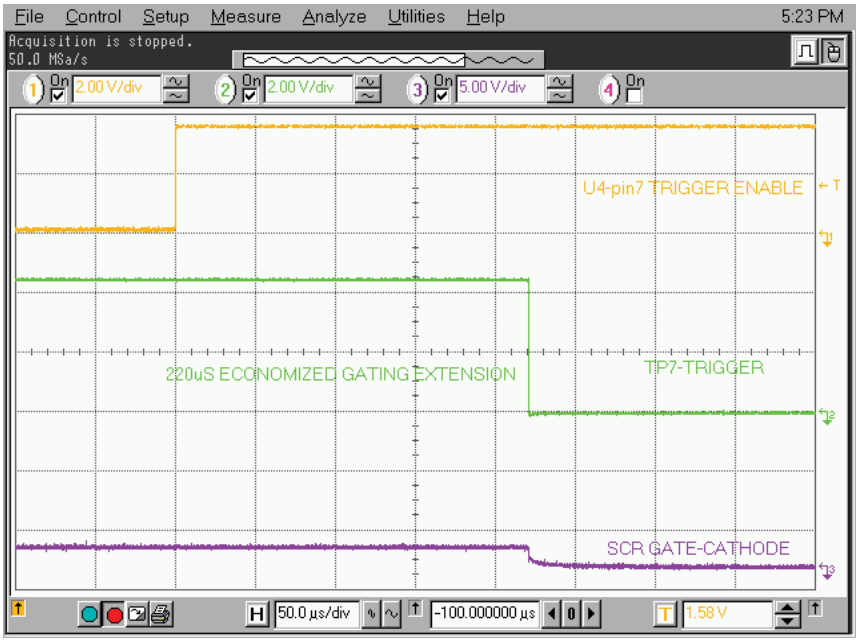

Fiber Optic Cabling

The equipment is provided with fiber optic cabling as a means of interfacing the low voltage control to the medium voltage circuits. The user of the equipment should never need to change the routing of the fiber optic cables.

Each end of a fiber optic cable is provided with a connector that plugs and latches into its respective location on a circuit board. To disconnect a fiber optic cable, depress the ridged plastic tab at the end connector and pull. To install a fiber optic cable insert the fiber optic port of the circuit board so that the plastic tab latches into place.

If the user finds it necessary to replace fiber optic cables, great care must be taken to prevent the cables from becoming strained or crimped as a resulting loss in light transmission will result in loss in performance.

The minimum bend radius permitted for the fiber optic cables is 50 mm (2.0 in.).

When installing the fiber optic cable, the color of the connector at the end of the cable must match the color of the connector socket on the circuit board.

Lengths of fiber optic cables used are shown in Table 7.

Table 7 - Fiber Optic Cable Length

Duplex (m)	Simplex (m)
5.0	5.0
5.5	6.0
6.0	10.0
6.5	–
7.0	–

There is one duplex fiber optic for each thyristor, which manages gating and diagnostic functions. The healthy status of the thyristor is determined by the circuitry on the respective driver boards. This information is then sent to the main processor via a fail-safe light signal in the fiber optic. The firing command for the thyristor is initiated by the main processor and transmitted to the appropriate gate driver board via the gating fiber optic.

The color codes of the connectors are:

- BLACK or GREY – is the transmitting end of the fiber optic.
- BLUE – is the receiving end of the fiber optic.

Figure 115 - Common Mode Choke and Control Power Cabinet

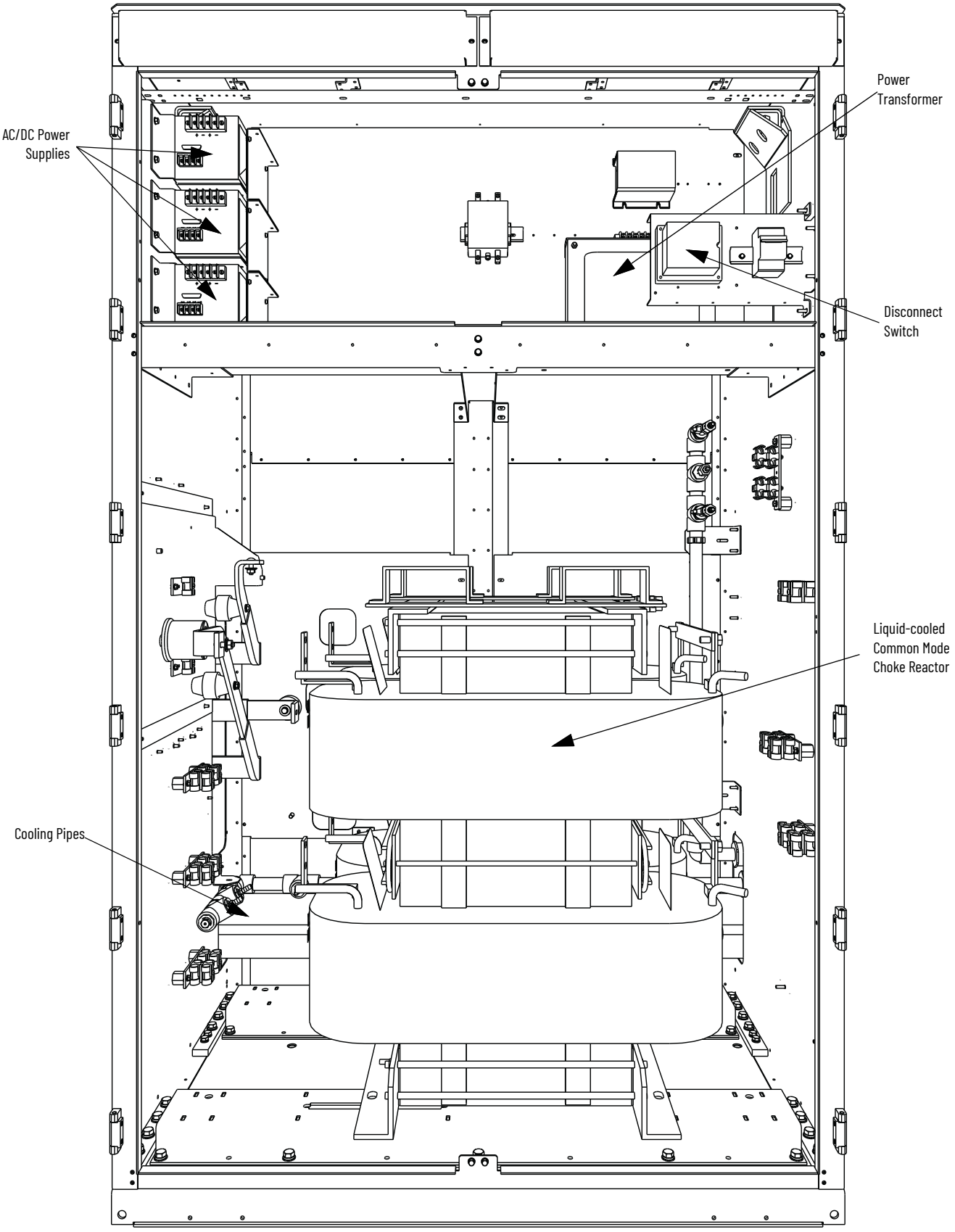
Power
Transformer
AC/DC Power
Supplies
Disconnect
Switch
Liquid-cooled
Common Mode
Choke Reactor
Cooling Pipes

The door of the Control Power Panel is interlocked so that it cannot be opened unless the 3-phase control power is disconnected. When the door is opened, the AC Control Power transformer and the AC/DC power supplies are accessible. This is the section where the customer 3-phase power is brought into the drive.

The DC Link is mounted on the floor beneath the control power section. The larger door is interlocked with the rest of the system and cannot be opened unless the MV power is locked-out. The DC Link is part of the cooling circuit for the PowerFlex 7000L "C" frame drive, and has two inlets and two outlets for coolant flow.

Power Connections are made to the DC Link through flexible leads, and they are labeled L+, L-, M+, and M-. There is a Hall Effect current sensor on the M+ connection to the DC Link.

DC Link Reactor

The DC Link maintains a ripple-free current between the rectifier and the inverter. Thermal levels in the DC Link are achieved through cooling water.

The DC Link Reactor does not normally require service. To replace the DC Link, refer to Figure 116 and complete the following steps.

1. Ensure the MV source power to the drive is locked out.
2. Drain the coolant from the drive system.
3. Lock out the control power.
4. Access the DC Link cabinet and remove the cooling connections to the DC Link.
5. Disconnect the 4 power connections to the DC Link. Remember to note the location for each of the cables on the DC Link.
6. Remove the hardware that secures the DC Link to the ground channels.
7. Remove the DC Link frame ground connection.
8. Using a lift truck, remove the DC Link from the cabinet.
9. Install the replacement in the reverse order.

Figure 116 - DC Link Reactor

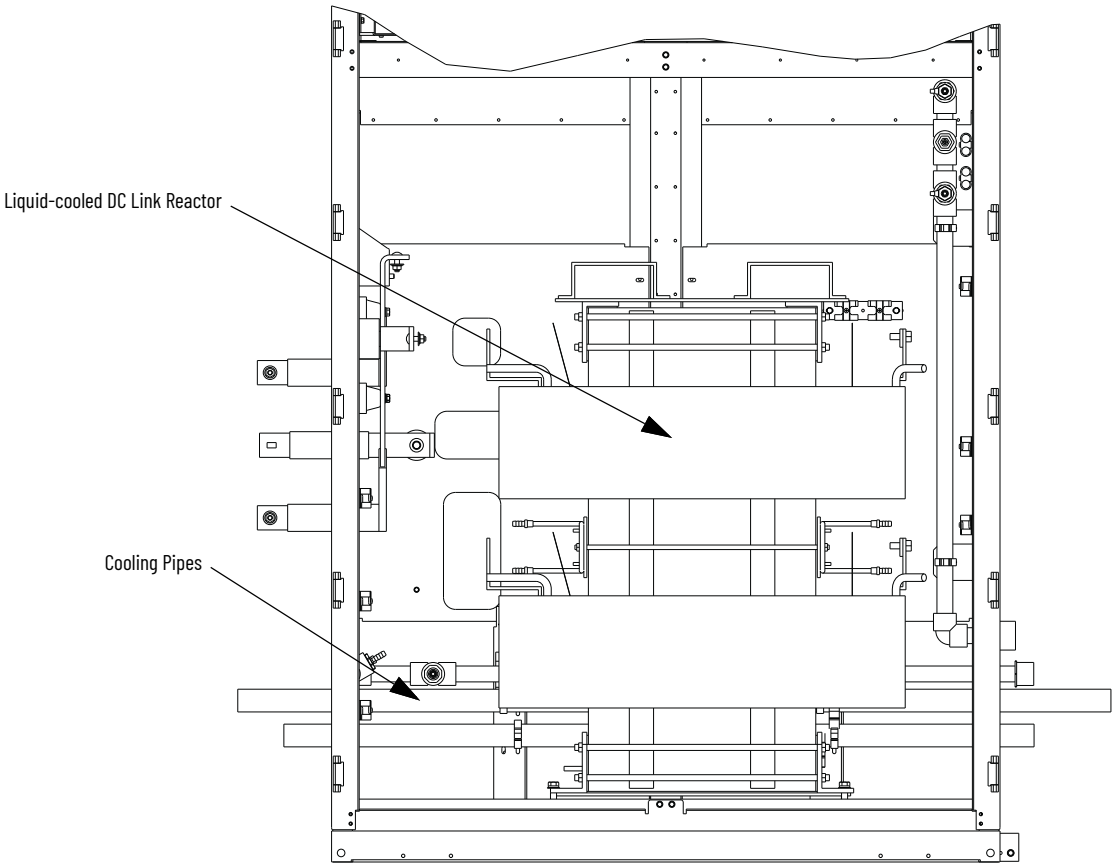

The installer needs to verify that the DC Link power connectors go to the proper locations. Route the power connectors the same way so the electrical clearances are not compromised.

The nameplate data must be compared to the old DC Link to ensure that the ratings are appropriate for the drive system. Any changes in the nameplate should be noted since the parameters within the drive will need to be changed.

Cooling System

Figure 117 - Generic Cooling System Overview

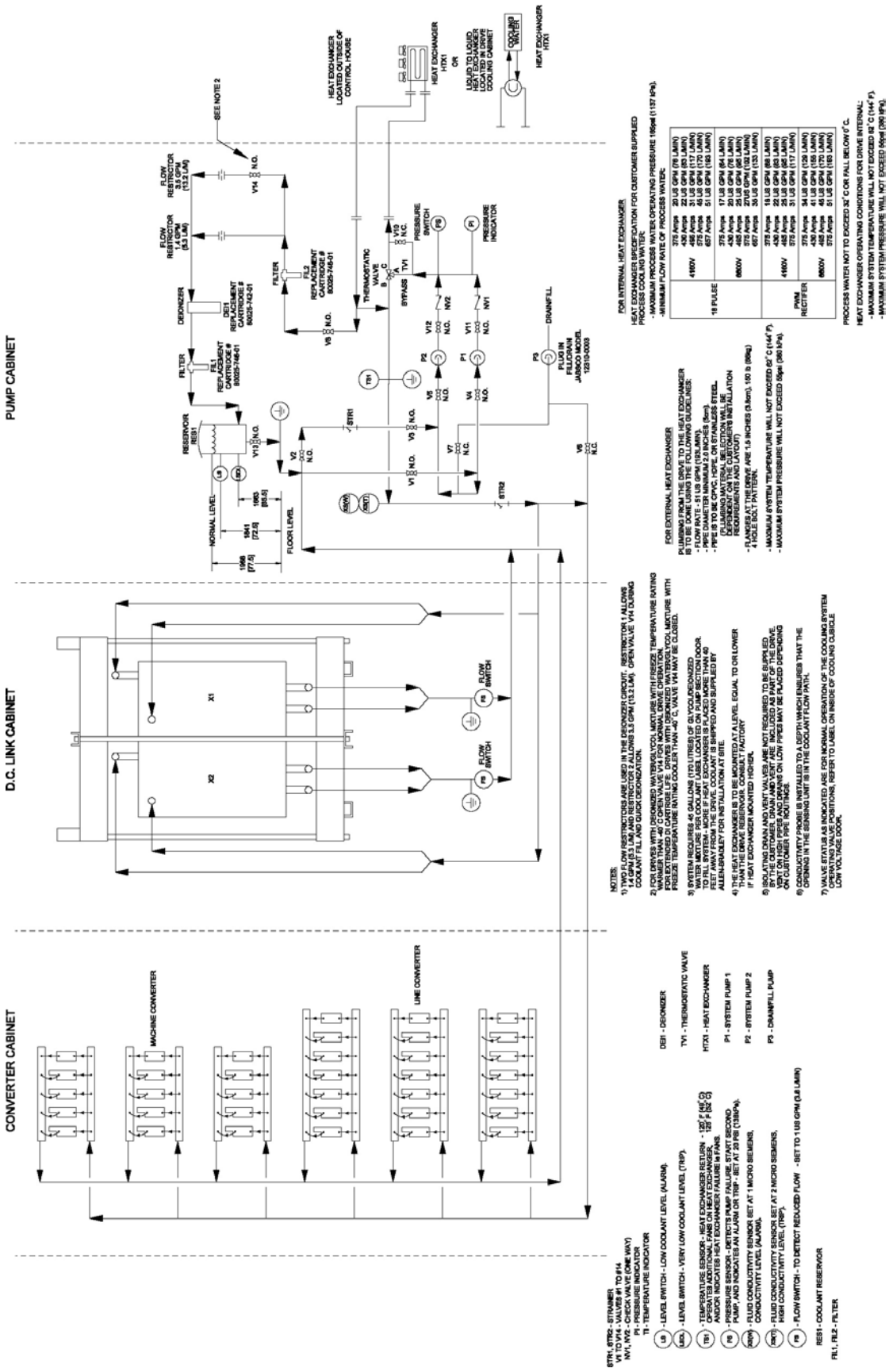

Cooling Circuit

This circuit is required to cool such devices as silicon-controlled rectifier (SCR), symmetrical gate-commutated thyristor (SGCT), snubber resistors, and sharing resistors. The SCRs and SGCTs are positioned between two chill blocks in an alternating fashion to create a horizontal stack. The sharing and snubber resistors are mounted on a plate with cooling tubes embedded within. As cool liquid flows through the cooling tubes the entire plate is cooled, which in turn cools the resistors.

Chill Blocks

Chill blocks (Figure 102) are constructed of highly conductive copper machined parts that are silver soldered together. The parts are machined to a fine surface finish. The copper chill block provides good heat transfer from the electrical device to the chill block. The coolant system is connected to each chill block with flexible 10 mm (3/8 in.) hose which fits onto stainless steel hose barbs which are part of the chill block assembly.

Coolant Pumps

Two pumps (P1 and P2) are used to move coolant through the system (Figure 118). One of the pumps is used as a backup. The control logic alternates the primary and secondary pump to verify equal time of operation. The pumps must not run dry, as this damages the seals. The pumps must not be excessively noisy (pumping air pockets) when filling the system.

Pump Maintenance and Replacement

Pump Maintenance Guidelines

ATTENTION: Do not run the pumps without coolant. Coolant must be present in the system. Damage to the pump seals may result.

When the motor is at a standstill for long periods of time, the elastomers, bearings, and mechanical seal can start to degrade or bind. To avoid this issue, turn the motor fan every month, which separates the mechanical seal faces and keeps the motor bearings lubricated.

If the pump is in service, grease the bearings on the motor side every 10,000 hours. Apply approximately 4 grams or 4 shots of Mobil Polyrex EM lubricant.

As a general guideline, the pump side requires a seal replacement every 24...30 months, regardless of whether it is leaking or not. See the pump nameplate for manufacturer's model information. Typical pump seal replacement information is provided on the manufacturer website.

Figure 118 - Pump Cabinet

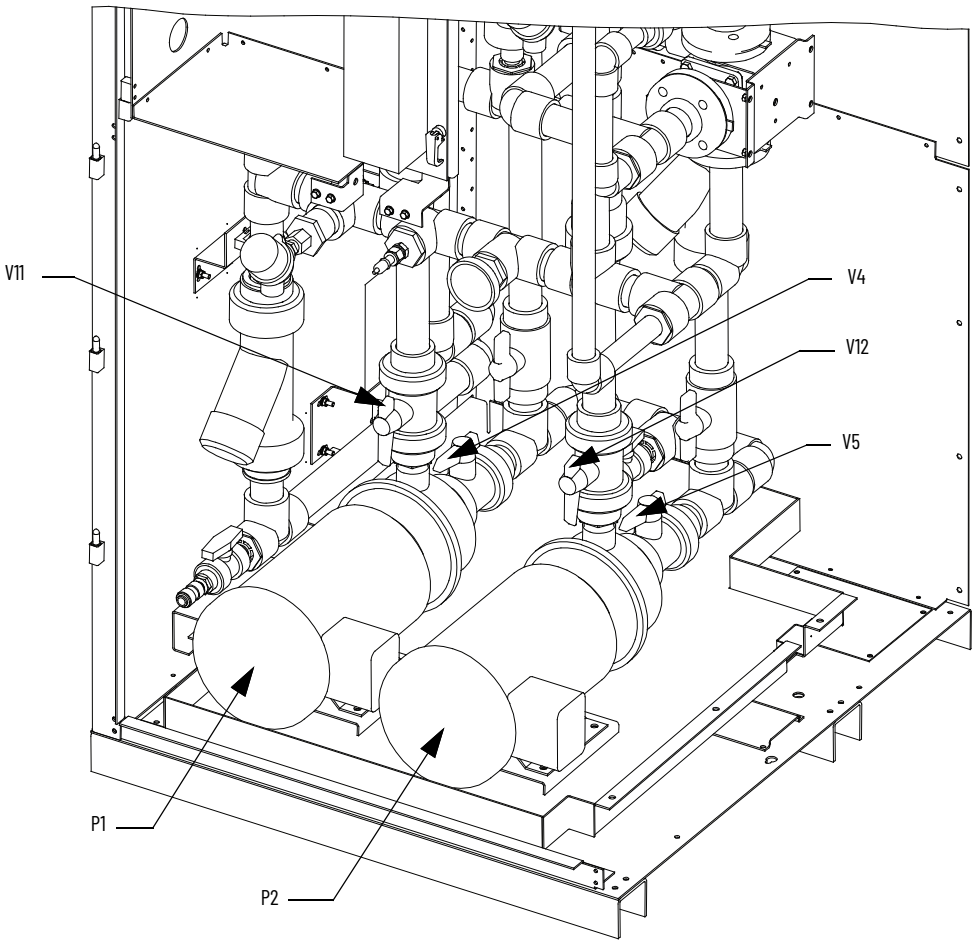

Figure 119 - Pump Cabinet with Ebara Pumps

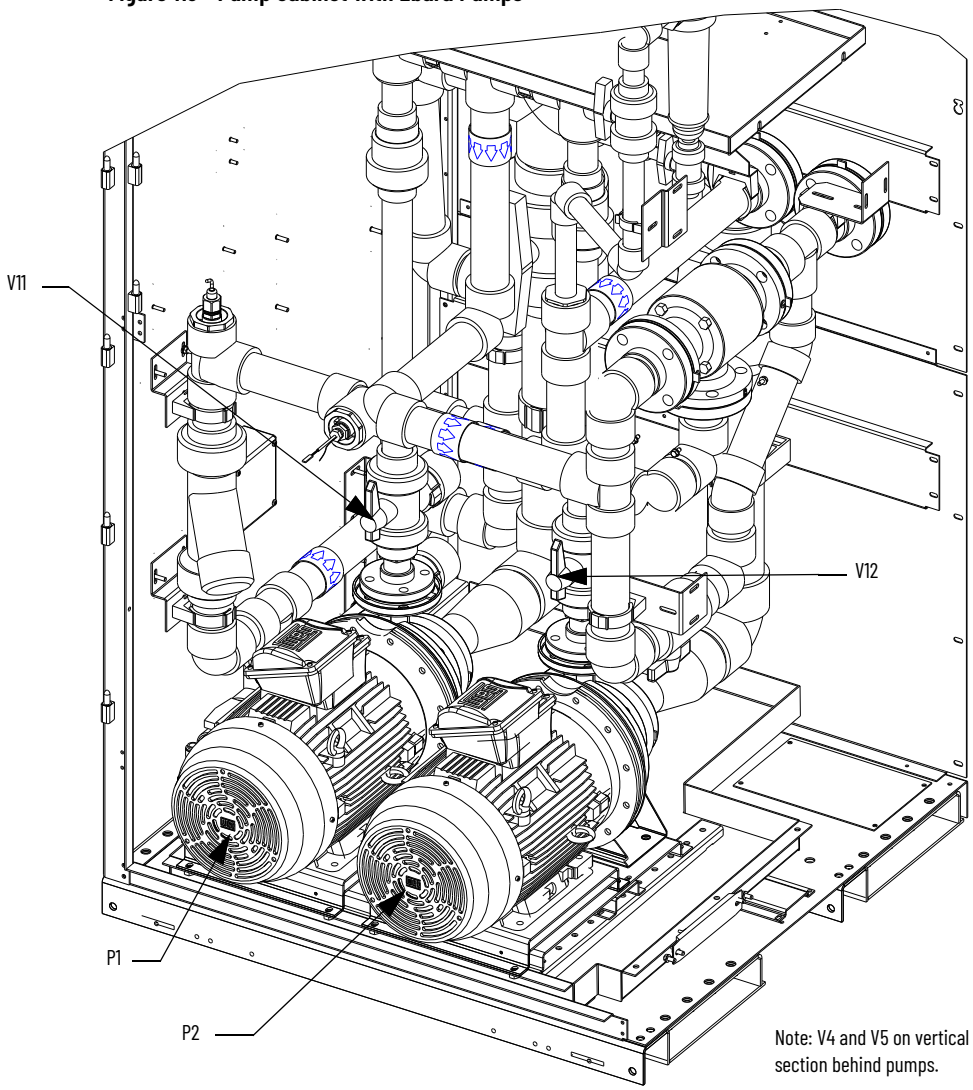

Pump Replacement with Drive Running

During drive operation, one of the pumps must be running. Two pumps run alternately switching from one pump to another after a preset time. This switching time is dependent on the Control Program setup. A pump can be replaced during drive operation by following the instruction sheet 'PowerFlex 7000 Liquid-cooled System Operation' attached to the inside of the pump cabinet door.

Pump Removal

1. Set the pump selector switch that is on the pump cabinet door to the pump that must run to cool the drive.
2. Open V1 (if provided).
3. Close V4 and V11 if removing pump P1 or close V5 and V12 if removing pump P2.
4. Isolate power to the pump motor to verify that there is no voltage at pump motor leads.
5. Check voltages at terminal T1, T2, and T3 at pump to verify that there is no voltage.
6. Disconnect wires T1, T2, and T3 at pump.

7. Loosen true union connectors or flanges to disconnect pump from piping.
8. Unbolt pump from the foot plate and remove.
9. Repair pump as per manufacturers repair procedure supplied with the drive.

Pump Installation

1. Isolate power to pump motor wires by verifying that there is no voltage at the pump motor leads.
2. Install pump and reattach wires to motor.
3. Open V1 (if provided).
4. Open V4 for pump P1 or V5 for pump P2.
5. To prime pump, carefully unscrew vent plug on top of pump casing. Close vent plus when coolant is seen.
6. Open V11 for Pump P1 or V12 for Pump P2.
7. Clear warnings in drive.
8. Jog pump by manually closing repaired pump contactor for 1 second. Confirm the direction is clockwise when viewed from motor side of pump. Isolate power to motor and interchange two motor leads to reverse motor direction.
9. Operate pump for 5 seconds. Verify that the pressure gauge shows an increase of pressure with two pumps operating.
10. Place pump selector switch to Auto.

Piping, Tubing, and Connectors

The piping is schedule 80 made from chlorinated polyvinyl chloride (CPVC) which has good high and low temperature properties and is unaffected by deionized water or ethylene glycol. The main piping is either 38 mm (1.5 in.) or 50 mm (2.0 in.) diameter.

The coolant hose connecting chill blocks to manifolds and common mode chokes or DC links to piping is made of 10 mm (3/8 in.) EPDM. The hose is pushed onto hose barbs of stainless steel or CPVC. Hose clamps are used at the hose barbs.

Non-Return Valves

The non-return valves (NV1 & NV2) shown in Figure 120 are ball-type valves made from CPVC. These valves cannot be changed with the drive on-line. All coolant must be drained to replace these parts.

Figure 120 - Pressure Indicator and Switch Locations

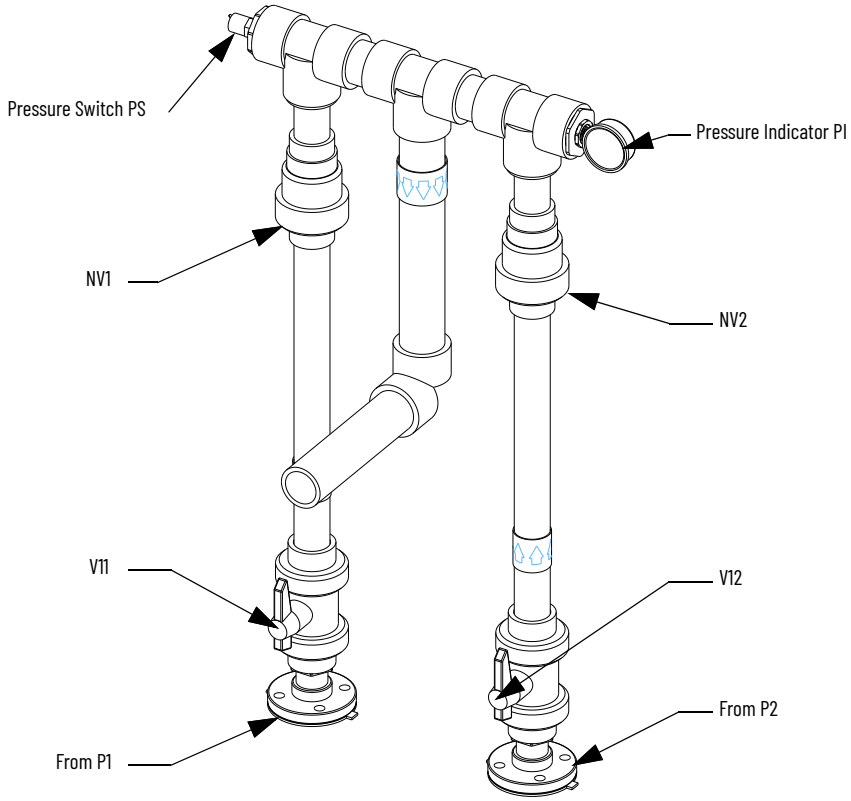

Pressure Indicator

The pressure indicator (PI) shown in Figure 120 indicates the discharge pressure of the pumps. See the piping diagram supplied for the expected pressure value. Diagram is pasted in the pump cabinet.

Pressure Switch

The pressure switch (PS) shown in Figure 120 detects the drop in pressure if a pump fails or if there is a major pipe break. When low pressure is detected, the backup pump starts, but if the pressure does not reach operating levels within a set time, the drive shuts down.

Thermostatic Valve

The thermostatic valve (TV1) is similar to an automobile thermostat. When the fluid is cool, the valve bypasses the flow away from the heat exchanger to recirculate within the drive. As the fluid increases in temperature, the valve gradually opens, letting a trickle of fluid flow through the heat exchanger. The thermostatic element is set to begin opening at 29 °C (85 °F) and is fully open at 38 °C (100 °F). All flow then travels to the heat exchanger. The thermostatic valve keeps the semiconductor devices from getting too cold, and it keeps the near room temperature to help prevent condensation.

Thermostatic Valve Replacement

The drive must be shut down while replacing the thermostatic valve.

1. Open valve 10 and drain all coolant before replacing the thermostatic valve.
2. Note three flanges A, B, and C on thermostatic valve. If you cannot see the marks A, B, and C on thermostatic valve, you can mark three flanges. This is important to put the thermostatic valve in correct position. The mark C flange is in upper direction, and mark B flange is in the bottom direction.
3. First unbolt flange A and B. Unbolt flange C, which is in upper direction, at the end.

Figure 121 - Thermostatic Valve Replacement

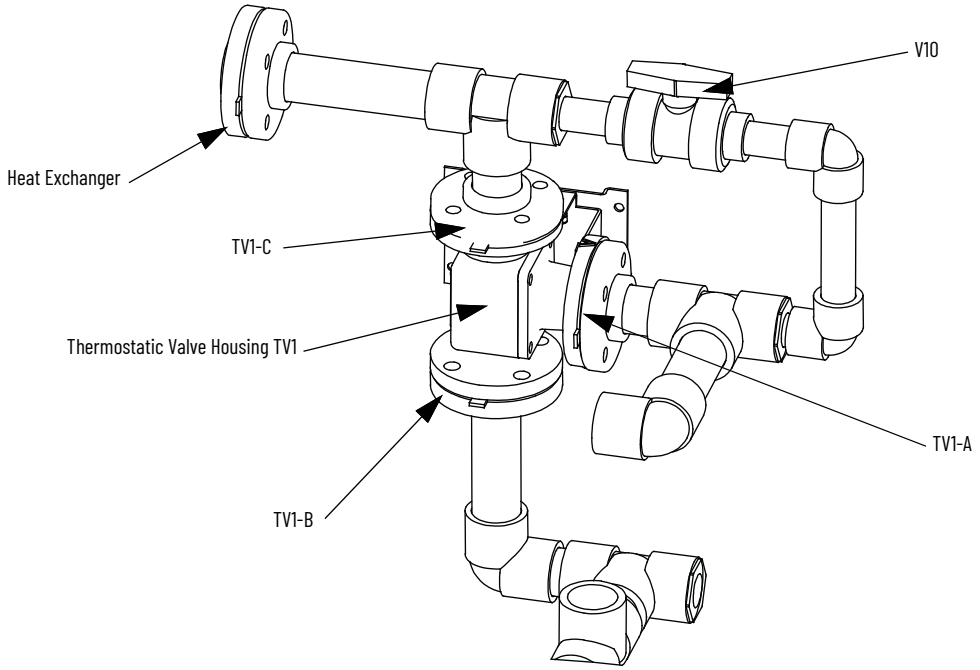

Repair Instructions - Element Testing

Place element in water at a temperature 8 °C...1 °C (15 °F...2 °F) above its nominal setting and stir water vigorously with the element for 5 minutes. The temperature that is stamped on the side of the element is not the nominal temperature; it is the temperature at which the element is set to open. The stamped temperature is usually 6...8 °C (10...15 °F) higher than the nominal. After stirring vigorously, immediately place the element in the housing. If the element is fully stroked, the seating and over-travel spring can be felt as it is pushed down. To determine if the element closes at a specific temperature, place the element in a bath of water approximately 3 °C (5 °F) below the start to open temperature. This is the number stamped on the element. Due to the effect of hysteresis, the element closes 3 °C (5 °F) below the start to open temperature.

Element Replacing

See Figure 122.

1. Remove four cap screws, lock-washers, and separate upper housing and lower housing.
2. Remove element assembly and seal.
3. Remove housing gasket. Clean housing sections and remove any scale or foreign material from seal faces.
4. Lubricate the new element seal and slide it in place over top of the element assembly into position shown in section view.
5. Place new housing gasket in recess of upper housing.
6. Insert element into upper housing to position shown in section view.
7. Place lower housing over exposed section of element against face of upper housing.
8. Secure housings with cap screws and lock-washers.

Figure 122 - Element Assembly Cross-Section

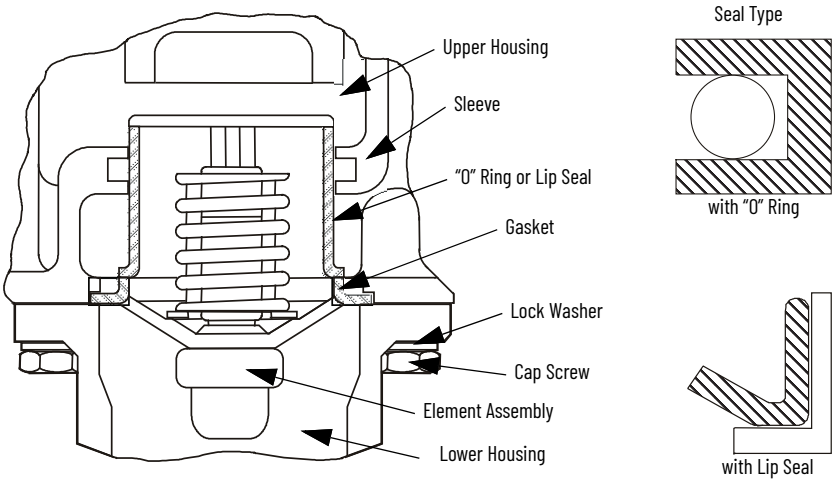

Heat Exchanger

The PowerFlex "C" frame drive requires a heat exchanger to transfer heat from the drive coolant to an external medium. There must be connections from the drive pumping cabinet to the heat exchanger. Confirm that these connections are completed and attached to the proper locations (inlet / outlet) on both the drive and the heat exchanger.

These connections must be made from stainless steel.

Do not use lead solder with the connections, as the coolant will deteriorate this connection over time.

When making connections to the drive from the heat exchanger, ideally the connections or the heat exchanger should not be at an elevation higher than the internal drive piping (below inlet of reservoir). This allows the drive to remove any trapped air in the system. If the heat exchanger is at a higher elevation, then air release valves should be installed at the highest point.

The largest heat exchanger is 287 cm (113 in.) tall.

The heat exchanger (HTX1) is normally a liquid-to-air unit made of copper tubing and copper headers. There are primary and secondary fans to cool the unit. The fans are controlled by temperature sensor TS1 (shown in Figure 125). A stainless steel liquid-to-liquid plate type exchanger is also available.

If the cooling temperature is less than 32 °C (90 °F), the fans will not run. The primary fan will start when the temperature reaches 38 °C (100 °F). The secondary fan will start when the temperature reaches 44 °C (110 °F).

Figure 123 - Typical Liquid-to-Air Heat Exchanger

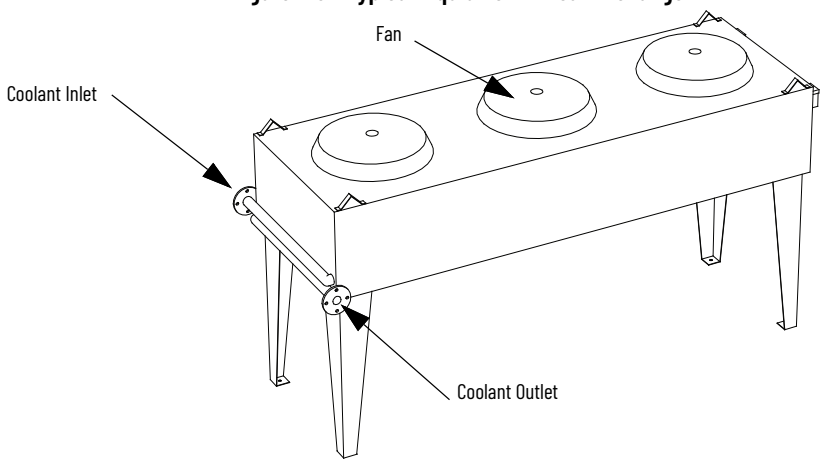

The tubing to the heat exchanger should have been cleaned by the installation personnel. If they are still in the process of installation, verify that the piping will be cleaned. Otherwise, the filling process can produce a lot of debris in the first mesh filter and may require several cleanings.

On a liquid-to-air heat exchanger, there will be fans on the heat exchanger to move the air over the cooling tubes within the exchanger. These fans must be wired per the electrical print.

Figure 124 - Heat Exchanger Inlet and Outlet Locations

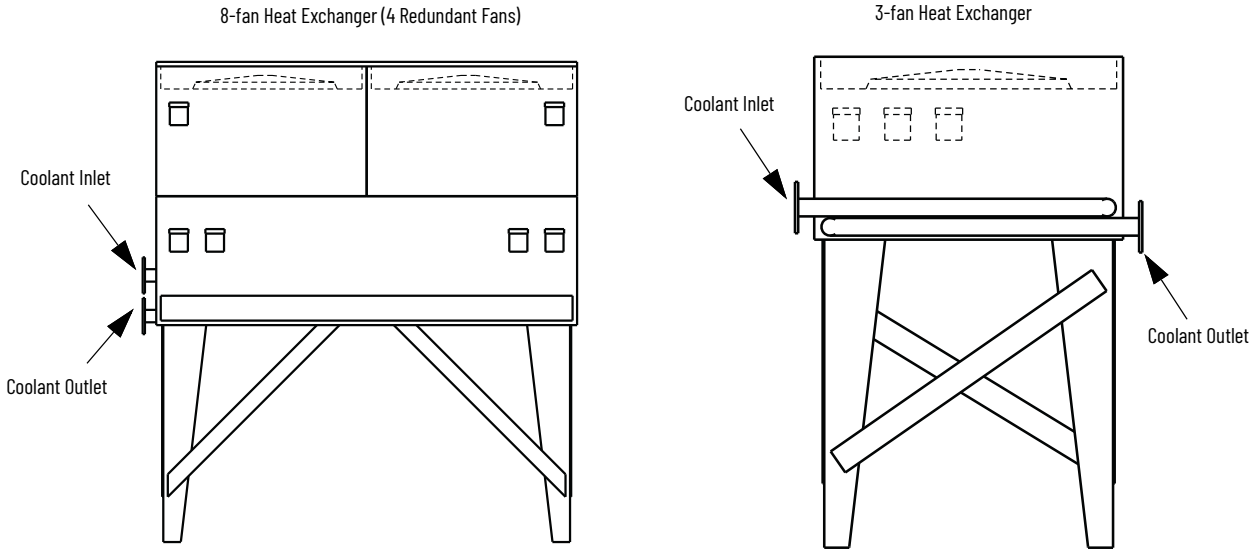

On a liquid-to-liquid heat exchanger, process water will be required to transfer heat from the drive coolant. The water temperature, pressure and flow rate are as specified by the factory on the piping schematic drawing mounted inside the pump cabinet.

Pumping Cabinet Control Power Checks

There will be 3 phase power brought into the control power cabinet and jumpered to the pumping control cabinet. This determines the direction of rotation of the pumps. There are arrows on the pump showing the proper direction of rotation, and it can be visually verified by looking at the non-drive end shaft. Manually activate the pump control relays and verify the rotation.

Manually activate the fan control relays and ensure each of the fans on the heat exchanger is rotating. The fans must be wired to the correct relays (as specified by factory).

Fluid Conductivity

An in-line conductivity sensor (XS) (Figure 125) measures the fluid conductivity. The sensor sends a signal to a meter mounted on the pump cabinet door. Two conductivity switches are part of the meter. They are set at conductivity of 1 µS/cm for the annunciation warning and 2 µS/cm for the trip value.

Change the deionization cartridge when the conductivity rises to the warning level.

Figure 125 - Temperature and Conductivity Sensors

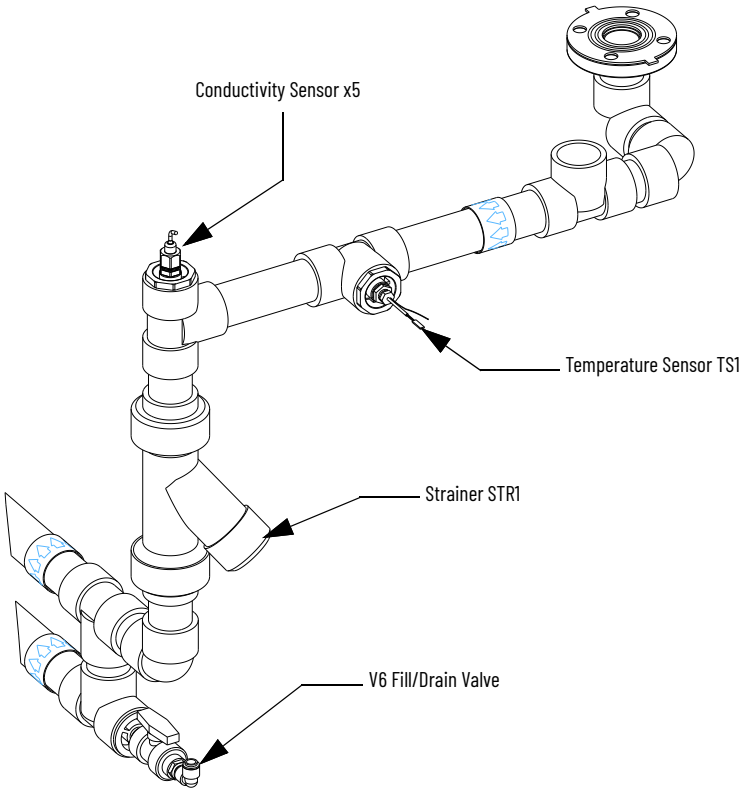

Temperature Sensor

This temperature sensor (TS1), shown in Figure 125, triggers the drive to shut down when the fluid temperature entering the converter cabinet is too high. This situation could occur if the air cooling of the heat exchanger is cut off due to fan failure, plugging of the air paths, or failure of the thermostatic valve.

The following are the temperature values for alarm and trip signal:

1. When coolant temperature is greater than 48 °C (120 °F), an alarm signal is initiated. It can only be reset when temperature reaches 38 °C (100 °F).
2. When coolant temperature is greater than 62 °C (144 °F), a trip signal is initiated. It can only be reset when the temperature reaches 48 °C (120 °F).
3. When coolant temperature is less than 4 °C (40 °F), a trip signal is initiated. It can only be reset when the temperature reaches 10 °C (50 °F).

De-ionizing Cartridge and Mesh Filter

The flow circuits shown in Figure 126 filters and de-ionizes coolant at a rate of about 19 L/min (5 gpm). Valve V14 may be closed only if the coolant mixture in the drive has a freeze temperature colder than -40 °C (-40 °F). This allows a decreased flow to 5.3 L/min (1.4 gpm).

This stream can be isolated for cleaning and maintenance by closing the incoming valve V8. The filter is a 500-micron fine-mesh type, which can be cleaned many times by rinsing in clean water. The de-ionizing cartridge is a mixed-bed cartridge type, which can be disassembled easily for de-ionizing cartridge replacement.

Figure 126 - Deionizer Reservoir Circuit

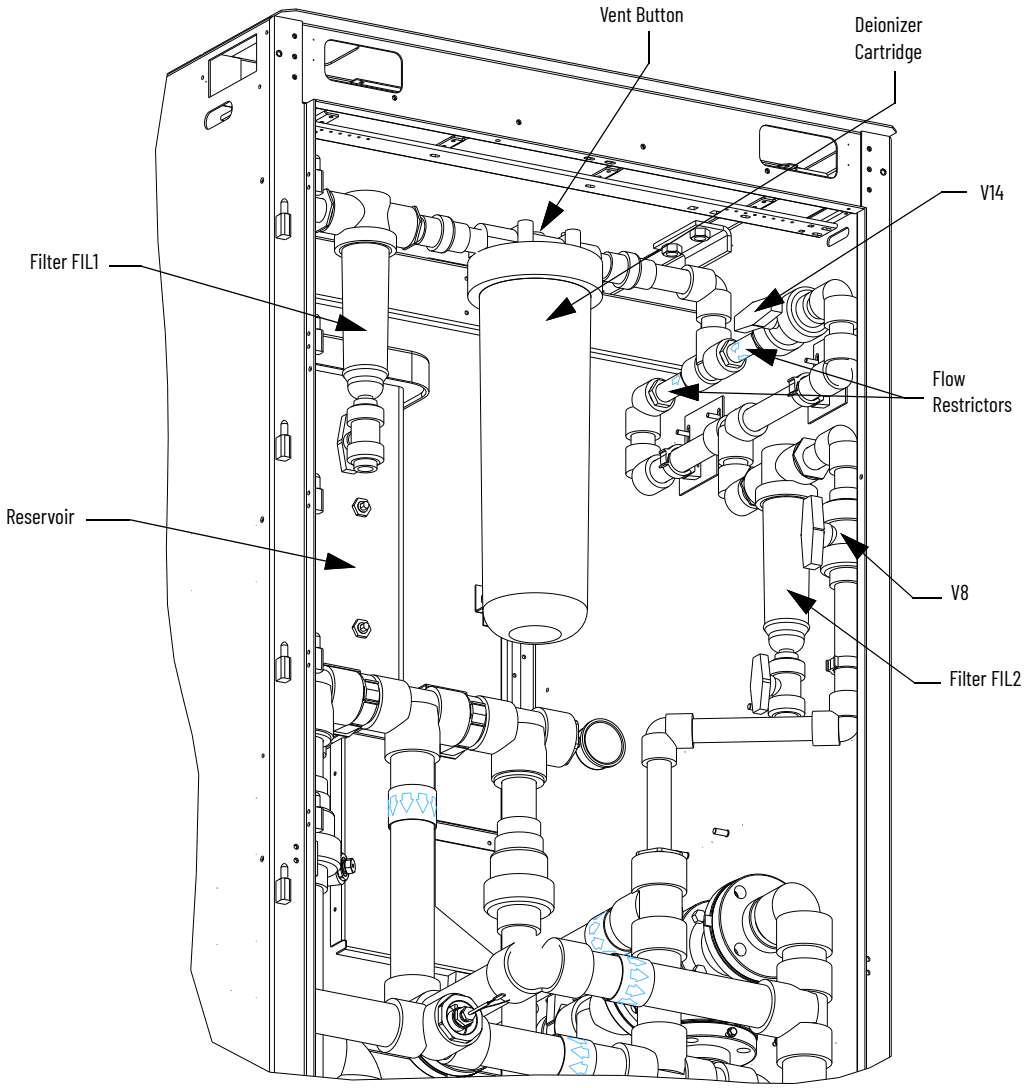

Figure 127 - Reservoir Circuit

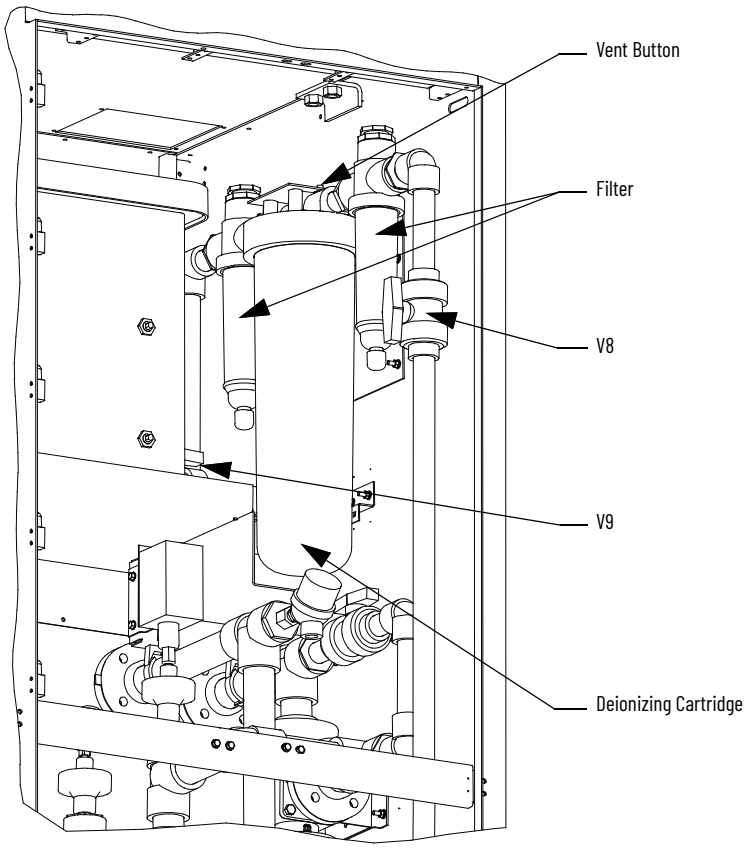

Addressing High Coolant Conductivity

When the conductivity of the coolant approaches the alarm level of 1.0 µS, a conductivity alarm and/or fault occurs. To correct the problem, clean the fine mesh filters (see Figure 126) and put the purification system back online. Check the filters periodically and replaced when worn out. If the conductivity does not decrease after cleaning the filters, replace the deionization cartridge. If the filters are clogged, coolant conductivity will increase even if the deionization cartridge is still functioning properly. The filters and the deionization cartridge can be changed while the drive is running.

1. Close valves V8 and V9 (if provided) and unscrew the housing (see Figure 127).
2. Drain some of the coolant by loosening the drain at the base of the filter. Some spillage may occur so a pail should be placed underneath.
3. The filter may be cleaned or replaced, however the de-ionizing cartridge must be discarded and replaced with a new one.

ATTENTION: Do not recycle the resin cartridge. It has been contaminated with ethylene glycol.

4. Add one 4 L jug of concentrated ethylene glycol with corrosion inhibitor (Rockwell Automation PN 80026-739-01) to the reservoir. If the coolant level is high in the reservoir, drain some coolant from the reservoir before adding the ethylene glycol. Use the small transfer pump with tubing that is mounted on the right side of the pump cabinet to add or remove the coolant.
5. Open valves V8 and V9 (if provided) after cleaning. The high conductivity warning will stop once the conductivity decreases to its normal level.

Reservoir Circuit

The reservoir is a cross-linked, polyethylene 57 L (15 gal) container. Level switch LS (see Figure 126) is a warning switch that annunciates when the fluid drops down below the first level switch.

Level switch LSDL (see Figure 126) triggers the drive and cooling pumps to shut down when the fluid drops below critical level.

Fluid Top-up

Keep the coolant at the proper level in the reservoir. There are two float switches within the reservoir: one indicates a low coolant level (LS-alarm) and requires a top-up of the fluid, and the other indicates a very low coolant level (LSDL-trip) and triggers a shut down of the drive. Deionized water and chloride-free ethylene glycol or a mixture of the two may be added to the reservoir. Use the 200 L (55 gal) barrel to mix coolant and/or to premix the deionized water and glycol. Check the freeze protection concentration with a glycol tester and add fluid accordingly. Add coolant using the provided transfer pump and tubing that is mounted on the right side of the pump cabinet.

IMPORTANT	If the drive is in operation, pour the coolant slowly so you do not disturb the level switches. This can cause a trip fault by jogging the transfer pump.

Strainers

Cleaning the Pump Suction Strainer (if provided)

1. Open valve V1, shown in Figure 128, to ensure flow to the pumps.
2. Close valve V2 and V3. Loosen strainer by hand. Clean it properly in water and dry it before putting it back.
3. Open V2 and V3 slowly to avoid a rush of air into the pumps. The air will gradually be purged from the system by flowing through the reservoir.
4. Close valve V1.

Figure 128 - Cleaning the Strainer

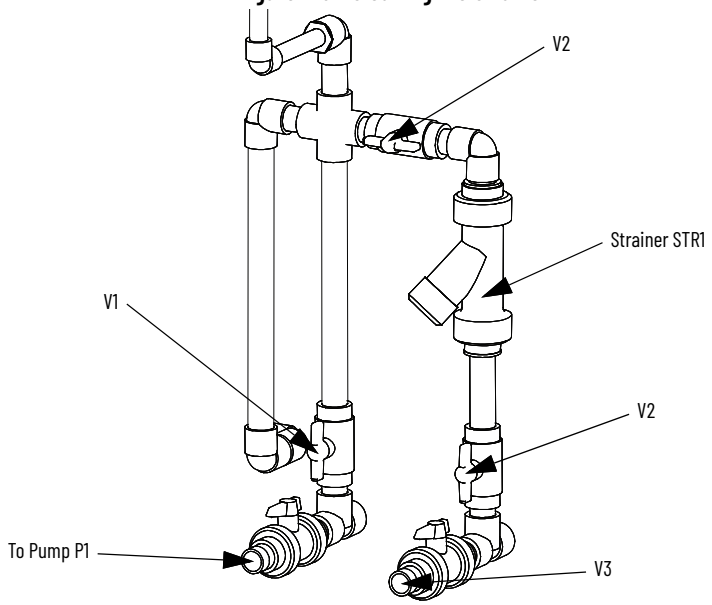

Coolant

The cooling fluid is a mixture of deionized water and ethylene glycol. Deionized water has been purified of most ionized solids and has very low conductivity. The ethylene glycol is an iron- and chloride-free type and also has low conductivity.

Water is an active solvent and gathers contaminants from everything it contacts. In nature, ionized solids such as Sodium (Na^{+}), Calcium (Ca^{+2}), and chloride (Cl^{-}) are stripped from rocks and soil by water. Also found in water are organic molecules from decaying debris, bacteria and microbes that normally grow in water, and dissolved ionized gases such as chlorine (Cl_2) and carbon dioxide (CO_2).

Conductivity is primarily the result of ionized solids and gases in water. The other materials in water contribute very little to electric current flow. When a voltage is impressed on water, current flows by using the ionic molecules as stepping stones for the current. Most bacteria and organic materials offer few stepping stones for current, so if the ionized solids and gases are removed, the water becomes relatively non-conductive.

Dissolved ionized solids and gases can be removed by using ion exchange resins. Such resins attract ions in the water replacing them with H^{+} and OH^{-} ions, which ultimately join to form water. Ion exchange resins are synthetic polymers with several ion exchange sites attached to the surface. The ion exchange resins gradually lose their effectiveness and need to be replaced or recharged.

Do not recycle the de-ionizing cartridge because it has been contaminated by ethylene glycol and would contaminate the recycling facility.

It is **imperative** that iron- and chloride-free ethylene glycol is used. The ethylene glycol coolant may contain an approved corrosion inhibitor that passivates metal surfaces that contact the coolant. In addition, deionized water may be added to the system for top up. Distilled water can only be used when no de-ionized water is available, and when it is necessary to run the drive on line. Using distilled water will significantly reduce the life of the ion exchange resin, and reduce the life of mesh filters.

Maintaining Coolant Ratio

Mixing pure ethylene glycol and deionized water produces the coolant used as the cooling medium in the liquid-cooled PowerFlex 7000L medium voltage “C” frame drive. During operation, the concentration of pure ethylene glycol and deionized water may change due to fluid leakage or evaporation; therefore, the freezing point of the coolant may not be correct. The following instruction detail the steps required to record and correct the freezing point of the coolant mixture.

Required items:

- Glycol and battery tester (Part No. 80025-862-01)
- Deionized water, 19 L (5 gal) container (Part No. 80025-784-60)
- Pure ethylene glycol, 19 L (5 gal) container (Part No. 80025-784-61)

1. Measure and record the reservoir coolant freeze point using the glycol and battery tester.
2. If the freezing point of the coolant is at -45 °C (-50 °F) ±2 °C, correction is not required.

3. If correction is required, then follow the remaining steps.
4. Water freezes at 0 °C (32 °F) and pure ethylene freezes at -13 °C (8.6 °F), but mixtures of the two freeze at lower temperatures. For example, a 50/50 mixture by weight of ethylene glycol and water freezes at -36 °C (-33 °F). The addition of ethylene glycol to the mixture will lower the freezing point. Adjust the freeze temperature of the coolant mixture to -45 °C (-50 °F) using this method.
5. Add either substance in small quantities and measure the freezing temperature after each addition until desired freezing temperature is achieved.

IMPORTANT It is better to have more water than glycol in the mixture because water is a better thermal conductor than glycol.

There are two possible causes of water loss in the drive:

Evaporation – Up to 99.5% of liquid lost to evaporation is water because of the chemical properties of the substances in the mixture.

Leaks – Glycol and water are lost proportionally depending on the concentration of the substances in the mixture. For example, if the mixture is 60% glycol and 40% water, then any leakage will contain the same proportions of the liquids.

To rectify the problem, add small quantities of water. Measure the freeze temperature of the coolant after each addition and continue adding until the desired freezing temperature is achieved.

Leakage Checks

When repairing leaks or working on the stack assemblies, it is highly recommended that several layers of industrial-grade absorbent pads be placed on top of the middle and lower stacks to prevent any coolant spills from falling down on to the lower components, specifically the printed circuit boards.

Most leaks will be visible in the first 30 minutes, and once the system begins to fill and pressurize, you should be constantly inspecting all fittings and connections for drips. It is best to have help in checking the inverter and rectifier section, and the DC Link cabinet. An absorbent cloth is ideal for checking that the coolant is actually leaking and is not just remnants of the repair.

If a leak is a visible at the threaded joint of a stainless steel fitting and a CPVC (plastic) pipe, the leak can often be repaired by tightening the joint.

Use the following values of torque when tightening stainless threaded fittings into CPVC.

Thread Size	Torque N•m (lb•ft)	Typical Wrench Size
1/4 in. NPT	9.5 N•m (7.0 lb•ft)	15 mm (9/16 in.)
3/8 in. NPT	9.5 N•m (7.0 lb•ft)	19 mm (3/4 in.) and 26 mm (1 in.)
1/2 in. NPT	27 N•m (20 lb•ft)	29 mm (1-1/8 in.)

If a leak persists, it will be necessary to drain the system, disassemble the threaded joint, clean the threads and reassemble with a generous amount of Teflon paste applied to the threads.

No matter how well you drain the system with the pumps, be aware that there will be liquid in the tubes, manifolds, and chill blocks. This requires special care in removing connections, as there will definitely be liquid leaking out. Use absorbent pads or containers to catch the liquid.

System Drain

Turn off the pumping system and disconnect the switch on the cabinet door. Attach the transfer pump to Drain/Fill line. Ensure that the flow arrow on pump is in the correct direction. Open valve V6 and V7 (if provided) to pump coolant out.

System Fill

There should be a 200 L (55 U.S. gal) drum of coolant provided with the drive. The drive takes approximately 170 L (45 U.S. gal) to fill the system. The drum SHOULD NEVER BE DISCARDED. In the event that you need to drain the system, you will want this to store the coolant for reuse.

Figure 129 - Cooling Cabinet Overview showing Valve Locations - 1

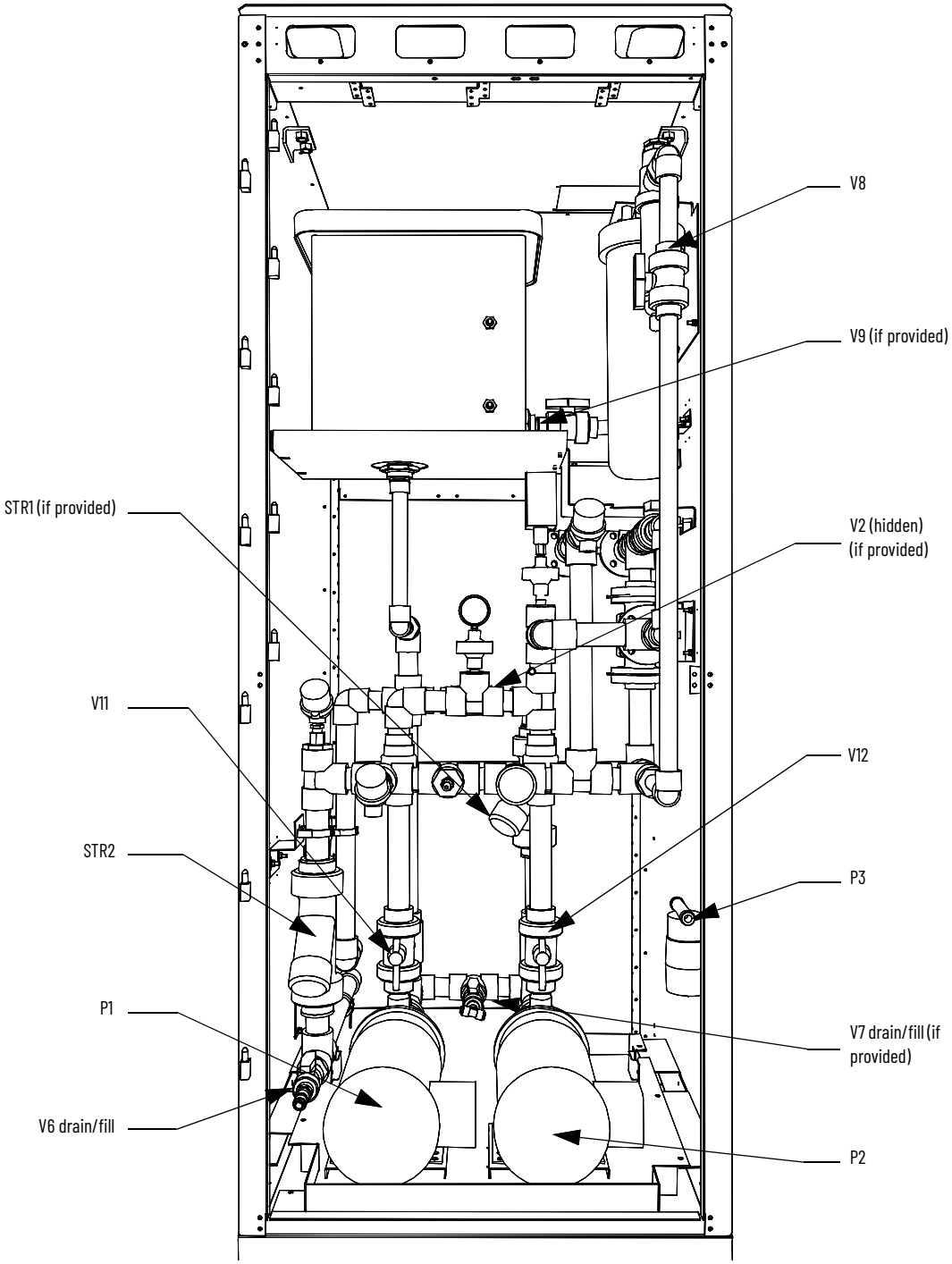

Figure 130 - Cooling Cabinet Overview showing Valve Locations - 2

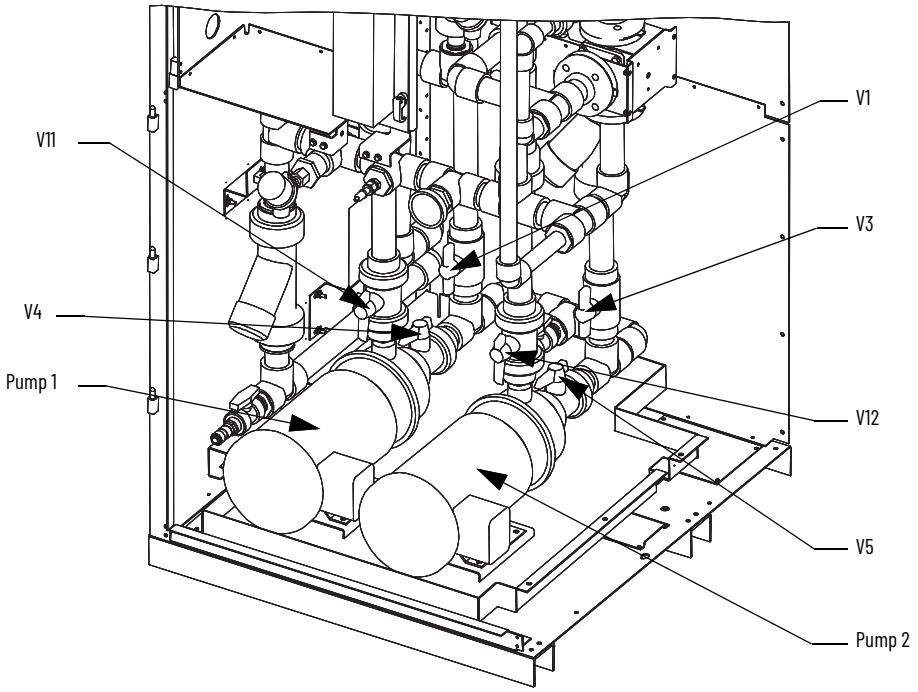

System Fill and Air Venting

WARNING: Do not allow main pumps P1 and P2 to turn when dry. Damage to seals can result.

1. Attach transfer pump to drain/fill line (see Figure 131). Verify the flow arrow on pump is facing the correct direction.

Figure 131 - Drain/Fill Pump

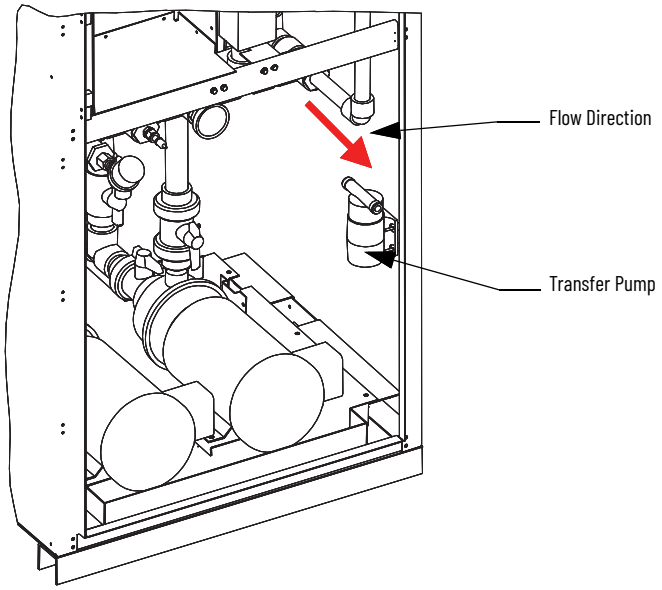

2. Open valves VI, V2, V3, V4, V5, V6, V7, V10, V11, V12, V13, V14.

   Some drives may not have all valves.

3. Open V8 30° rotation to prevent water hammer during air purging.

4. Fill system to above reservoir upper float switch.
5. Close valves V1, V6, V7 to ensure coolant is cleaned through strainer STR1 (if provided).
6. Vent pumps by opening vent plugs on top of each pump. Open carefully to prevent excess coolant leakage. Close vent plugs.
7. Jog each pump for 1 second by manually pushing in contactor located on panel above pumps. Ensure direction is clockwise when viewed from motor side of pump. Check motor electrical connections if not clockwise.
8. Start Pump 2 to circulate coolant and eliminate air in the system. If the pump is noisy and sounds like gravel is being pumped, the pump may be cavitating. Ensure V2 and V3 are open and strainer STR1 (if provided) is not plugged.
9. Continue to fill system to maintain level in reservoir. Eliminate air by running Pump 2 for several hours. Air in the system can be observed in the deionizer filter DEI 1 and strainer STR1 (if provided). Surging or bubbling within the reservoir when pump is turned off indicates air is in the system.

WARNING: Air must be purged from the coolant before drive startup or damage to thyristors can result.

Figure 132 - Mesh Filters and De-ionizing Cartridge

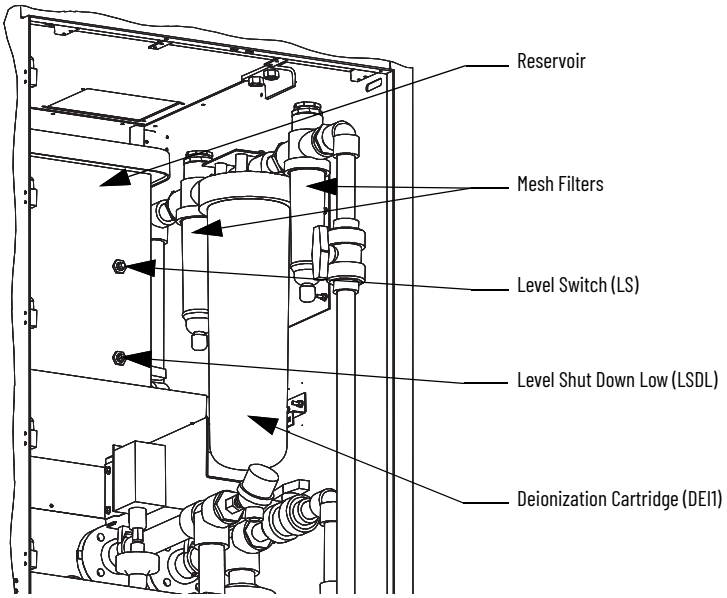

10. If necessary, purge air at heat exchanger by opening heat exchanger vent valves with pump on or slightly opening the top most flange of the heat exchanger with pump on.
11. Stop pump 2.
12. Close V10 and open V1 (if provided).
13. Open vent plug on Pump 1. Open carefully to prevent excess coolant leakage. Close vent plug.
14. Run Pump 1 for several minutes.
15. Place pump selector switch to Auto.

Normal Operation

1. Open valves V1, V2, V3, V4, V5, V8, V11, V12, V13, and V14.

Close valves V6, V7, and V10.

Notes:

Control Component Definition and Maintenance

Control Power Components

There are two configurations in which control power will be distributed for the drive. The different methods are dependent on what drive option the customer has chosen:

1. Line Reactor Drive (refer to Figure 133)
2. Remote Transformer and Starter (refer to Figure 134)

Ride-through

Standard controls with 5 cycle ride-through – The drive main control boards will remain energized for a total of 5 cycles after control power is interrupted. If control power is not restored during the 5 cycles, a controlled shutdown will occur.

Figure 133 illustrates the control power distribution for PWM drives with integral starter/line reactor.

Figure 133 - AFE Line Reactor Drives

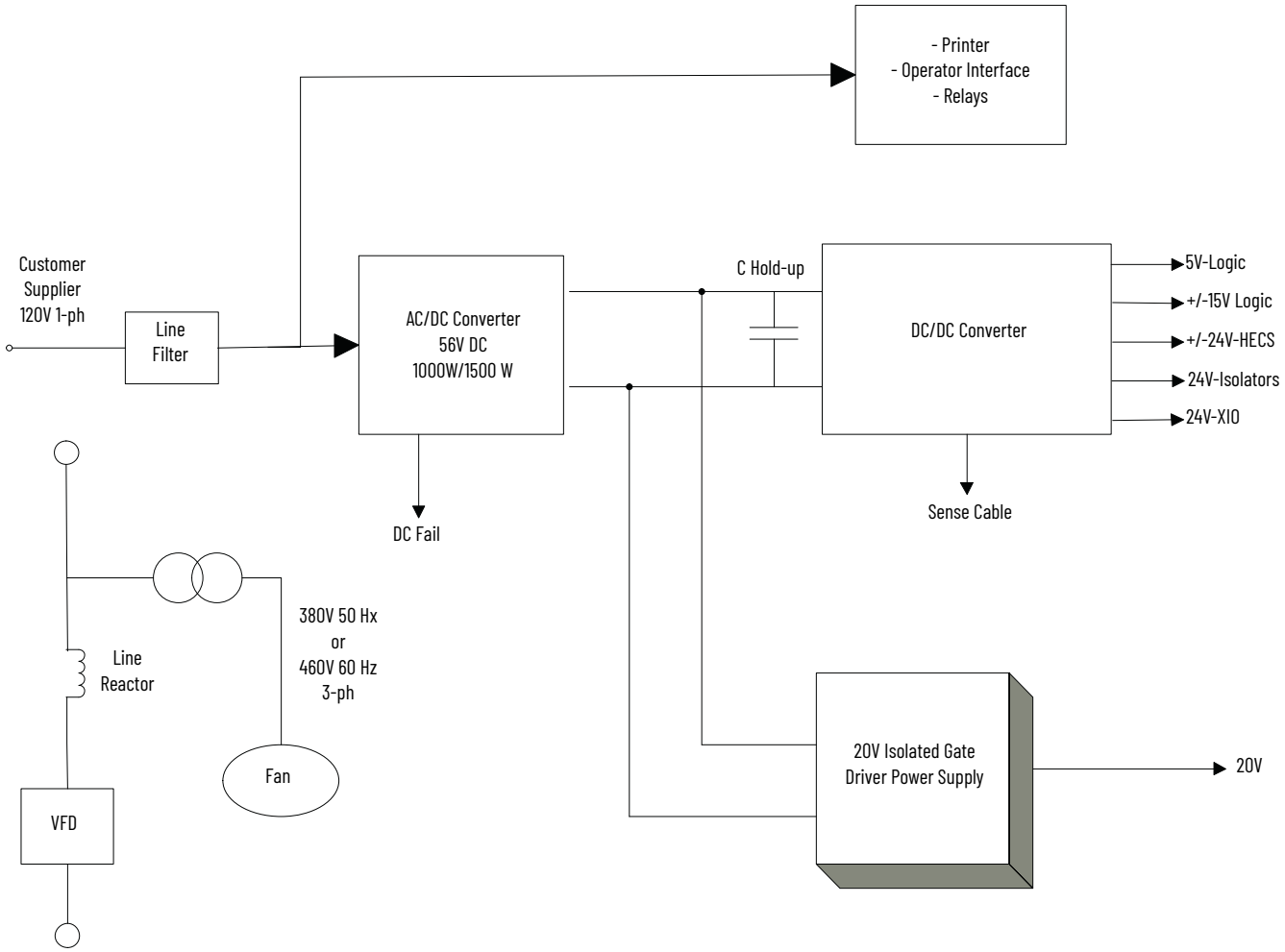

Figure 134 illustrates the control power distribution for AFE drives with remote transformer/starter or integrated line reactor with remote starter.

Figure 134 - AFE Remote Transformer / Starter

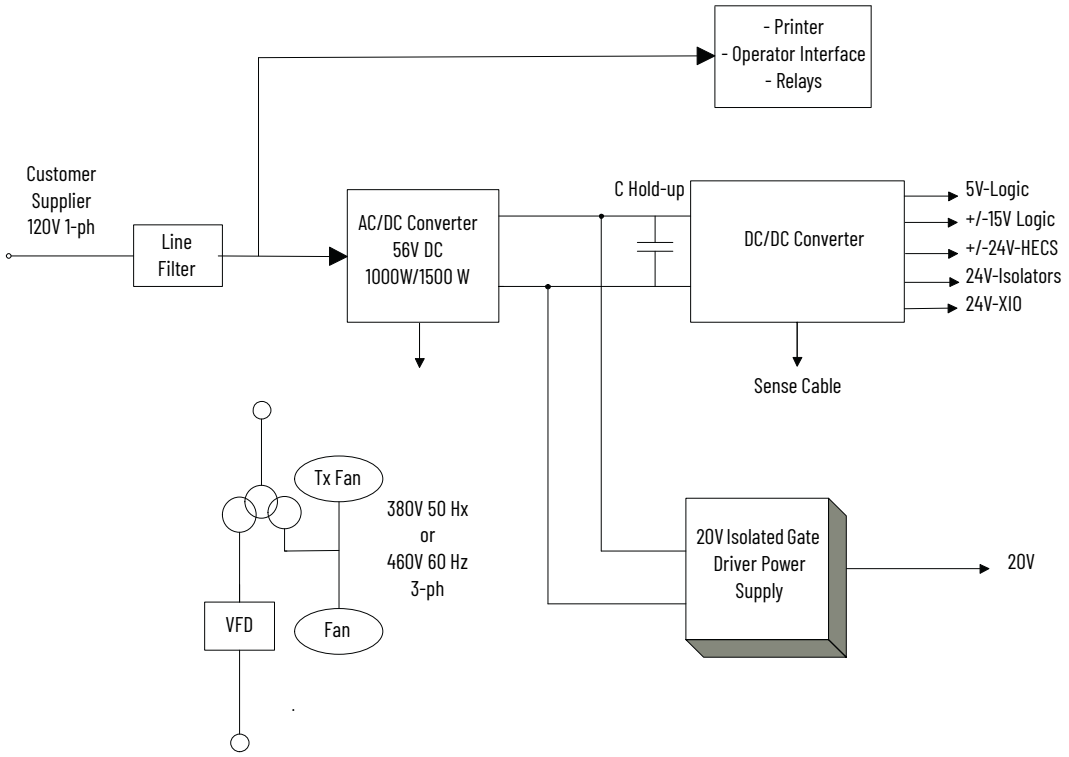

AC/DC Power Supply

The AC/DC power supply is located in the low voltage panel of the drive (see Figure 140). The load demands on the AC/DC converters are the DC/DC converter and up to six IGDPS modules. The DC/DC is a fixed load; however, the quantity of IGDPS modules will vary depending upon the drive configuration.

Description

The AC/DC power supply accepts single phase voltage and produces a regulated 56V DC output for the DC/DC power supply and the HV IGDPS modules for the SGCTs. The input and output voltages are monitored and fail signals are annunciated upon either voltage going below a pre-set level.

Figure 135 - AC/DC Converter Power Supply

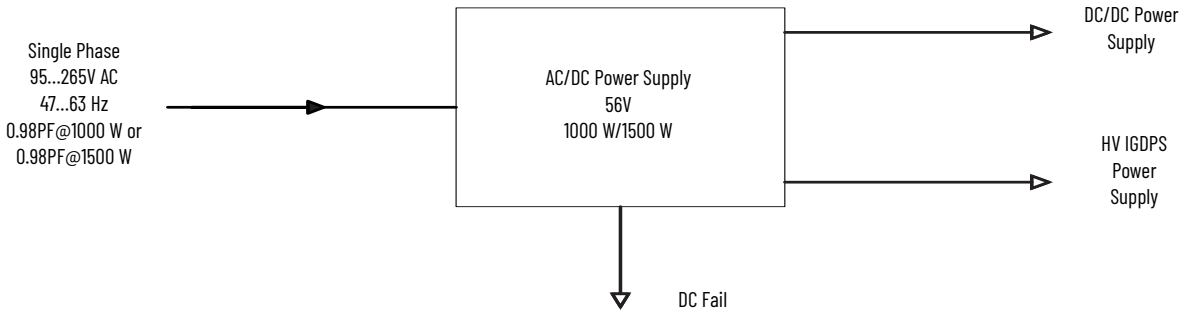

DC FAIL: Upon loss of DC output (V outputs ≤ 49 V DC) this output goes from low to high.

Terminal / Connections Descriptions

The terminal connections are shown in Figure 136.

Figure 136 - Terminal Locations On AC/DC Power Supply

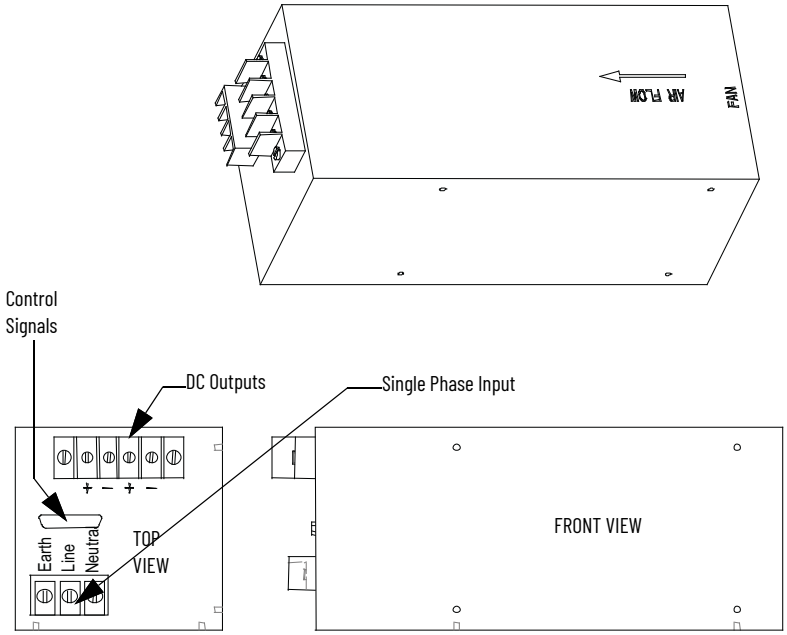

	PIN#	LABEL
P1-AC input	1	EARTH
	2	LINE
	3	NEUTRAL

P2-DC output	1	+56V
	2	+56V COMM
	3	+56V
	4	+56V COMM

P3-FAIL output	3	DC POWER FAIL (OUTPUT POWER GOOD)
	15	CURRENT SHARING
	14	DC POWER FAIL COMMON

Verify the output of the supply is 56V DC.

There is a potentiometer on the top of the power supply that adjusts the 56V DC output for the power supply. Isolate the output of the power supplies; multiple supplies in series affect your measurements. With the control power on and the output of the AC/DC Converter isolated from the drive control, adjust the potentiometer until the output equals 56V DC. Perform this test on each power supply. When all adjustments are complete, reconnect the power supply to the circuit and remeasure the output. Readjust if necessary.

If it is not possible to maintain 56V DC, the power supply can be faulty.

Replacement Procedure

1. Ensure control power has been isolated and locked out.
2. Disconnect the terminals at the unit.
3. Remove the two M6 bolts per Figure 137.
4. Extract the power supply complete with bracket from the drive.
5. Remove the bracket from the failed power supply (four M4 screws and nylon shoulder washers).
6. Attach bracket to replacement power supply.

Verify that the black insulation is between the AC/DC power supply and the mounting plate.

7. Repeat Steps 5 through 1 in this order to replace the unit (see Figure 137).
8. Reapply control power and verify voltage levels.

Figure 137 - Replacement of AC/DC Power Supply on Low Voltage Panel

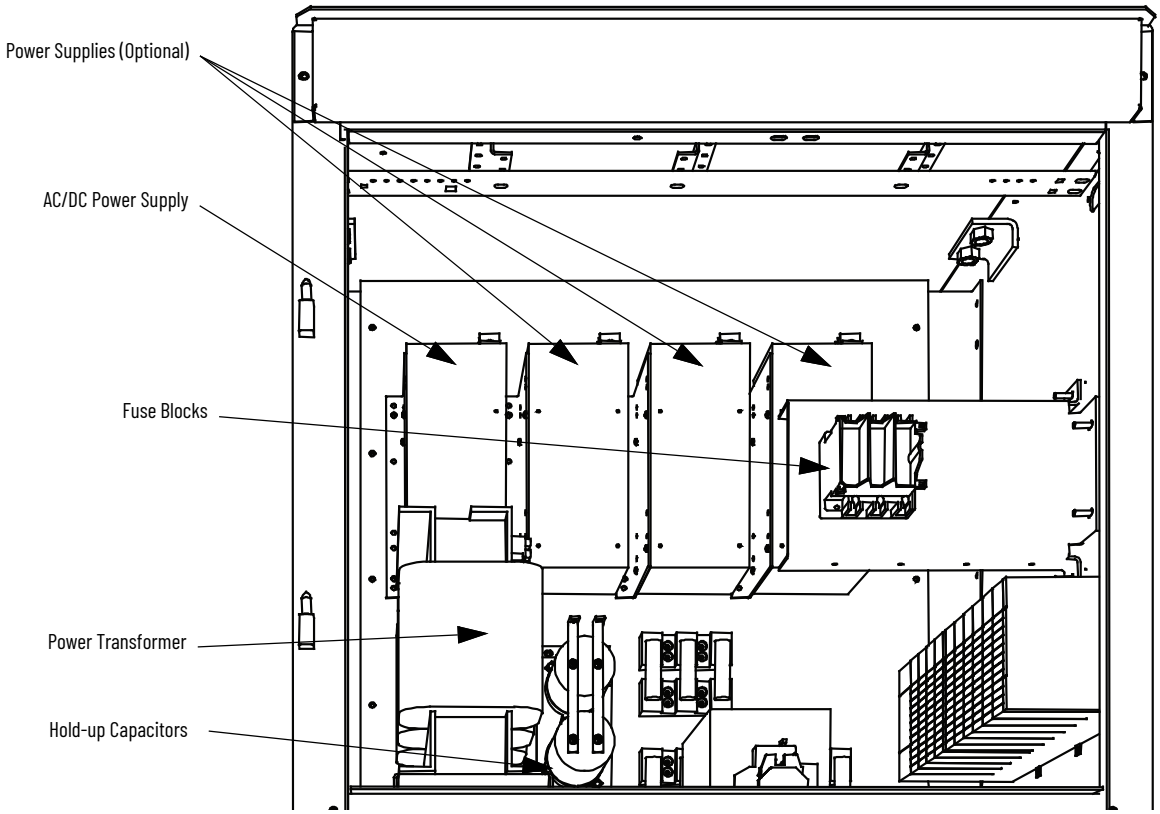

UPS Option

The PowerFlex® 7000L "C" frame drive has the option for internal and external UPS power to keep the control power active within the drive in the event of a control power loss. Figure 138 shows the current configuration of the internal UPS option:

Figure 138 - 300W AC/DC Power Supply

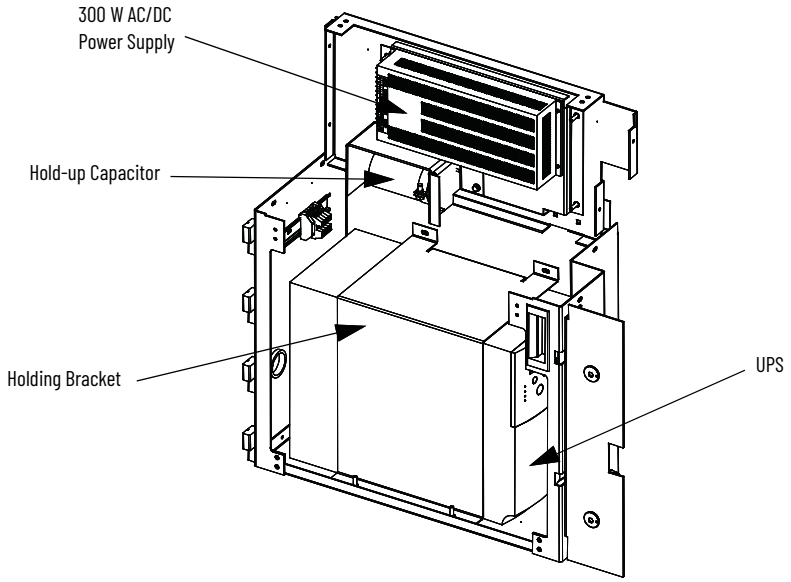

The UPS is installed in the incoming cabling section, below the LV control section.

The UPS keeps control power to the critical 120V AC loads and an extra AC/DC power supply that feeds the DC/DC Power Supply for powering all the drive control components. The main drive cooling fan, and the AC/DC Power Supply that feeds the IGDPS boards are not powered from this UPS.

The UPS uses the AS400 communication protocol, and feeds several status signals back to the ACB to control responses to various conditions, for example, low batteries, loss of input power, or UPS on bypass.

If the customer has an external UPS, the firmware will not expect any of the signals mentioned in the above section, and will not display any information relating to the UPS status. The firmware operates in the same manner regarding the operation of the drive with an internal or external UPS.

The output of the UPS feeds a 300W AC/DC Power Supply. This is 20% of the standard AC/DC Power Supply used in the drive because the load that is represented by the DC/DC Power Supply is much smaller than the load of the IGDPS boards, and we are able to reduce the size accordingly. We still use the standard AC/DC Power Supply to feed the IGDPS boards. The 300W AC/DC Power Supply has its AC input monitored by the UPS, and the DC output is monitored by the ACB board for fault conditions.

There is also a hold-up capacitor on the output of the 300W AC/DC Power Supply to maintain the 56V DC in the event of a failure of the power supply.

Replace the UPS

IMPORTANT To replace the UPS battery, see the UPS user manual that was shipped with the drive.

1. Isolate and lockout the control power.
2. Remove the hardware that fastens the holding bracket to the cabinet assembly and remove the holding bracket.
3. Disconnect the input and output wiring connected to and from the UPS.
4. Disconnect the 15-pin status plug and remove the UPS.

ATTENTION: Before installing the new UPS, check the battery recharge date on the shipping carton label. If the date has passed and the batteries were never recharged, do not use the UPS. Contact Rockwell Automation.

5. Before installing the new UPS, the internal battery must be connected.[(a)]
   a. Remove the UPS front cover. Push down on the top of the cover and pull the cover towards you to unclip it from the cabinet.
   b. Connect the white connectors together, connect red to red, and black to black. Verify that there is a proper connection.
   c. Remove and retain the two screws from the screw mounts.
   d. Place the battery connector between the screw mounts. Reinstall the two screws to hold the connector in place.
   e. Replace the UPS front cover.

Figure 139 - Connect the internal UPS battery

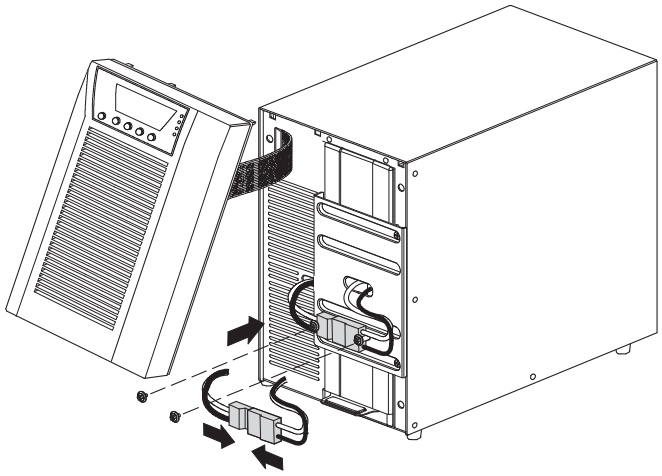

6. Reconnect the connections removed in the previous steps.
7. Before reconnecting the mounting bracket, apply control power to the unit and verify the UPS is configured for the AS400 communication protocol. See the manual that comes with the UPS for instructions.
8. Once this has been confirmed, install the mounting bracket.

(a) Reprinted from 700-3000 VA User's Guide by permission of Eaton Corporation.

Low Voltage Control Section

The low voltage control section panel houses all of the control circuit boards, relays, operator interface terminal, DC/DC power supply, and most other low voltage control components. Refer to Figure 140 for a generic representation of a low voltage tub arrangement.

Figure 140 - Low Voltage Compartment

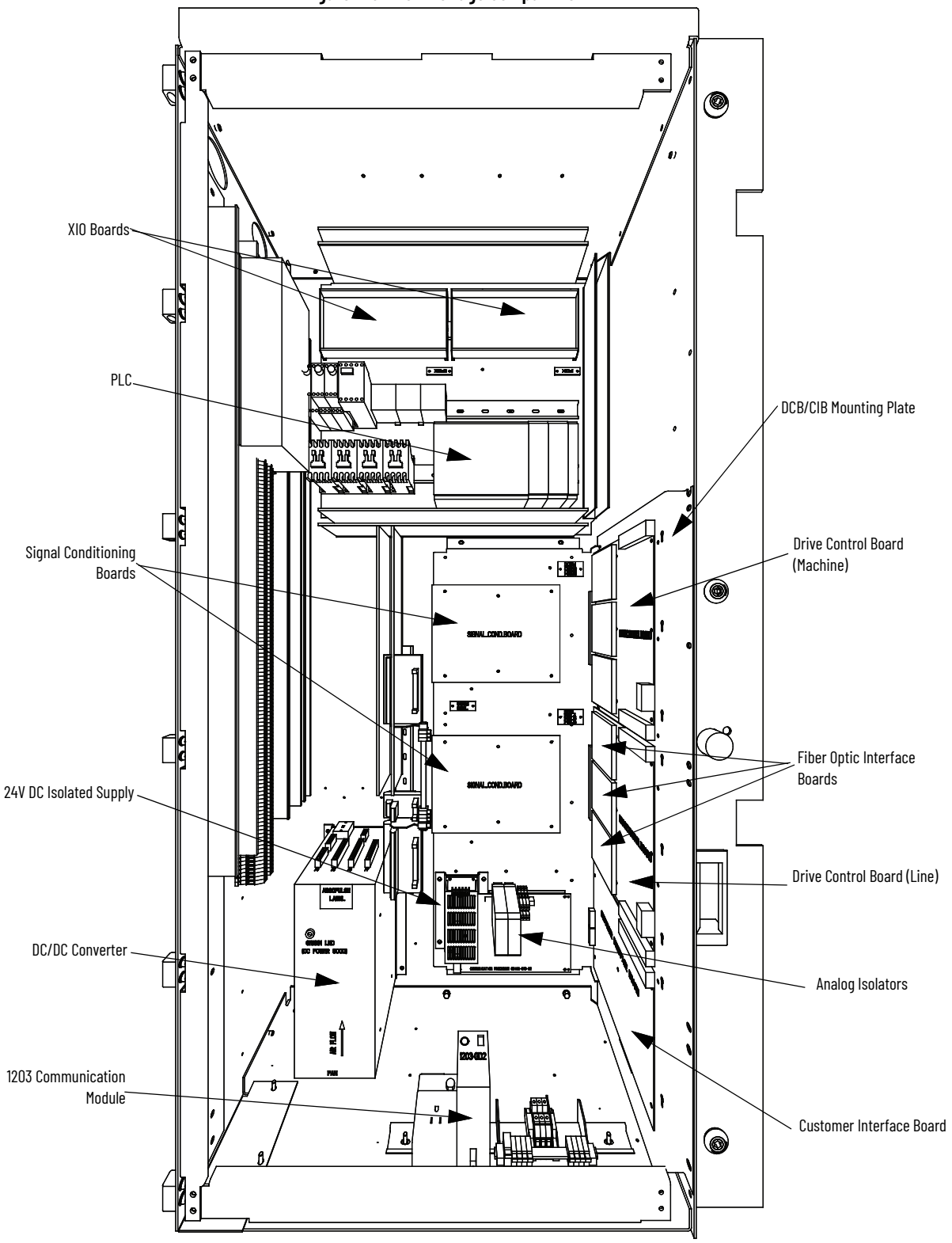

DC/DC Power Supply Description

The DC/DC power supply is used as a source of regulated DC voltage for various logic control boards and circuits. The input to this power supply is from a regulated 56V DC source.

Figure 141 - DC/DC Converter Power Supply

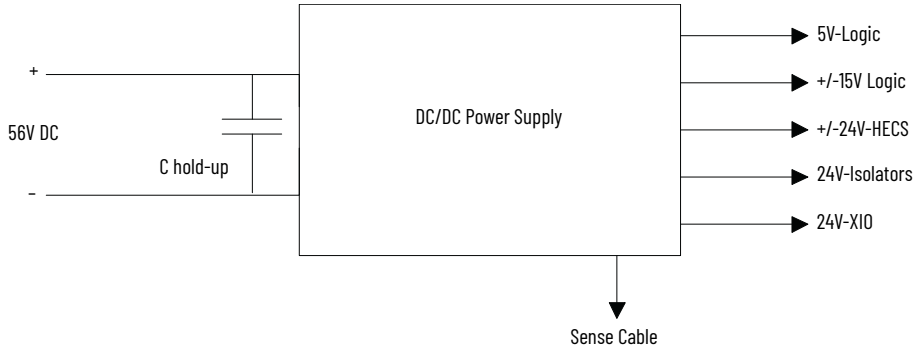

The capacitor at the input terminals is for power dip ride-through purposes. Upon loss of the 56V input, the capacitors (C hold-up) will maintain the voltage level. This component is not required in all configurations.

Due to the critical nature of the ACB/DPM Logic power source, the DC/DC power supply has been designed to provide redundancy for the +5V rail. There are two separate +5V outputs, each capable of powering the logic boards. In the event of one failing, the other power supply will be automatically switched in to provide the output power.

Terminal/Connections Descriptions

	PIN No.	Label	Description Only
P1 - DC Input	1	+56V	+56V input
	2	+56V COMM	+56V common
	3	EARTH	earth ground
P2 - SENSE (To ACB)	**PIN No.**	**Label**	**Description Only**
	1	+56V	+56V input supply
	2	+56V RTN	+56V input supply return
	3	NC	Not Connected
	4	NC	Not Connected
	5	+24V	Isolated +24V Supply
	6	+24V RTN	Isolated +24V Supply return
	7	NC	Not Connected
	8	NC	Not Connected
	9	+5VA	Primary +5V supply, before OR'ing diode
	10	DGND (com1)	+5V, ±15V Common
	11	+5VB	Secondary +5V supply, before OR'ing diode
	12	DGND (com1)	+5V, ±15V Common
	13	ID0	Power Supply ID Pin 0
	14	ID1	Power Supply ID Pin 1
P3 - ISOLATOR (To Isolator Modules)	**PIN No.**	**Label**	**Description Only**
	1	ISOLATOR (+24V, 1A)	+24V, 1A/com4
	2	ISOL_COMM (com4)	0V/com4
	3	EARTH	EARTH

	PIN No.	Label	Description Only
P4 – PWR (To ACB)	1	+24V_XIO (+24V, 2A)	+24V, 2A/com3
	2	XIO_COMM (com3)	0V/com3
	3	+HECSPWR (+24V, 1A)	+24V, 1A/com2
	4	LCOMM (com2)	0V/com2
	5	–HECSPWR (-24V, 1A)	-24V, 1A/com2
	6	+15V_PWR (+15V, 1A)	+15V, 1A/com1
	7	ACOMM (com1)	0V/com1
	8	–15V_PWR (-15V, 1A)	-15V, 1A/com1
	9	+5V_PWR (+5V, 5A)	+5V, 10A/com1
	10	DGND (com1)	0V/com1
	11	EARTH	earth ground

Replacement Procedure for DC/DC Power Supply

(Refer to Figure 142)

1. With the drive energized, check that all output voltages are present. (View 1)
2. De-energize the drive, isolate and lock out the control power, and remove all wire connections from the unit. (View 1)
3. Remove quantity of four M6 (H.H.T.R.S.) that will allow the DC/DC Power Supply Assembly to be removed from the Low Voltage Panel. (View 1)
4. Remove quantity of four M4 (P.H.M.S.) and Nylon Shoulder Washers from the back of the Mounting Plate. (View 2)
5. Replace old DC/DC Power Supply with the new one. NOTE: The Black Insulation must be between the DC/DC Power Supply and the Mounting Plate. Repeat Steps 4, 3, 2, 1 in this order to replace unit. (View 2)
6. Ensure the ground wire of P4 plug is connected to the ground by M10 bolt.

Figure 142 - Replacement of DC/DC Power Supply

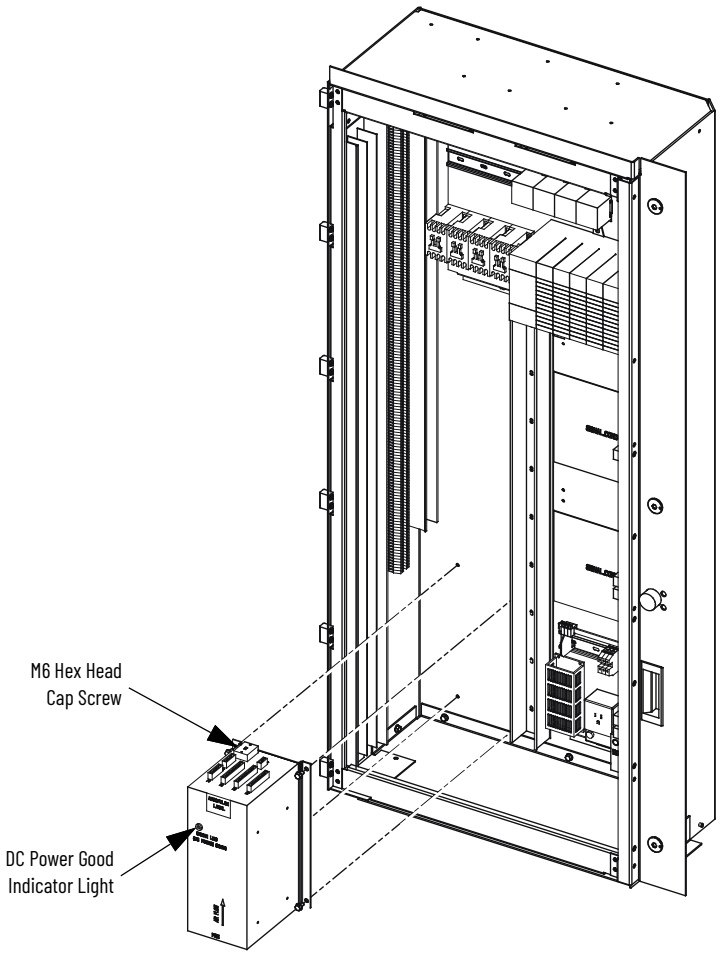
M6 Hex Head
Cap Screw
DC Power Good
Indicator Light

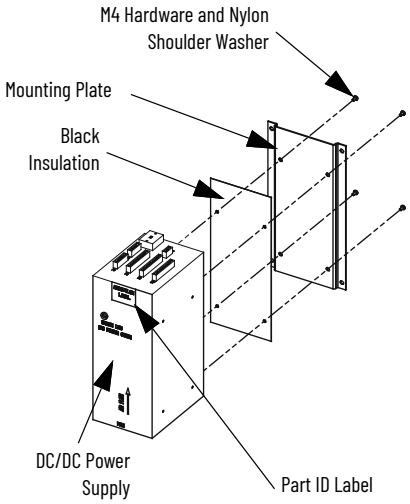
M4 Hardware and Nylon
Shoulder Washer
Mounting Plate
Black
Insulation
DC/DC Power
Supply
Part ID Label

Drive Processor Module

This module contains the control processors. It is responsible for all the drive control processing and stores all of the parameters used for the drive control.

Figure 143 - Drive Processor Module (DPM)

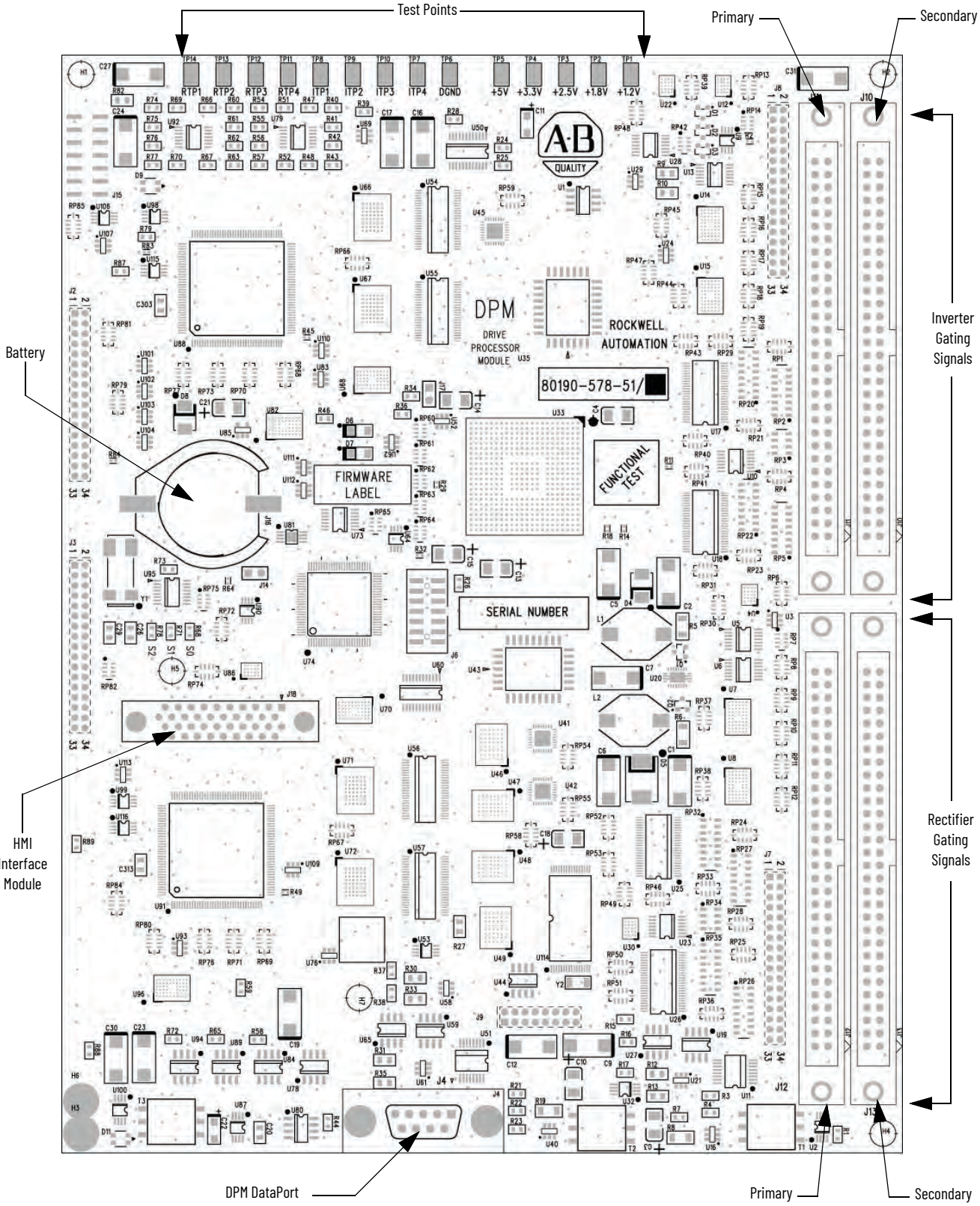

The following is the list of test points on the DPM.

Diagnostic Test Points on the DPM have a voltage output range of -5...5V.

Table 8 - Test Points on Drive Processor Module

Test points	Name	Description
DPM-TP1	+1.2V	+1.2V DC power supply
DPM-TP2	+1.8V	+1.8V DC power supply
DPM-TP3	+2.5V	+2.5V DC power supply
DPM-TP4	+3.3V	+3.3V DC power supply
DPM-TP5	+5V	+5V DC power supply
DPM-TP6	DGND	Digital ground
DPM-TP8	ITP1	Digital to Analog output – Assignable diagnostic test point
DPM-TP9	ITP2	Digital to Analog output – Assignable diagnostic test point
DPM-TP10	ITP3	Digital to Analog output – Assignable diagnostic test point
DPM-TP7	ITP4	Digital to Analog output – Assignable diagnostic test point
DPM-TP11	RTP4	Digital to Analog output – Assignable diagnostic test point
DPM-TP12	RTP3	Digital to Analog output – Assignable diagnostic test point
DPM-TP13	RTP2	Digital to Analog output – Assignable diagnostic test point
DPM-TP14	RTP1	Digital to Analog output – Assignable diagnostic test point

This table defines the states of LED D9 and D11 on the DPM board. D9 is used for the Inverter side processor and D11 is for the Rectifier side processor. The other two LEDs (D6 and D7) are the watchdogs for the Inverter and Rectifier code respectively.

Table 9 - Description of D9 and D11 Function

Color	Rate or Count (Pulse)	Meaning
Green	10 Count	Pre-execution OK
Red	.25 Hz	No boot code
Green	.25 Hz	No Application
Green	.5 Hz	Downloading via Serial Port
Green	2 Hz	Serial Port Active – i.e. Terminal
Green	1 Hz	Waiting/Loading Application
Green	Solid	Operation Running or Successful
Red	Solid	Operation Failed
Red	2 Count	POST – RAM Failed
Red	3 Count	POST – NVRAM Failed
Red	4 Count	POST – DPRAM Failed
Red	8 Count	FPGA Loading Failed
Red	9 Count	POST – USART Failed: 1 Green Count = Port 1 2 Green Count = Port 2
Red	10 Count	End of Code Reached
Red	11 Count	Download – CRC Error
Red	14 Count	Download – Overflow Error

Drive Processor Module Replacement

Before replacing the Drive Processor Module, record all of the programmed drive parameters and settings; specifically, the parameters, fault masks, fault descriptions, and PLC links. This information resides in NVRAM on each board, and as a result you may lose your settings with a new board. Save parameters in the terminal memory. Other options include a flashcard, HyperTerminal, the door-mounted printer, or DriveTools™ software to record the parameters to a file. The printer and HyperTerminal options enable you to print configuration information. Otherwise, record information by hand. If a board fails, you likely cannot save parameters after the failure.

Save all parameters when you are finished commissioning or servicing the drive. In this case you should contact the customer to see if they have a copy of the last parameters, or contact Product Support to check if they have a copy.

1. Record all drive setup information using any of the options above, if possible.
2. Ensure that all medium voltage and control voltage power to the drive is isolated and locked out.
3. It is required to first remove the transparent sheet on top of the Drive Processor Module by removing the four screws.
4. Use static strap before removing any connectors.
5. Remove the connectors J4, J11, and J12 after proper identification and marking if necessary. Use the electrical drawing as the reference.
6. Remove the four screws on the corners of the board fastening the board to the standoffs on the Analog Control Board ACB.
7. Gently remove the Drive Processor Module from the four, 34-pin female connectors and one, 16-pin female connector on the ACB.
8. **Remove the DIM module from the DPM and plug it on the new DPM before the replacement of DPM.**
9. Follow Steps 7…3 in reverse to reinstall the boards back into the low voltage control cabinet.
10. Apply control power to the drive. The DPMs ship without installed firmware, so the drive will shift into download mode. Install firmware in the drive following the guidelines the Installation Manual.
11. Program the drive. See publication 7000-TD002. Save the parameters to NVRAM and externally, using the options described earlier in this section.

Figure 144 - ACB and DPM Replacement

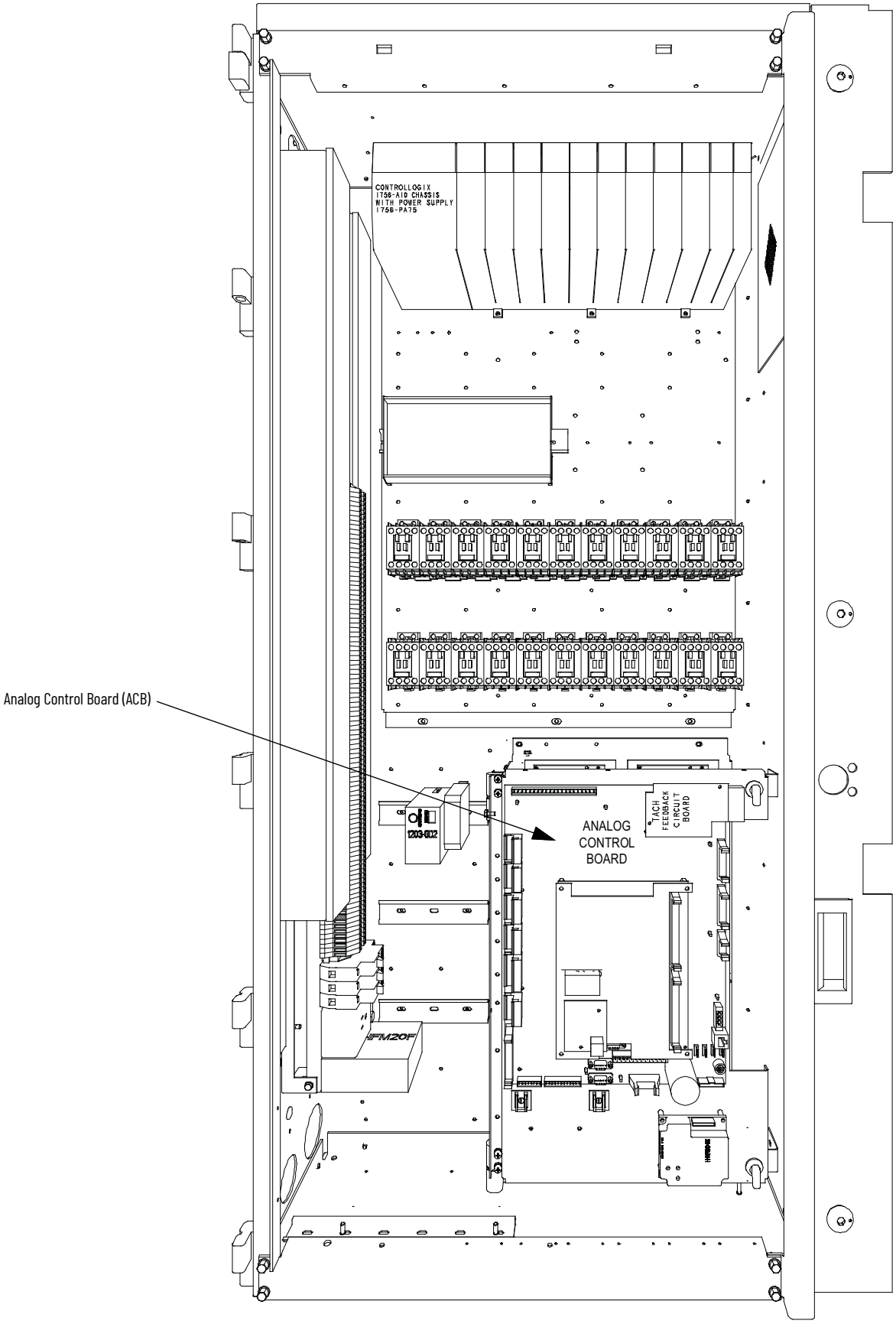

Analog Control Board

The Analog Control Board (ACB) is the hub for all control-level signals external to the drive. Analog I/O, External Fault signals (through the XIO board), DPI™ communication modules, Remote I/O, terminal interface, printers, modem, and other external communication devices are routed through this board.

Figure 145 - Analog Control Board

The Analog Control Board receives all of the analog signals from the internal components. This includes the current and voltage feedback signals. The boards also have isolated Digital I/O for e-stops, contactor control and status feedback. All of the test points for the currents, system voltages, control voltages, and flux are on these boards.

Table 10 - Connectors on Analog Control Board

ACB Connectors	Description
ACB-J1	Control I/O & Control Power Monitor
ACB-J2	Line current inputs, CT2U, CT2W
ACB-J3	Line current inputs, CT3U, CT3W
ACB-J4	Line current inputs, CT4U, CT4W
ACB-J5	Motor current inputs, HECSU, HECSW
ACB-J6	DClink current inputs, HECSDC1, HECDC2
ACB-J7	Ground fault & CMC Neutral current inputs, GFCT, INN
ACB-J8	Isolated & Non-isolated analog inputs, AIN1,AIN2,AIN3 and Non-isolated outputs, AOUT1, AOUT2, AOUT3, AOUT4
ACB-J9	Air pressure inputs, AP0, AP1(input from TSP)
ACB-J10	Meter outputs, AOUT5, AOUT6, AOUT7, AOUT8 and Speed Pot input, AIN0
ACB-J11	Communication connections, printer outputs
ACB-J12	Communication connections, PanelView
ACB-J13	DC power supplies, XIO (+24V), +/-15V, +/-24V, +5V
ACB-J14	DC power supply monitoring, 5V1, 5V2, DC-BUS
ACB-J15	DC-ABUS +56V output monitoring in UPS option
ACB-J16	DPI interface
ACB-J17	Communication connections, scan ports
ACB-J18	DC fail signal monitoring
ACB-J19	DC fail signal monitoring
ACB-J20	DC fail signal monitoring
ACB-J21	DC fail signal monitoring
ACB-J22	Communication connection, XIO link CAN interface
ACB-J23	Communication connection, parallel drive
ACB-J24	UPS fail signal monitoring
ACB-J25	Line voltage synchronous transfer feedback voltage inputs VSA, VSB, VSC
ACB-J26	Motor & line DC link and Neutral Point Voltage inputs
ACB-J27	AC Motor & Line voltage feedback inputs
ACB-J28	Encoder interface
ACB-J30	DPM connection, A/D SUB system
ACB-J31	DPM connection, DACs serial data
ACB-J32	DPM power supply, +5V
ACB-J33	DPM connection, Faults & other I/O
ACB-J34	DPM connection, Encoder

Table 11 - Test Points on Analog Control Board

Test Points	Name	Description
TP1	Vuv	Motor Voltage Feedback, UV
TP2	Vvw	Motor Voltage Feedback, VW
TP3	Vwu	Motor Voltage Feedback, WU
TP4	Iu	Motor Current, HECSU
TP5	Iw	Motor Current, HECSW
TP6	Vzs	Zero Sequence Generation Motor side, VZS
TP7	Vn	Motor Side Filter CAP Neutral Voltage, MFCN
TP8	V_pk	Motor Over Voltage Detection for UVW
TP9	Vdci1	Motor Side DCLINK Voltage for Bridge #1, VMDC1
TP10	Vdci2	Motor Side DCLINK Voltage for Bridge #2, VMDC2
TP11	Vuvs	Line Voltage Synchronous Feedback, VSAB
TP12	V2uv	Line Voltage Feedback, 2UV
TP13	V2vw	Line Voltage Feedback, 2VW
TP14	V2wu	Line Voltage Feedback, 2WU
TP15	I2u	Line current, CT2U
TP16	I2w	Line current, CT2W
TP17	Vzs2	Zero Sequence Generation Line side, VZS2
TP18	Vn1	Line Filter CAP Neutral Voltage for Bridge #1, LFCN1
TP19	V2_pk	AC over voltage detection for 2UVW
TP20	Vdcr1	Line side DCLINK Voltage for Bridge#1, VLDC1
TP21	Idc1	DCLINK current, HECSDC1
TP22	Vvws	Line Voltage Synchronous Feedback, VSBC
TP23	V3uv	Line Voltage Feedback, 3UV
TP24	V3vw	Line Voltage Feedback, 3VW
TP25	V3wu	Line Voltage Feedback, 3WU
TP26	I3u	Line current, CT3U
TP27	I3w	Line current, CT3W
TP28	Vzs3	Zero Sequence Generation Line side, VZS3
TP29	Vn2	Line Filter CAP Neutral Voltage for Bridge #2, LFCN2
TP30	V3_pk	AC over voltage detection for 3UVW
TP31	Vdcr2	Line side DCLINK Voltage for Bridge#2, VLDC2
TP32	Idc2	DCLINK current, HECSDC2
TP33	Vwus	Line Voltage Synchronous Feedback, VSCA
TP34	V4uv	Line Voltage Feedback, 4UV
TP35	V4vw	Line Voltage Feedback, 4VW
TP36	V4wu	Line Voltage Feedback, 4WU
TP37	I4u	Line current, CT4U
TP38	I4w	Line current, CT4W
TP39	Vzs4	Zero Sequence Generation Line side, VZS4 (spare one)
TP40	Vnn	CMC Neutral Voltage, VNN
TP41	Inn	CMC Neutral current, INN
TP42	Ignd	Ground Fault current, GFCT
TP43	Vspr	Spare channel for inputs
TP44	Vmtrp	Motor Over Voltage Detection set point
TP45	A+	Encoder A+ input
TP46	B+	Encoder B+ input
TP47	Z+	Encoder Z+ input
TP48	A-	Encoder A-input
TP49	B-	Encoder B- input
TP50	Z-	Encoder Z- input
TP51	CP1	Control Power monitoring for channel 1

Table 11 - Test Points on Analog Control Board (Continued)

Test Points	Name	Description
TP52	CP2	Control Power monitoring for channel 2
TP53	CP3	Control Power monitoring for channel 3
TP54	CP4	Control Power monitoring for channel 4
TP55	VItrp	AC Over Voltage Detection set point for 2UVW & 3UVW
TP56	AGND	Analog ground
TP57	AGND	Analog ground
TP58	AGND	Analog ground
TP59	AGND	Analog ground
TP60	+5V	+5V DC power supply
TP61	+15V	+15V DC power supply
TP62	-15V	-15V DC power supply
TP63	+24V	+24V DC power supply
TP64	-24V	-24V DC power supply
TP65	24VCOM	+/- 24V common
TP66	DGND	Digital ground
TP67	AGND	Analog ground
TP68	AP1	Analog Control Inputs, Air pressure input, AP1
TP69	AP0	Analog Control Inputs, Air pressure input, AP0
TP70	AIN1	Analog Control Input, AIN1
TP71	AIN2	Analog Control Input, AIN2
TP72	AIN0	Analog Control Input, AIN0
TP73	AIN3	Analog Control Input, AIN3
TP74	IPIS	Input Isolating Switch
TP75	IPCS	Input Contactor Status
TP76	IP	Input Contactor Command
TP77	OPIS	Output Isolating Switch
TP78	OPCS	Output Contactor Status
TP79	OP	Output Contactor Command
TP80	BPIS	Bypass Isolating Switch
TP81	BPCS	Bypass Contactor Status
TP82	BP	Bypass Contactor Command
TP83	DGND	Digital Ground Return

Light-emitting Diodes

There are two power light-emitting diodes on the ACB labeled D7 and D9:

- D9 is the ±15V DC voltage-OK signal
- D7 is the +5V DC voltage present signal.

Interface Module (IFM)

The Interface Module is used to make all customer useable connections to the ACB. The pin numbers that are listed on the following pages refer to IFM pin numbers.

Figure 146 - Interface Module (IFM)

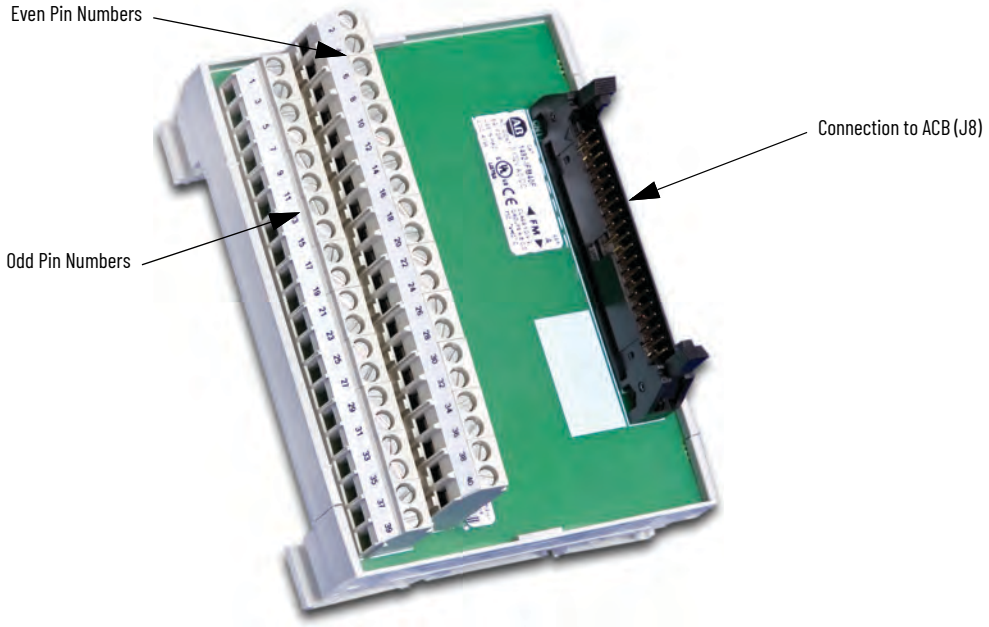

Analog Inputs and Outputs

The PowerFlex 7000 "C" frame offers one isolated process current loop transmitter and three isolated process current loop receivers, embedded into the control. These are accessible on the ACB.

The isolated process output is configured as 4-20 mA. The three isolated process inputs are individually configurable for either a range of -10/0/+10V or 4-20 mA.

The following information will show the connections for each.

Current Loop Transmitter

The current loop transmitter will transmit a 4-20 mA output to an external receiver. The loop compliance on the transmitter is 12.5V. Loop compliance is the maximum voltage at which a transmitter can generate to achieve the maximum current and is usually a function of the power supply voltage. Therefore, the PowerFlex 7000L "C" frame transmitter can drive a receiver with an input resistance up to 625 Ω. Figure 147 shows a block diagram of the transmitter.

Figure 147 - Process Loop Transmitter Diagram

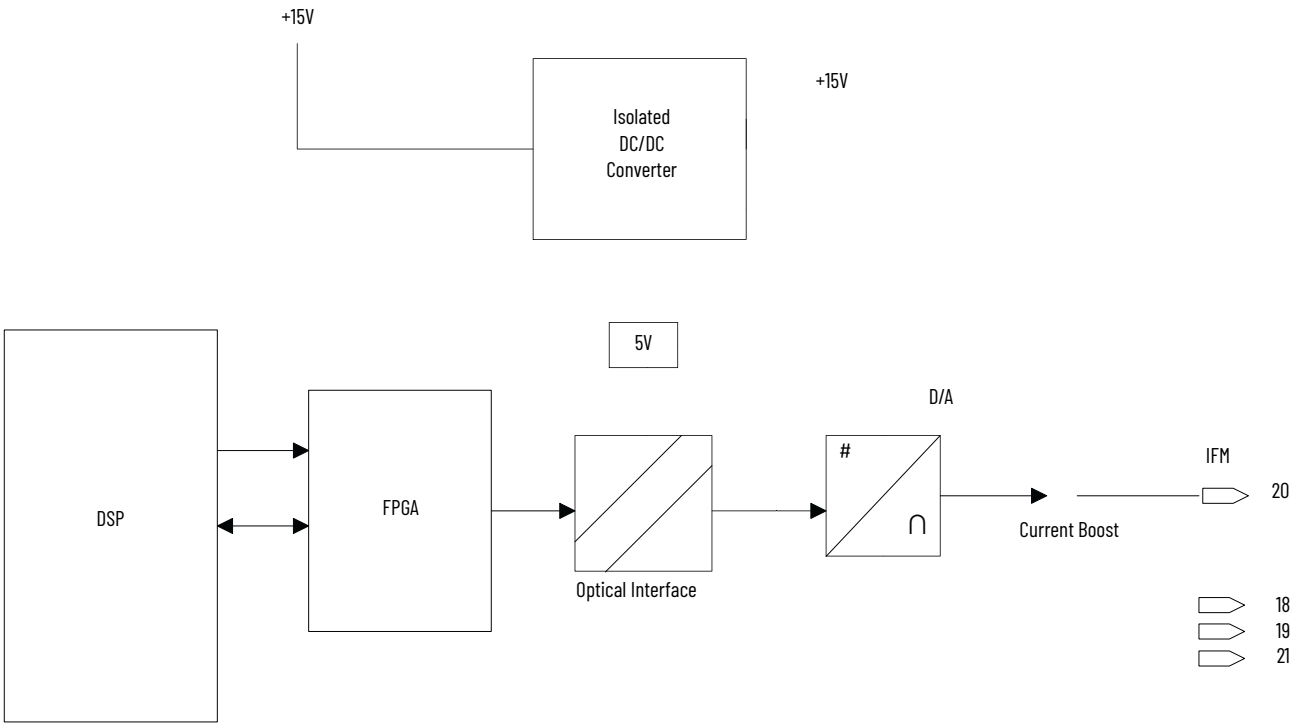

This type of transmitter is known as a 4-wire transmitter, and will "sink" current from a receiver. The receiver is connected by two wires only from pins 20 (+ connection) and either pins 18, 19, 21 (- connection).

The recommended connection is shown above. The type of shielded cable used is application specific and is determined by the length of the run, the characteristic impedance and the frequency content of the signal.

Isolated Process Receiver

These inputs are individually configurable to accept either a -10/0/+10V input signal or a 4-20 mA signal. When configured for voltage input, each channel has an input impedance of 75 kΩ. When used as a current loop input, the transmitter must have a minimum loop compliance of 2V to satisfy the 100 Ω input impedance. Regardless of input configuration, each input is individually isolated to ± 100V DC or 70V rms AC.

A block diagram of the receiver is shown in Figure 148.

Figure 148 - Process Loop Receiver Diagram

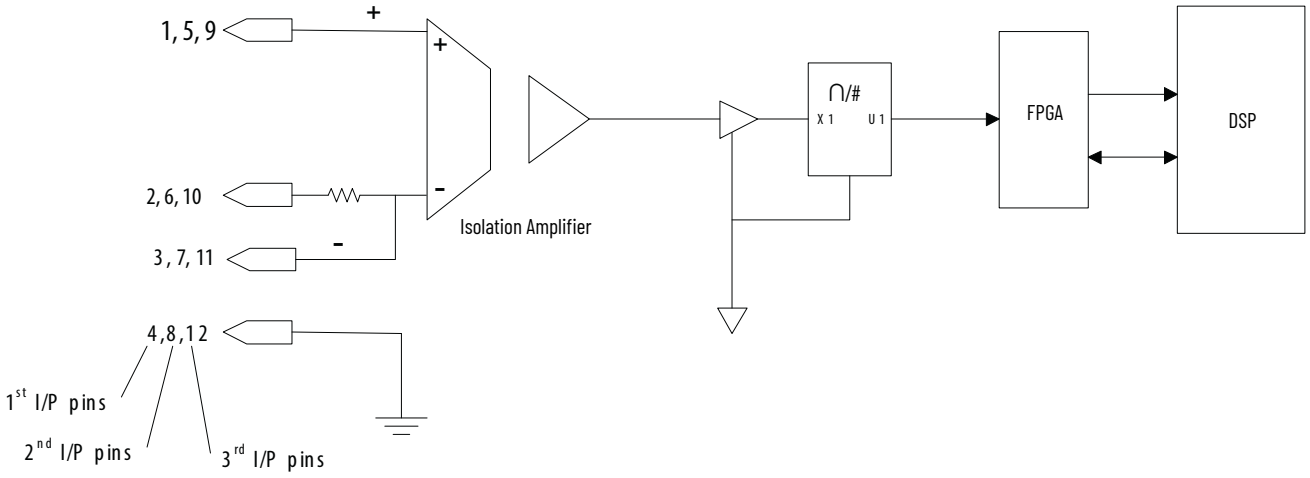

Non-Isolated Process Outputs

The drive supplies four non-isolated -10/0/+10V outputs for customer use. These outputs can drive loads with impedances as low as 600 Ω. These outputs are all referenced to the Drive AGND and therefore should be isolated if they are required to drive outside the PowerFlex "C" frame enclosure.

Figure 149 - Non-Isolated Configurable Analog Outputs on ACB

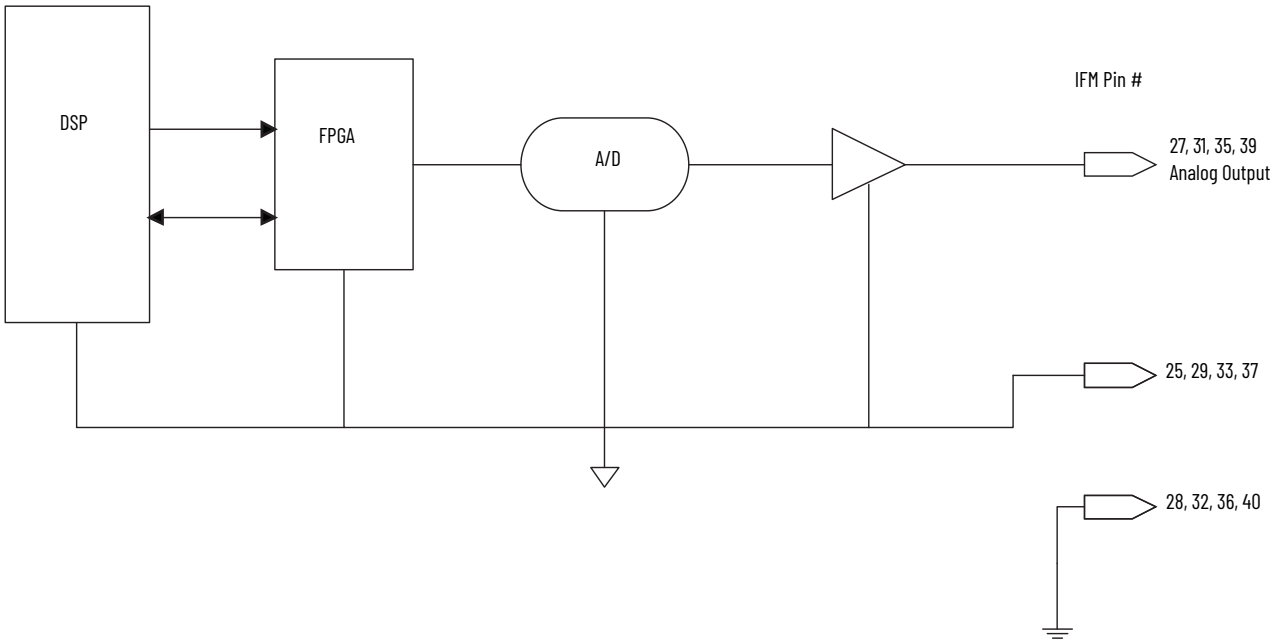

Auxiliary +24V Power Supply

An isolated 24V power supply is built into the DC/DC converter (connector P3). This supply may be used for any customer supplied equipment requiring up to 24 watts at +24V. This supply may also be used to power any custom drive options, such as isolation modules for additional process control outputs. The health of this power supply is monitored in the drive.

Pin Number	Description
1	ISOLATOR (+24V, 1A)
2	ISOL_COMM (com4)
3	EARTH

Analog Control Board Replacement

To replace the Analog Control Boards:

1. Isolate and lock out all power to the drive.
2. Remove the transparent sheet on top of the drive processor module and the drive processor module itself before removing the ACB. Remove the transparent sheet on top of the DPM by removing the 4 screws.
3. Use static strap before removing any connectors.
4. Remove the connectors J4, J11 and J12 on DPM after proper identification and marking if necessary. Use the electrical drawing as the reference. Remove the 4 screws holding it on the standoffs above the ACB.
5. Remove the DPM mounted on the four, 34-pin connectors.
6. Remove the screws holding encoder interface board and gently remove the board mounted on the 8 pin connector
7. Remove the connectors J1, J2, J3, J4, J5, J6, J7,J8, J9, J10, J12, J13, J14, J16, J22, J24, J25, J26, J27 on ACB after proper identification and marking if necessary. Use the electrical drawing as the reference.
8. Remove the ACB board by removing the 4 screws, and 6 standoffs screwed to support the DPM & encoder interface board.
9. Reverse steps 8 through step 2 to reinstall the boards into the low voltage control cabinet.
10. Apply low voltage power and complete both system and medium voltage tests to ensure the new board functions properly.

Encoder Feedback Board

Encoder Options

There are two positional encoder interface boards that may be used with the PowerFlex 7000 Forge Control. The encoder interface boards do not have any user accessible test points; however, buffered and isolated versions of each of the signals A+, A-, B+, B-, Z+, and Z- are available on the ACB at test points TP45-TP50.

Regardless of which type of encoder board, the following conditions should be adhered to:

1. Do not attach encoders with open collector outputs to the drive. Acceptable outputs are Analog Line Driver or Push Pull.
2. The drive will not operate properly if using single ended Quadrature encoders. Rockwell Automation recommends using differential inputs only for these types of encoders. Single ended outputs are only acceptable for Positional Encoders.

20B-ENC-1 & 20B-ENC-1-MX3 Encoder Interface

This encoder interface enables connecting the drive to a standard Quadrature Encoder. The 20B-ENC encoder interface provides three optically isolated differential encoder inputs for A and B phases as well as a Z track. You cannot configure these inputs for use with a single ended encoder. The board only supports differential encoders. The board also provides a galvanically isolated 12V/3 W supply to power the attached encoder. You can configure the 20B-ENC-1 Encoder interface for 5V operation, however Rockwell Automation recommends operation at 12V.

Figure 150 - Encoder Interface (20B-ENC-1 and 20B-ENC-1-MX3)

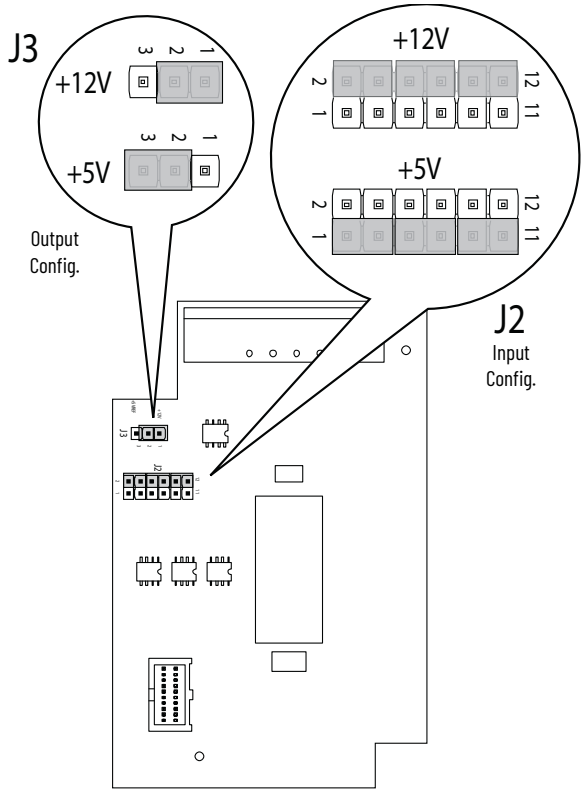

NOTE: Must be configured for 12V operation

Operation at +5V does not allow for long cable lengths. The reason for this is that it requires the power to be regulated within 5% at the encoder. Due to the resistance and capacitance of the cable it would be very hard to keep the power regulated at the encoder to 4.75V. With longer runs of cable this could drop below the 4.75V and the encoder would not operate properly. As a general rule, using 18Avg cabling with an Rdc of 19.3 Ω/km, the longest cable distance from the board to the encoder is limited to 12 m (42 ft).

The 20B-ENC-1-MX3 encoder option is functionally identical to the 20B-ENC-1 encoder with the addition of conformal coating. Figure 150 shows the recommended jumper positions for use with the PowerFlex 7000L Drive.

Input Connections:

All encoder interface Connections are made to J1. The connections are as follows:

- J1 Pin 1 A+
- J1 Pin 2 A
- J1 Pin 3 B+
- J1 Pin 4 B
- J1 Pin 5 Z+
- J1 Pin 6 Z
- J1 Pin 7 Encoder Power Return
- J1 Pin 8 Encoder Power (+12V @ 3 Watts)

80190-759-01, 80190-759-02 Universal Encoder Interface

The Universal Encoder Interface enables connections between the drive and to an absolute position encoder or a standard quadrature encoder, providing the option for dual or redundant quadrature encoders. The Universal Encoder Interface provides 12 single ended or 6 differential, optically isolated inputs as well as a 12V/3 Watt galvanically isolated encoder power source.

When using absolute encoders, use the 12 single-ended inputs. For quadrature encoders, use the 6 differential inputs.

Either encoder with frequencies up to 200 kHz connects to the Universal Encoder Interface.

The 80190-759-02 Universal Encoder Interface is functionally identical to the 80190-759-01 with the addition of conformal coating. The Universal Encoder interface is configured via jumpers installed on the 12-position header J4. The header has three positions labeled 'Park' and used to store the jumpers when indicated as "Removed" in the table below. Each function is selected by moving its corresponding jumper from the 'park' location to the selected function location if labeled "Installed". The following table describes the functions available.

ATTENTION: Removing the Universal Encoder Interface while control power is applied may result in damage to the board. Only remove the board when the control power is off.

Table 12 - Encoder Configurations

ENC_TYPE	POL_QRDNT	CD_DQUAD	Configuration
Installed	Installed	Installed	Single Quadrature Encoder Option (Factory Default)
Installed	Installed	Removed	Dual Quadrature Encoder Option without Redundancy
Installed	Removed	Removed	Dual Quadrature Encoder Option with Redundancy
Installed	Removed	Installed	Single Quadrature Option (CDSEL/DQUAD) must be removed for Redundancy
Removed	Installed	Installed	Gray Code Absolute Encoder Low True
Removed	Installed	Removed	Natural Binary Absolute Encoder Low True
Removed	Removed	Installed	Gray Code Absolute Encoder High True
Removed	Removed	Removed	Natural Binary Absolute Encoder High True

Figure 151 - Universal Encoder Board

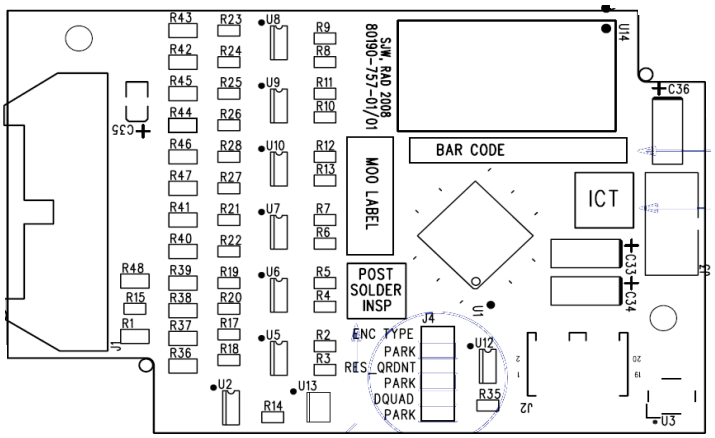

Connections to the Universal Encoder Interface are made via a 1492-IFM20F interface module. The connections to the IFM are detailed below.

Table 13 - Encoder Functions

IFM Pin #	Quadrature Encoder Function	Absolute Encoder Function
1	A1+	E0
2	A1-	E1
3	B1+	E2
4	B1-	E3
5	ENC_COM	ENC_COM
6	Z1+	E4
7	Z1-	E5
8	A2+ (Redundant or Dual ENC)	E6
9	A2- (Redundant or Dual ENC)	E7
10	ENC_COM	ENC_COM
11	B2+ (Redundant or Dual ENC)	E8
12	B2- (Redundant or Dual ENC)	E9
13	Z2+ (Redundant or Dual ENC)	E10
14	Z2- (Redundant or Dual ENC)	E11
15	ENC_COM	ENC_COM
16	ENC_COM	ENC_COM
17	ENC_COM	ENC_COM
18	ENC PWR (+12V)	ENC PWR (+12V)
19	ENC PWR (+12V)	ENC PWR (+12V)
20	ENC PWR (+12V)	ENC PWR (+12V)

Figure 152 - 20-pin Interface Module (IFM)

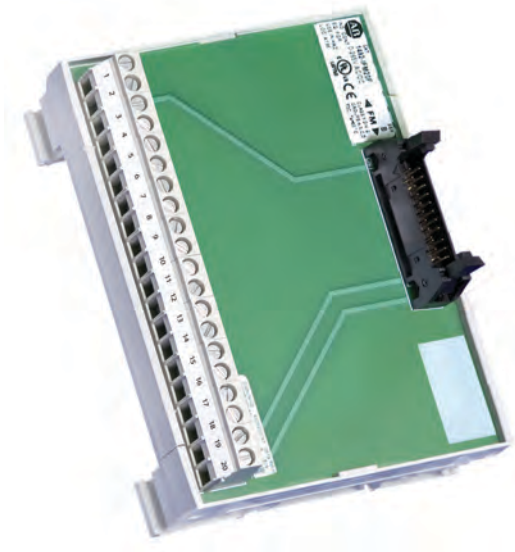

Quadrature Encoder Operation

The Universal Encoder Interface accepts either single or dual quadrature encoders. Configure the board to accept the encoders through jumpers on J4.

Boards shipped from the factory come default to single quadrature encoder configuration. For dual encoder configurations, the primary encoder wires to pins 1…7 on the 1492-IFM20 module.

To select the dual encoder option, remove the CD_QUAD jumper and place it in PARK. This configures the board to accept two individual quadrature encoders. In this mode, the drive can switch between encoders for applications such as Synchronous Transfer between two motors with each having their own encoder.

For the redundant encoder option, remove both the CD_QUAD and POL_QRDNT jumpers and place them in PARK. With this configuration, the drive will switch over to the redundant encoder when it detects a problem with the primary encoder.

IMPORTANT Consult the factory for availability of dual Quadrature Encoder options.

When the drive switches over to the redundant encoder, it cannot switch back without recycling control power.

Positional Encoder Operations

Besides quadrature encoders, the Universal Encoder Interface also accepts positional (absolute) encoders. The Interface converts parallel positional data to a serial stream and transmits it to the DPM. The board also generates “pseudo” quadrature differential signals, including a zero position mark, derived from the binary data to the DPM.

IMPORTANT Consult the factory for availability of Positional Encoder options.

There are three different positional encoder configurations available. For all of these configurations remove the ENC_TYPE jumper. The other jumpers configure the board for the type of positional data (Gray Code or Natural Binary) set by CD_DQUAD and High or Low True data set by POL_QRDNT.

1. Gray code, Low True. In this configuration the board inverts the incoming gray code data then converts it to binary for transmission to the DPM.
2. Natural Binary, Low True. The board does not convert incoming data but does invert it.
3. Gray code, High True. The board converts incoming gray code data to binary without inverting the input data.
4. Natural Binary, High True. The board converts positional data to the serial stream without inverting or converting it.

Positional Encoder Guidelines

When selecting a positional encoder, follow these guidelines for optimal performance.

1. Code Selection: Purchase absolute encoders with either Gray code or Binary output format. Gray code is a form of binary code where only a single bit changes at a time for each sequential number or position. The fact that only a single bit changes at a time make it easier for the Universal Encoder Interface to read valid positional data and not ambiguous data. If we compare the Natural Binary code to Gray code for the transition from 255 to 2556, we see:

	Binary Code	Gray Code
255	011111111	010000000
256	100000000	110000000

   All nine bits changed in the Binary Code while only the MSB of the Gray code changed. In the Universal Encoder Interface the frequency filter components and input hysteresis create delays. Differences in these delays could cause errors due to reading a bit as ON when switching to OFF or vice versa. In the case of Gray code, since only one bit ever changes, the ambiguity error is never more than one count. For this reason, and to reduce inrush currents, Rockwell Automation recommends using Gray code Positional Encoders.

2. **Data Polarity**: Absolute encoders typically have a High True output. If the encoder model does not have a High/True (or Non Inverted/Inverted) option you should assume it to be High True. In the case of a 10bit High True encoder the zero position is represented by 0000000000. Whereas a Low/True encoder the zero position is 1111111111. On the Universal Encoder Interface the position data is inverted in hardware. That is a “1” will turn on an optocoupler producing a “0”. Therefore a High True encoder would produce 1111111111 for the zero position. With the POL_QRDNT jumper you can control the polarity of the input. With the jumper installed (factory default) it is setup to accept High True encoders and an extra inversion is done in the Universal Encoder Interface. If you are using a Low True encoder then this jumper needs to be removed so that the zero position is inverted by the optocouplers alone.

   The other role of the POL_QRDNT jumper is to correct the data in the event the encoder was mounted so that a CCW rotation produced decrementing counts. If this is the case the POL_QRDNT jumper should be configured to the opposite of what it should normally be for the data polarity. For example if the Universal Encoder Interface is configured to operate with High True encoders (POL_QRDNT installed), remove it to correct for encoder mounting.

External Input/Output Boards

The External Input/Output (XIO) Boards connect through a network cable (CAN Link) to the Analog Control Board (ACB). You can connect this cable to either XIO Link A (J4) or XIO Link B (J5). The XIO board handles all external Digital Input and Output signals and sends them to the ACB through the cable. There are 16 Isolated Inputs and 16 Isolated Outputs on the card, used for Runtime I/O including Start, Stop, Run, Fault, Warning, Jog, and External Reset signals. The boards also handle the standard drive fault signals and several spare configurable fault inputs. There is a software option to assign each XIO a specific function (General IO, External IO, or Liquid Cooling).

Figure 153 - XIO Board

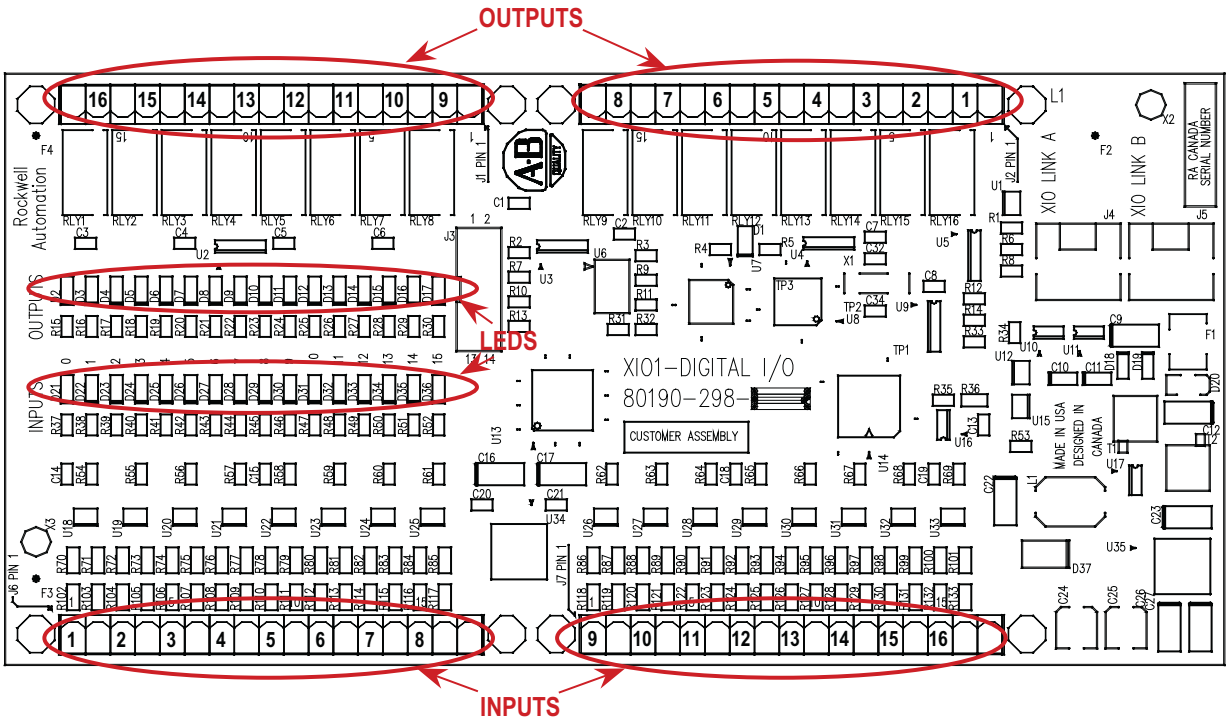

The standard drive comes with one XIO board; additional boards (up to 5) can be daisy chained together from XIO Link B (J5) on the first board to XIO Link A (J4) on the second board, for a total of 6 XIO cards. However, at this time the drive only supports the use of addresses 1 to 3, depending on the drive's features and application. U6 on the XIO board displays the board's address which is automatically calculated from the XIO board's position in the network.

XIO Link A and B ports are interchangeable but it may make wiring easier to follow if you use Link A for "upstream" (closest to the ACB), and Link B for "downstream" (farthest from the ACB).

LED D1 and display U6 indicate the status of the board. The following table illustrates the possible states for D1.

LED Status	Description
Solid Green	Normal Operation
Solid Red	Board Failure
Alternate Flashing of Red and Green	No Communication Available to ACB board (Normal at Power on, during firmware download and with unprogrammed drive)

Table 14 - Status of U6 Display

Display	Description	Explanation
–	No valid address found	• More than 6 XIO cards on network • IO cable failure • IO card failure • CB failure
0	Card in "Master" mode	• Rockwell Automation Use Only • Remove connection to J3 and recycle power
1 – 6	Valid address	• Normal
Decimal point ON	Indicates network activity	• Normal
Decimal point OFF	No activity on the network	• Normal at Power on, during firmware download and with unprogrammed drive

External Input/Output Board Replacement

To replace the External Input/Output Boards:

1. Disconnect and lock out all medium voltage and control voltage power to the drive.
2. Mark the location and orientation of all the plugs, cables, and connectors into the XIO board. Use the electrical drawing as a reference.
3. Ground your static strap, and disconnect all of the power connections.
4. Remove the XIO board assembly from the low voltage control cabinet. The XIO board mounts on a DIN rail, so a special 3-piece assembly secures the board. The assembly does not come with the new board, so you must remove the old board from the assembly and install the new board in its place.
5. Install the new XIO board assembly in the low voltage control cabinet.
6. Reconnect all connections and verify the locations.
7. Apply low voltage power and complete both system and medium voltage tests to ensure the new board functions properly.

Optical Interface Boards (OIB)

The Optical Interface Boards are the interface between the DPM and the Gate Driver circuitry. The drive control decides which device to fire, and signals the OIB boards. The OIB board converts that electrical signal to an optical signal that it transmits via fiber optics to the gate driver cards. Typically, the transmit ports are gray and the receive ports are blue. The gate driver accepts that signal and turns the device on and off accordingly. The diagnostic fiber optic signals work the same way, but the source is the gate driver boards and the destination is the drive control boards. Each OIB contains one extra fiber optic receiver (RX7), which is used for temperature measurement.

Figure 154 - Optical Interface Board

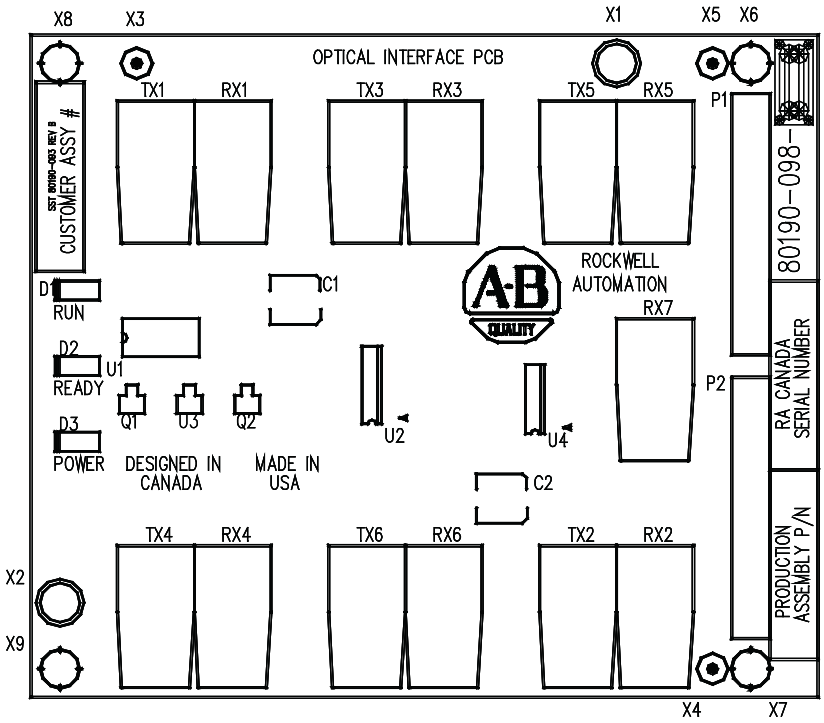

The OIB boards mount directly onto the Optical Interface Base Board (OIBB) using two parallel 14-pin connectors for the electrical connection, and plastic clips to provide the mechanical strength. There is one OIBB for the inverter, and one OIBB for the rectifier device. The OIBBs interface to the DPM using two ribbon cables to connect to J11 and J12.

Each OIB board can handle the firing and diagnostic duplex fiber optic connector for six devices, whether they are SCRs or SGCTs. Physically, on the OIBBs, there is provision for 18 devices for the inverter and the rectifier. The top OIB board on the OIBB is for the 'A' devices, the middle OIB board on the OIBB is for the 'B' devices, and the bottom OIB board on the OIBB is for the 'C' devices. Test points for the OIB gating diagnostic and temperature feedback signals are on the OIBB.

Each OIB board also has input RX7 for a signal from a Temperature Feedback Board. The quantity and location of thermistor connections is dependent on the drive configuration. Typically there is one temperature sensor from the line converter and one temperature sensor from the machine converter, each going into the respective OIB board in the 'A' position. However some drive configurations only require one thermistor feedback connection. The temperature feedback connection on OIBC is not implemented on the OIBB and is never used. For more information, see the drawings supplied with your drive. The alarm and trip set points for each of these signals are programmable in software.

There are three LEDs on the OIB board, and the following table illustrates the status and description for the LED states.

LED	Status	Description
D1	Red – On	Run – The OIB has received an Enable signal. The drive control software is in control of all gating.
D2	Yellow – On	Ready – The OIB power supply is sufficient for proper operation.
D3	Green – On	Power – The OIB has received a voltage signal greater than 2V.

Optical Interface Board Replacement

IMPORTANT If the drive is equipped with the Safe Torque Off option, the drive will use OIB2 boards. See publication 7000-UM203 to replace the OIB2 boards.

1. Isolate and lock out all power to the drive.
2. Mark the location and orientation of all the fiber optic cables. Use the electrical drawing for reference.
3. Ground your static strap, and disconnect all of the connections. You may need to remove the 60 core cable connectors on the Optical interface base and the ground connection for access to the standoffs
4. Remove the OIB board from the OIBB. There are four standoffs that snap into place on the OIB, and they need to be carefully handled when disconnecting the boards. There is also the 28-pin connection between the boards, and this connection should be handled carefully as you do not want to bend the pins.
5. Install the new OIB on the OIBB. Ensure the standoffs snap into place.
6. Reconnect all fiber optic connections and verify the locations.
7. Apply low voltage power and complete gating, system, and medium voltage tests to confirm board performance.

Figure 155 - OIB Replacement (Mounting Plate Accessible)

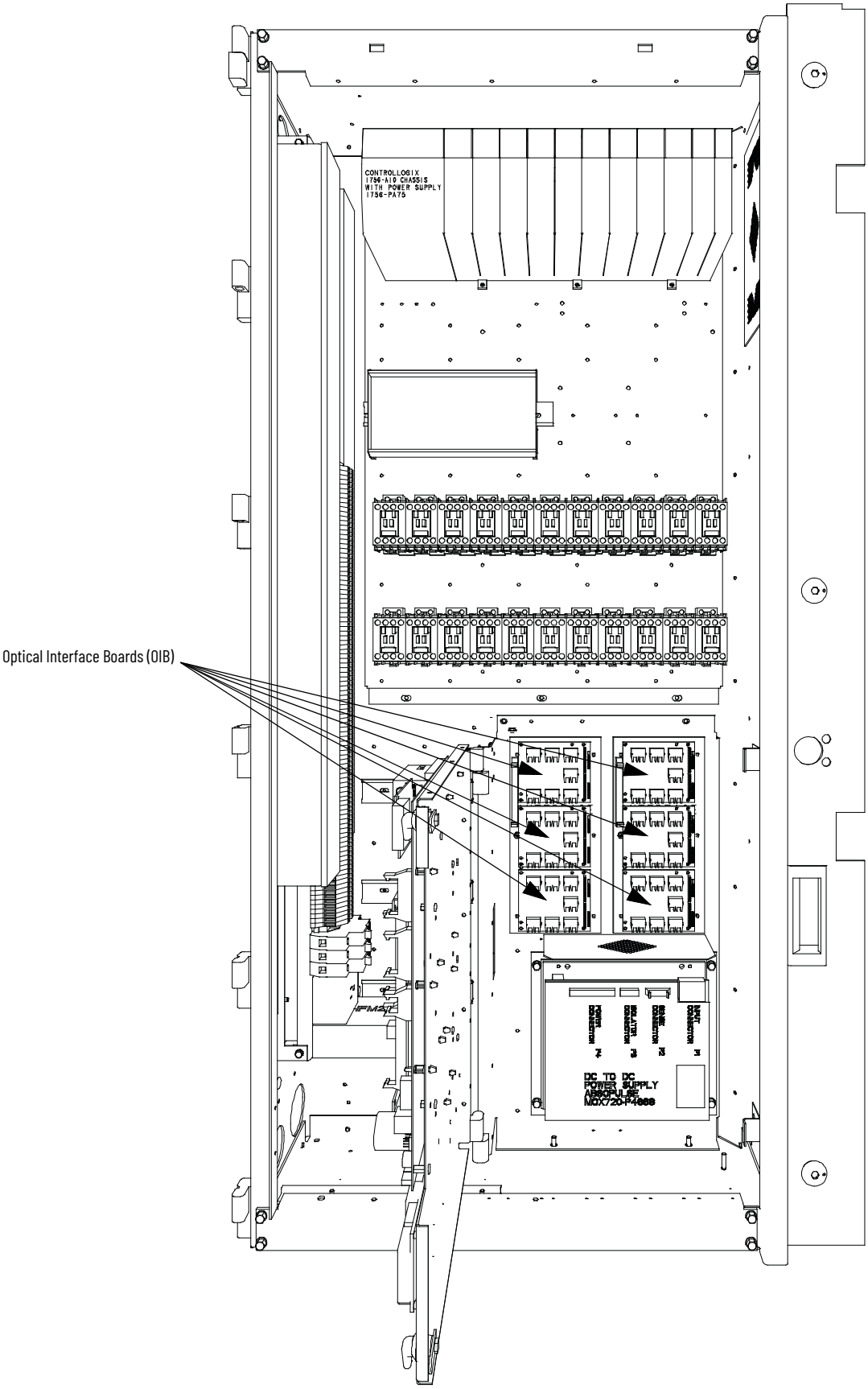

Optical Interface Base Board (OIBB)

This board provides the mechanical and electrical interconnections between the OIBs and the DPM. It connects to either J11 or J12 on the DPM via a 60 conductor shielded ribbon cable. Attach the cable's drain wire to the screw terminal J8. The remaining connectors on the board complete the electrical connection of the installed OIBs to the DPM. Each OIB can support from one to three OIBs.

Figure 156 - Optical Interface Base Board (OIBB)

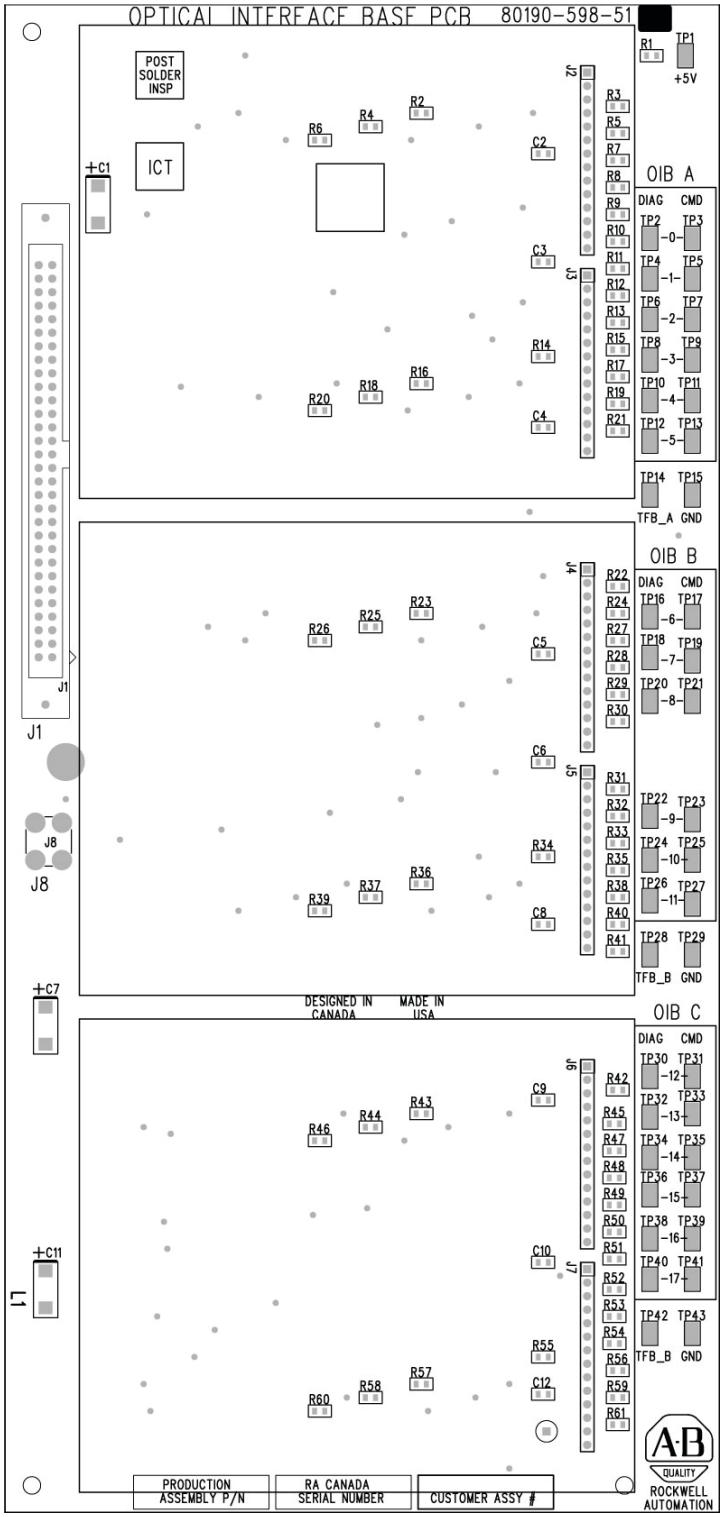

Replace the Optical Interface Base Board

IMPORTANT If the drive is equipped with the Safe Torque Off option, the drive will use OIBBS boards. See publication 7000-UM203 to replace the OIBBS.

1. Isolate and lock out all power to the drive.

IMPORTANT Use a static strap when performing this procedure.

2. If the OIB boards are also being replaced, note and mark the location and orientation of all fiber optic cables.
3. Remove the OIB boards from the OIBB. There are four standoffs that are secured in place on the OIB boards. There is also the 28-pin connection between the boards, and this connection should be handled carefully. Do not bend the pins.
4. Remove the 60-pin cable connector on the OIBB and the ground connection.
5. Remove the ground nut holding in the OIBB. There are five standoffs that snap into place on the OIBB. They must be carefully handled when removing the boards.
6. Install the new OIBB and reinstall the ground nut.
7. Plug in the OIB boards and reconnect all the cables.

ATTENTION: Reconnect the fiber optic cables in their proper location. Use the electrical drawing for reference. Failure to do so may result in injury or damage to equipment.

Optical Interface Base Board Test Points

In addition to the command and diagnostic test points, there are three ground reference test points. These reference points are electrically identical, but their locations facilitate oscilloscope or chart recorder test leads connections.

Table 15 - Test Points on Optical Interface Base Board (OIBB)

Test Point	Signal Name	Description
TP1	+5V	Positive 5V Power Supply
TP2	DIAG_0	OIB A, RX1 Diagnostic Feedback
TP3	CMD_0	OIB A, TX1 Firing Command Signal
TP4	DIAG_1	OIB A, RX2 Diagnostic Feedback
TP5	CMD_1	OIB A, TX2 Firing Command Signal
TP6	DIAG_2	OIB A, RX3 Diagnostic Feedback
TP7	CMD_2	OIB A, TX3 Firing Command Signal
TP8	DIAG_3	OIB A, RX4 Diagnostic Feedback
TP9	CMD_3	OIB A, TX4 Firing Command Signal
TP10	DIAG_4	OIB A, RX5 Diagnostic Feedback
TP11	CMD_4	OIB A, TX5 Firing Command Signal
TP12	DIAG_5	OIB A, RX6 Diagnostic Feedback
TP13	CMD_5	OIB A, TX6 Firing Command Signal
TP14	TFB_A	OIB A Temperature Feedback Signal
TP15	GND	Ground Reference for TP1 – TP14
TP16	DIAG_6	OIB B, RX1 Diagnostic Feedback
TP17	CMD_6	OIB B, TX1 Firing Command Signal
TP18	DIAG_7	OIB B, RX2 Diagnostic Feedback
TP19	CMD_7	OIB B, TX2 Firing Command Signal
TP20	DIAG_8	OIB B, RX3 Diagnostic Feedback
TP21	CMD_8	OIB B, TX3 Firing Command Signal

Table 15 - Test Points on Optical Interface Base Board (OIBB) (Continued)

Test Point	Signal Name	Description
TP22	DIAG_9	OIB B, RX4 Diagnostic Feedback
TP23	CMD_9	OIB B, TX4 Firing Command Signal
TP24	DIAG_10	OIB B, RX5 Diagnostic Feedback
TP25	CMD_10	OIB B, TX5 Firing Command Signal
TP26	DIAG_11	OIB B, RX6 Diagnostic Feedback
TP27	CMD_11	OIB B, TX6 Firing Command Signal
TP28	TFB_B	OIB B Temperature Feedback Signal
TP29	GND	Ground Reference for TP16 – TP28
TP30	DIAG_12	OIB C, RX1 Diagnostic Feedback
TP31	CMD_12	OIB C, TX1 Firing Command Signal
TP32	DIAG_13	OIB C, RX2 Diagnostic Feedback
TP33	CMD_13	OIB C, TX2 Firing Command Signal
TP34	DIAG_14	OIB C, RX3 Diagnostic Feedback
TP35	CMD_14	OIB C, TX3 Firing Command Signal
TP36	DIAG_15	OIB C, RX4 Diagnostic Feedback
TP37	CMD_15	OIB C, TX4 Firing Command Signal
TP38	DIAG_16	OIB C, RX5 Diagnostic Feedback
TP39	CMD_16	OIB C, TX5 Firing Command Signal
TP40	DIAG_17	OIB C, RX6 Diagnostic Feedback
TP41	CMD_17	OIB C, TX6 Firing Command Signal
TP42	TFB_C	OIB C Temperature Feedback Signal – There is no provision in the drive for the use of this signal, it is only provided for Rockwell internal testing.
TP43	GND	Ground Reference for TP30 – TP42

Preventative Maintenance Schedule

Preventive maintenance activities can be broken down into two categories:

- **Operational Maintenance** – can be completed while the drive is running.
- **Annual Maintenance** – should be completed during scheduled downtime.

Refer to Tool / Parts / Information Requirements on page 189 at the end of this section for a list of documentation and materials needed to properly complete the preventive maintenance documents.

Operational Maintenance

The drive uses a mixture of deionized water and Glycol to cool down the devices. One of the desired qualities of this mixture is the low conductivity; a second is the low freezing point. The latter is required in climates where the temperature can drop below 0 °C. The maintenance on the system can be done with the drive running by closing valve # V8 and V9. They must be re-opened when the changes are done.

The maintenance includes the following tasks:

- **Changing the DI cartridge** – The DI cartridge keeps the conductivity low by removing positive ions from the DI water/glycol solution. It needs to be changed whenever the conductivity warning appears. This occurs when the conductivity increase above 1µS. **The DI cartridge cannot be cleaned, it must be replaced.**
- **Changing or cleaning the mesh filters** – The DI Cartridge require clean DI water/Glycol solution to prevent damage. There are two Mesh filters, one before and one after the DI Cartridge. These should be changed or cleaned whenever they become dirty or the DI Cartridge is changed. The loose particles on the outside Mesh Filter can be removed by opening the tap on the bottom of the clear plastic container. The loose particle and the liquid should be collected in a small container and then discarded. The filter can then be removed and cleaned or changed. When the Mesh Filters are cleaned/changed, they should be thoroughly checked for damage before they are re-installed.
- **Maintenance of the water pumps** – The two water pumps should be greased and checked for leaks whenever preventive maintenance is scheduled or every 3 months which ever comes first.
- **Check coolant levels in the reservoir** – The level of coolant should be measured or marked on the side reservoir. Masking tape placed vertically on the side of the reservoir can be marked with a pen or pencils for future level references.

  The coolant level will go down due to evaporation. Significant change in coolant levels could be sign of leak in the drive or heat exchanger and should be checked thoroughly.

Percentage of Glycol in coolant should also be checked periodically. Since Water will evaporate faster than Glycol, the percentage could change as the liquid evaporates. The heat transfer quality changes as the percentages changes. A correct Glycol content should be maintained to balance the heat transfer quality and freezing point of the liquid.

- **Maintenance of the heat exchanger** – The liquid to air exchangers have fans, chiller fins, and tubing. They should be checked for debris and cleaned periodically. Make sure all inspection opening cover plates are re installed after inspection.

Annual Maintenance

These maintenance tasks should be performed on an annual basis. These are recommended tasks, and depending on the installation conditions and operating conditions, you may find that the interval can be lengthened. For example, we do not expect that torqued power connections will require tightening every year. Due to the critical nature of the applications run on MV drives, the key word is preventive. Investing approximately 8.0 hr/yr on these tasks is time well spent in adding insurance against unexpected downtime.

Initial Information Gathering

Some of the important information to be recorded includes:

- Print Drive Setup
- Print Fault/Warning Queues
- Save Parameters to NVRAM
- Save Parameters to Operator Interface
- Circuit Board Part Numbers / Serial Numbers / Revision Letters[(a)]

WARNING: To prevent electrical shock, ensure the main power has been disconnected before working on the drive. Verify that all circuits are voltage free using a hot stick or appropriate voltage-measuring device. Failure to do so may result in injury or death.

Physical Checks (NO Medium Voltage and NO Control Power)

1. **Power Connection Inspection**
   - Inspect PowerFlex® 7000L drive, input/output/bypass contactor sections, and all associated drive components for loose power cable connections and ground cable connections: torque them to the required torque specifications.
   - Inspect the bus bars and check for any signs of overheating / discoloration and tighten the bus connections to the required torque specifications.
   - Clean all cables and bus bars that exhibit dust build-up.
   - Use torque sealer on all connections.
2. Carry out the integrity checks on the signal ground and safety grounds.
3. Check for any visual/physical evidence of damage and/or degradation of components in the low voltage compartments.
   - This includes relays, contactors, timers, terminal connectors, circuit breakers, ribbon cables, control wires; causes could be corrosion, excessive temperature, or contamination.
   - Clean all contaminated components using a vacuum cleaner (DO NOT use a blower), and wipe clean components where appropriate.

(a) This only needs to recorded if parts have been modified/changed since the last PM activities.

4. **Check for any visual/physical evidence of damage and/or degradation of components in the medium voltage compartments (for example, inverter/rectifier, cabling, DC Link, contactor, load break, harmonic filter).**
   - This includes main cooling fan, power devices, heatsinks, circuit boards, insulators, cables, capacitors, resistors, current transformers, potential transformers, fuses, wiring; causes could be corrosion, excessive temperature, or contamination.
   - Verify that torque on heatsink bolts (electrical connections to bullet assemblies) is within specifications (13.5 N•m).
   - Clean all contaminated components using a vacuum cleaner (DO NOT use a blower), and wipe clean components where appropriate.
5. **Carry out the physical inspection and verification for the proper operation of the contactor/isolator interlocks, and door interlocks.**
   - Carry out the physical inspection and verification for the proper operation of the key interlocks.
   - Physical verification of the additional cooling fans mounted in the AC line reactor cabinet, harmonic filter cabinet for mounting and connections.
   - Carry out the cleaning of the fans and ensure that the ventilation passages are not blocked and the impellers are freely rotating without any obstruction.
   - Carry out the insulation resistance testing of the drive, motor, isolation transformer/line reactor, and the associated cabling.
   - Refer to Insulation Resistance Test on page 215.
   - Check clamp head indicator washers for proper clamp pressure, and adjust as necessary.
   - See Checking Clamping Pressure on page 101 for details on proper clamp pressure.

Control Power Checks (No Medium Voltage)

1. Apply 3-phase control power to the PowerFlex 7000L drive, and test power to all of the vacuum contactors (input, output, and bypass) in the system, verifying all contactors can close and seal in.
   - Refer to Publication 1502-UM050 for a detailed description of all contactor maintenance
2. Verify all single-phase cooling fans for operation.
   - This includes the cooling fans in the AC/DC Power supplies and the DC/DC converter.
3. Verify the proper voltage levels at the CPT (if installed), AC/DC Power Supplies, DC/DC converter, isolated gate power supply boards.
4. Verify the proper gate pulse patterns using Gate Test Operating Mode.
5. If there have been any changes to the system during the outage, place the drive in System Test Operating Mode and verify all functional changes.

Final Power Checks before Restarting

1. Ensure all cabinets are cleared of tools, and all component connections are back in place and in the running state.
2. Put all equipment in the normal operating mode, and apply medium voltage.
3. If there were any input or output cables removed, verify the input phasing, and bump the motor for rotation.
4. If there were any changes to the motor, input transformer, or associated cabling, you will have to retune the drive to the new configuration using Autotuning.
5. Save all parameter changes (if any) to NVRAM.
6. Run the application up to full speed/full load, or to customer satisfaction.
7. Capture the drive variables while running, in the highest access level if possible.

Additional Tasks During Preventive Maintenance

1. Investigation of customer's concerns relating to drive performance
   - Relate any problems found during above procedures to customer issues.
2. Informal instruction on drive operation and maintenance for plant maintenance personnel
   - Reminder of safety practices and interlocks on MV equipment, and on specific operating concerns
   - Reminder of the need to properly identify operating conditions
3. Recommendation for critical spare parts which should be stocked in-plant to reduce production downtime
   - Gather information on all spare parts on site, and compare that with factory-recommended critical spares to evaluate whether levels are sufficient.
   - Contact MV Spare Parts group for more information.
4. Vacuum Bottle Integrity Testing using a Vacuum Checker or AC Hipot
   - See Publications 1502-UM050 (Series D) and 1502-UM052 (Series E) for a detailed description of all 400A contactor maintenance.

Final Reporting

1. A complete, detailed report on all steps in the Preventive Maintenance procedures should be recorded to identify changes.
   - A completed copy of this checklist should be included.
   - A detailed description of all adjustments and measurements that were taken during the process should be included in an addendum (for example, interlock adjustments, loose connections, voltage readings, insulation resistance results, parameters).
2. This information should be communicated to MV Product Support so future support activities have the latest site information available.
   - This can be faxed to (519) 740-4756 or e-mailed to MVSupport_Technical@ra.rockwell.com.

Time Estimations

Operational Maintenance	0.5 hours per filter
Annual Maintenance	
• Initial Information Gathering	0.5 hours
• Physical Checks	
– Torque Checks	2.0 hours
– Inspection	2.0 hours
– Cleaning(1)	2.5 hours(1)
– Insulation Resistance Test	1.5 hours
• Control Power Checks	
– Contactor Adjustments(1)	2.0 hours(1)
– Voltage Level Checks	1.0 hour
– Firing Check	0.5 hours
– System Test(1)	2.0 hours(1)
• Medium Voltage Checks	
– Final Inspection	0.5 hours
– Phasing Check(1)	1.5 hours(1)
– Autotuning(1)	2.0 hours(1)
– Operation to Maximum Load	Site Dependent
• Additional Tasks(1)	
– Investigation	Varies with nature of Problem
– Informal Training/Refresher	2.0 hours
– Spare Parts Analysis	1.0 hour
– Vacuum Bottle Integrity Check	3.0 hours
• Final Report	3.0 hours

(1) Time liquid-cooledmay not be required depending on the nature of the maintenance and the condition of the drive system. These times are only estimations.

Tool / Parts / Information Requirements

The following is a list of the tools recommended for proper maintenance of the PowerFlex 7000L drives. Not all of the tools may be required for a specific drive preventive procedure, but if we were to complete all of the tasks listed above the following tools would be required.

Tools

- 100 MHz Oscilloscope with minimum 2 Channels and memory
- 5kV DC Insulation Resistance Test Device
- Digital Multimeter
- Torque Wrench
- Laptop Computer with Relevant Software and Cables
- Assorted Hand Tools (Screwdrivers, Open Ended Metric Wrenches, Metric Sockets)
- 8 mm Allen Keys
- Speed Wrench
- Feeler Gauge
- Vacuum Bottle Checker or AC-Hipot
- Minimum of 7.5 kV Hotstick / Potential Indicator
- Minimum of 10 kV Safety Gloves
- Vacuum Cleaner with Anti-static Hose

- Anti-static Cleaning Cloth
- No. 30 Torx Driver

Documentation

- PowerFlex Technical Data (Parameters, Troubleshooting) – Publication 7000-TD002
- PowerFlex MV Drives Transportation and Handling Procedures – Publication 7000-IN008
- MV 400A Vacuum Contactor, Series D User Manual – Publication 1502-UM050
- MV 400A Vacuum Contactor, Series E User Manual – Publication 1502-UM052
- Operator Interface Guide: HMI Offering with Enhanced Functionality Publication 7000-UM201
- Drive-Specific Electrical and Mechanical Prints
- Drive-Specific Spare Parts List

Materials

- Torque Sealer (Yellow) Part number — RU6048
- Electrical Joint Compound EJC no. 2 or approved equivalent (for Power Devices)
- Aeroshell no. 7 Part number 40025-198-01 (for Vacuum Contactors)

PowerFlex 7000L Maintenance Schedule

Rockwell Automation recognizes that following a defined maintenance schedule will deliver the maximum product availability. By rigorously following this maintenance schedule, you can expect the highest possible uptime. This Annual Preventative Maintenance Program includes a visual inspection of:

- all drive components visible from the front of the unit
- resistance checks on the power components
- power supply voltage level checks
- general cleaning and maintenance
- checking of all accessible power connections for tightness, and other tasks.

I – Inspection	This indicates that the component should be inspected for signs of excessive accumulation of dust, dust or external damage (for example, looking at Filter Capacitors for bulges in the case, or inspecting the heatsinks for debris clogging the air flow path).
M – Maintenance	This indicates a maintenance task that is outside the normal preventative maintenance tasks, and can include the inductance testing of Line Reactors/DC Links, or the full testing of an isolation transformer.
R – Replacement	This indicates that the component has reached its mean operational life, and should be replaced to decrease the chance of component failure. It is very likely that components will exceed the design life in the drive, and that is dependent on many factors such as usage, heating and so on.
C – Cleaning	This indicates the cleaning of a part that can be reused, and refers specifically to the door-mounted air filters in the liquid-cooled drives and some air-cooled drives.
Rv – Review	This refers to a discussion with Rockwell Automation to determine whether any of the enhancements/changes made to the Drive Hardware and Control would be valuable to the application.
RFB/R – Refurbishment/Replacement	The parts can be refurbished at lower cost OR the parts can be replaced with new ones.

Table 16 - PowerFlex 7000 Drive Preventative Maintenance Schedule (Years 0...10)

Period Interval (Years)		0	1	2	3	4	5	6	7	8	9	10
Liquid-Cooling System	Mesh Filters(1)	C	C	C	C	C	C	C	C	C	C	C
	De-ionizing Filter Cartridge(1)	R	R	R	R	R	R	R	R	R	R	R
	All Fittings/Connections/Hose Clamps		I	I	I	I	I	I	I	I	I	I
	Cooling Pump/Motors		I	I	I	I	I	I	I	I	I	I
	Cooling Pump Seals		I	R	I	R	I	R	I	R	I	R
	Thermostatic Valve Element		I	I	I	I	I	I	R	I	I	I
Auxiliary Cooling System	Door Mounted Air Filters(1)(2)	C/R	C/R	C/R	C/R	C/R	C/R	C/R	C/R	C/R	C/R	C/R
	Small Aux. Cooling Fans "Caravel"		I	I	I	I	R	I	I	I	I	R
Power Switching Components	Power Devices (SGCTs/SCRs)		I	I	I	I	I	I	I	I	I	I
	Snubber Resistors/Sharing Resistors/HECS		I	I	I	I	I	I	I	I	I	I
	Rectifier Snubber Capacitors(3)(4)		I	I	I	I/R (4)	I	I	I	I/R(4)	I	Rv/R(4)
	Inverter Snubber Capacitors(5)(6)		I	I	I	I	I	I	I	I	I	R
	Integrated Gate Driver Power Supply		I	I	I	I	RFB/R	I	I	I	I	RFB/R
	Self-Powered SCR Power Supply (SCR SPGDB)		I	I	I	I	RFB/R	I	I	I	I	RFB/R
Integral Magnetics/ Power Filters	Isolation Transformer/Line Reactor		I	I	I	I	M	I	I	I	I	M
	DC Link/CMC		I	I	I	I	M	I	I	I	I	M
	Line/Motor Filter Capacitors		I	I	I	I	M	I	I	I	I	M
Control Cabinet Components	AC/DC and DC/DC Power Supplies		I	I	I	I	RFB/R	I	I	I	I	RFB/R
	Control Boards		I	I	I	I	I	I	I	I	I	I
	Batteries (DPM)		I	I	R	I	I	R	I	I	R	I
	Battery Module (UPS)(7)		I	I	I	I	R	I	I	I	I	R
Connections	Low Voltage Terminal Connections/ Plug-in Connections		I	I	I	I	I	I	I	I	I	I
	Medium Voltage Connections		I	I	I	I	I	I	I	I	I	I
	Chillblock Bolted Connections		I	I	I	I	I	I	I	I	I	I
	Medium Voltage Connections (Rectifier)(3)		–	–	–	I(3)	–	–	–	I(3)	–	I(3)
	Medium Voltage Connections (Inverter)(5)		–	–	–	–	–	–	–	–	–	I
Enhancements	Firmware		–	–	Rv	–	–	Rv	–	–	Rv	–
	Hardware		–	–	Rv	–	–	Rv	–	–	Rv	–
Operational Conditions	Parameters		I	I	Rv	I	I	Rv	I	I	Rv	I
	Variables		I	I	Rv	I	I	Rv	I	I	Rv	I
	Application Concerns		I	I	Rv	I	I	Rv	I	I	Rv	I
Spare Parts	Inventory/Needs		I	I	Rv	I	I	Rv	I	I	Rv	I

(1) These components may be serviced while the VFD is running.
(2) If filter supplied is not a washable type, replace filter. If filter supplied is a washable type, wash or replace (depending on state of filter).
(3) When rectifier snubber capacitors are replaced, the MV connections for the rectifier need to be inspected.
(4) A 4-year rectifier snubber capacitor replacement interval applied only to drives with 18-pulse rectifiers shipped before 2012 (rectifier snubber capacitors are blue). However, current enhanced replacement rectifier snubber capacitors extend this to a 10-year replacement interval (replacement rectifier snubber capacitors are black). A 10-year rectifier snubber capacitor replacement interval has always applied to drives with AFE rectifiers.
(5) When inverter snubber capacitors are replaced, the MV connections for the inverter need to be inspected.
(6) A 10-year inverter snubber capacitor replacement interval applies to all drive configurations.
(7) Replace UPS batteries annually for 50°C rated VFDs.

Table 17 - PowerFlex 7000 Drive Preventative Maintenance Schedule (Years 11...20)

Period Interval (Years)		11	12	13	14	15	16	17	18	19	20
Liquid-Cooling System	Mesh Filters[1]	C	C	C	C	C	C	C	C	C	C
	De-ionizing Filter Cartridge[1]	R	R	R	R	R	R	R	R	R	R
	All Fittings/Connections/Hose Clamps	I	I	I	I	I	I	I	I	I	I
	Cooling Pump/Motors	I	I	I	I	I	I	I	I	I	I
	Cooling Pump Seals	I	R	I	R	I	R	I	R	I	R
	Thermostatic Valve Element	I	I	I	R	I	I	I	I	I	I
Auxiliary Cooling System	Door Mounted Air Filters[1][2]	C/R	C/R	C/R	C/R	C/R	C/R	C/R	C/R	C/R	C/R
	Small Aux. Cooling Fans "Caravel"	I	I	I	I	R	I	I	I	I	I
Power Switching Components	Power Devices (SGCTs/SCRs)	I	R	I	I	I	I	I	I	I	I
	Snubber Resistors/Sharing Resistors/HECS	I	I	I	I	I	I	I	I	I	I
	Rectifier Snubber Capacitors[3][4]	I	I/R [4]	I	I	I	I/R[4]	I	I	I	I
	Inverter Snubber Capacitors[5][6]	I	I	I	I	I	I	I	I	I	I
	Integrated Gate Driver Power Supply	I	I	I	I	RFB/R	I	I	I	I	I
	Self-Powered SCR Power Supply (SCR SPGDB)	I	I	I	I	RFB/R	I	I	I	I	I
Integral Magnetics/ Power Filters	Isolation Transformer/Line Reactor	I	I	I	I	M	I	I	I	I	I
	DC Link/CMC	I	I	I	I	M	I	I	I	I	I
	Line/Motor Filter Capacitors	I	I	I	I	M	I	I	I	I	I
Control Cabinet Components	AC/DC and DC/DC Power Supplies	I	I	I	I	RFB/R	I	I	I	I	I
	Control Boards	I	I	I	I	I	I	I	I	I	I
	Batteries (DPM)	I	R	I	I	R	I	I	R	I	I
	Battery Module (UPS)[7]	I	I	I	I	R	I	I	I	I	I
Connections	Low Voltage Terminal Connections/ Plug-in Connections	I	I	I	I	I	I	I	I	I	I
	Medium Voltage Connections	I	I	I	I	I	I	I	I	I	I
	Chillblock Bolted Connections	I	I	I	I	I	I	I	I	I	I
	Medium Voltage Connections (Rectifier)[3]	–	I[3]	–	–	–	I[3]	–	–	–	–
	Medium Voltage Connections (Inverter)[5]	–	–	–	–	–	–	–	–	–	–
Enhancements	Firmware	–	Rv	–	–	Rv	–	–	Rv	–	–
	Hardware	–	Rv	–	–	Rv	–	–	Rv	–	–
Operational Conditions	Parameters	I	Rv	I	I	Rv	I	I	Rv	I	–
	Variables	I	Rv	I	I	Rv	I	I	Rv	I	–
	Application Concerns	I	Rv	I	I	Rv	I	I	Rv	I	–
Spare Parts	Inventory/Needs	I	Rv	I	I	Rv	I	I	Rv	I	–

(1) These components may be serviced while the VFD is running.
(2) If filter supplied is not a washable type, replace filter. If filter supplied is a washable type, wash or replace (depending on state of filter).
(3) When rectifier snubber capacitors are replaced, the MV connections for the rectifier need to be inspected.
(4) A 4-year rectifier snubber capacitor replacement interval applied only to drives with 18-pulse rectifiers shipped before 2012 (rectifier snubber capacitors are blue). However, current enhanced replacement rectifier snubber capacitors extend this to a 10-year replacement interval (replacement rectifier snubber capacitors are black). A 10-year rectifier snubber capacitor replacement interval has always applied to drives with AFE rectifiers.
(5) When inverter snubber capacitors are replaced, the MV connections for the inverter need to be inspected.
(6) A 10-year inverter snubber capacitor replacement interval applies to all drive configurations.
(7) Replace UPS batteries annually for 50°C rated VFDs.

General Notes

Maintenance of Medium Voltage Equipment

ATTENTION: The servicing of energized Medium-Voltage Motor Control Equipment can be hazardous. Severe injury or death can result from electrical shock, bump, or unintended actuation of controlled equipment. Recommended practice is to disconnect and lockout control equipment from power sources, and release stored energy, if present.

For countries following NEMA standards, refer to:

- National Fire Protection Association Standard No. NFPA70E, Part II and (as applicable).
- OSHA rules for Control of Hazardous Energy Sources (Lockout/Tagout).
- OSHA Electrical Safety Related Work Practices including:
- Procedural requirements for lockout-tagout.
- Appropriate work practices, personnel qualifications, and required training.
- Where it is not feasible to de-energize and lockout or tagout electric circuits and equipment before working on or near exposed circuit parts.
- For countries following IEC standards, refer to local codes and regulations.

Periodic Inspection

Medium voltage motor control equipment must be inspected periodically. Inspection intervals must be based on environmental and operating conditions and adjusted as indicated by experience. An initial inspection within 3 to 4 months after installation is suggested. See the following standards for general guidelines for setting-up a periodic maintenance program.

For countries following NEMA standards, refer to:

- National Electrical Manufacturers Association (NEMA) Standard
  - No. ICS 1.1 (Safety Guidelines for the Application, Installation, and Maintenance of Solid-Sate Control) for MV Drives.
  - ICS 1.3 (Preventive Maintenance of Industrial Control and Systems Equipment) for MV Controllers.

For countries following IEC standards, refer to:

- IEC 61800-5-1 Sec. 6.5 for MV Drives.
- IEC 60470 Sec. 10.
- IEC 62271-1 Sec. 10.4 for MV Controllers.

Contamination

If inspection reveals that dust, dirt, moisture, or other contamination has reached the control equipment, the cause must be mitigated. Contamination could indicate unsealed enclosure openings (conduit or other) or incorrect operating procedures. Replace any damaged or embrittled seals and repair or replace any other damaged or malfunctioning parts (for example, hinges, fasteners). Dirty, wet, or contaminated control devices must be replaced unless they can be cleaned effectively by vacuuming or wiping. Do not clean with compressed air. The compressed air can displace dirt, dust, or debris into other parts or equipment, or damage delicate parts.

High-voltage Testing

High-voltage insulation resistance (IR) or dielectric withstanding voltage (insulation resistance) tests must not be used to check solid-state control equipment. When insulation resistance testing electrical equipment such as transformers or motors, solid-state devices must be bypassed before performing the test. Even though no damage can be readily apparent after a insulation resistance test, the solid-state devices are degraded and repeated application of high voltage can lead to failure.

Maintenance after a Fault Condition

Opening of the short circuit protective device (such as fuses or circuit breakers) in a properly coordinated motor branch circuit indicates a fault condition in excess of operating overload. Such conditions can damage medium-voltage motor control equipment. Before power, is restored the fault condition must be corrected and any repairs or replacements must be made to the medium-voltage motor control equipment. See NEMA Standards Publication No. ICS-2, Part ICS2-302 for procedures. To maintain the integrity of the equipment, use only Allen-Bradley recommended replacement parts and devices. Verify that the parts are properly matched to the model, series, and revision level of the equipment. After maintenance or repair of the equipment, always test the control system for proper functioning under controlled conditions (that avoid hazards if a control malfunction). For additional information, see NEMA ICS 1.3, PREVENTIVE MAINTENANCE OF INDUSTRIAL CONTROL AND SYSTEMS EQUIPMENT. Published by the National Electrical Manufacturers Association, Also NFPA70B, ELECTRICAL EQUIPMENT MAINTENANCE, published by the National Fire Protection Association.

Part-specific Notes

Cooling-fans

Inspect fans that are used for forced air cooling. Replace any that have bent, chipped, or missing blades, or if the shaft does not turn freely. Apply power momentarily to check operation. If unit does not operate, check and replace wiring, fuse, or fan motor as appropriate. Clean or change air filters as recommended in the Users Manual.

Operating Mechanisms

Check for proper functioning and freedom from sticking or binding. Replace any broken, deformed or badly worn parts or assemblies according to the product User Manuals. Check for and securely tighten any loose fasteners. Lubricate, if specified in individual product instructions. Many devices are factory-lubricated. If lubrication during use or maintenance of these devices is needed, the procedure is specified in their individual product instructions or User Manual.

IMPORTANT	Allen-Bradley® magnetic starters, contactors, and relays are designed to operate without lubrication. Do not lubricate these devices, because oil or grease on the pole faces (the mating surfaces) of the operating magnet can cause the device to stick in the 'ON' mode.

Contacts

Check contacts for excessive wear and dirt accumulations. Vacuum or wipe contacts with a soft cloth if necessary to remove dirt. Discoloration and slight pitting do not harm Contacts. Do not file contacts, as dressing only shortens contact life. Do not use spray cleaners on contacts, as their residues on magnet pole faces or in operating mechanisms can cause sticking and can interfere with electrical continuity. Contacts must only be replaced after contact face material has become badly worn. To avoid misalignment and uneven contact pressure always replace contacts in complete sets.

Vacuum Contactors

Contacts of vacuum contactors are not visible, so contact wear must be checked indirectly. Vacuum bottles must be replaced when:

- The contactor wear indicator line shows need for replacement.
- The vacuum bottle integrity-tests show need for replacement.

Replace all vacuum bottles in the contactor simultaneously to avoid misalignment and uneven contact wear. If the vacuum battles do not require replacement, check and adjust over-travel to the value listed in the product user manual.

Power Cable and Control Wire Terminals

A loose connection in a power circuit can cause overheating that can lead to equipment malfunction or failure. A loose connection in a control circuit can cause control malfunctions. Loose bonding or grounding connections can increase hazards of electrical shock and contribute to electromagnetic interference (EMI). Check the tightness of all terminals and bus bar connections and tighten any loose connections. Replace any parts or wiring that is damaged by overheating, and any broken wires or the bonding straps. See the User Manual for torque values that are required for power cable and bus hardware connections.

Coils

If a coil exhibits evidence of overheating (cracked, melted or burned insulation), it must be replaced. In that event, check for and correct overvoltage or undervoltage conditions, which can cause coil failure. Be sure to clean any residue of melted coil insulation from other parts of the device or replace such parts.

Batteries

Replace batteries periodically as specified in product manual or if a battery shows signs of electrolyte leakage. Use tools to handle batteries that have leaked electrolyte; most electrolytes are corrosive and can cause burns. Dispose of the old battery in accordance with instructions that are supplied with the new battery or as specified in the product manual.

Pilot Lights

Replace any burned out lamps or damaged lenses. Do not use solvents or cleaning- agents on the lenses.

Solid-state Devices

ATTENTION: Use of unrecommended test equipment for solid-state controls can result in damage to the control or test equipment or unintended actuation of the controlled equipment. See paragraph titled HIGH VOLTAGE TESTING.

Solid-state devices require a periodic visual inspection. Discolored, charred, or burned components can indicate the need to replace the component or circuit board. Replacements must be made only at the Personal Computer board or plug-in component level. Inspect printed circuit boards to determine that they are properly seated in the edge board connectors. Board locking tabs must also be in place. Solid-state devices must also be protected from contamination, and provisions for cooling must be maintained – see Contamination on page 194 and Cooling-fans on page 195. Do not use solvents on printed circuit boards.

Locking and Interlocking Devices

Check these devices for proper working-condition and capability of performing their intended functions. Make any necessary replacements only with Allen-Bradley renewal parts or kits. Adjust or repair only in accordance with Allen-Bradley instructions found in the product user manuals.

Notes:

PowerFlex 7000 Drive Spare Part Storage Requirements and Recommendations

Overview

If equipment containing electrolytic capacitors (for example, power supplies) is stored (unpowered) under normal storage temperatures and conditions, it can be kept for up to 15 years. After 15 years, the electrolyte inside of the capacitors dries because the rubber seals of the capacitor starts to deteriorate. During the storage period (of up to 15 years) it's required to maintain the electrolytic capacitors (to preserve the aluminum oxide dielectric).

To maintain the health of the electrolytic capacitors, the equipment must be energized annually.

Power Supplies

The following reconditioning procedures are applicable for the following components:

- Pioneer/Cosel power supply
- IGDPS
- IntelliVAC™ module
- Absopulse AC/DC converter
- Absopulse DC/DC converter

Energize the components with nominal input voltage for 1…2 hours every year of storage. If the power supplies were stored for a longer than three years without energizing, perform the reconditioning procedure as described below.

Reconditioning for AC/DC Power Supply

1. Connect the power supply through an AC autotransformer. The voltage range (120/240V) is adapted to the nominal voltage of the energized item.
2. Feed the power supply with 25% of the nominal voltage of the energized item for 15 minutes.
3. Increase voltage to 50% of the nominal voltage of the energized item, feed the power supply for another 15 minutes.
4. Increase voltage to 75% of the nominal voltage of the energized item, feed the power supply for another 15 minutes.
5. Increase voltage to 100% of nominal voltage of energized item, feed power supply for another 15 minutes.

Reconditioning for DC/DC power supply

1. Connect the power supply to a variable DC source with current limiting functionality (limit the current to 200 mA). The voltage range is adapted to nominal voltage of energized part.
2. Feed the power supply with 25% of the nominal voltage of the energized item for 15 minutes.

3. Increase voltage to 50% of the nominal voltage of the energized item, feed the power supply for another 15 minutes.
4. Increase voltage to 75% of the nominal voltage of the energized item, feed the power supply for another 15 minutes.
5. Increase voltage to 100% of the nominal voltage of the energized item, feed the power supply for another 15 minutes.

1606 Power Supply

If an average storage temperature of 25 °C (77 °F) is maintained, energize the power supply for approximately 10 minutes with nominal input voltage.

With adequate storage temperatures, this procedure should be performed at least every five years. At higher temperatures, this procedure should be performed every three years.

UPS Batteries

If the batteries are stored for a long period, recharge then every 6 months by connecting the UPS to utility power. The internal batteries charge to 90% capacity in less than 3 hours.

However, the UPS manufacturer recommends that the batteries charge for 48 hours after long-term storage. Check the battery recharge date on the shipping carton label.

ATTENTION: If the recharge date has passed and the batteries were never recharged, do not use them.

Control Equipment and Boards

Energize control equipment up once per year to achieve power supply capacitor integrity.

- Power up the ACB board once a year
- Replace the lithium battery in the DPM every 3 years

SGCT/SCR/SPS

Energize with nominal input voltage for 1…2 hours every year of storage.

To energize these components:

SGCT

- Use the AC power source, PS1, and IGDPS power supplies to power up the SGCT boards.
- Alternatively, use a variable DC source with current limiting functionality and the IGDPS power supplies.
- Or, use the assembly of variable AC power source (120V or 240V), SPS, and SPS wire harness that are provided with the drive.

SPGDB

- Use a variable DC power source with current limiting functionality.

SPS

- Use an assembly of variable AC power source (120V or 240V) and provided with the drive SPS wire harness.

If the boards were not energized for longer than 3 years, perform the following reconditioning procedures:

- SGCT
  - Apply 20V DC voltage (from an IGDPS or a variable DC power source) through a current limiting resistor (around 300 Ohms/1 Watt minimum) for one hour.
- SPGDB
  - Apply 20V DC voltage (from an IGDPS or a variable DC power source) through a current limiting resistor (around 300 Ohms/1 Watt minimum) for a period of one hour.

Cooling Fans

Rotated by hand (10…20 spins) every 3 months to ensure circulation of lubricant in bearings and to help prevent brinelling of the bearings.

Signal Conditioners

These components have a 3 year lifetime storage period.

Ethylene Glycol

If stored in a factory-sealed drum, ethylene glycol has a 5 year lifetime storage period.

Spare Parts Maintenance Schedule

Use the following table to determine the appropriate action per the spare parts maintenance schedule below.

Ch	Charging	This indicates that the component should be charged to maintain component integrity.
E	Energizing	This indicates that the component should be energized to maintain component integrity.
R	Recondition/ Reforming	This indicates that the component should be reconditioned/reformed to maintain component integrity.
Re	Replacement	This indicates that the component has reached its mean storage life, and should be replaced.
Ro	Rotating	This indicates that the component should be rotated to maintain component integrity.

Component Type		Period Interval (Months)																			
		3	**6**	**9**	**12**	**15**	**18**	**21**	**24**	**27**	**30**	**33**	**36**	**39**	**42**	**45**	**48**	**51**	**54**	**57**	**60**
Power Supplies	Pioneer/Cosel power supply	–	–	–	E	–	–	–	E	–	–	–	E/R(1)	–	–	–	E	–	–	–	E
	IGDPS	–	–	–	E	–	–	–	E	–	–	–	E/R(1)	–	–	–	E	–	–	–	E
	IntelliVAC module	–	–	–	E	–	–	–	E	–	–	–	E/R(1)	–	–	–	E	–	–	–	E
	Absopulse AC/DC Conv.	–	–	–	E	–	–	–	E	–	–	–	E/R(1)	–	–	–	E	–	–	–	E
	Absopulse DC/DC Conv.	–	–	–	E	–	–	–	E	–	–	–	E/R(1)	–	–	–	E	–	–	–	E
	1606 Power Supply	–	–	–	-	–	–	–	-	–	–	–	E(2)	–	–	–	–	–	–	–	E(2)
	UPS battery	–	Ch	–	Ch	–	Ch	–	Ch	–	Ch	–	Ch	–	Ch	–	Ch	–	Ch	–	Re
Control Equipment and Boards	ACB	–	–	–	E	–	–	–	E	–	–	–	E	–	–	–	E	–	–	–	E
	Lithium battery for DPM	–	–	–	–	–	–	–	–	–	–	–	Re	–	–	–	-	–	–	–	-
Power Components	SGCT	–	–	–	E	–	–	–	E	–	–	–	E/R(1)	–	–	–	E	–	–	–	E
	SCR SPGDB	–	–	–	E	–	–	–	E	–	–	–	E/R(1)	–	–	–	E	–	–	–	E
	SPS board	–	–	–	E	–	–	–	E	–	–	–	E/R(1)	–	–	–	E	–	–	–	E
Air-cooling system	Cooling fans	Ro	Ro	Ro	Ro	Ro	Ro	Ro	Ro	Ro	Ro	Ro	Ro	Ro	Ro	Ro	Ro	Ro	Ro	Ro	Ro
	Ethylene glycol	–	–	–	–	–	–	–	–	–	–	–	–	–	–	–	–	–	–	–	Re
Additional Devices	Signal conditioner	–	–	–	–	–	–	–	–	–	–	–	Re	–	–	–	–	–	–	–	–

Component Type		Period Interval (Months)																			
		63	**66**	**69**	**72**	**75**	**78**	**81**	**84**	**87**	**90**	**93**	**96**	**99**	**102**	**105**	**108**	**111**	**114**	**117**	**120**
Power Supplies	Pioneer/Cosel power supply	–	–	–	E/R(1)	–	–	–	E	–	–	–	E	–	–	–	E/R(1)	–	–	–	E
	IGDPS board	–	–	–	E/R(1)	–	–	–	E	–	–	–	E	–	–	–	E/R(1)	–	–	–	E
	IntelliVAC module	–	–	–	E/R(1)	–	–	–	E	–	–	–	E	–	–	–	E/R(1)	–	–	–	E
	Absopulse AC/DC Conv.	–	–	–	E/R(1)	–	–	–	E	–	–	–	E	–	–	–	E/R(1)	–	–	–	E
	Absopulse DC/DC Conv.	–	–	–	E/R(1)	–	–	–	E	–	–	–	E	–	–	–	E/R(1)	–	–	–	E
	1606 Power Supply	–	–	–	E(2)	–	–	–	–	–	–	–	–	–	–	–	E(2)	–	–	–	E(2)
	UPS battery	–	Ch	–	Ch	–	Ch	–	Ch	–	Ch	–	Ch	–	Ch	–	Ch	–	Ch	–	Re
Control equipment and boards	ACB	–	–	–	E	–	–	–	E	–	–	–	E	–	–	–	E	–	–	–	E
	Lithium battery for DPM	–	–	–	Re	–	–	–	-	–	–	–	-	–	–	–	Re	–	–	–	–
Power Components	SGCT	–	–	–	E/R(1)	–	–	–	E	–	–	–	E	–	–	–	E/R(1)	–	–	–	E
	SCR SPGDB	–	–	–	E/R(1)	–	–	–	E	–	–	–	E	–	–	–	E/R(1)	–	–	–	E
	SPS board	–	–	–	E/R(1)	–	–	–	E	–	–	–	E	–	–	–	E/R(1)	–	–	–	E
Air-cooling system	Cooling fans	Ro	Ro	Ro	Ro	Ro	Ro	Ro	Ro	Ro	Ro	Ro	Ro	Ro	Ro	Ro	Ro	Ro	Ro	Ro	Ro
	Ethylene glycol	–	–	–	–	–	–	–	–	–	–	–	–	–	–	–	–	–	–	–	Re
Additional devices	Signal conditioner	–	–	–	Re	–	–	–	–	–	–	–	–	–	–	–	Re	–	–	–	–

(1) Recommended energizing item up for 1...2 hours every year of storage. If the item was stored for a longer time without energizing (longer than 3 years), then the reconditioning procedure must be applied.

(2) With an average storage temperature of 25 °C (77 °F) the energizing procedure should be performed at least every five years, and at higher temperatures every three years.

Spare Parts Connection Matrix

Use this matrix to determine the appropriate supporting device for each component type.

Table 18 - Spare Parts Connection Matrix

Component Category	Component/Item	Supporting Device[1]									
		Variable AC Source (120/240V)	Variable DC Source with Current Limiting Function	PowerFlex 7000 Power Supply 1 (Pioneer/Cosel)	IGDPS Board	SPS Board	SPS Wire Harness	2 Pole Connector 80174-014-01-R	3 Pole Connector 80174-014-02-R	2 Pole Euro Style Plug 80026-131-10	AC Autotransformer (120/240V)[2]
Power Supplies	Pioneer/Cosel power supply	✓	–	–	–	–	–	–	–	–	✓
	IGDPS board	–	✓	–	–	–	–	✓	–	–	–
	IntelliVAC module[3]	✓	✓	–	–	–	–	–	–	–	✓
	Absopulse AC/DC Conv.	✓	–	–	–	–	–	–	–	–	✓
	Absopulse DC/DC Conv.	–	✓	–	–	–	–	–	–	–	–
	1606 power supply	✓	–	–	–	–	–	–	–	–	✓
Control equipment and Boards	ACB board	–	✓	–	–	–	–	–	–	✓	–
Power Components	SGCT[4]	✓	✓	✓	✓	✓	✓	–	–	–	–
	SCR SPGDB[4]	–	✓	–	–	–	–	–	✓	–	–
	SPS board	✓	–	–	–	–	✓	–	–	–	✓

(1) The nominal voltage of supporting device/s must be adapted to nominal voltage of energized item.
(2) The AC transformer is used only for the reconditioning procedure instead of variable AC source.
(3) The IntelliVAC module can be energized with AC or DC input voltage.
(4) Energize the SGCT boards using one of the methods below.
a. Assembly of AC power source, PowerFlex 7000 PS1 and IGDPS power supply.
b. Assembly of variable DC power source with current limiting function, SPS board, and wire harness provided with the drive.

Power Supply Connection Guidelines

Pioneer/Cosel Power Supply

1. Connect the AC source to the AC input terminals of Pioneer/Cosel power supply via 13 A circuit breaker.
2. Use 10 AWG (5.3 mm^2) wire to connect the devices.

Figure 157 - Pioneer/Cosel Power Supply

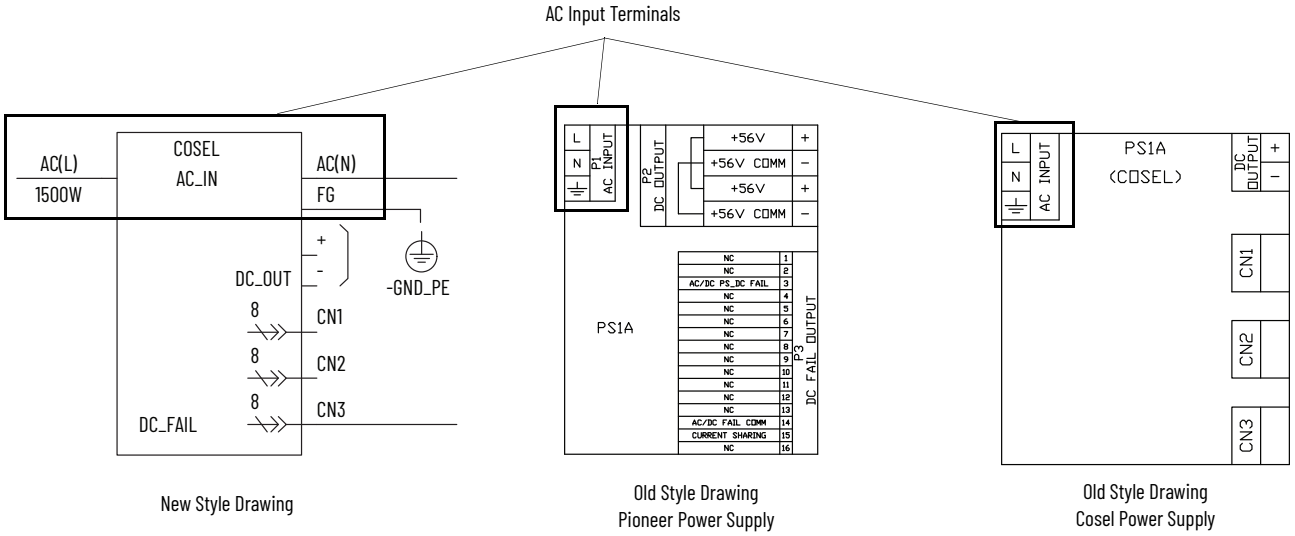

IGDPS

There are two methods to connect the IGDPS.

First Method

1. Connect the variable DC source with current limiting function (56V DC/200mA) to the DC input terminals of IGDPS.
2. Use 14 AWG (2.1 mm^2 wire) to connect the devices.

Second Method

1. Connect the AC source to the AC input terminals of Pioneer/Cosel power supply via 13 A circuit breaker.
2. Connect the Pioneer/Cosel power supply 56V DC output terminals to the DC input terminals of IGDPS.
3. Use 14 AWG (2.1 mm^2 wire) to connect the devices.

Figure 158 - IGDPS

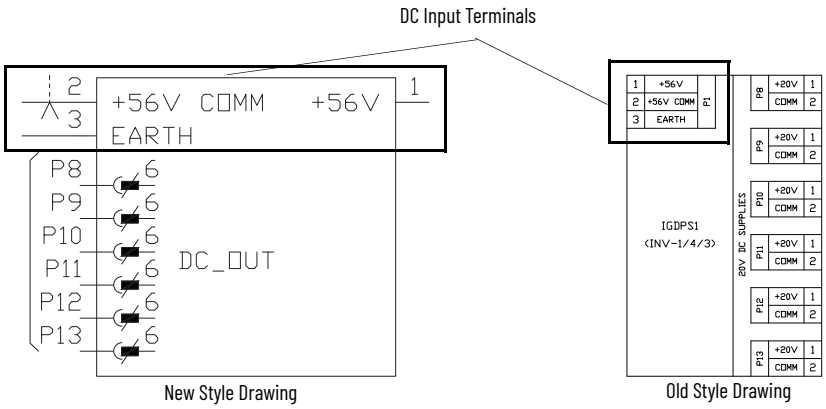

IntelliVAC Control Module

1. Connect the AC or DC source (120...240V) to the power input terminals of IntelliVAC control module via 2 A circuit breaker.
2. Use 12 AWG (3.3 mm^2) wire to connect the devices.

Figure 159 - IntelliVAC Control Module

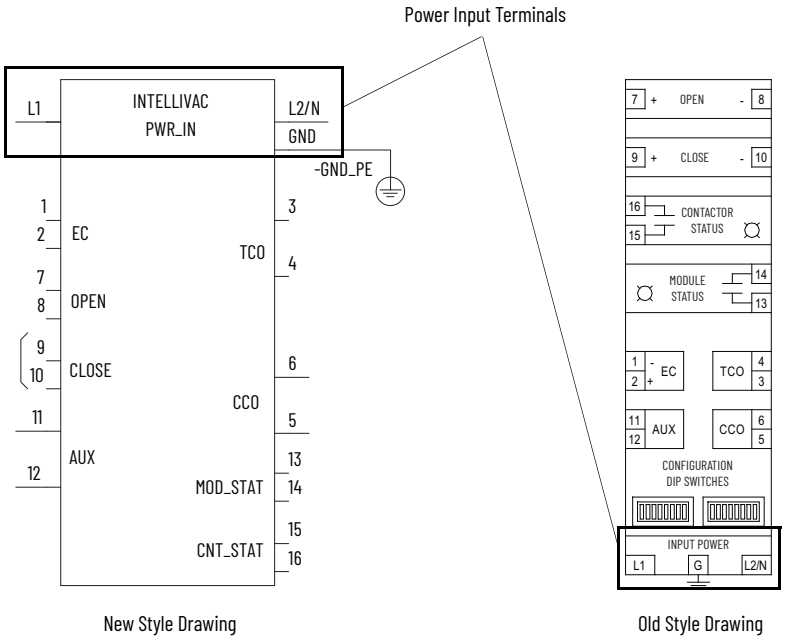

Absopulse AC/DC Converter

1. Connect the AC source to the AC input terminals of Absopulse AC/DC converter.
2. Use 12 AWG (3.3 mm^2) wire to connect the devices.

Figure 160 - Absopulse AC/DC Converter

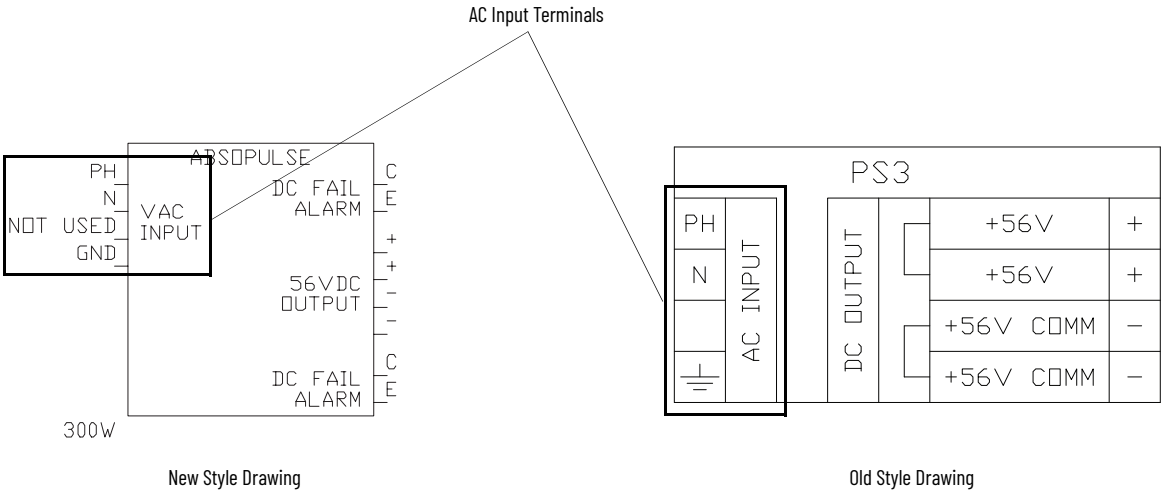

Absopulse DC/DC Converter

There are two methods to connect the Absopulse DC/DC converter.

First Method

1. Connect the variable DC source with current limiting function (56V DC/200mA) to the DC input terminals of DC/DC converter.
2. Use 12 AWG (3.3 mm^2) wire to connect the devices.

Second Method

1. Connect the AC source to the AC input terminals of Pioneer/Cosel power supply via 13 A circuit breaker
2. Connect the Pioneer/Cosel power supply 56V DC output terminals to the DC input terminals of DC/DC converter.
3. Use 12 AWG (3.3 mm^2) wire to connect the devices.

Figure 161 - Absopulse DC/DC Converter

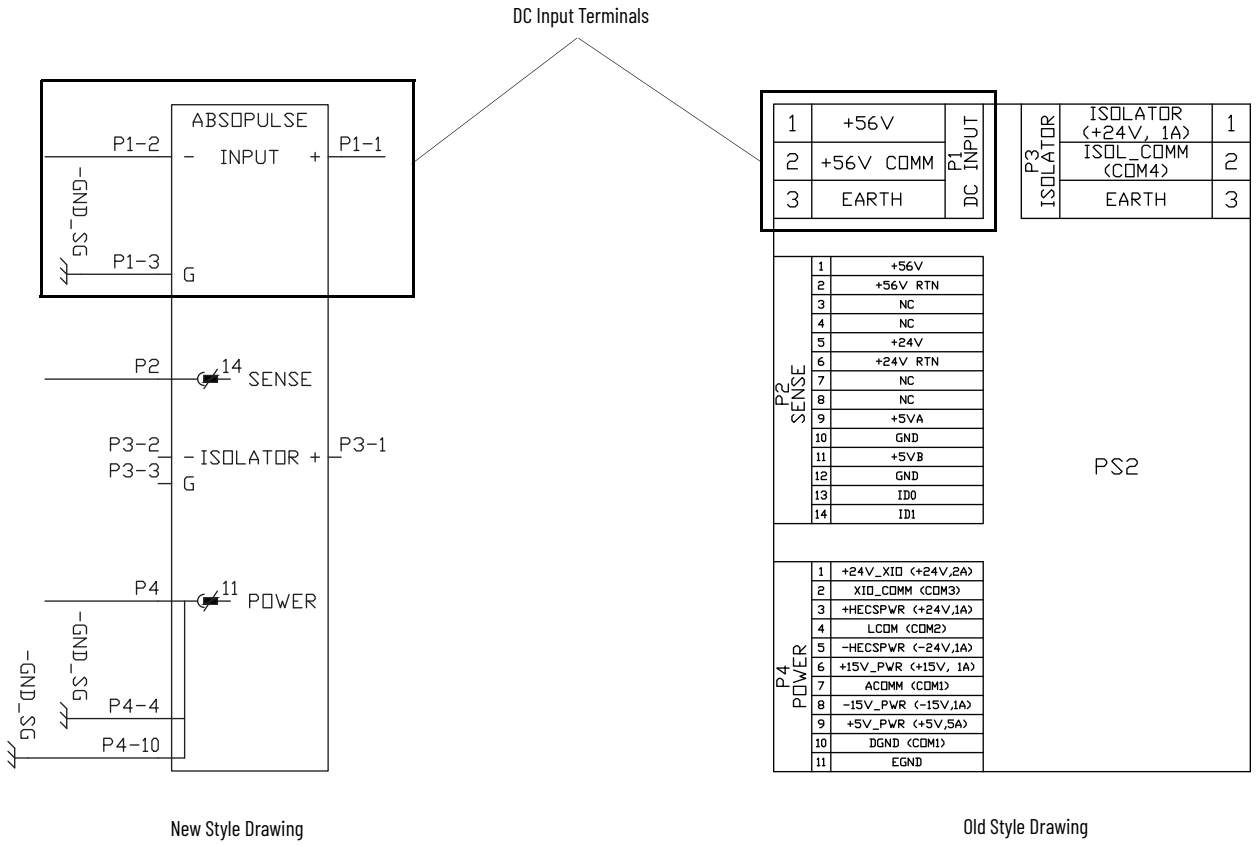

1606 Power Supply

1. Connect the variable AC source to the AC input terminals of 1606 power supply via 2 circuit breaker.
2. Use 12 AWG (3.3 mm^2) wire to connect the devices.

Figure 162 - 1606 Power Supply

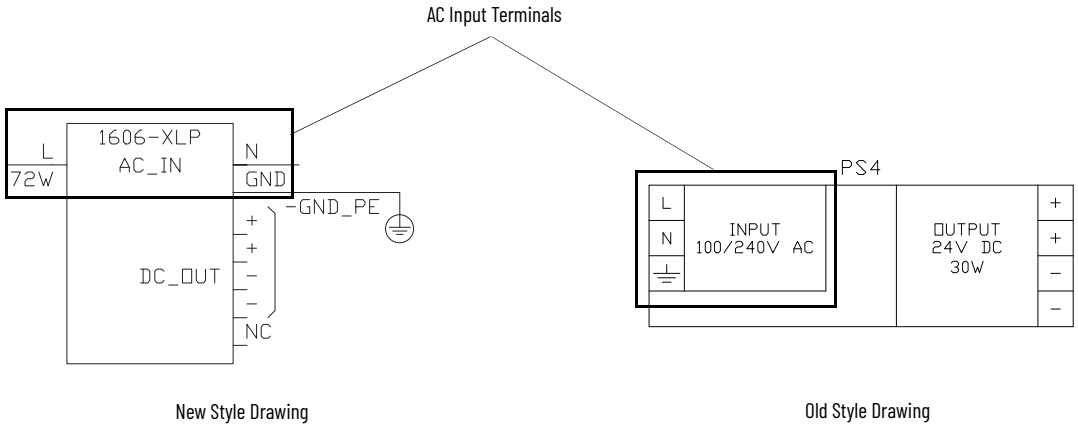

Control Equipment and Boards Connection Guidelines

Analog Control Board (ACB)

1. Connect the variable DC source with current limiting function (5V DC/ 200mA) to the +5V and DGND pin to the +5V pin of ACB DC input connector J13.
2. Use 18 AWG (0.8 mm^2) wire to connect the devices.

Figure 163 - Analog Control Board

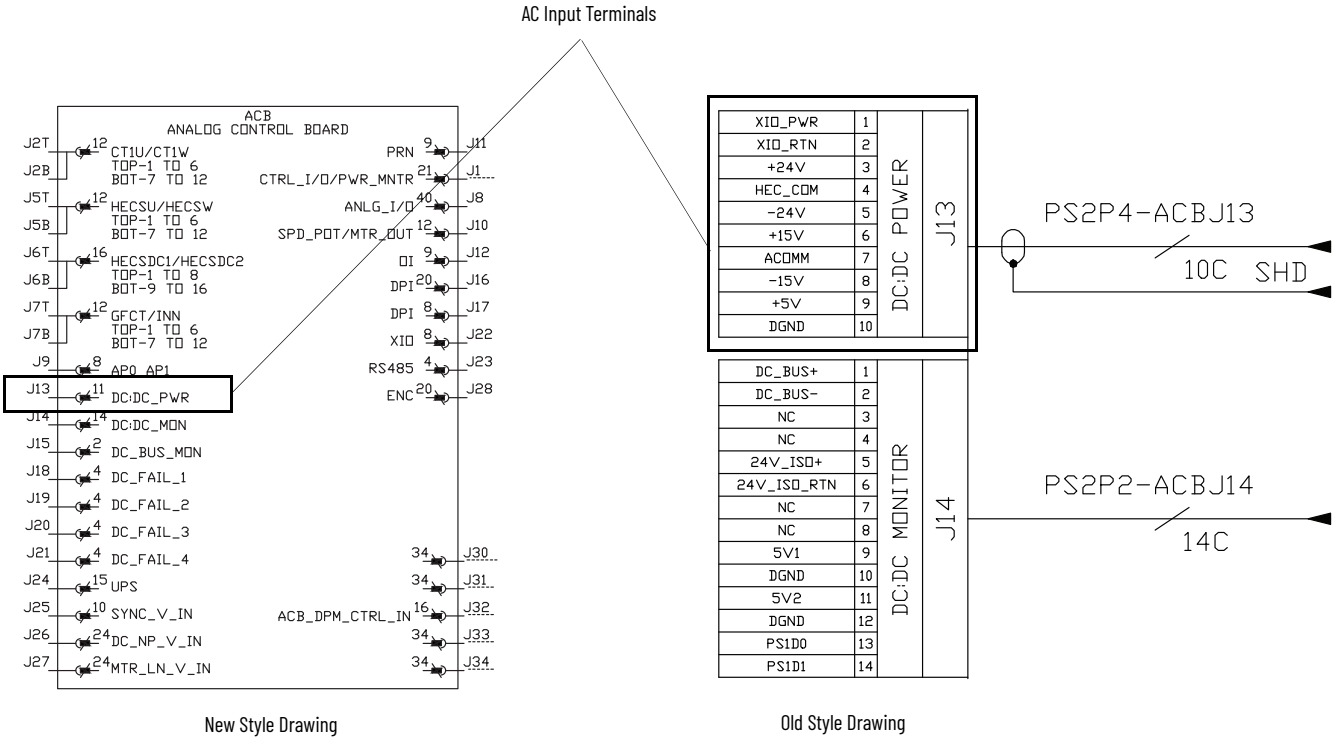

Power Components Connection Guidelines

SGCT - IGDPS

There are two connection methods for the IGDPS.

First Method

1. Connect the AC source to the AC input terminals of Pioneer/Cosel power supply via 13 A circuit breaker.
2. Connect the Pioneer/Cosel power supply 56V DC output terminals to the DC input terminals of IGDPS.
3. Connect the IGDPS 20V DC output terminals with SGCT DC input terminals.
4. Use 12 AWG (3.3 mm^2) wire to connect the power supply devices.
5. Use 16 AWG (1.3 mm^2) to connect the IGDPS with SGCT.

Second Method

1. Connect the variable DC source with current limiting function (56V DC/200mA) to the 56V DC input terminals of IGDPS.
2. Connect the IGDPS 20V DC output terminals with SGCT DC input terminals.
3. Use #14 AWG (2.1 mm^2)wire to connect the DC source with IGDPS.
4. Use #16 AWG (1.3 mm^2) to connect the IGDPS with SGCT.

Figure 164 - IGDPS

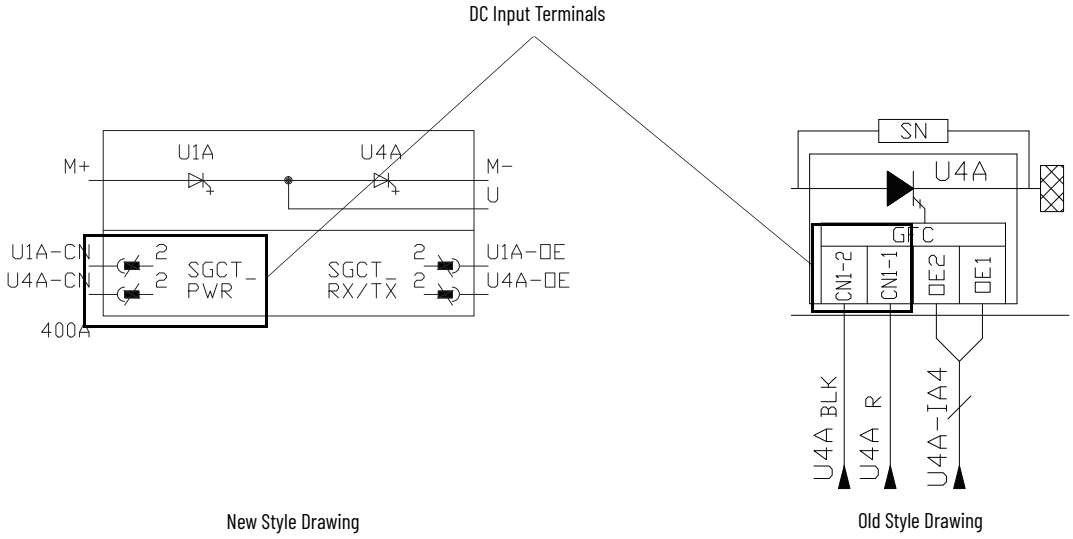

SGCT – SPS Board

1. Connect the variable AC power source 120V or 240V to the test plug of the SPS board.
2. Connect the SPS DC output terminals with the DC input terminals of SGCT.
3. Connect the AC power source to the SPS board using the SPS wire harness.
4. Use 16 AWG/1.3 mm^2 to connect the SPS with SGCT board.

Figure 165 - SGCT - SPS Board

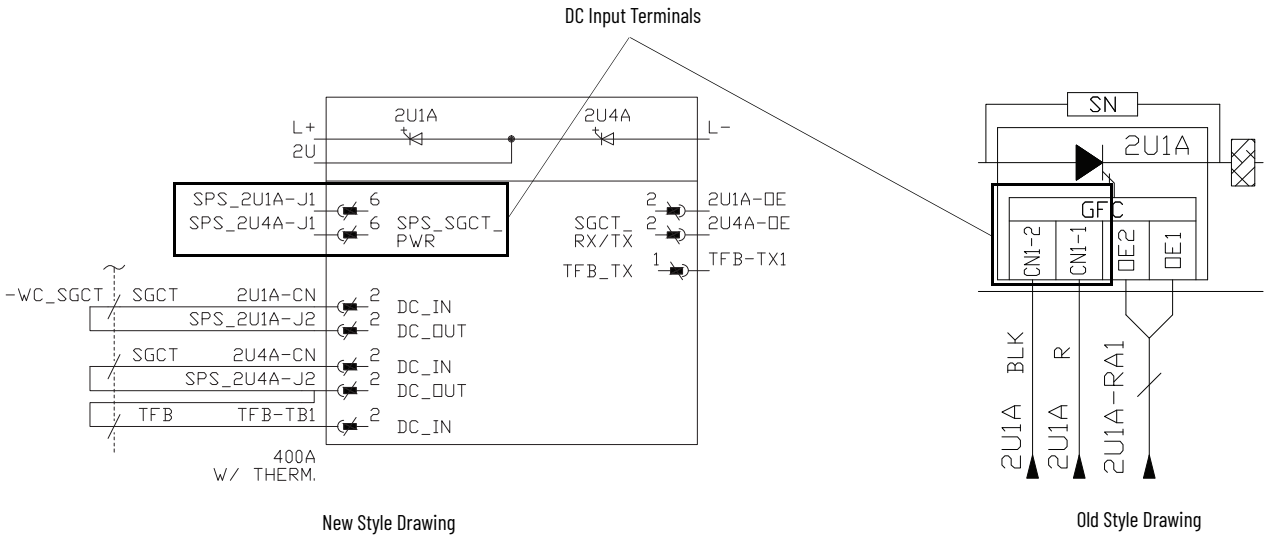

SPS Board

1. Connect the AC source 120V or 240V to the test plug of SPS board.
2. Use SPS wire harness provided with the drive to connect the SPS with AC source.

Figure 166 - SPS Board

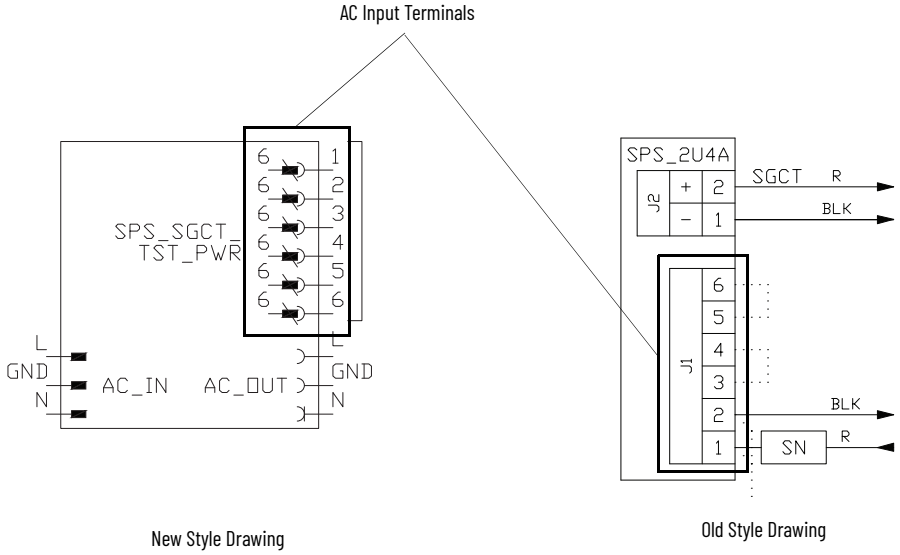

SCR - SPGDB

1. Connect the variable DC source with current limiting function (20V DC/100mA) to the test plug.
2. Use 14 AWG (2.1 mm^2) wire to connect the devices.

Figure 167 - SCR - SPGDB

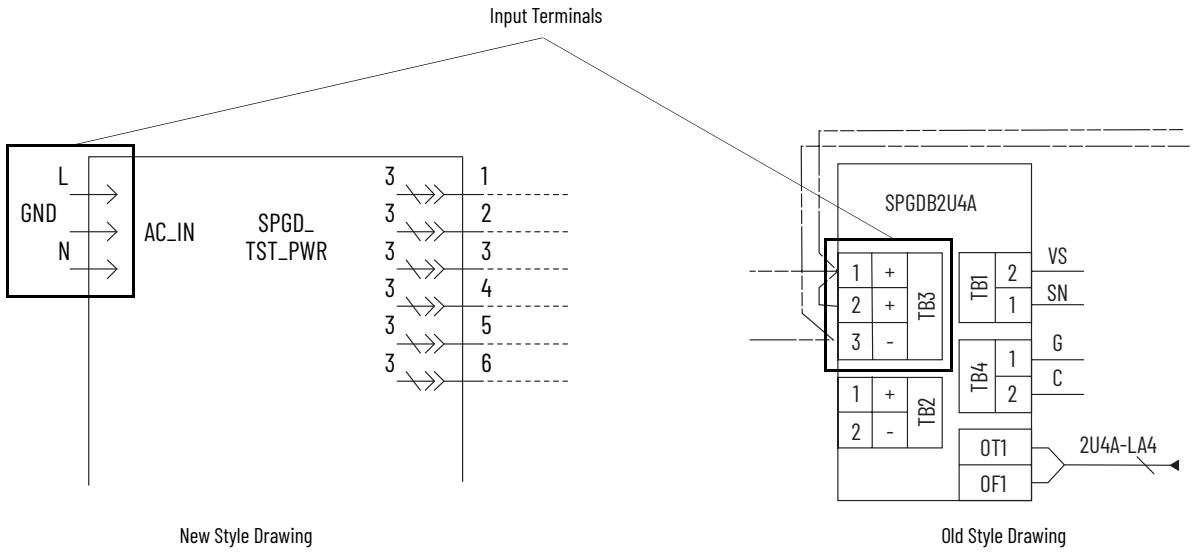

Connection Wires Size

Table 19 - PowerFlex 7000 Drive Connection Wire Sizes

AWG orMCM	Diameter (in.)	Diameter (mm)	Cross-SectionalArea (mm^2)
750	0.8660	22.00	380.031
700	0.8370	21.25	354.695
600	0.7750	19.67	304.025
500	0.7070	17.96	253.354
450	0.6710	17.04	228.018
400	0.6320	16.06	202.683
350	0.5920	15.03	177.348
300	0.5480	13.91	152.012
250	0.5000	12.70	126.677
0000 (4/0)	0.4600	11.68	107.160
000 (3/0)	0.4096	10.40	84.970
00 (2/0)	0.3648	9.27	67.400
0 (1/0)	0.3249	8.25	53.460
1	0.2893	7.35	42.390
2	0.2576	6.54	33.610
3	0.2294	5.83	26.650
4	0.2043	5.19	21.140
5	0.1819	4.62	16.760
6	0.1620	4.11	13.290
7	0.1443	3.67	10.550
8	0.1285	3.26	8.360
9	0.1144	2.91	6.630
10	0.1019	2.59	5.260
11	0.0907	2.30	4.170
12	0.0808	2.05	3.310
13	0.0720	1.83	2.630
14	0.0641	1.63	2.080
15	0.0571	1.45	1.650
16	0.0508	1.29	1.310
17	0.0453	1.15	1.040
18	0.0403	1.02	0.820
19	0.0359	0.91	0.650
20	0.0320	0.81	0.520
21	0.0285	0.72	0.410
22	0.0254	0.65	0.330
23	0.0226	0.57	0.260
24	0.0201	0.51	0.200
25	0.0179	0.45	0.160
26	0.0159	0.40	0.130

Notes:

Torque Requirements

Torque Requirements

Unless otherwise specified the following values of torque are to be used in maintaining the equipment.

Diameter	Pitch	Material	Torque (N•m)	Torque (lb•ft)
M2.5	0.45	Steel	0.43	0.32
M4	0.70	Steel	1.8	1.3
M5	0.80	Steel	3.4	2.5
M6	1.00	Steel	6.0	4.4
M8	1.25	Steel	14	11
M10	1.50	Steel	29	21
M12	1.75	Steel	50	37
M14	2.00	Steel	81	60
1/4 in.	20	Steel S.A.E. 5	12	9.0
5/16 in.	18	Steel S.A.E. 2	15	12
3/8 in.	16	Steel S.A.E. 2	27	20

Notes:

Insulation Resistance Test

When a ground fault occurs, the problem can appear either in the input to the drive, the drive, or the output to the motor. The ground fault condition indicates that a phase conductor has found a path to ground. A current with a magnitude that ranges from leakage to fault level exists that is dependent on the resistance of the path to ground. The drive itself rarely is a source of a ground fault when it is properly installed. Ground fault problems that are associated with the drive rarely occur. Normally, the fault source exists in either the input or output zone.

Since the procedure is more complex, it is recommended to first test the insulation resistance of the input and output zones when encountering a ground fault. If the location of the ground fault cannot be located outside the drive, test the insulation resistance of the drive.

With these two factors, it is recommended to first test the insulation resistance of the input and output zones when encountering a ground fault. If the location of the ground fault can not be located outside the drive, the drive will need to have an insulation resistance test. This procedure must be performed with due care as the hazards to drive exist if the safety precautions in the procedure are not followed. This is due to the fact the insulation resistance test procedure applies high voltage to ground: all the control boards in the drive have been grounded and if not isolated, they will have high potential applied to them causing immediate damage.

PowerFlex 7000L Insulation Resistance Test

ATTENTION: Use caution when performing an insulation resistance test. High voltage testing is potentially hazardous and may cause severe burns, injury or death. Where appropriate, the cause of the test equipment should be connected to ground.

Check the insulation levels before energizing power equipment. Performing an insulation resistance test provides a resistance measurement from the phase to phase and phase to ground by applying a high voltage to the power circuitry. This test is performed to detect ground faults without damaging any equipment.

This test is performed by floating the drive and all connected equipment to a high potential while measuring the leakage current to ground. Floating the drive implies temporary removal of any existing paths to ground necessary for normal operation of the drive.

ATTENTION: There exists the possibility of serious or fatal injury to personnel if safety guidelines are not followed.

The following procedure details how to test the insulation resistance of the PowerFlex® 7000L drive. Failure to comply with this procedure can result in poor reading and damage to the drive control boards.

Equipment Required

- Torque Wrench and 7/16 in. socket
- Phillips Screwdriver
- 2500/5000V insulation resistance test device

Procedure

1. **Isolate and Lock Out the Drive System from High Voltage**

   Disconnect any incoming power sources, medium voltage sources should be isolated and locked out and all control power sources should be turned off at their respective circuit breaker(s).

   Verify with a potential indicator that power sources have been disconnected; also, the control power in the drive is de-energized.

2. **Isolate the Power Circuit from System Ground (Float the drive)**

   It is necessary to remove the grounds on the following components within the drive (Refer to the electrical diagrams provided with the equipment to assist in determining the points which need to be disconnected):

   - Voltage Sensing Boards (VSB)
   - Output Grounding Network (OGN)

   Voltage Sensing Boards

   Remove all ground connections from all of the VSBs in the drive. This has to be done at the screw terminals on the VSB rather than the ground bus. There are two grounds on each board marked “GND 1”, and “GND 2”.

   It is important to disconnect the terminals on the boards rather than from the ground bus as the grounding cable is only rated for 600 V. Injecting a high voltage on the ground cable will degrade the cable insulation. Do not disconnect the white medium voltage wires from the VSBs. They must be included in the test.

   The number of VSBs installed in each drive varies depending on the drive configuration.

   Output Grounding Network

   Remove the ground connection on the OGN (if installed). This connection should be lifted at the OGN capacitor rather than the grounding bus as the grounding cable is only rated for 600V.

   Injecting a high voltage on the ground cable during an insulation resistance test will degrade the cable insulation.

3. **Disconnect Connections between Power Circuit and Low Voltage Control**

   Voltage Sensing Boards

   The connections between the low voltage control and the power circuit are made through ribbon cable connectors. The cables will be plugged into connectors on the Voltage Sensing Board marked "J1", "J2", and "J3", and terminate on the Signal Conditioning Boards. Every ribbon cable connection made on the VSBs should be marked for identification from the factory. Confirm the marking matches the connections, and disconnect the ribbon cables and move them clear of the VSB. If these ribbon cables are not removed from the VSB, then high potential will be applied directly to the low voltage control through the SCBs, and cause immediate damage to those boards.

   The VSB ribbon cable insulation is not rated for the potential applied during an insulation resistance test. It is important to disconnect the ribbon cables at the VSB rather than the SCB to avoid exposing the ribbon cables to high potential.

   Potential Transformer Fuses

   An insulation resistance test may exceed the rating of potential transformer fusing. Removing the primary fuses from all potential and control power transformers in the system will not only protect them from damage but remove a path from the power circuit back to the drive control.

   Transient Suppression Network

   A path to ground exists through the TSN network as it has a ground connection to dissipate high energy surges in normal operation. If this ground connection is not isolated, the insulation resistance test indicates a high leakage current reading through this path, falsely indicating a problem in the drive. To isolate this ground path, remove all fuses on the TSN before proceeding with the insulation resistance test.

4. **Insulation Resistance Test**

   Verify the drive and any connected equipment is clear of personnel and tools prior to commencing the insulation resistance test. Barricade off any open or exposed conductors. Conduct a walk-around inspection before commencing the test.

   All three phases on the line and machine sides of the drive are connected together through the DC Link and Snubber Network. Therefore a test from any one of the input or output terminals to ground will provide all the sufficient testing required for the drive.

   Be sure the insulation resistance tester is discharged prior to disconnecting it from the equipment.

   Connect the insulation resistance test device to the drive following the specific instructions for that model. If the insulation resistance test device has a lower voltage setting (normally 500V or 1000V), apply that voltage for 5 seconds as a precursor for the higher voltage rating. This may limit the damage if you forgot to remove any grounds. If the reading is very high, apply 5kV from any drive input or output terminal to ground. Perform a insulation resistance test at 5 kV for 1 minute and record the result.

   The test should produce a reading greater than the minimum values listed below. If the test results produced a value lower than these values start segmenting the drive system down into smaller components and repeat the test on each segment to identify the source of the ground fault. This implies isolating the line side of the drive from the machine side by removing the appropriate cables on the DC Link reactor.

The DC Link reactor may have to be completely isolated from the drive, at which point all four of its power cables must disconnected. It is imperative to ensure the electrical components are electrically isolated from ground. Items that may produce lower than expected readings are surge capacitors at the motor terminals, motor filter capacitors at the output of the drive. The insulation resistance test procedure must follow a systematic segmentation of electrical components to isolate and locate a ground fault.

Type of Drive	Minimum Insulation Resistance Test Value
Liquid-cooled drive	200 M Ohms
Air-cooled drive	1k M Ohm
Drive with input/output caps disconnected	5k M Ohm
Isolation transformer	5k M Ohm
Motor	5k M Ohm

The motor filter capacitors and line filter capacitors (if applicable) may result in the insulation resistance test result being lower than expected. These capacitors have internal discharge resistors designed to discharge the capacitors to ground. If you are uncertain of the insulation resistance test results disconnect the output capacitors.

Humidity and dirty standoff insulators may also cause leakage to ground because of tracking. You may have to clean a "dirty" drive prior to commencing the insulation resistance test.

5. **Reconnecting Connections between Power Circuit and Low Voltage Control**

   Reconnect the ribbon cables "J1", J2" and "J3" in all the VSBs. Do not cross the cable connections. Mixing the feedback cables may result in serious damage to the drive.

6. **Reconnect the Power Circuit to the System Ground**

   Voltage Sensing Boards

   Securely reconnect the two ground conductors on the VSBs.

   The two ground connections on the VSB provide a reference point for the VSB and enable the low voltage signal to be fed to the SCBs. If the ground conductor was not connected, the monitored low voltage signal could then rise up to medium voltage potential which is a serious hazard that must be avoided at all times. You must always ensure the ground conductors on the VSB are securely connected before applying medium voltage to the drive.

ATTENTION: Failure to connect both ground connections on the voltage sensing board will result in high potential in the Low Voltage cabinet within the drive which will result in damage to the drive control and possible injury or death to personnel.

Output Grounding Network

Reconnect the ground connection on the OGN capacitor. The bolt connection should be torque down to 3.4 N•m (30 lb•in). Exceeding the torque rating of this connection may result in damage to the capacitor.

ATTENTION: Failure to reconnect the OGN ground may result in the neutral voltage offset being impressed on the motor cables and stator, which may result in equipment damage. For drives that did not originally have the OGN connected (or even installed), this is not a concern.

Transient Suppression Network

Re-install the fuses on the TSN.

Environmental Considerations

Hazardous Materials

Environmental protection is a top priority for Rockwell Automation. The facility that manufactured this medium voltage drive operates an environmental management system that is certified to the requirements of ISO 14001. As part of this system, this product was reviewed in detail throughout the development process to ensure that environmentally inert materials were used wherever feasible. A final review has found this product to be substantially free of hazardous material.

Rockwell Automation is actively seeking alternatives to potentially hazardous materials for which no feasible alternatives exist today in the industry. In the interim, the following precautionary information is provided for your protection and for the protection of the environment. Contact the factory for any environmental information on any material in the drive or with any general questions regarding environmental impact.

Capacitor Dielectric Fluid

The fluids used in the filter capacitors and the snubber capacitors are generally considered very safe and are fully sealed within the capacitor housings. Shipping and handling of this fluid is typically not restricted by environmental regulations. In the unlikely event that capacitor fluid leaks out, avoid ingestion or contact with skin or eyes as slight irritation could result. Rubber gloves are recommended for handling.

To clean up, soak into an absorbent material and discard into an emergency container, or, if significant leakage occurs, pump fluid directly into the container. Do not dispose into any drain or into the environment in general or into general landfill refuse. Dispose of according to local regulations. If disposing of an entire capacitor, the same disposal precautions should be taken.

Printed Circuit Boards

Printed circuit boards may contain lead in components and materials. Circuit boards must be disposed of according to local regulations and must not be disposed of with general landfill refuse.

Lithium Batteries

This drive contains two small lithium batteries. One is mounted to the DPM and one is located in the PanelView™ user interface. Each battery contains less than 0.05 g of lithium, which is fully sealed within the batteries. Shipping and handling of these batteries is typically not restricted by environmental regulations, however, lithium is considered a hazardous substance.

Lithium batteries must be disposed of according to local regulations and must not be disposed of with general landfill refuse.

Chromate Plating

Some sheet steel and fasteners are plated with zinc and sealed with a chromate-based dip (gold-colored finish). Shipping and handling of the chromate plating parts is typically not restricted by environmental regulations, however, chromate is considered a hazardous substance. Dispose of chromate plated parts according to local regulations, not with general landfill refuse.

In Case Of Fire

This drive is highly protected against arcing faults and therefore it is very unlikely the drive would be the cause of a fire. In addition, the materials in the drive are self-extinguishing (they will not burn without a sustained external flame). If, however, the drive is subjected to a sustained fire from some other source, some of the polymer materials in the drive will produce toxic gases. As with any fire, individuals involved in extinguishing the fire or anyone in close proximity should wear a self-contained breathing apparatus to protect against any inhalation of toxic gases.

Disposal

When disposing of the drive, it should be disassembled and separated into groups of recyclable material as much as possible (for example, steel, copper, plastic, wire). These materials should then be sent to local recycling facilities. In addition, all disposal precautions mentioned above must also be taken for those particular materials.

History of Changes

This appendix contains the new or updated information for each revision of this publication. These lists include substantive updates only and are not intended to reflect all changes. Translated versions are not always available for each revision.

7000L-UM303F-EN-P, April 2022

Change
Removed the following sections: • Technical specifications • Catalog number explanation • Line and load cable sizes • Cable considerations • Torque capabilities These sections moved to PowerFlex 7000 Medium Voltage AC Drives Technical Data, publication 7000-TD010.
Removed typical application Load torque profile table. This was moved to PowerFlex Medium Voltage AC Drives Selection Guide, publication PFLEX-SG003
Updated operator interface section to account for eHIM
Updated Pump Maintenance Guidelines
Changed conductivity switch measurements to µS/cm from µS/cm^3
Added instruction around adding ethylene glycol with corrosion inhibitor to the reservoir
Added instruction on topping up fluid to not cause trip fault
Specified that ethylene glycol may contain approved corrosion inhibitors
Added appendix detailing spare part storage requirements
Changed Preventative Maintenance Schedule to replace pump seal every two years

7000L-UM303E-EN-P, March 2020

Change
Added warning for motor filter capacitors and indicative fault codes
Changed input frequency to ±5%
Changed inspect to replace for power devices in year 12

Notes:

Numerics

A

B

C

D

E

F

G

H

I

K

L

M

N

O

P

Q

R

S

T

U

V

W

X

Notes:

Rockwell Automation Support

Use these resources to access support information.

Technical Support Center	Find help with how-to videos, FAQs, chat, user forums, Knowledgebase, and product notification updates.	rok.auto/support
Local Technical Support Phone Numbers	Locate the telephone number for your country.	rok.auto/phonesupport
Technical Documentation Center	Quickly access and download technical specifications, installation instructions, and user manuals.	rok.auto/techdocs
Literature Library	Find installation instructions, manuals, brochures, and technical data publications.	rok.auto/literature
Product Compatibility and Download Center (PCDC)	Download firmware, associated files (such as AOP, EDS, and DTM), and access product release notes.	rok.auto/pcdc

Documentation Feedback

Your comments help us serve your documentation needs better. If you have any suggestions on how to improve our content, complete the form at rok.auto/docfeedback.

Waste Electrical and Electronic Equipment (WEEE)

At the end of life, this equipment should be collected separately from any unsorted municipal waste.

Rockwell Automation maintains current product environmental compliance information on its website at rok.auto/pec.

Allen-Bradley, Direct-to-Drive, DPI, DriveTools, expanding human possibility, IntelliVAC, PanelView, PowerCage, PowerFlex, and Rockwell Automation are trademarks of Rockwell Automation, Inc.
ControlNet, DeviceNet, and EtherNet/IP are trademarks of ODVA, Inc.
Windows is a trademark of Microsoft Corporation.
Trademarks not belonging to Rockwell Automation are property of their respective companies..

Rockwell Otomasyon Ticaret A.Ş. Kar Plaza İş Merkezi E Blok Kat:6 34752, İçerenköy, İstanbul, Tel: +90 (216) 5698400 EEE Yönetmeliğine Uygundur

Connect with us.

rockwellautomation.com — expanding **human possibility**®

AMERICAS: Rockwell Automation, 1201 South Second Street, Milwaukee, WI 53204-2496 USA, Tel: (1) 414.382.2000, Fax: (1) 414.382.4444
EUROPE/MIDDLE EAST/AFRICA: Rockwell Automation NV, Pegasus Park, De Kleetlaan 12a, 1831 Diegem, Belgium, Tel: (32) 2663 0600, Fax: (32) 2 663 0640
ASIA PACIFIC: Rockwell Automation SEA Pte Ltd, 2 Corporation Road, #04-05, Main Lobby, Corporation Place, Singapore 618494, Tel: (65) 6510 6608, FAX: (65) 6510 6699
UNITED KINGDOM: Rockwell Automation Ltd., Pitfield, Kiln Farm, Milton Keynes, MK11 3DR, United Kingdom, Tel: (44)(1908) 838-800, Fax: (44)(1908) 261-917

Publication 7000L-UM303G-EN-P - November 2023
Supersedes Publication 7000L-UM303F-EN-P - April 2022

Copyright © 2023 Rockwell Automation, Inc. All rights reserved. Printed in Canada.