PowerFlex 7000 Medium Voltage AC Drive Air-Cooled ('A' Frame)—ForGe Control

Bulletin Number 7000A

Allen-Bradley
by ROCKWELL AUTOMATION

User Manual

Original Instructions

Important User Information

Read this document and the documents listed in the additional resources section about installation, configuration, and operation of this equipment before you install, configure, operate, or maintain this product. Users are required to familiarize themselves with installation and wiring instructions in addition to requirements of all applicable codes, laws, and standards.

Activities including installation, adjustments, putting into service, use, assembly, disassembly, and maintenance are required to be carried out by suitably trained personnel in accordance with applicable code of practice.

If this equipment is used in a manner not specified by the manufacturer, the protection provided by the equipment may be impaired.

In no event will Rockwell Automation, Inc. be responsible or liable for indirect or consequential damages resulting from the use or application of this equipment.

The examples and diagrams in this manual are included solely for illustrative purposes. Because of the many variables and requirements associated with any particular installation, Rockwell Automation, Inc. cannot assume responsibility or liability for actual use based on the examples and diagrams.

No patent liability is assumed by Rockwell Automation, Inc. with respect to use of information, circuits, equipment, or software described in this manual.

Reproduction of the contents of this manual, in whole or in part, without written permission of Rockwell Automation, Inc., is prohibited.

Throughout this manual, when necessary, we use notes to make you aware of safety considerations.

WARNING: Identifies information about practices or circumstances that can cause an explosion in a hazardous environment, which may lead to personal injury or death, property damage, or economic loss.

ATTENTION: Identifies information about practices or circumstances that can lead to personal injury or death, property damage, or economic loss. Attentions help you identify a hazard, avoid a hazard, and recognize the consequence.

IMPORTANT Identifies information that is critical for successful application and understanding of the product.

These labels may also be on or inside the equipment to provide specific precautions.

SHOCK HAZARD: Labels may be on or inside the equipment, for example, a drive or motor, to alert people that dangerous voltage may be present.

BURN HAZARD: Labels may be on or inside the equipment, for example, a drive or motor, to alert people that surfaces may reach dangerous temperatures.

ARC FLASH HAZARD: Labels may be on or inside the equipment, for example, a motor control center, to alert people to potential Arc Flash. Arc Flash will cause severe injury or death. Wear proper Personal Protective Equipment (PPE). Follow ALL Regulatory requirements for safe work practices and for Personal Protective Equipment (PPE).

The following icon may appear in the text of this document.

Identifies information that is useful and can help to make a process easier to do or easier to understand.

Preface

Chapter 1

Overview of Drive

Chapter 2

Drive Installation

Power Component Definition and Maintenance

Chapter 3

Chapter 4

Control Component Definition and Maintenance

Appendix A

Preventative Maintenance Schedule

Appendix B

PowerFlex 7000 Drive Spare Part Storage Requirements and Recommendations

Notes:

About This Publication

This document provides procedural information for managing daily or recurring tasks involving the PowerFlex® 7000 medium voltage 'A' frame drives.

Download Firmware, AOP, EDS, and Other Files

Download firmware, associated files (such as AOP, EDS, and DTM), and access product release notes from the Product Compatibility and Download Center at rok.auto/pcdc.

Summary of Changes

This publication contains the following new or updated information. This list includes substantive updates only and is not intended to reflect all changes.

Topic	Page
Added warning around energizing isolation transformers	10
Updated section on how to connect to service and support	11
Changed torque value for replacing filter capacitors	95

Who Should Use This Manual

This manual is intended for use by personnel familiar with medium voltage and solid-state variable speed drive equipment. The manual contains material that enables regular operation and maintenance of the drive system.

What Is Not in This Manual

This manual provides information specific to the maintenance of the PowerFlex 7000 'A' frame drive. The manual excludes topics such as:

- Dimensional and electrical drawings that are generated for each customer order.
- Spare part lists compiled for each customer order.
- Human Machine Interface (HMI) operation and configuration.

Rockwell Automation provides the site- and installation-specific electrical and design information for each drive during the order process cycle. If they are not available on site with the drive, contact Rockwell Automation®.

If you have multiple drive types or power ranges, ensure you have the correct documentation for each specific PowerFlex 7000 product:

- 'A' frame for lower-power air-cooled, configurations (up to approximately 1250 hp/933 kW)
- 'B' frame for higher-power, air-cooled configurations (standard or heatpipe models)
- 'C' frame for all liquid-cooled configurations

General Precautions

ATTENTION: This drive contains ESD (electrostatic discharge) sensitive parts and assemblies. Static control precautions are required when installing, testing, servicing or repairing this assembly. Component damage may result if ESD control procedures are not followed. If you are not familiar with static control procedures, reference Allen-Bradley publication 8000-4.5.2, "Guarding Against Electrostatic Damage" or any other applicable ESD protection handbook.

ATTENTION: An incorrectly applied or installed drive can result in component damage or a reduction in product life. Wiring or application errors, such as, undersizing the motor, incorrect or inadequate AC supply, or excessive ambient temperatures may result in malfunction of the system.

ATTENTION: Only personnel familiar with the PowerFlex 7000 Variable Frequency Drive (VFD) or Adjustable Speed Drive (ASD) and associated machinery should plan or implement the installation, startup, and subsequent maintenance of the system. Failure to comply may result in personal injury and/or equipment damage.

ATTENTION: It is not recommended to repeatedly energize transformers. Transformer energization results in high inrush current (10...15 times the rated transformer current). Energizing a transformer multiple times in a short period of time, may subject the transformer windings and winding insulation to destructive thermal and electromechanical stress, due to the repetitive high inrush current. This energization limitation is similar to limiting the number of motor starts per hour to reduce thermal stress on a motor. The typical inrush current for a motor is much lower (six times the motor full-load current) making the energization limitation for an isolation transformer even more important.
For applications where the motor must be started frequently, PowerFlex medium voltage drives should be left in the 'Drive Ready' mode. The input contactor/breaker remains closed in this mode (i.e., medium voltage remains present on the transformer) and the drive will start, run, and stop the motor when required, without the need to energize and deenergize the drive isolation transformer.

ATTENTION: To keep arc resistant structural integrity, if applicable, the following rules must be followed:

- The pressure relief vent may not be tampered with, and it is not to be used as a step.
- No unapproved alterations can be made to the enclosure.
- All covers, plates, and hardware removed for installation or maintenance purposes must be re-installed and properly secured. Failure to do so voids the arc resistant structural integrity.
- Power cable entry points are to be treated as the boundary to a hazardous location and must be sealed accordingly. Failure to do so voids the arc resistant structural integrity.
- A plenum or chimney must be used to direct the arc flash energy to a suitable location. Failure to do so voids the arc resistant structural integrity. See publication 7000-IN007.
- All wiring between the low voltage panel and the power cell must be routed through a suitable cable gland to ensure flames and gases are not transmitted into this area (as fitted from factory).
- The medium voltage doors must be properly secured using the handle mechanism (if provided), the key interlock (if provided), and the door bolts. Failure to do so voids the arc resistant structural integrity.

Connect to Service and Support and Product Documentation

Global Customer Care

Technical Documents

Scan the left QR code to get connected to your Regional Customer Care Group.

Scan the right QR code to get connected to the PowerFlex 7000 Medium Voltage Drive product page, where you can access user manuals, technical specifications, firmware manuals, and more.

Abbreviations

This table contains abbreviations used throughout this document.

Table 1 - Abbreviations

Abbreviation	Description
ACB	Analog Control Board
AFE	Active Front End
ASD	Adjustable Speed Drive
CMC	Common Mode Choke
CSI	Current Source Inverter
CT	Current Transformer
DMM	Digital Multimeter
DPM	Drive Processor Module
HECS	Hall Effect Current Sensor
HMI	Human Machine Interface
HPTC	High Performance Torque Control
IFM	Interface Module
IGDPS	Isolated Gate Driver Power Supply
LV	Low Voltage
MOV	Metal-oxide Varistor
MV	Medium Voltage
GN	Grounding Network
OIB	Optical Interface Board
OIBB	Optical Interface Base Board
PIV	Peak Inverse Rating
PLC	Programmable Logic Controller
PWM	Pulse Width Modulated
SCB	Signal Conditioning Board
SCR	Silicon-controlled Rectifier
SGCT	Symmetrical Gate Commutated Thyristor
SHE	Selective Harmonic Elimination
SIL	Safety Integrity Level
SPGDB	Self-powered Gate Driver Board

Table 1 - Abbreviations (Continued)

Abbreviation	Description
SPS	Self-powered SGCT Power Supply
STO	Safe Torque Off
TSN	Transient Suppression Network
UPS	Uninterruptible Power Supply
VFD	Variable Frequency Drive
VSB	Voltage Sensing Board
VSI	Voltage Source Inverter
XIO	External Input/Output

Additional Resources

These documents contain additional information concerning related products from Rockwell Automation.

Resource	Description
PowerFlex 7000 Medium Voltage AC Drives Technical Data, publication 7000-TD010.	Provides technical specifications, standards and certifications, product selection tables, cable considerations, torque capabilities and drive dimensions.
PowerFlex Medium Voltage AC Drives Selection Guide, publication PFLEX-SG003	Provides information to correctly select the appropriate drive for your application. Includes typical application load torque profiles, drive options, catalog number explanation, and features.
PowerFlex 7000 Medium Voltage AC Drive Transportation and Handling - ForGe Control, publication 7000-IN008	Provides receiving and handling instructions for Medium Voltage variable frequency drive and related equipment
PowerFlex 7000 HMI Offering with Enhanced Functionality, publication 7000-UM201	Provides detailed information to configure, set up, operate, update and troubleshoot the PowerFlex 7000 HMI Interface Board
HMI Interface Board Software Updater and Firmware Download Procedure, publication 7000-QS002	Provides quick start information on updating HMI Interface Board software
EtherNet/IP Network Devices User Manual, ENET-UM006	Describes how to configure and use EtherNet/IP devices to communicate on the EtherNet/IP network.
Ethernet Reference Manual, ENET-RM002	Describes basic Ethernet concepts, infrastructure components, and infrastructure features.
System Security Design Guidelines Reference Manual, SECURE-RM001	Provides guidance on how to conduct security assessments, implement Rockwell Automation products in a secure system, harden the control system, manage user access, and dispose of equipment.
UL Standards Listing for Industrial Control Products, publication CMPNTS-SR002	Assists original equipment manufacturers (OEMs) with construction of panels, to help ensure that they conform to the requirements of Underwriters Laboratories.
American Standards, Configurations, and Ratings: Introduction to Motor Circuit Design, publication IC-AT001	Provides an overview of American motor circuit design based on methods that are outlined in the NEC.
Industrial Components Preventive Maintenance, Enclosures, and Contact Ratings Specifications, publication IC-TD002	Provides a quick reference tool for Allen-Bradley industrial automation controls and assemblies.
Safety Guidelines for the Application, Installation, and Maintenance of Solid-state Control, publication SGI-1.1	Designed to harmonize with NEMA Standards Publication No. ICS 1.1-1987 and provides general guidelines for the application, installation, and maintenance of solid-state control in the form of individual devices or packaged assemblies incorporating solid-state components.
Industrial Automation Wiring and Grounding Guidelines, publication 1770-4.1	Provides general guidelines for installing a Rockwell Automation industrial system.
Product Certifications website, rok.auto/certifications.	Provides declarations of conformity, certificates, and other certification details.

You can view or download publications at rok.auto/literature.

Overview of Drive

Introduction

The PowerFlex® 7000 drive is a general-purpose, standalone, medium voltage drive. The drive controls speed, torque, direction, and the start and stops of standard asynchronous or synchronous AC motors. The PowerFlex 7000 works on numerous standard and specialty applications such as fans, pumps, compressors, mixers, conveyors, kilns, fan-pumps, and test stands. The PowerFlex 7000 is used in industries such as petrochemical, cement, mining and metals, forest products, power generation, and water/waste water.

The PowerFlex 7000 drive meets most common standards from the National Electrical Code (NEC), International Electrotechnical Commission (IEC), National Electrical Manufacturers Association (NEMA), Underwriters Laboratories (UL), and Canadian Standards Association (CSA). The PowerFlex 7000 is available with most common supply voltages at medium voltage, from 2400...6600V.

Topology

The PowerFlex 7000 drive uses a pulse width modulated (PWM) – current source inverter (CSI) topology. This topology offers a simple, cost-effective power structure that is easy to apply to a wide voltage and power range. The power semiconductor switches used are easy-to-series for any medium voltage level. Semiconductor fuses are not required for the power structure due to the current limiting DC link inductor.

With 6500V PIV rated power semiconductor devices, the number of inverter components is kept to a minimum. For example, only six inverter switching-devices are required at 2400V, 12 at 3300...4160V, and 18 at 6600V.

The PowerFlex 7000 drive provides inherent regenerative-braking for applications where the load is overhauling the motor. Or where high inertia loads are slowed down quickly. Symmetrical gate-commutated thyristors (SGCTs) are used for machine converter switches and line converter switches.

The PowerFlex 7000 drive provides a selectable option for enhanced torque control capabilities and increased dynamic control performance. This high-performance torque control (HPTC) feature delivers 100% torque at zero speed and provides torque control through zero speed with smooth direction transition.

Rectifier Designs

Configurations

The PowerFlex 7000 drive offers three rectifier configurations for "A" Frame drives:

- Direct-to-Drive™ (Active Front End [AFE] rectifier with integral line reactor and Common Mode Choke)
- AFE rectifier with separate isolation transformer
- AFE rectifier with integral isolation transformer

Direct-to-Drive

Direct-to-Drive technology does not require an isolation transformer or multiple rectifier bridges. Instead of multiple uncontrolled rectifiers, an AFE rectifier bridge is supplied. The rectifier semiconductors that are used are symmetrical gate commutated thyristors (SGCTs). Unlike the diodes that are used in VSI (voltage source inverter) rectifier bridges, SGCTs are turned on and off by a gating signal. A pulse-width modulation (PWM) gating-algorithm controls the firing of the rectifier devices, similar to the control philosophy of the inverter. The gating algorithm uses a specific 42 pulse switching-pattern (Figure 1) called selective harmonic elimination (SHE) to mitigate the 5th, 7th, and 11th harmonic orders

Figure 1 - Typical PWM Switching-pattern, Line Voltage Waveform

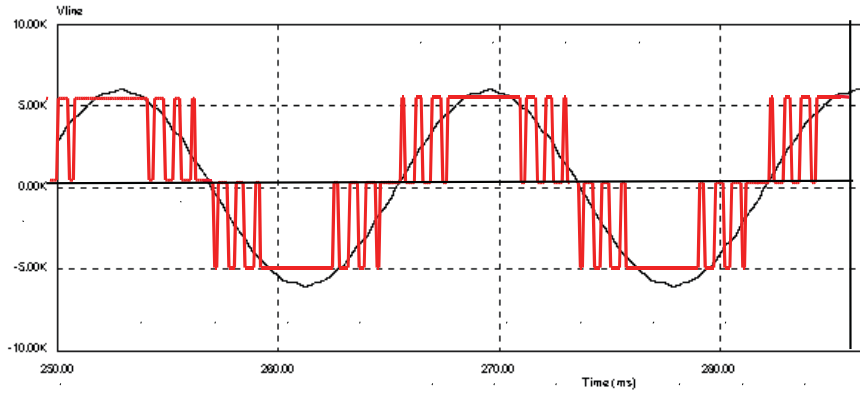

An integral line reactor and capacitor addresses the high harmonic orders (13th and above). The integral line reactor and capacitor also provide sinusoidal voltage and current waveforms back to the distribution system. The capacitor delivers excellent line-side harmonic and power factor performance to meet IEEE 519-1992 requirements and other global harmonic standards. All while providing a simple, robust power structure that maximizes uptime by minimizing the number of discrete components and the number of interconnections required.

A common mode choke (CMC) mitigates the common mode voltage that is seen at the motor terminals. Standard (non-inverter duty rated) motors and motor cables can be used. This technology is ideal for motor retrofit applications.

An integral starter is offered as an option.

Figure 2 - 3300/4160V Direct-to-Drive (Transformerless AFE Rectifier)

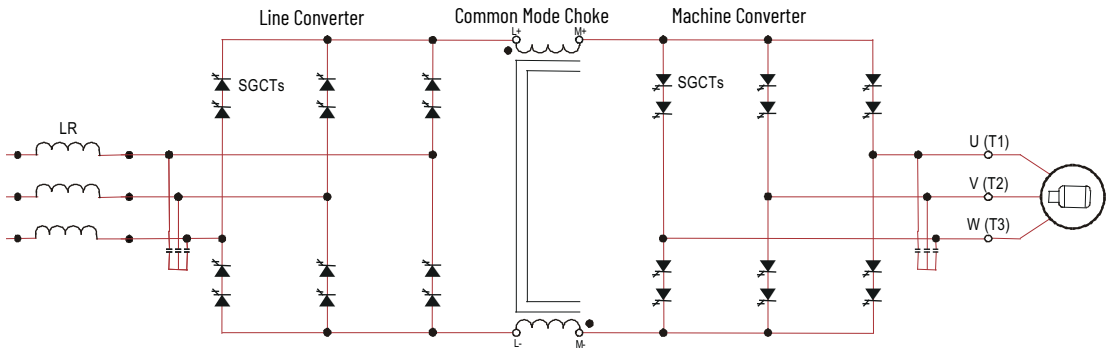

AFE Rectifier with Separate Isolation Transformer

For applications when the line voltage is higher than the motor voltage, a transformer is required for voltage matching. In this case, providing an AFE rectifier with a separate isolation transformer is ideal (indoor and outdoor transformer versions are offered). The isolation transformer provides the input impedance (which replaces the integral line reactor) and addresses the common mode voltage (which replaces the CMC that is in the Direct-to-Drive rectifier configuration). However, the AFE rectifier, its operation, and advantages are the same as the Direct-to-Drive™ configuration.

Figure 3 - 3300/4160 AFE Rectifier with Separate Isolation Transformer

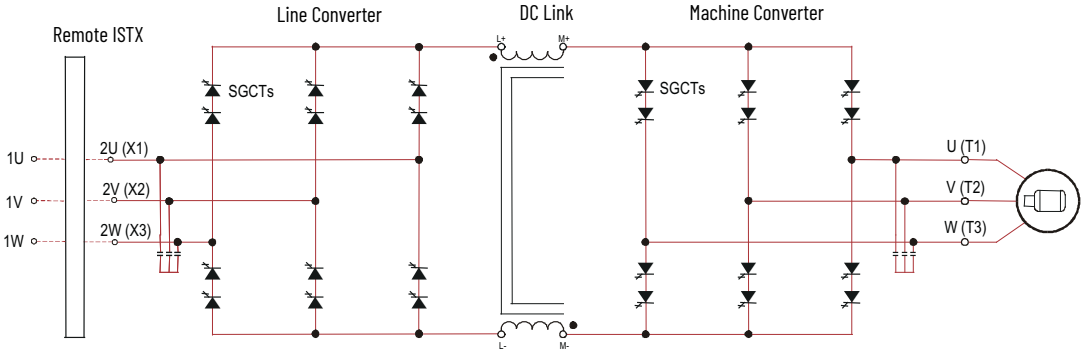

AFE Rectifier with Integral Isolation Transformer

For applications that require a higher power rating than available with Direct-to-Drive, providing an AFE rectifier with an integral isolation transformer is ideal (indoor and outdoor transformer versions are offered). The isolation transformer provides the input impedance (which replaces the integral line reactor) and addresses the common mode voltage (which replaces the CMC in the Direct-to-Drive rectifier configuration). However, the AFE rectifier, its operation, and advantages are the same as the Direct-to-Drive configuration.

Figure 4 - 3300/4160 AFE Rectifier with Integral Isolation Transformer

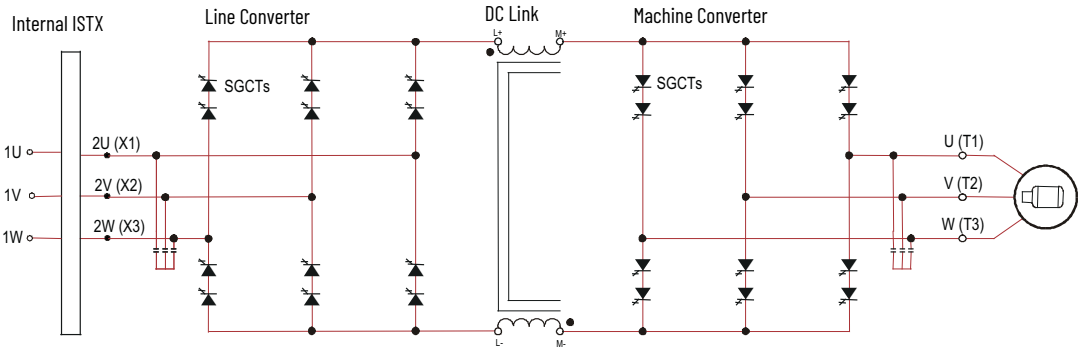

Motor Compatibility

The PowerFlex 7000 achieves near sinusoidal current and voltage waveforms to the motor, with no significant additional heating or insulation stress. The motor that is connected to the VFD is typically 3 °C (5.4 °F) higher compared to across-the-line operation. Voltage waveform has dv/dt of less than 50V/µs. Reflected wave and dv/dt issues that are often associated with VSI drives do not exist with the PowerFlex 7000. Typical motor waveforms are shown in Figure 5. These waveforms use a selective harmonic elimination (SHE) pattern in the inverter to eliminate major order harmonics. And with a small output capacitor (integral to the drive) to eliminate harmonics at higher speeds.

Standard motors are compatible without derating, even on retrofit applications.

Motor cable distance is unlimited. This technology can of control motors up to 15 km (9.3 miles) away from the drive.

Figure 5 - Motor Wave Forms at Full Load, Full Speed

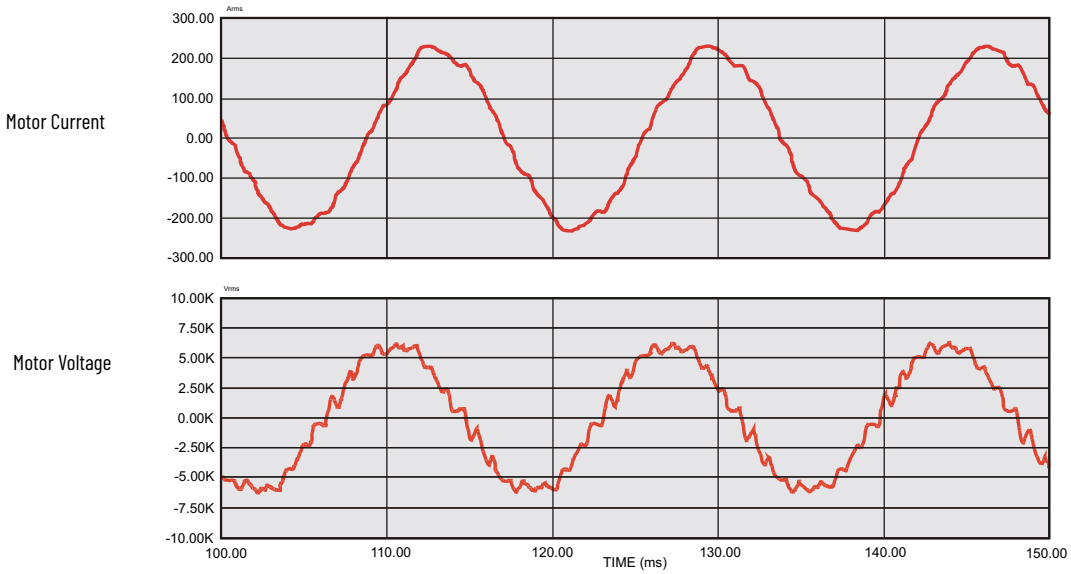

Simplified Electrical Drawings

2400V

Figure 6 - 2400V - Direct-to-Drive (Transformerless AFE Rectifier)

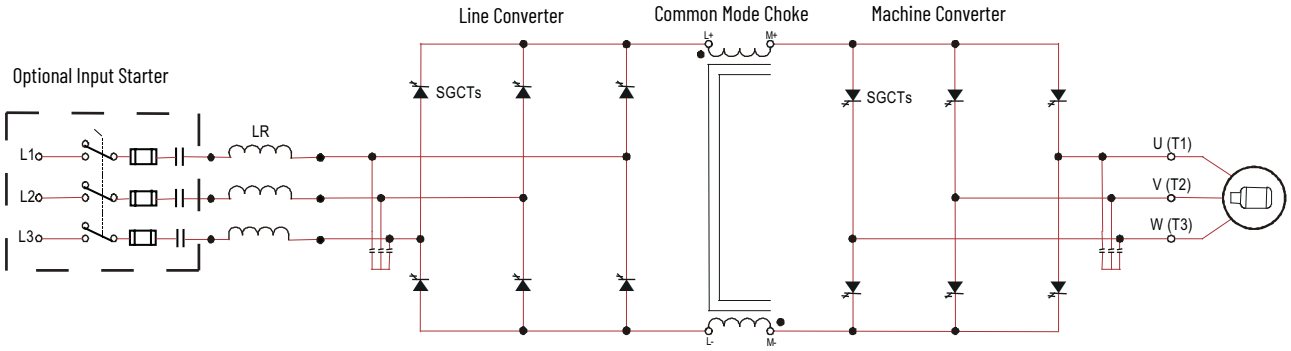

Figure 7 - 2400 Volt – AFE Rectifier with Separate Isolation Transformer

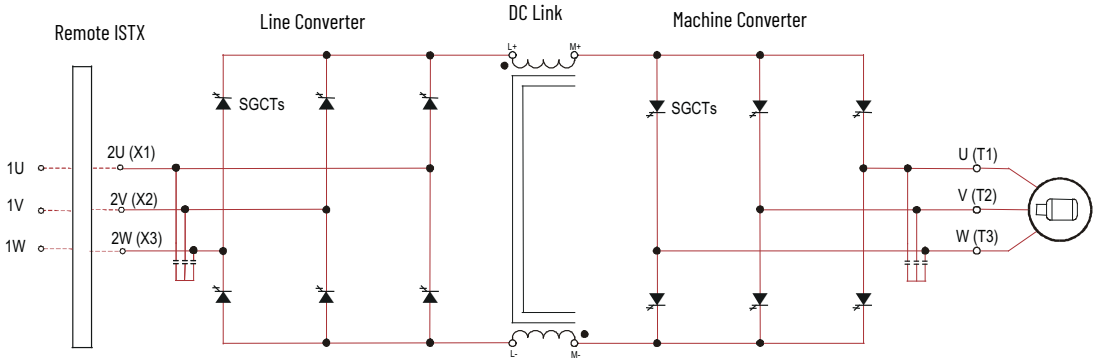

Figure 8 - 2400 Volt – AFE Rectifier with Integral Isolation Transformer

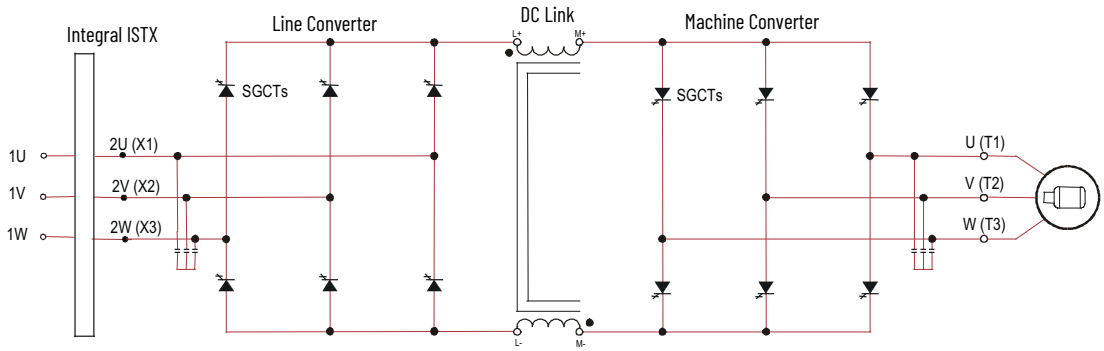

3300/4160V

Figure 9 - Direct-to-Drive (Transformerless AFE Rectifier)

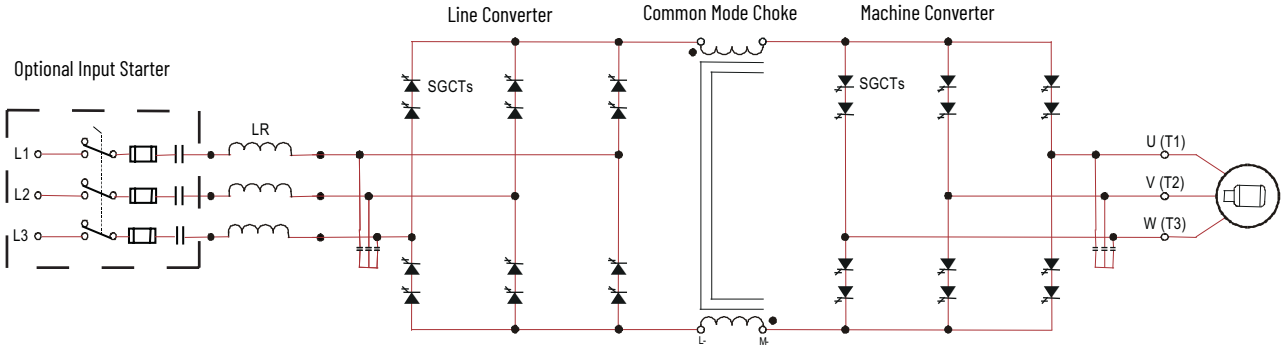

Figure 10 - AFE Rectifier with Separate Isolation Transformer

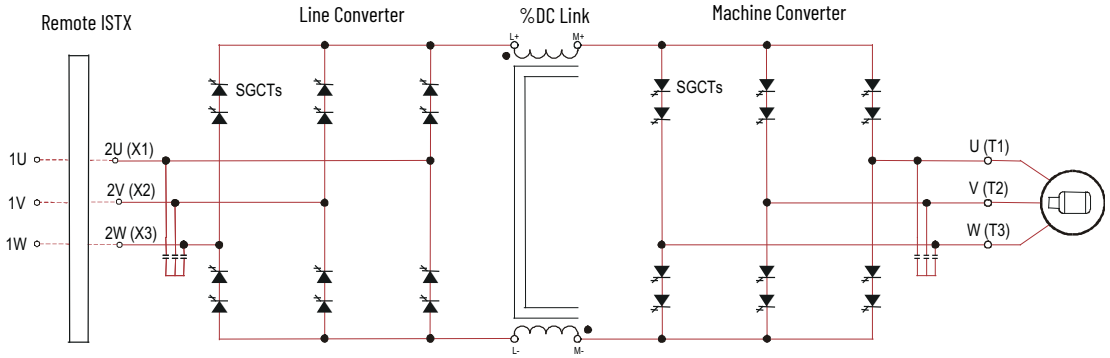

Figure 11 - AFE Rectifier with Integral Isolation Transformer

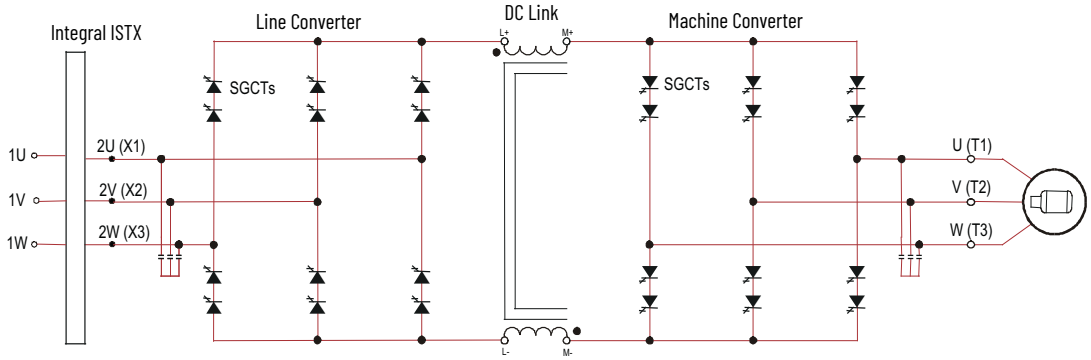

6600V

Figure 12 - Direct-to-Drive (Transformerless AFE Rectifier)

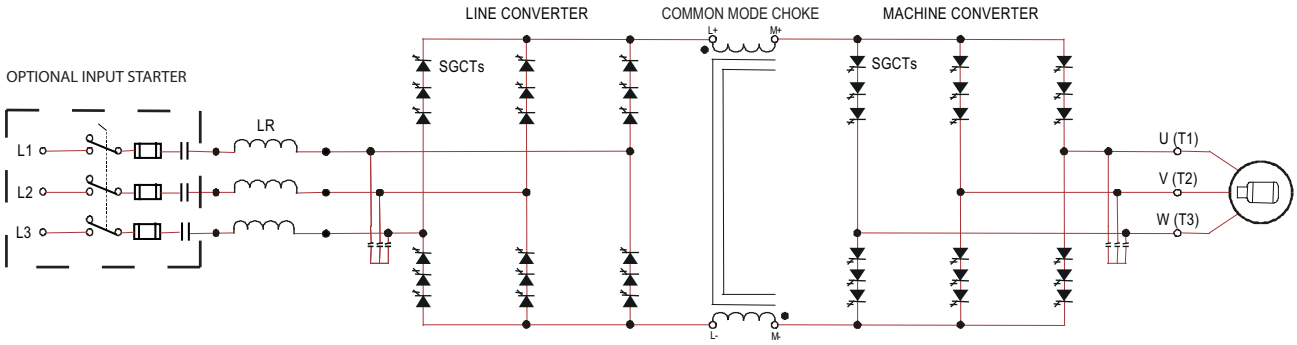

Figure 13 - AFE Rectifier with Separate Isolation Transformer

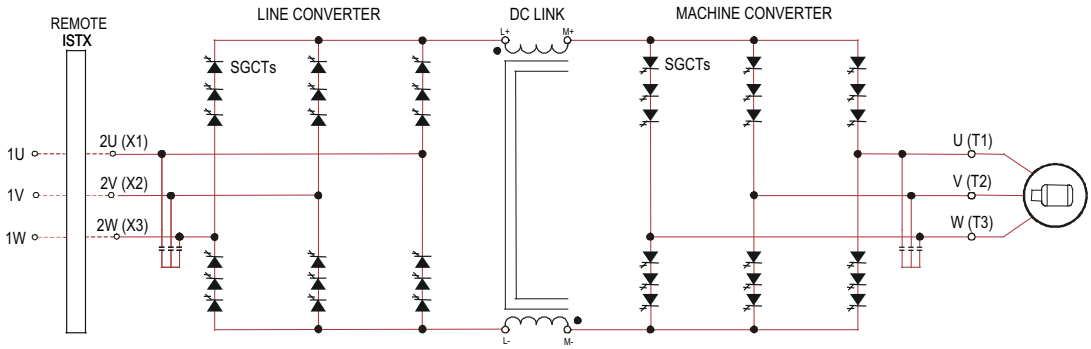

Figure 14 - AFE Rectifier with Integral Isolation Transformer

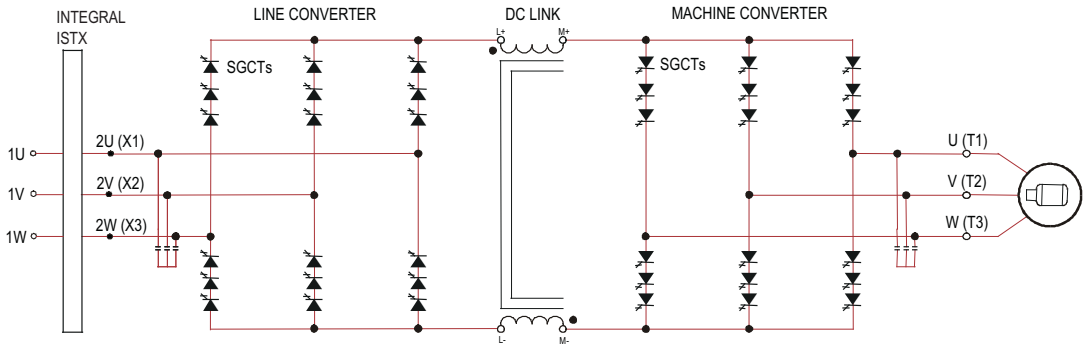

Safe Torque Off

Safe Torque Off is a functional safety feature that is integrated into the PowerFlex 7000, available for Active Front End (AFE) and Direct-to-Drive configurations. The drive can receive a safety input signal (for example, from an optical sensor or a safety gate). Then remove rotational power from the motor to allow the motor to coast to a stop. After the Safe Torque Off command is initiated, the drive will declare it's in the safe state. The drive itself remains powered and the safe state is reliably monitored to make sure that no rotational torque can be delivered to the motor. The drive can return rotational power to the motor after Safe Torque Off condition has been reset.

Figure 15 - Safe Torque Off

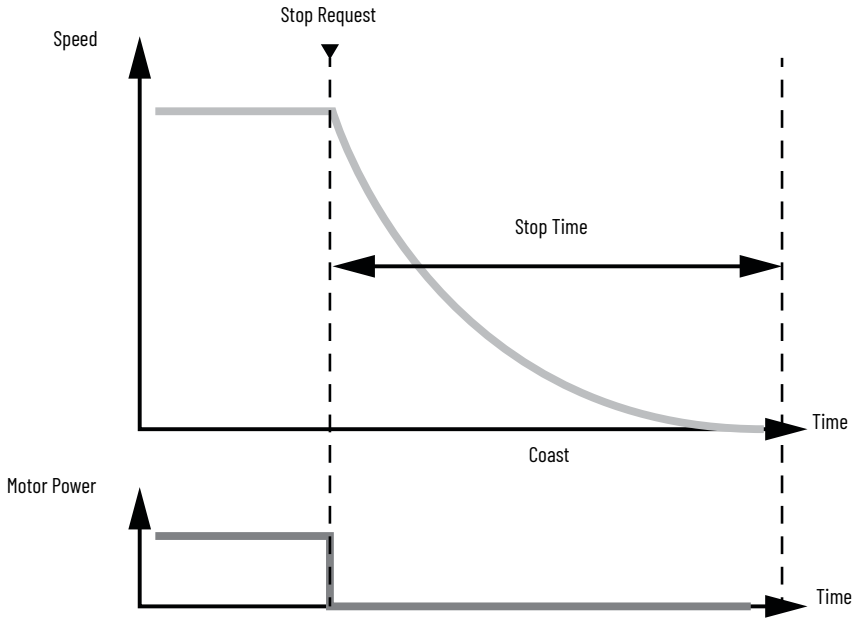

An internal safety relay provides for the safety input and reset circuits.

Safe Torque Off can be used in Active Front End (AFE) and Direct-to-Drive rectifier drive configurations for A, B, and C frames. Safe Torque Off cannot be used for parallel drives, N+1, N-1, synchronous transfer and 18 pulse drive configurations.

This feature TÜV certified for use in safety applications up to and including safety integrity level 3 (SIL3) and Category 3, Performance Level e (Cat 3, PLe). More information on functional safety and SIL and PL ratings can be found in the following standards:

- EN 61508
- EN 62061
- EN 61800-5-2
- EN 13849-1

See publication 7000-UM203 for more information that is related to the functional safety option.

Operator Interface

The human-machine interface (HMI) board is an HIM-enabling device for the PowerFlex 7000 drive. The board lets you acquire all the necessary executable tools, documentation, and reports required to commission, troubleshoot, and maintain the drive.

IMPORTANT Any references to HIM can refer to PanelView™ Plus 6 (shipped prior to 2022), or eHIM (shipped from 2022) terminal.

Via the HMI board, the user can choose the style and size of the desired Windows®-based operator terminal to interact with the drive (for example, PanelView Plus 6 Windows CE terminal, eHIM Windows 10 terminal, laptop, or desktop computer). The HMI board removes past issues with compatibility between the drive and configuration tools, as all the necessary tools are acquired from the drive.

The HMI board is well suited for applications that require remote placement of the operator terminal and remote maintenance.

Figure 16 - Operator Interface

PanelView Plus 6[1]

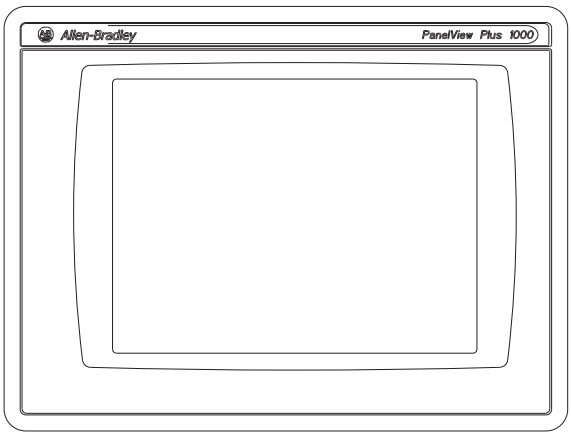

eHIM

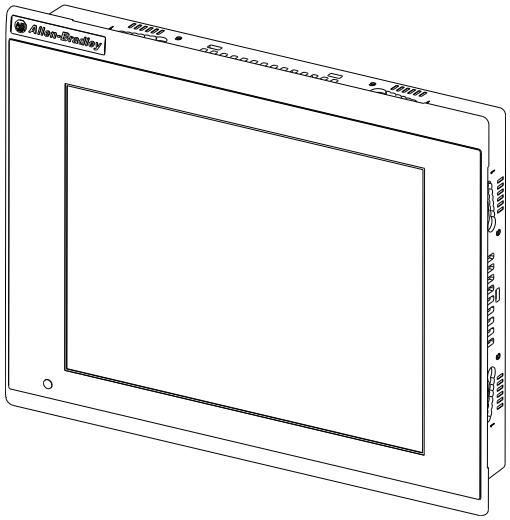

(1) The PanelView Plus 1000 is PanelView Plus 6 with a 10 in. screen.

Basic Configurations

There are three basic configurations for the HIM.

Locally-mounted HIM

IMPORTANT This configuration applies to both the eHIM and PanelView Plus 6 terminal.

The HIM is mounted on the LV door of the VFD. There is also a service access port (RJ-45 connector) on the LV door.

Remote-mounted HIM

IMPORTANT This configuration only available with PanelView Plus 6 HIM.

The HIM is not mounted in the traditional location on the low voltage door of the VFD. A remote mounting plate, complete with E-Stop push button, and HIM is supplied loose for you to mount wherever desired. The HIM connects to the VFD via a hardwired ethernet cable. There is no significant functional distance limitation.

This is ideal for non-PLC users wanting to control and monitor remotely (for example, at the driven machine or control room). This is also ideal if you, for example, have policies in place to control access to medium voltage equipment and the associated requirements of PPE when using the operator interface at the VFD.

No HIM supplied

IMPORTANT This configuration only available with PanelView Plus 6 HIM.

A service access port (RJ-45 connector) is located on the LV door of the VFD. You can use your own laptop as the HIM. All programs required to use the laptop as the HIM are stored in the VFD. Their laptop is connected to the VFD via a hardwired Ethernet cable, when required. This is ideal for unmanned sites, where a dedicated HIM is not required.

See publication 7000-UM201 for detailed instruction for the HIM.

See publication 7000-UM151 for detailed instruction for 'B' frame drives using the PanelView 550 HIM.

Drive Installation

Safety and Codes

ATTENTION: The Canadian Electrical Code (CEC), National Electrical Code (NEC), or local codes outline provisions for safely installing electrical equipment. Installation MUST comply with the specifications for wire type, conductor sizes, branch circuit protection, and disconnect devices. Failure to do so can result in personal injury and/or equipment damage.

Drive Storage

If the drive must be stored, be certain to store the drive in a clean, dry, dust free area.

Storage temperature must be maintained between -40...+70 °C (-40...+158 °F). If storage temperature fluctuates or if humidity exceeds 95%, use space heaters to minimize condensation. Store the drive in a heated building with adequate air circulation. Do not store the drive outdoors.

Siting of the Drive

Site Considerations

The standard environment in which the equipment is designed to operate is:

- Elevation above sea level less than 1000 m (3250 ft).
- Ambient air temperature between 0...40 °C (32...104 °F).
- Relative humidity of the air not to exceed 95% noncondensing.

For the equipment to operate in conditions other than conditions specified consult the local sales office of Rockwell Automation.

The equipment requires the following site conditions:

- Indoor installation only, no dripping water, or other fluids.
- Clean air to cool equipment according to requirements.
- Level floor for anchoring the equipment. See dimension drawings for the location of the anchoring points.
- The room in which the equipment is located must allow for all equipment doors to be fully opened, typically 1200 mm (48 in.). Allow adequate clearance for over the drive for fan removal, greater than 700 mm (27.5 in.).
- Allow the air for cooling, to exit the drive freely at the top. The flow of air for cooling into and out the drive must be kept clear and uninhibited.

- The room in which the equipment is located must be large enough to accommodate the thermal losses of the equipment. The rated maximum air temperature must not be exceeded; air conditioning may be required. The heat created by the drive is directly proportional to the power of the motor being driven and the efficiency of equipment within the room. When thermal load data is required, contact the Rockwell Automation sales office.
- The area in which the drive is located must be free of radio frequency interference such as encountered with some welding units. Radio frequency interference can cause erroneous fault conditions and shut down the drive.
- The equipment must be kept clean. Dust in the equipment decreases system reliability and inhibits equipment cooling.
- Power cable lengths to the motor are unlimited due to the near sinusoidal voltage and current waveforms. Unlike voltage source drives, there are no capacitive coupling, dv/dt, or peak voltage issues that can damage the motor insulation system. The topology that is used in the PowerFlex™ 7000 medium voltage AC drive does not produce dv/dt or peak voltage problems. PowerFlex 7000 has been tested with motors located up to 15 km (9.37 miles) from the drive.
- Only personnel familiar with the function of the drive must have access to the equipment.
- The drive is designed for front access and must be installed with adequate clearance to allow for total door opening. The back of the unit can be placed against a wall although some customers prefer back access also.

ATTENTION: An incorrectly applied or installed drive can result in component damage or a reduction in product life. Ambient conditions not within the specified ranges can result in malfunction of the drive.

Generator Note

ATTENTION: Verify that the load is not turning due to the process. A freewheeling motor can generate voltage that is back-fed to the equipment that is being worked on.

Installation

When the drive has been placed at its installation area:

1. Remove the lag bolts that fasten the shipping skid to the drive.
2. Move the drive off the shipping skid and discard the skid.
3. Position the drive in its desired location.
4. Verify that the drive is on a level surface and that the position of the drive is vertical when the anchor bolts are installed.

   The location of the anchor points is provided with the dimension drawing of the drive.
5. Install and tighten the anchor bolts. (M12 or 1/2 in. hardware required). The engineering bolt systems are required for seismic requirements. Consult the factory.
6. Remove the top lifting angles, retain the hardware.
7. Install the hardware from the lifting angles in the tapped holes at the top of drive. The hardware blocks leakage of cool air and keeps dust out of the equipment.

Shock Indication Labels

Shock indication labels are devices that permanently record the physical shock to which equipment is subjected.

At the time of final preparation for shipment from the factory, a shock indication label is installed on the outside door of the converter cabinet.

During the shipping and installation process, drives can inadvertently be subjected to excess shock and vibration, which can impair its functionality.

When the drive has been placed in its installation area, inspect the shock indication labels on the outside of the door.

The drive is shipped with a label that records shock levels in excess of 10G. If these shock levels have been attained, the chevron shaped window appears blue in one of the two windows.

If the shock indicator is blue, contact Rockwell Automation® Product Support Group in Cambridge, Ontario, Canada. The drive can have internal damage if physical shock was experienced during shipment or installation.

If the indicators show that no shock was attained, full inspection and verification in accordance with the Commissioning process that is outlined in page 187 is still essential.

Figure 17 - Shock Indicator

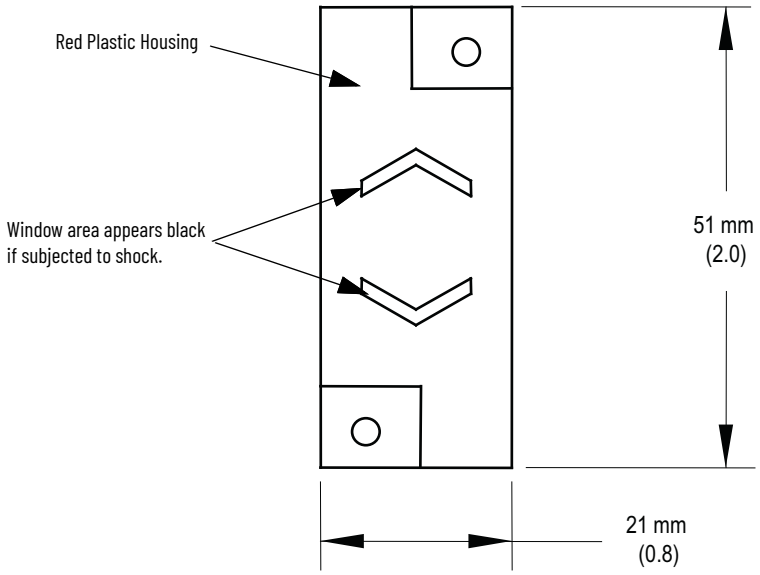

Installation of Exhaust Air Hood

On the top of the cabinet, along with the cooling fan, a sheet-metal exhaust hood is installed. The components to compose the exhaust hood have been packaged and shipped with the drive. For drives with an acoustic hood, the components are shipped assembled. See Figure 19.

1. Remove the protective plate that covers the fan opening on the drive.

   The protective plate is a flat cover plate that is bolted to the top plate.
2. Remove the bolts and plate and set aside for reuse.
3. Loosely assemble the two L-shaped panel components that are shipped with the drive as per Figure 18.

Figure 18 - Fan Hood Assembly

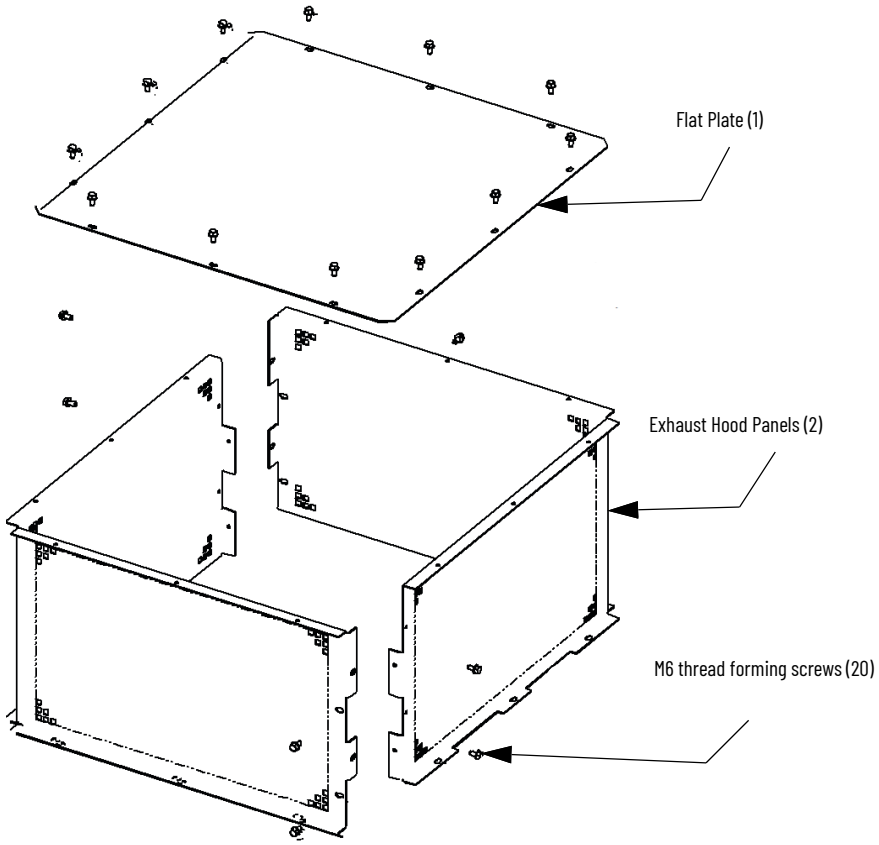

Figure 19 - Acoustic Fan Hood Assembly

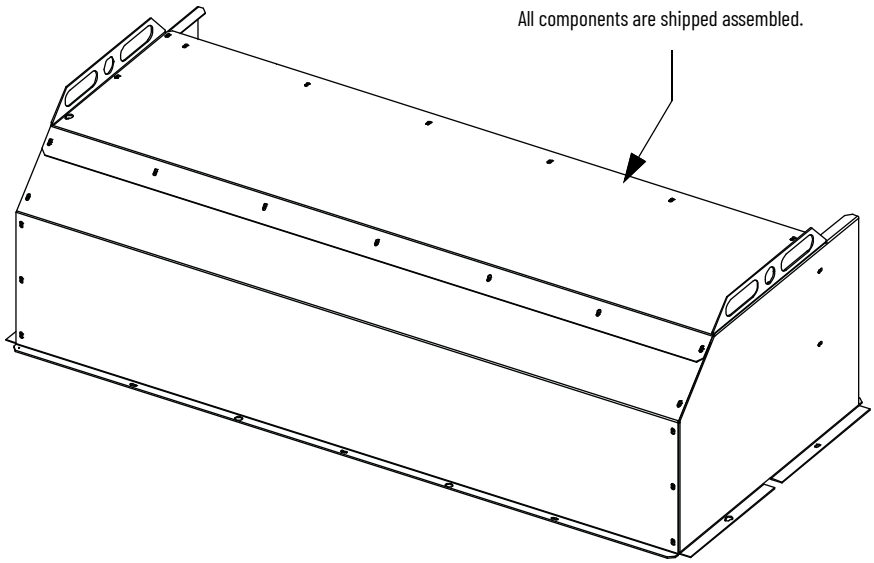

4. Locate the exhaust hood on top of the cabinet per Figure 20 and reinstall the original cover plate that was set aside.

   Care must be taken that the notches on the bottom flange are oriented toward the sides of the drive.
5. Affix assembly to the drive top plate.
6. Tighten all hardware.

For drives with an acoustic hood (shown in Figure 19), locate the exhaust hood (refer to Figure 21).

ATTENTION: Any screws that are accidentally dropped in the equipment must be retrieved as damage or injury can occur.

Figure 20 - Fan Hood Installation

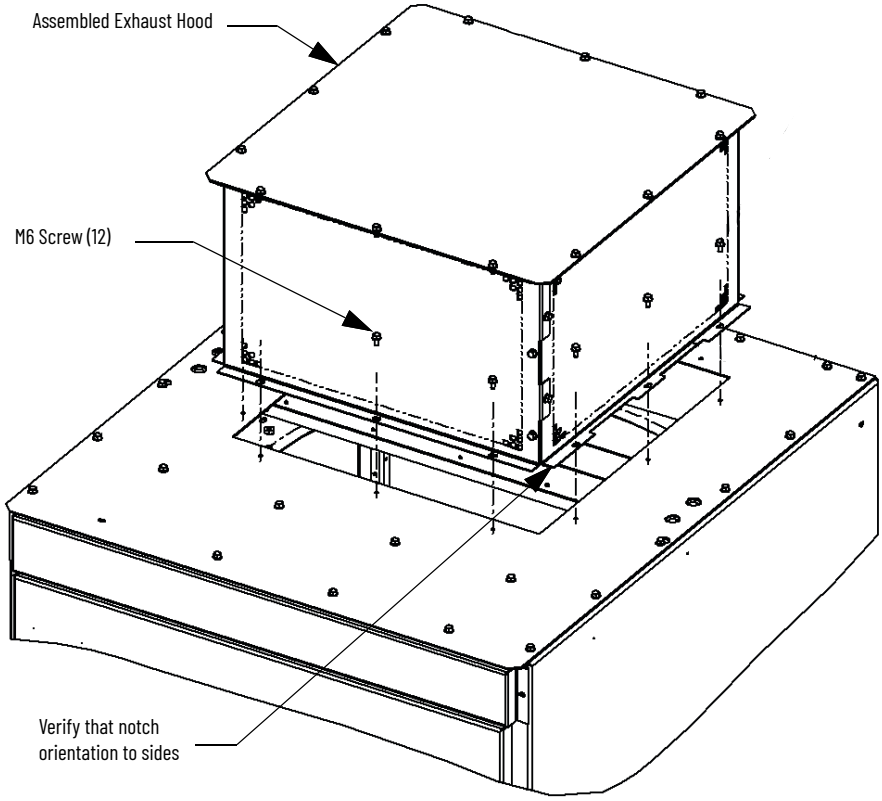

Figure 21 - Acoustic Fan Hood Installation

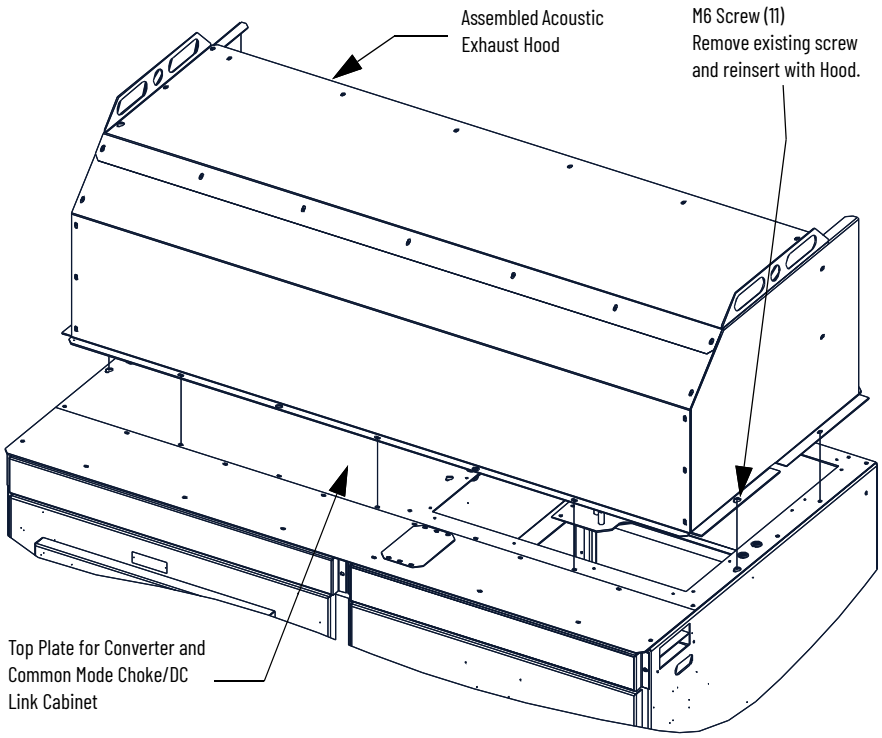

Installation of Redundant Fan Assembly

There are three redundant fan assemblies available. The redundant fan components are shipped assembled (Figure 22).

Figure 22 - Redundant Fan Assemblies

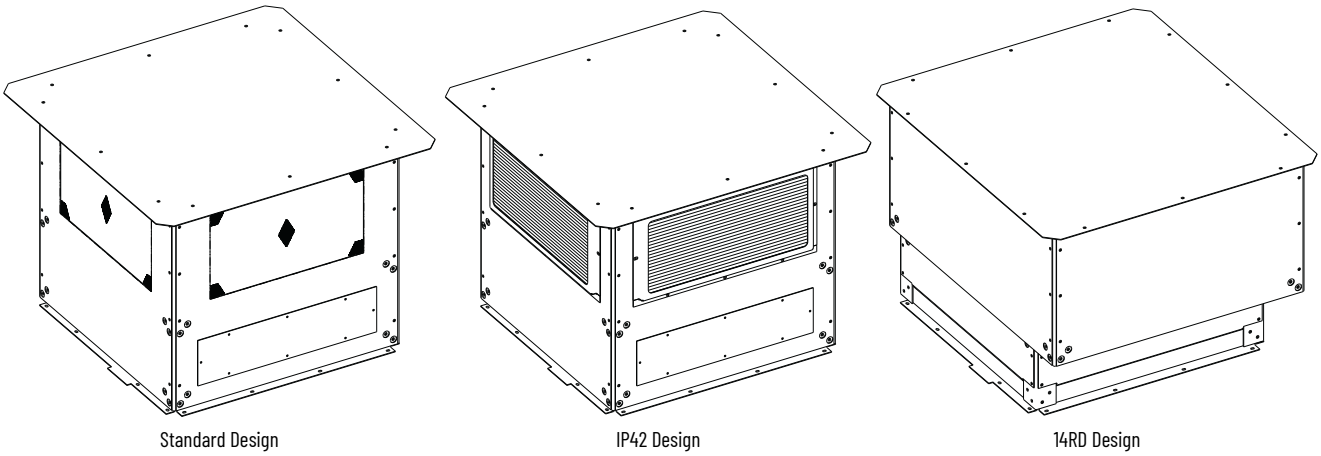

1. Remove and discard the protective plate and associated hardware that covers the fan opening on the cabinet.
2. Remove the top cover of the fan housing and set the top cover aside.
3. Remove the shipping cover plate on the bottom of the redundant fan assembly and discard.
4. Position the assembly over the opening, verify that the locating hole on the housing base aligns with the front right side of the cabinet.
5. Align the mounting holes and wire harness connections.

Figure 23 - Redundant Fan Assembly Orientation

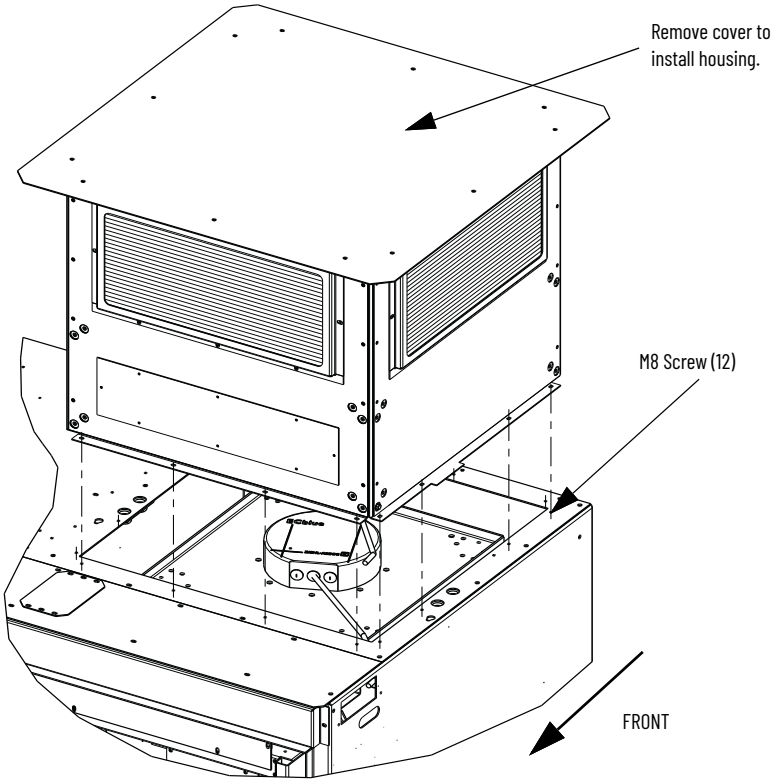

6. Affix the redundant fan assembly to the drive top plate with the M6 thread screws provided.
7. Connect the fan wire harness to fan.
8. Reinstall the top cover onto the fan housing and tighten all hardware.

Installation of Integral Transformer Cooling Fan

1. Remove and discard the protective plate that is covering the opening for the fan on the top of Isolation Transformer cabinet.
2. Locate the cooling fan on top of the cabinet. Position the cooling fan over the opening and align the mounting holes and wire harness connections.
3. Affix the fan to the drive top plate with the M6 screws provided.
4. Connect the wire harness to fan.

Figure 24 - Fan Installation for Integral Isolation Transformer

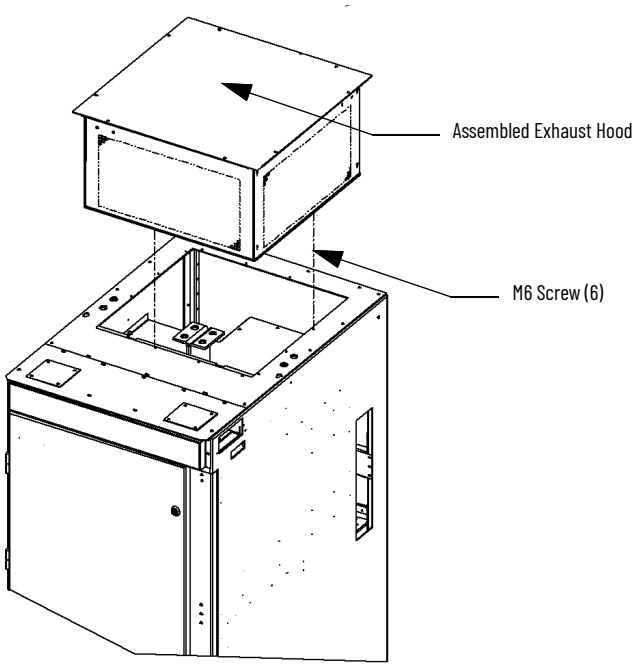

Neutral Resistor Assembly

Figure 25 - Hood Assembly for Neutral Resistor

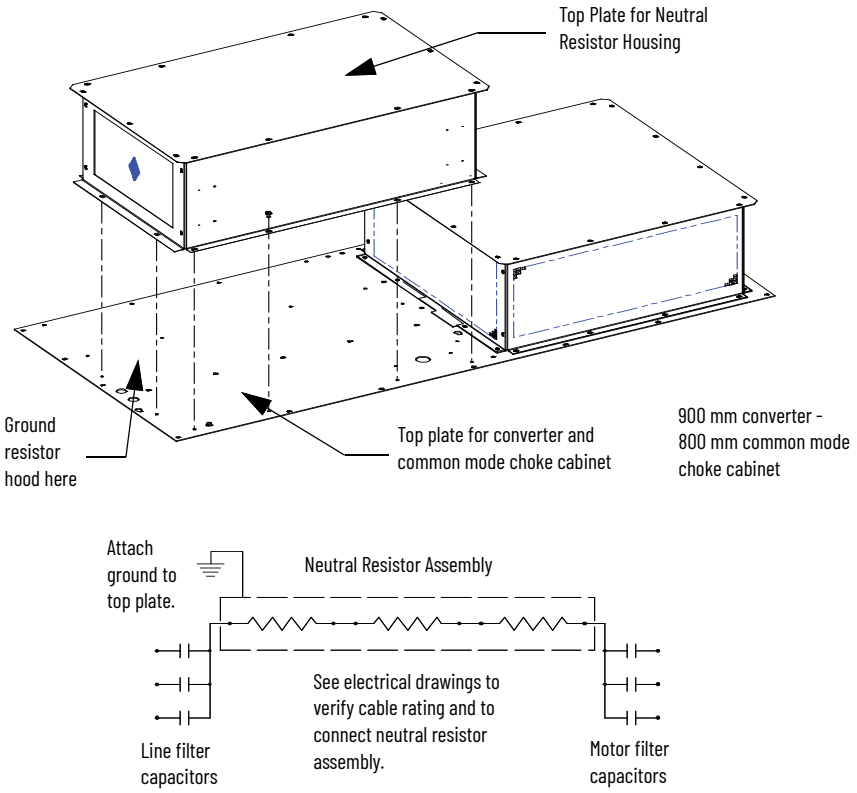

Figure 26 - Acoustic Hood Assembly for Neutral Resistor

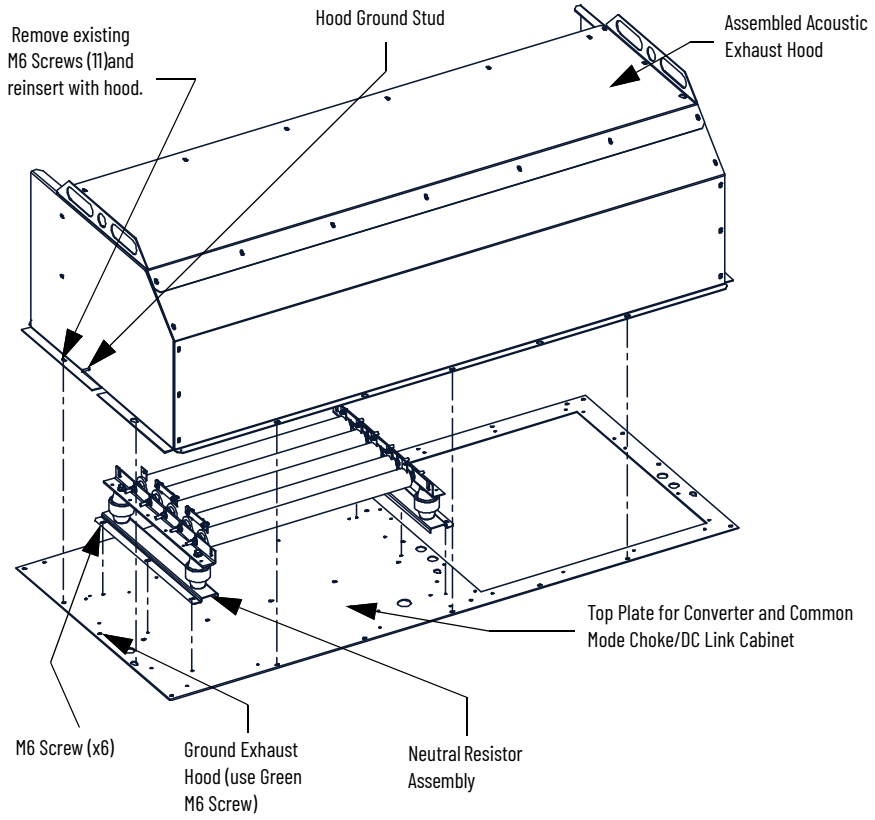

Installation of Neutral Resistor Assembly (Direct-to-Drive)

On top of the converter cabinet, install the sheet metal enclosure that contains power resistors.

1. Locate the resistor assembly on top of the cabinet as shown in Figure 25 (For acoustic hood assembly, refer to Figure 26).
2. Affix the assembly to the top plate using M6 screws provided.
3. Remove the top plate of the resistor assembly for access to the wiring connection points.
4. Connect the resistor wiring according to the electrical drawing that is provided with the drive. A typical connection diagram is shown in Figure 25.
5. Route the resistor wiring through the hole with a plastic bushing. Avoid damaging the wire insulation.
6. Connect the ground connection of the housing for the neutral resistor assembly to the top plate of the drive.
7. Reinstall the top plate of the neutral resistor housing.

Cabinet Layout and Dimensional Drawings of Drive

The dimension drawing (Figure 27) is a sample and does not accurately detail your drive. The dimension drawing is provided here to give you a general overview of a typical drive.

The Dimensional Drawings are order-specific and shows the information that is outlined.

The dimension drawing provides important information for the installation of the equipment.

The **FLOOR PLAN** shows:

- The locations for anchoring the equipment to the floor (balloon D).
- Size and location of bottom openings for the power cable entry (balloons A and B).
- Size and location of the bottom openings for the control wiring entry (balloon C).

The **ROOF PLAN** shows:

- Size and location of the top openings for the power cable entry (balloons A and B).
- Size and location of the top openings for the control wiring entry (balloon C).
- Minimum aisle clearance in front of equipment (balloon M).

The **FRONT VIEW** shows:

- Minimum clearance that is required at top of drive for fan maintenance (balloon K).

Figure 27 - PowerFlex 7000 "A" Frame Dimensional Drawing

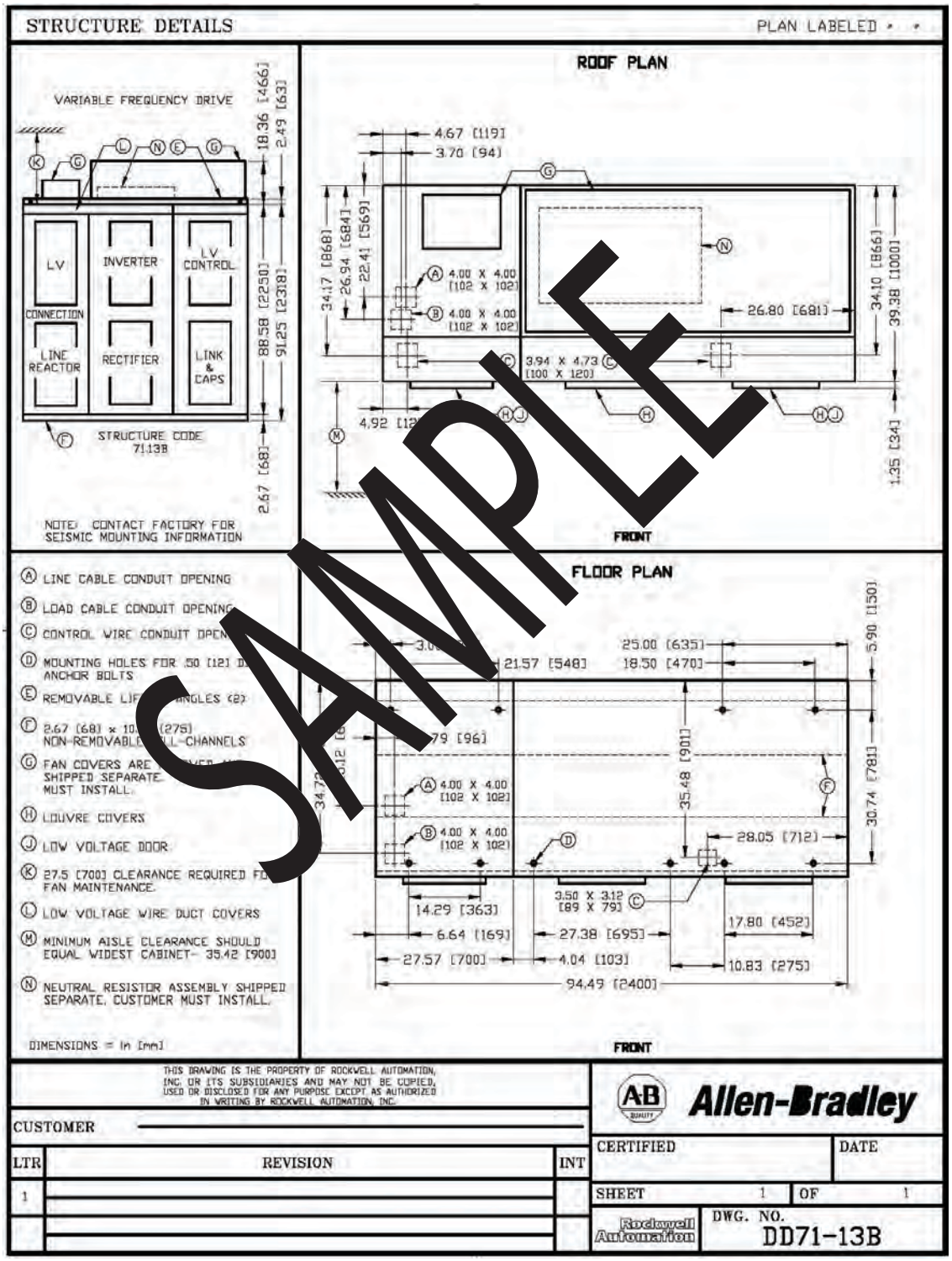

IMPORTANT Contact Factory for Seismic Mounting Information.

Drive Layout

Figure 28 ... Figure 30 show the typical layout of the three main configurations of the PowerFlex 7000 "A" frame drive.

Figure 28 - Direct-to-Drive™ (AFE with DTD DC Link)

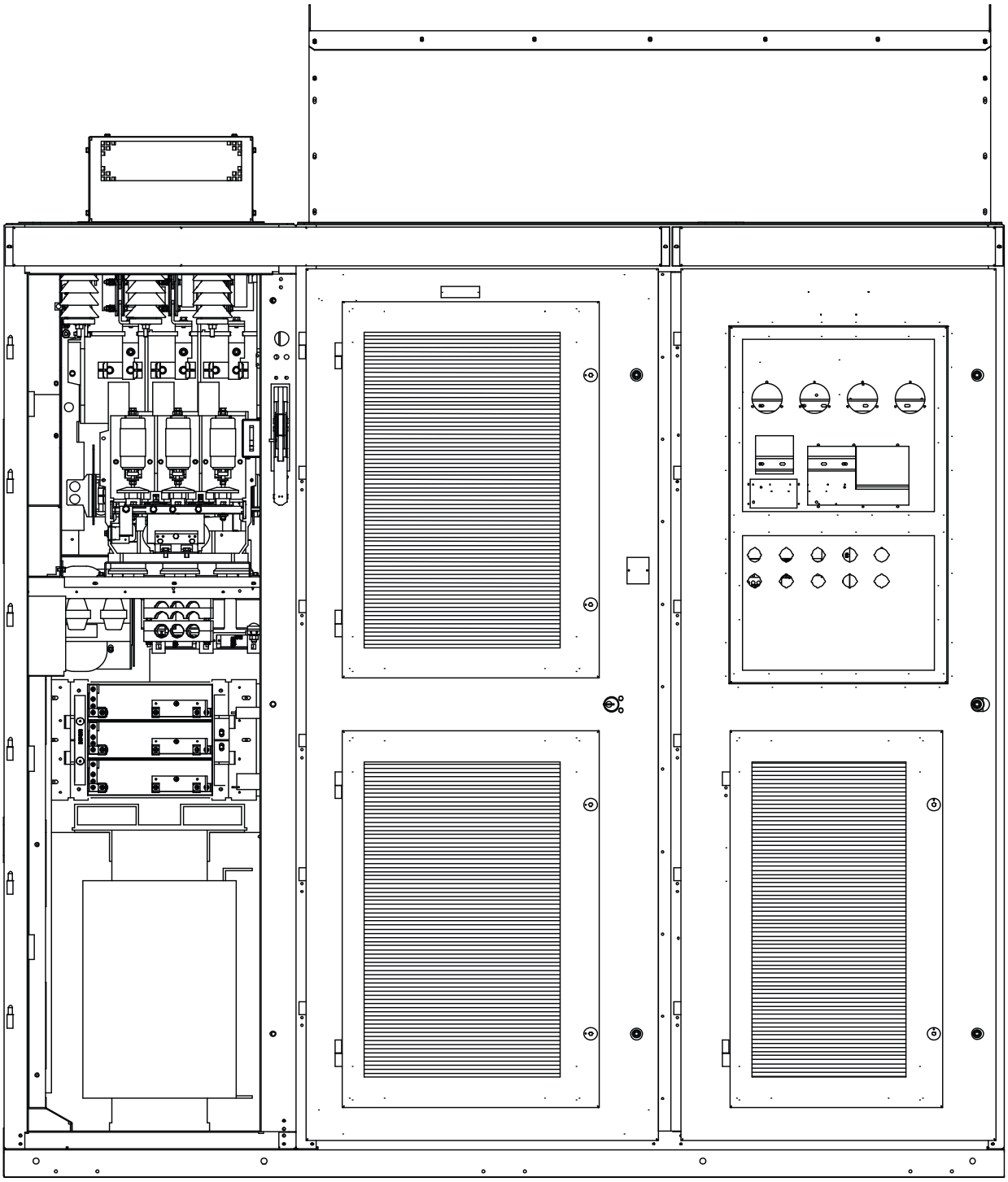

Figure 29 - AFE Rectifier (Separate Isolation Transformer)

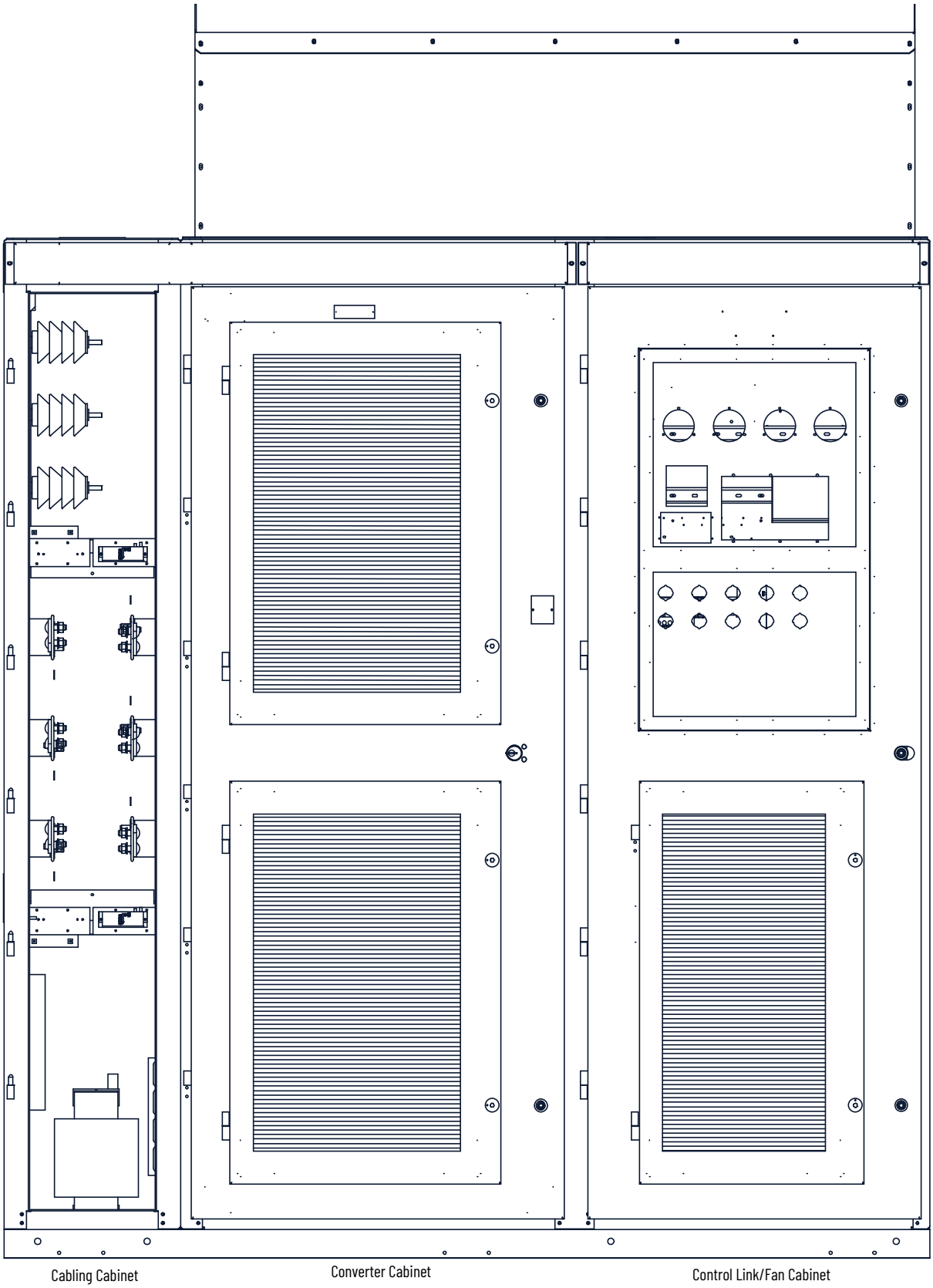

Figure 30 - AFE Rectifier (Integral Isolation Transformer)

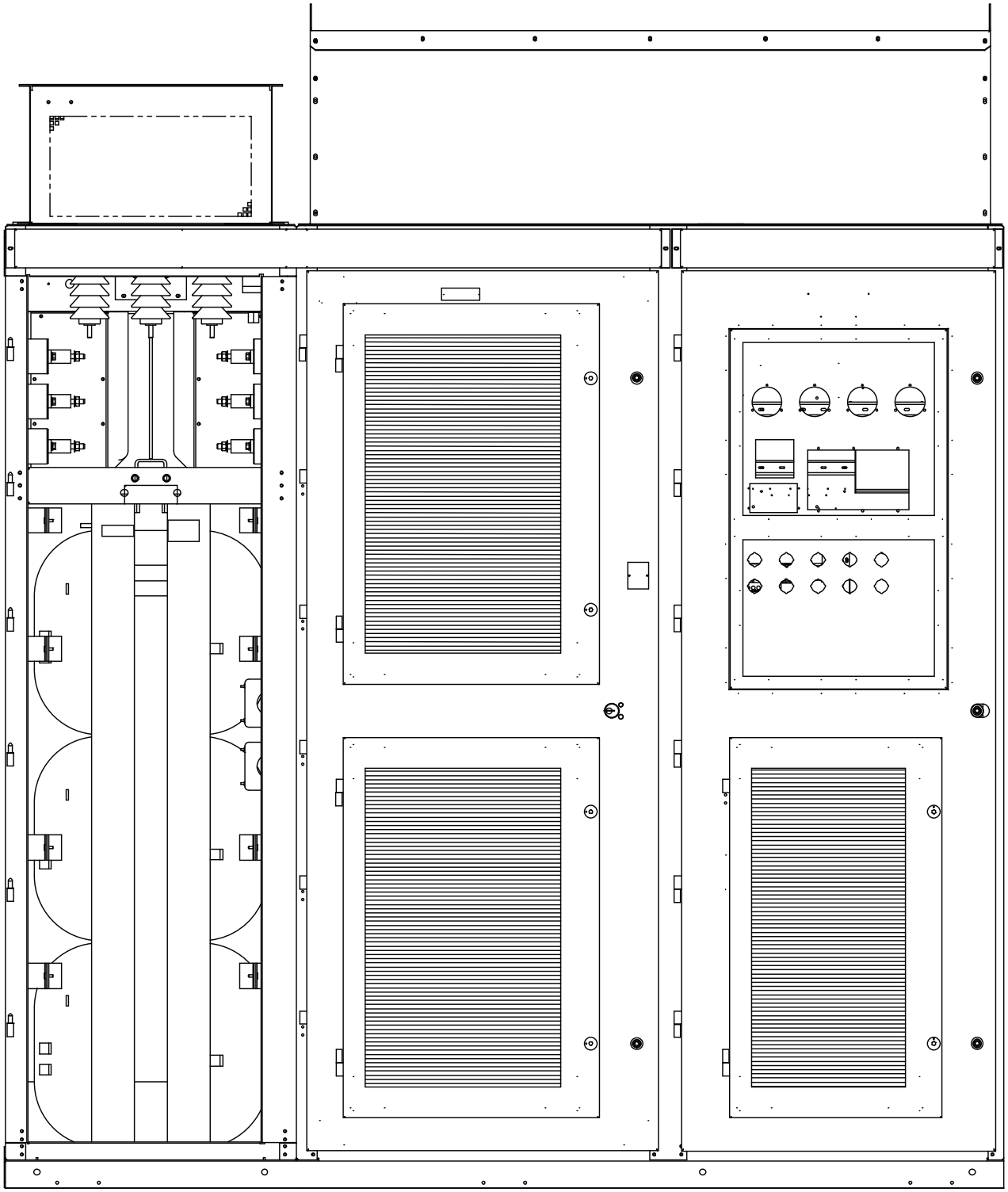

Isolation Transformer and Cabling Cabinet

Converter Cabinet

Control Link/Fan Cabinet

IEC Component and Device Designations

PowerFlex 7000 MVD electrical drawings use conventions that are based on IEC (International Electrotechnical Commission) standards, while remaining compatible with North American ANSI (American National Standards Institute) standards. The symbols that are used to identify components on the drawings are international. A full listing of the symbols is given as part of each PowerFlex 7000 electrical drawing (ED) set. The device designations that are used on the drawings and labels are also listed with explanations on each drawing set.

The identification of wiring uses a source/destination wire number convention on point-to-point multi-conductor wiring and in situations where the system is warranted. The wire-numbering system of unique, single numbers for multi-drop and point-to-point wiring continues to be used for general control and power wiring. The wiring that connects between the sheets or that ends at one point and starts at another point on a drawing has an arrow and a reference to a drawing. The arrow and reference indicate the ongoing connection. The drawing reference indicates the sheet and the X/Y coordinates of the continuation point. The reference system is explained on a sheet in each drawing set. The system for unique wire numbers serves as confirmation that the correct wire is being traced from sheet to sheet or across a drawing. Typically wires are identified with color rather than by number, in multi-conductor cables. The abbreviations that are used to identify the colors on the drawings are fully identified on a sheet in the drawing set.

Power Cabling Access

The drive is designed for the power cable to enter from either the top or bottom.

Cable access plates are on the top and bottom plates of the connection cabinet and identified by the customer-specific dimension drawing (DD).

Access the Customer Power Cable-terminations

Cable connections are located behind the medium voltage door of the Connection/Cabling cabinet. Locations of power terminals for various drive configurations are indicated in Figure 31 through Figure 34.

To facilitate the routing of line cables when cabling a cabinet with starter, remove internal barriers and duct covers on the left side of the cabinet.

1. Remove and retain the hardware from the barrier/cover.
2. Side barrier/cover toward the front of the cabinet for removal.
3. To allow routing and termination of line cables, remove the fan housing and cover plate (if installed) on the top of the cabinet,
4. Replace all barriers/covers by reversing the sequence, before applying medium voltage.

The installer is responsible for modifying the plate for power cable access, to suit their requirements.

Appropriate connectors must be used to maintain the environmental rating of the enclosure.

Power Connections

The installer must verify that interlocking with the upstream power source has been installed and is functioning.

The installer is responsible for verifying that power connections are made to the equipment in accordance with local electrical codes.

The drive is supplied with provision for cable lugs. The power terminals are identified as follows:

Line/Motor Terminations

- Drives with Connection to remote transformers: 2U, 2V, 2W
- Drives with integral transformers: 1U, 1V, 1W
- Drives with integral line reactor and input starter: L1, L2, L3
- Motor Connections: U, V, W
- Drives with integral line reactor, no input starter: 1U, 1V, 1W

Installation Requirements for Power Cabling

To determine cable distance from top or bottom of input cabinet to termination points, refer to Figure 31, Figure 33 and Figure 34.

The installer is responsible for verifying that power connections are made with appropriate torque (see page 175).

The drive is supplied with provision for grounding of cable shields and stress cones near the power terminals.

Figure 31 - Dimension Views of Direct-to-Drive™ (AFE with DC Link) *with* Input Starter

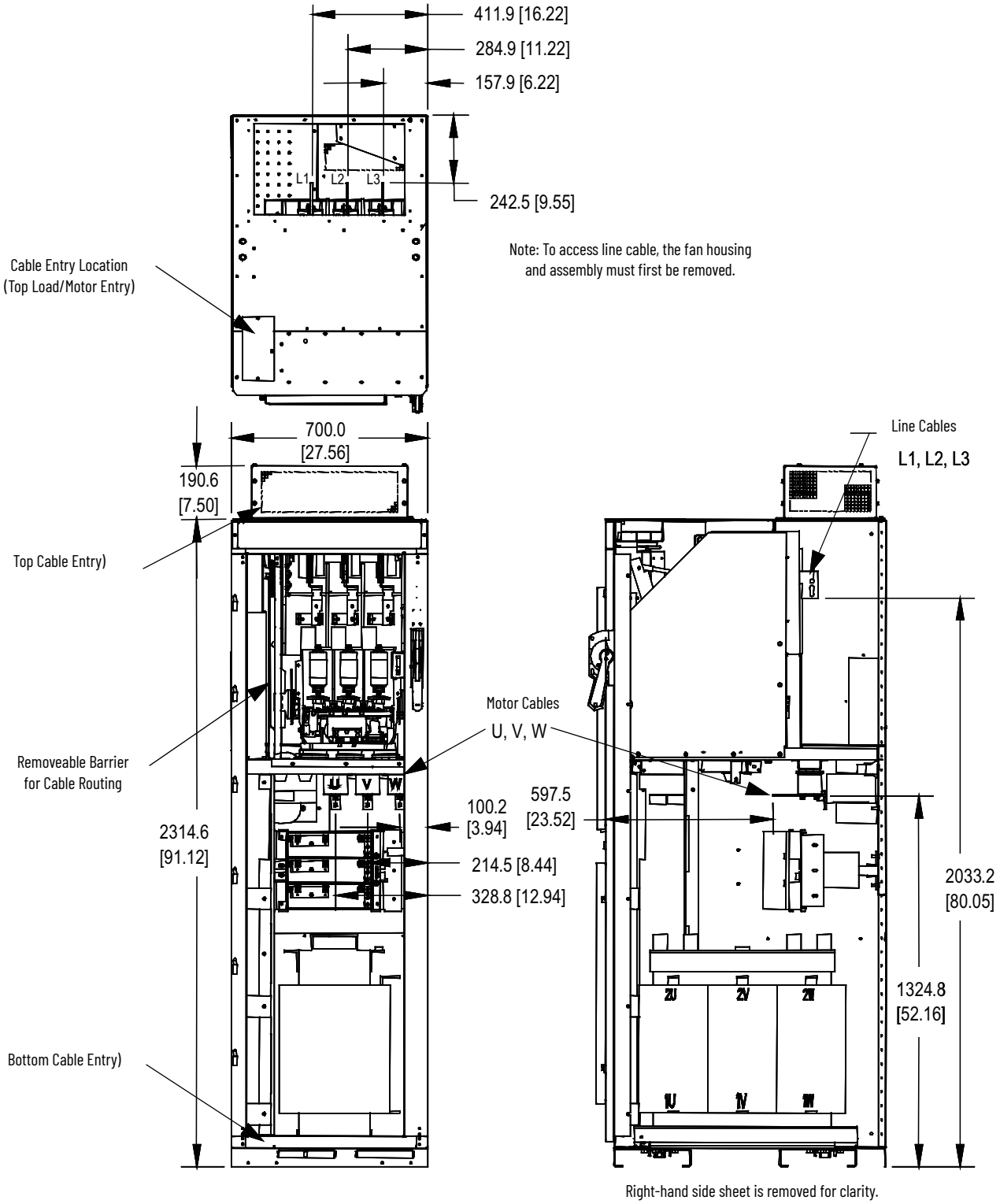

Figure 32 - Dimension Views of Direct-to-Drive™ (AFE with DC Link) *without* Input Starter

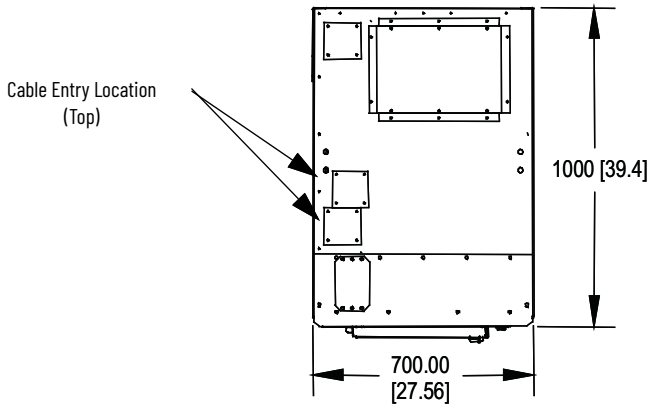

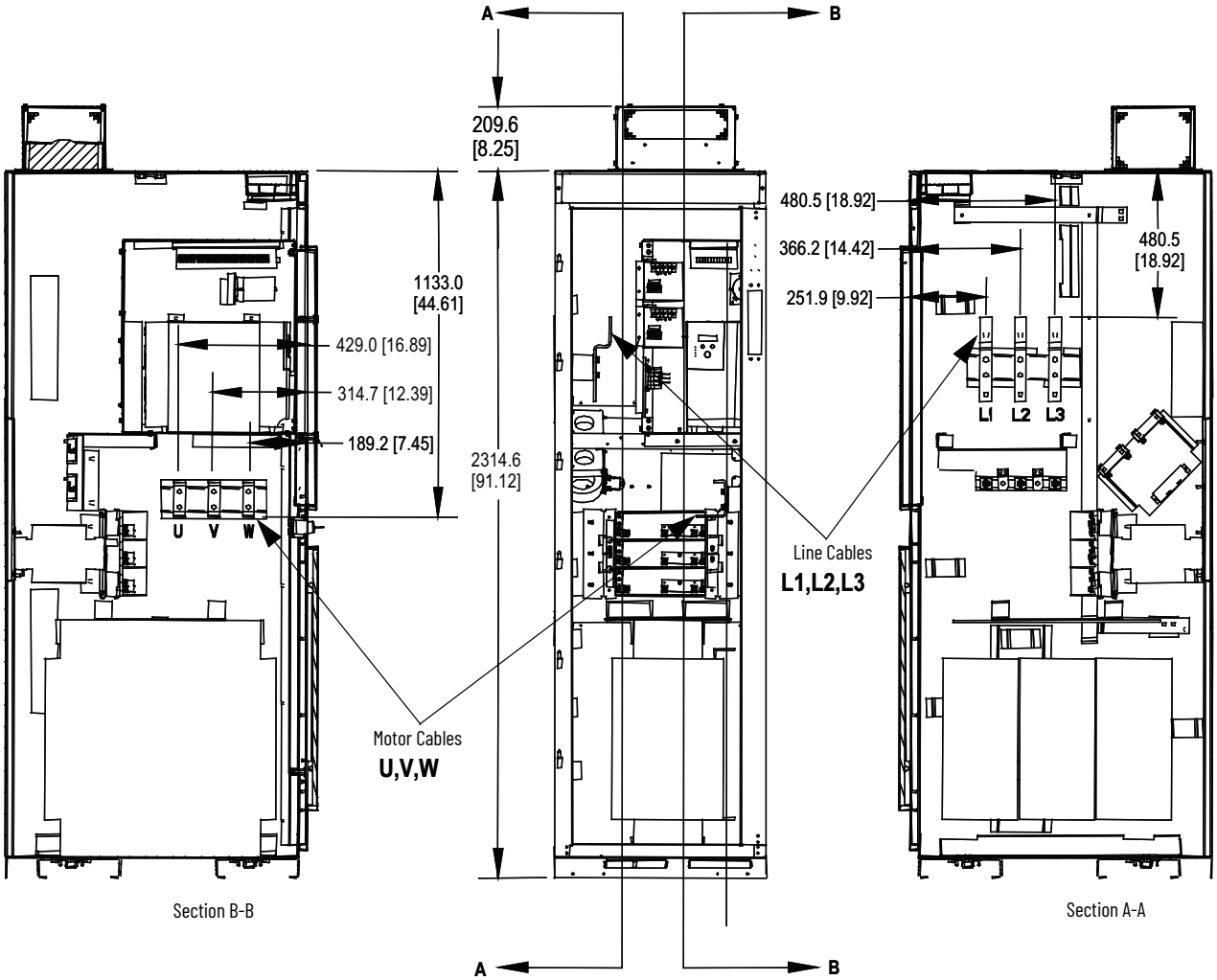

Figure 33 - Dimension Views of AFE Rectifier with Separate Isolation Transformer

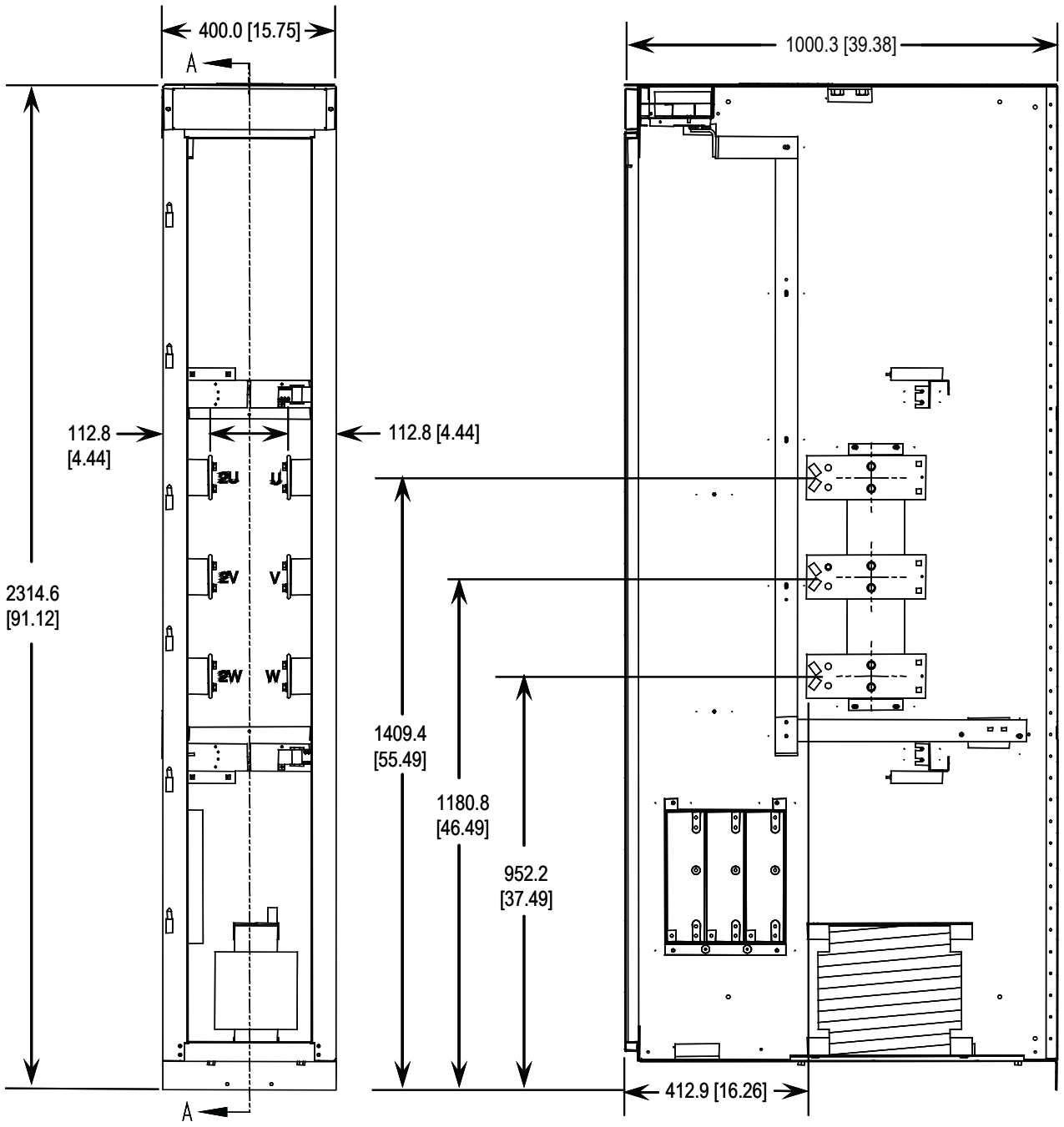
400.0 [15.75]
A
1000.3 [39.38]
112.8
[4.44]
112.8 [4.44]
2U
U
2V
V
2W
W
2314.6
[91.12]
1409.4
[55.49]
1180.8
[46.49]
952.2
[37.49]
412.9 [16.26]
A

Section A-A

Figure 34 - Dimension Views of AFE Rectifier with Integral Isolation Transformer

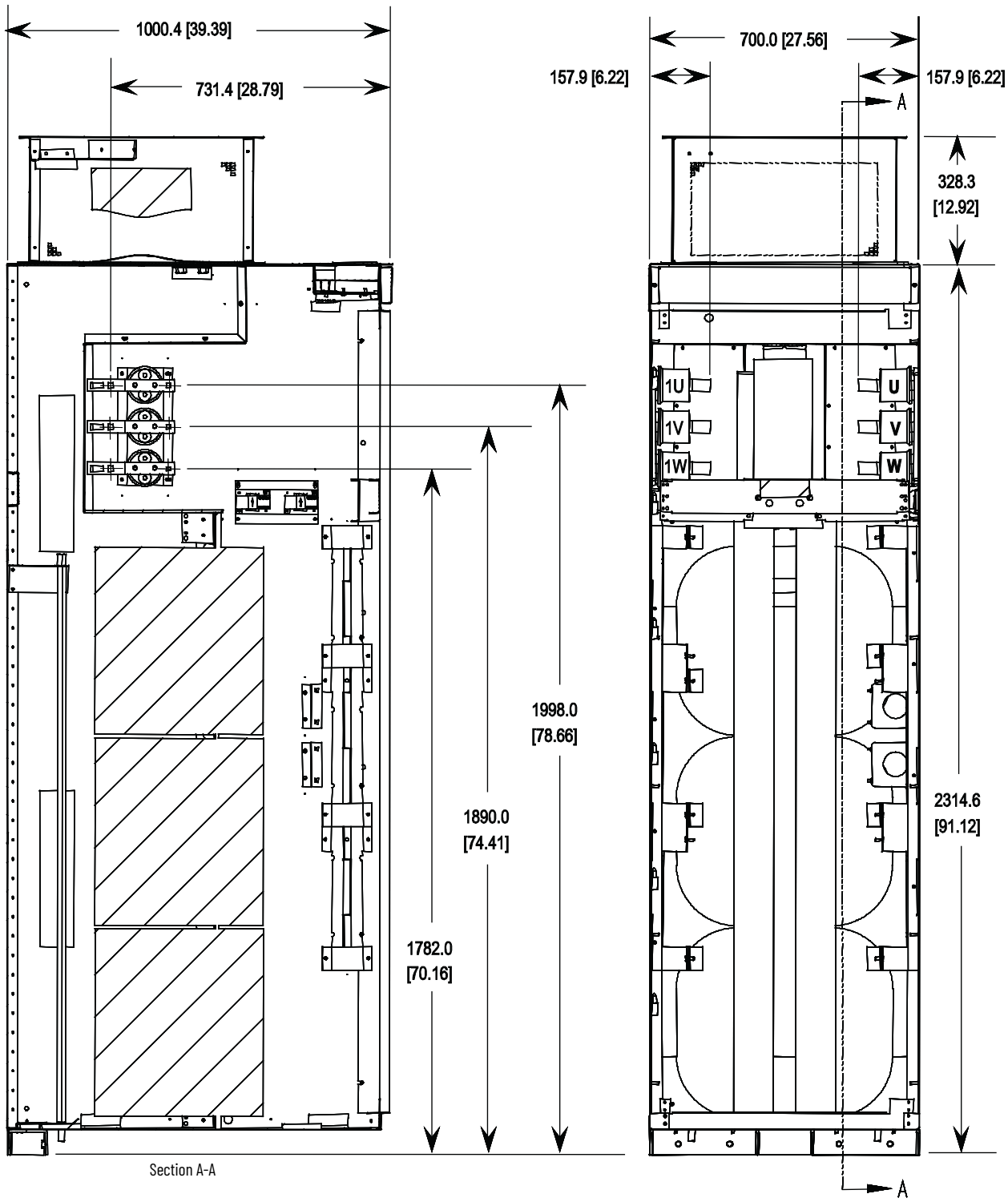

Power and Control Wiring

Drive line-ups (for example, a drive and input starter) that are delivered in two or more sections must be reconnected. After the sections are reassembled, the power and control wiring must be reconnected as per the schematic drawings provided.

Control Cables

Control cable entry/exit must be located near the terminal block 'TBC' – route the customer connections along the empty side of the TBC terminals. These terminals are sized to accept a maximum #14 AWG. Connect the low voltage signals (includes 4...20 mA0). Use twisted shielded cable, with a minimum #18 AWG.

Of special concern is the tachometer signal. Two tachometer inputs are provided to accommodate a quadrature tachometer (senses motor direction). The tachometer power supply is isolated and provides 15V and a ground reference. Many tachometer outputs have an open collector output, in which case a pull-up resistor must be added to make sure that proper signals are fed to the system logic.

IMPORTANT To connect low voltage signals, use twisted shielded cable with the shield that is connected at the signal source end only. Wrap the shield at the other end with electrical tape and isolated. Make connections as shown on the electrical drawings (ED) provided.

Grounding Practices

The purpose of grounding is to:

- Provide for the safety of personnel.
- Limit dangerous voltages on exposed parts concerning ground.
- Facilitate proper over current device operation under ground fault conditions.
- Provide for electrical interference suppression.

IMPORTANT Generally, external grounding of equipment must be in accordance with the Canadian Electrical Code (CEC), C22.1 or the National Electrical Code (NEC), NFPA 70 and applicable local codes.

See the grounding diagrams that follow for ground connections. The main ground bus of the drive must be connected to the system ground. This ground bus is the common ground point for all grounds internal to the drive.

Figure 35 - Ground Connection Diagram with Isolation Transformer

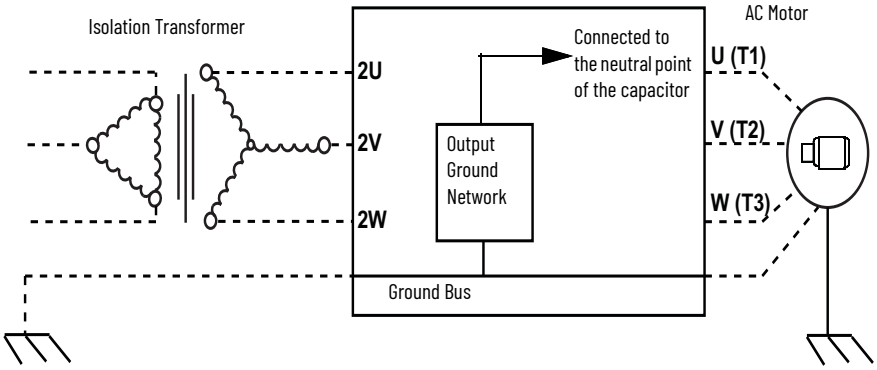

Figure 36 - Ground Connection Diagram with Line Reactor

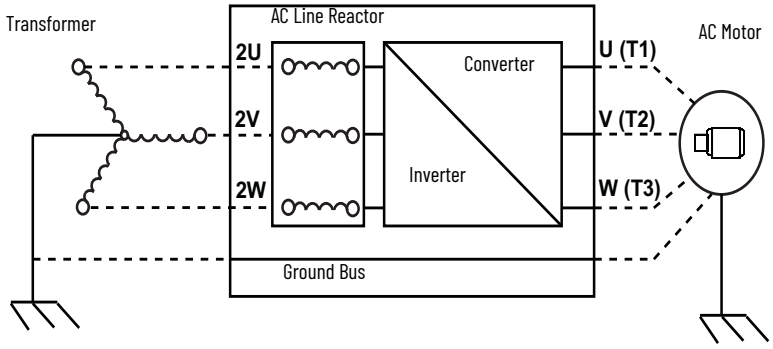

Each power feeder from the substation transformer to the drive must be provided with properly sized ground cables. Do Not use the conduit or cable armor as a ground.

If a drive isolation transformer is used, the WYE secondary neutral point must not be grounded.

Each AC motor frame must be bonded to grounded steel of a building, within 6 m (20 ft) of its location. Tied the motor frame to the drive ground bus by way of ground wires within the power cables and/or conduit. The conduit or cable armor must be bonded to ground at both ends.

Drive Signal and Safety Grounds

When interface cables that carry signals (where the frequency does not exceed 1 MHz) are attached for communications with the drive, these general guidelines must be followed:

- Do not form a pigtail that is grounded at one point. Ground the mesh of a screen around its whole circumference.
- Coaxial cables with one conductor and a mesh screen that surrounds it, must have the screen that is grounded at both ends.
- Where a multi-layer screened cable is used (that is, a cable with both a mesh screen and a metal sheath or some form of foil), there are two alternative methods:
  - The mesh screen can be grounded at both ends to the metal sheath. The metal sheath or foil (known as the drain) must, unless otherwise specified, be grounded at one end only. Ground at the receiver end or the end that is physically closest to the main-equipment ground bus.

- The metal sheath or foil can be left insulated from ground and the other conductors and the mesh cable screen that is grounded at one end only.

For Customers and Power Integrators

An external ground must be attached to the main ground bus. The grounding means must comply with applicable local codes and standards. As general guidelines, for information only, the ground path must be of sufficiently low impedance and capacity that:

- The rise in potential of the drive ground point when subjected to a current of twice the rating of the supply must be no higher than 4V over ground potential.
- The current flowing into a ground fault is of sufficient magnitude to cause the protection to operate.

The main grounding conductor must be run separately from power and signal wiring so that faults:

- Do not damage the grounding circuit.
- Do not interfere with or damage, protection, or the metering systems. Or cause undue disturbance on power lines.

Identification of Types of Electrical Supplies - Grounded and Ungrounded Systems

With an ungrounded, three-phase electrical supply system, the cable insulation must handle the phase to phase voltage and the voltage to ground. This guideline is in case one of the other phases develops a ground fault. The cable insulation, at minimum, must be good for a continuous voltage of root three (1.732) times (1.1) times the rated voltage of the supply.
(1.732 x 1.1 = 1.9 times the rated line-to-line voltage).

Ground Bus

The drive ground bus runs along the top of the drive at the front. The ground bus is at the top of each of the drive enclosures. The ground bus is accessible when the enclosure door is opened (and the low voltage compartment is hinged out in the case of the DC link/fan cabinet). The installer must verify that the drive is grounded properly, typically at the point on the ground bus in the cabling cabinet, close to the line cable terminations.

Interlocking

Key interlocking, is used for safety and to restrict access to the medium voltage areas of the drive. The upstream power must be locked in the off position for access to the medium voltage compartments of the equipment.

The key interlocking prohibits the upstream power being applied, until the access doors of the medium voltage drive are closed and locked shut.

It is the responsibility of the installer to verify that the key interlocking is installed properly to the upstream equipment.

Notes:

Power Component Definition and Maintenance

Cabling Cabinet Components

Figure 37 - Direct-to-Drive with UPS Option

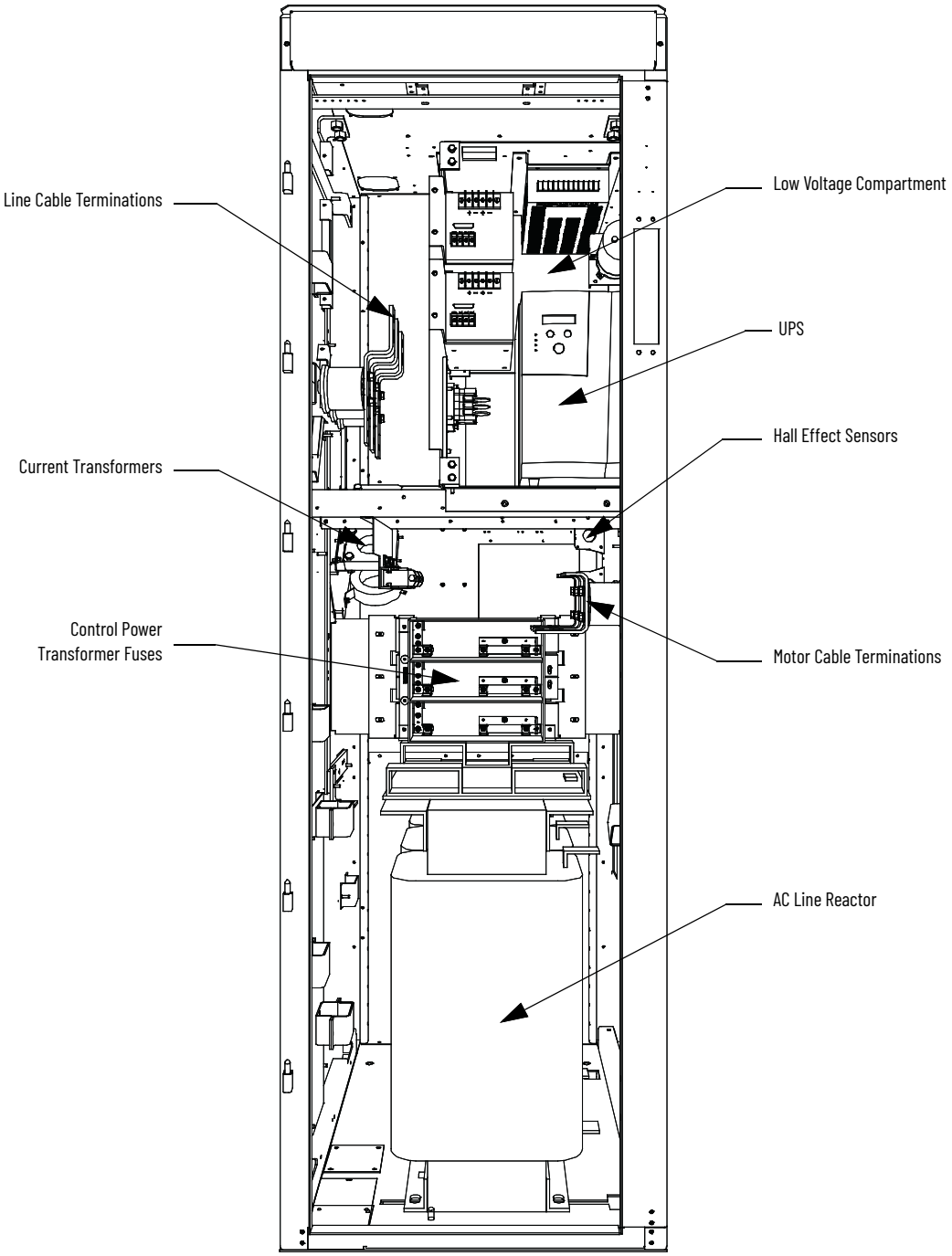

Figure 38 - Direct-to-Drive with Optional Input Starter

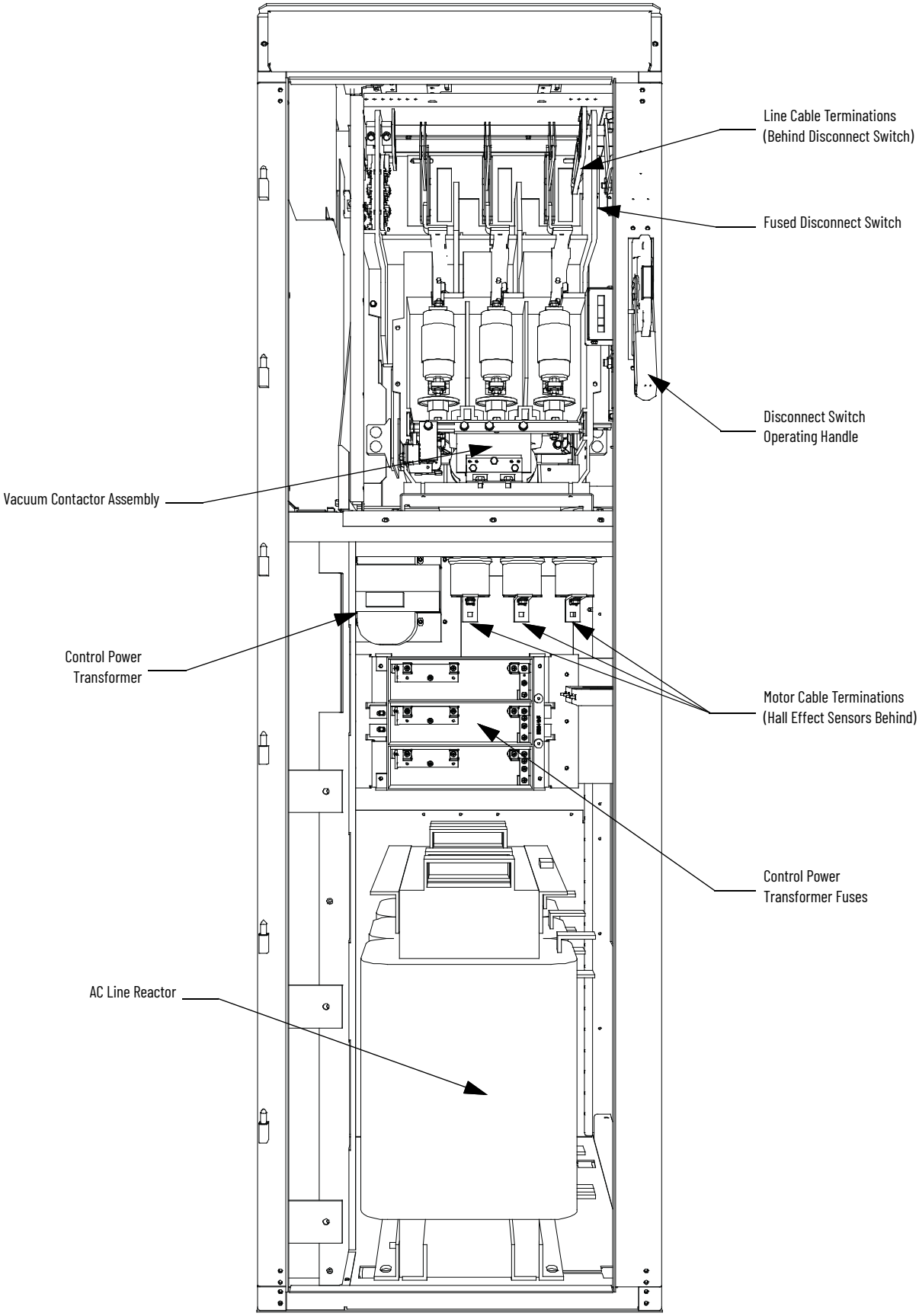

Figure 39 - AFE Rectifier with Isolation Transformer

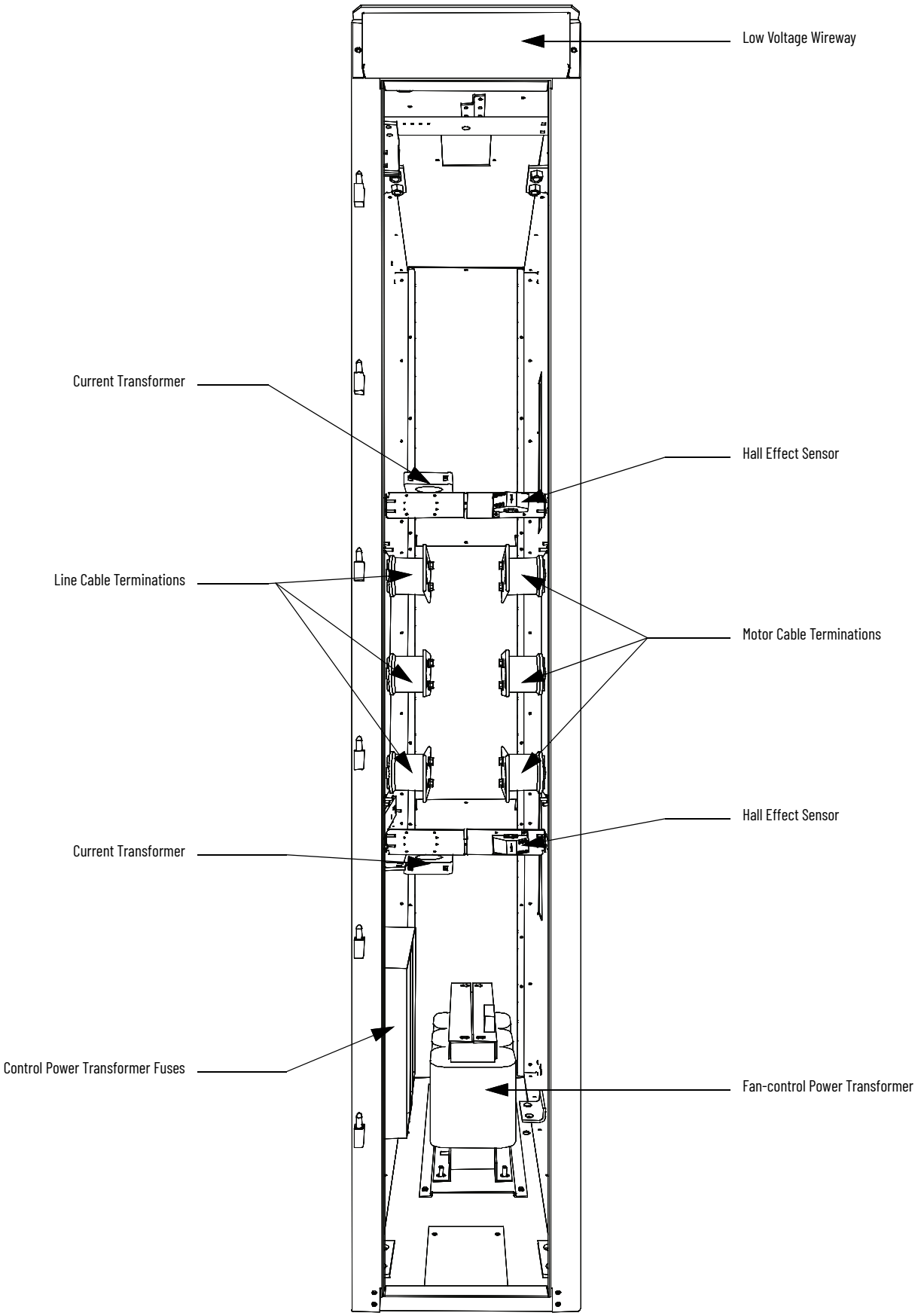

Figure 40 - AFE Rectifier with Integral Isolation Transformer

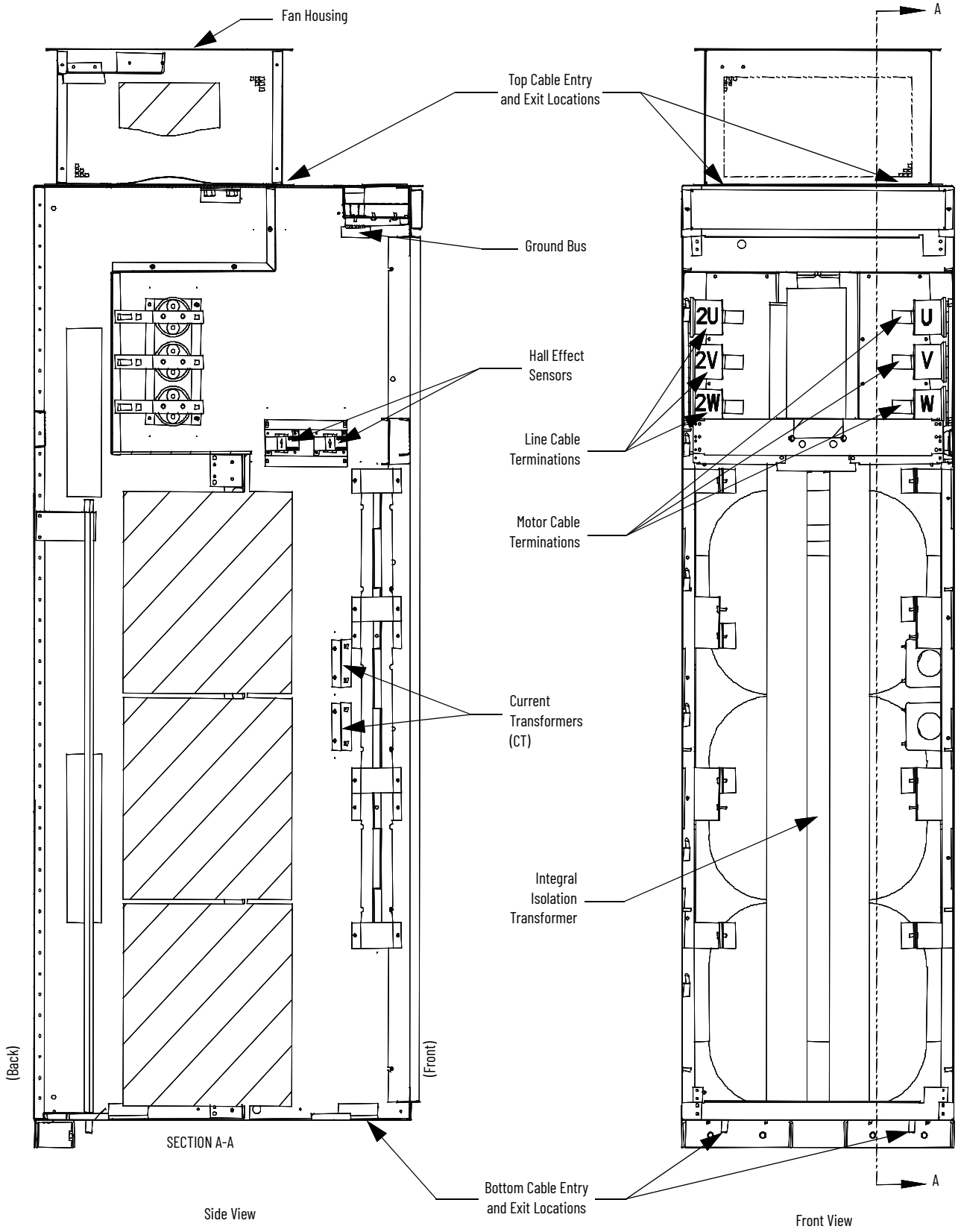

Hall Effect Sensor Replacements

1. Verify that there is no power to the equipment.

ATTENTION: To avoid electrical shock, verify that the main power has been disconnected before working on the Hall Effect sensor. Verify that all circuits are voltage free. Use a hot stick or appropriate voltage-measuring device. Failure to do so can result in injury or death.

2. Note the location of all wires and the orientation of the Hall Effect sensor. For quick reference when checking the orientation of the Hall Effect sensor, look for the white arrow.

IMPORTANT The Hall Effect sensor and wires must be in the proper orientation. Note the position before disassembly.

3. The load cable must be disassembled to allow removal of the Hall Effect sensor. Remove the hardware and slide out the cable out.
4. Remove the plug that connects the sensing wire to the Hall Effect sensor.
5. Remove the four screws on the base of the Hall Effect sensor, and remove the Hall Effect sensor.
6. Replace the Hall Effect sensor. The arrow must be oriented as shown in Figure 41.
7. Slide the load cable back into place and secure the hardware.
8. Plug the connector back into the sensor. The plug is keyed to avoid incorrect connection.

Figure 41 - Hall Effect Sensor (Located Within Cabinet with Detail)

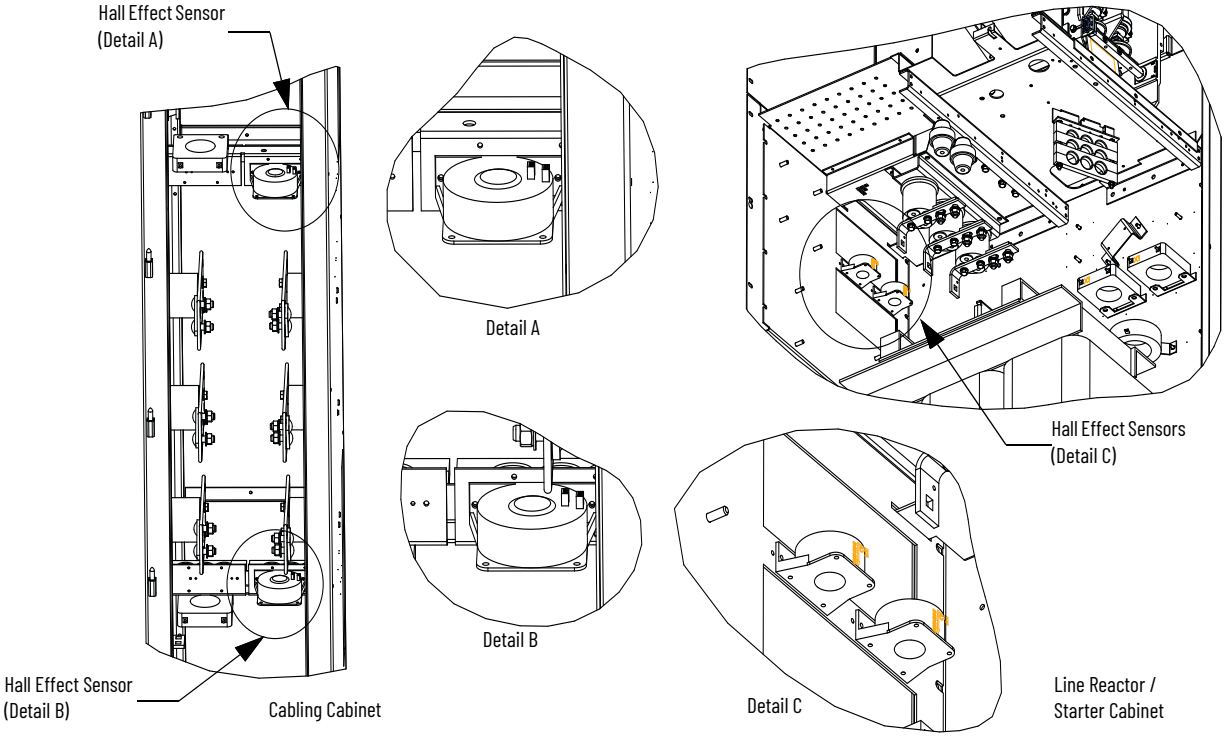

Current Transformer Replacement

1. Verify that there is no power to the equipment.

ATTENTION: To avoid electrical shock, verify that the main power has been disconnected before working on the current transformer. Verify that all circuits are voltage free. Use a hot stick or appropriate voltage-measuring device. Failure to do so can result in injury or death.

2. Note the location of all wires and the orientation of the CT. For quick reference when checking the orientation of the CT, look for the white dot.

IMPORTANT The CT and wires must be in the proper orientation. Note the position before disassembly.

3. Disconnect the wires.
4. The line cable must be disassembled to allow removal of the CT.
5. Remove the hardware and slide the cable out.
6. Remove the two screws that are located in the base of the CT and remove the CT.
7. Replace the CT.
8. Verify the proper orientation.
9. Fasten the CT securely with the two screws in the base.
10. Reconnect the ring lugs.
11. Slide the line cable back into place
12. Secure the hardware.

Figure 42 - Replacement of Current Transformer

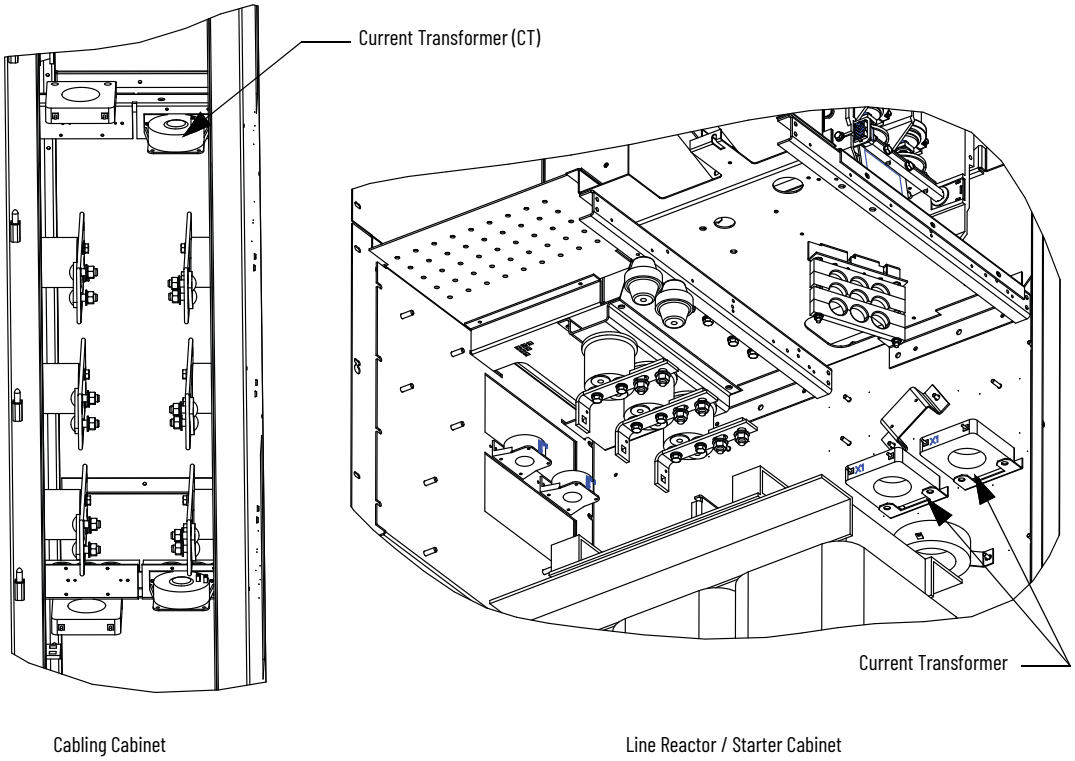

Converter Cabinet Components

Figure 43 - Converter Cabinet Components (2400V Version)

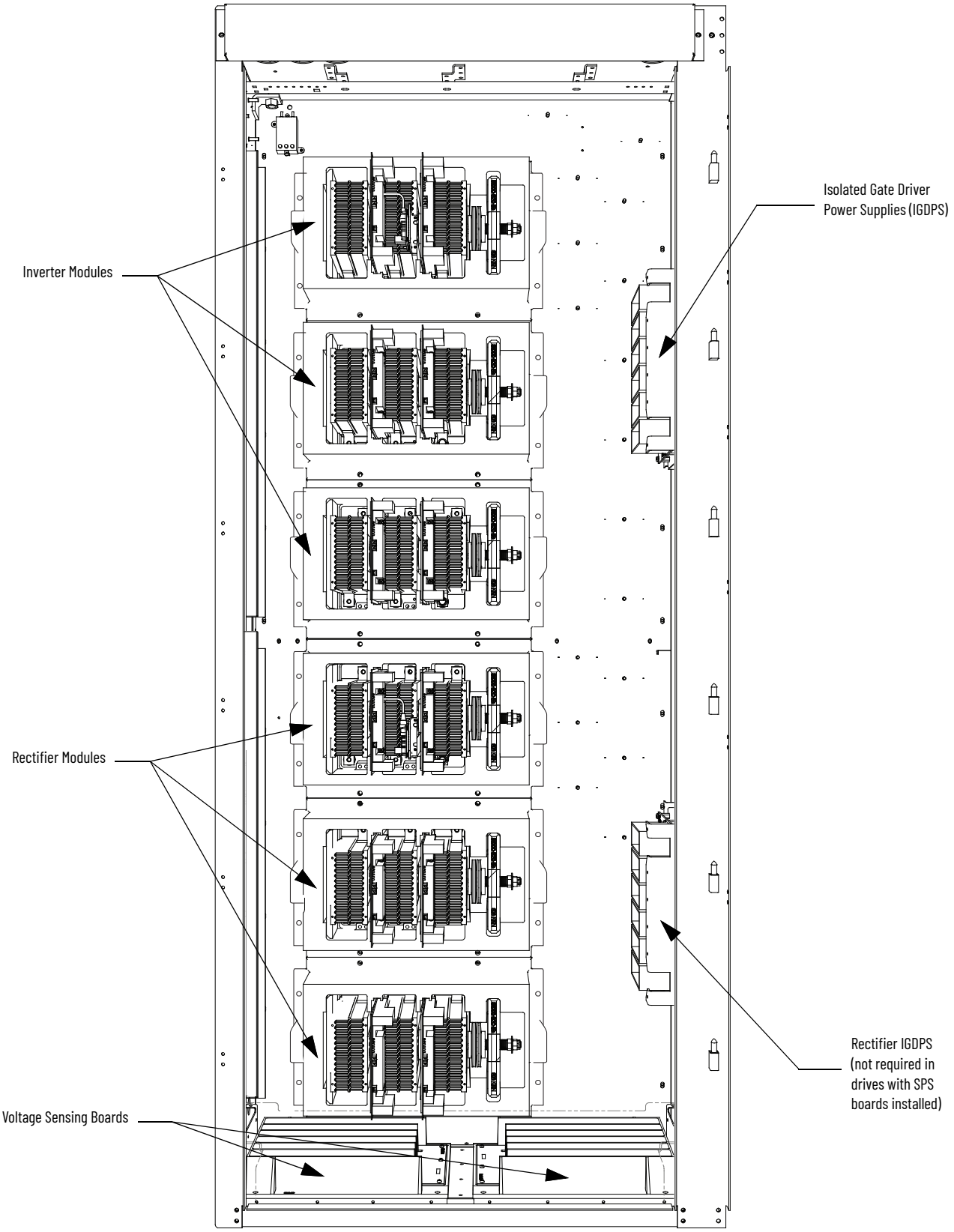

Figure 44 - Converter Cabinet Components (3300/4160V Version)

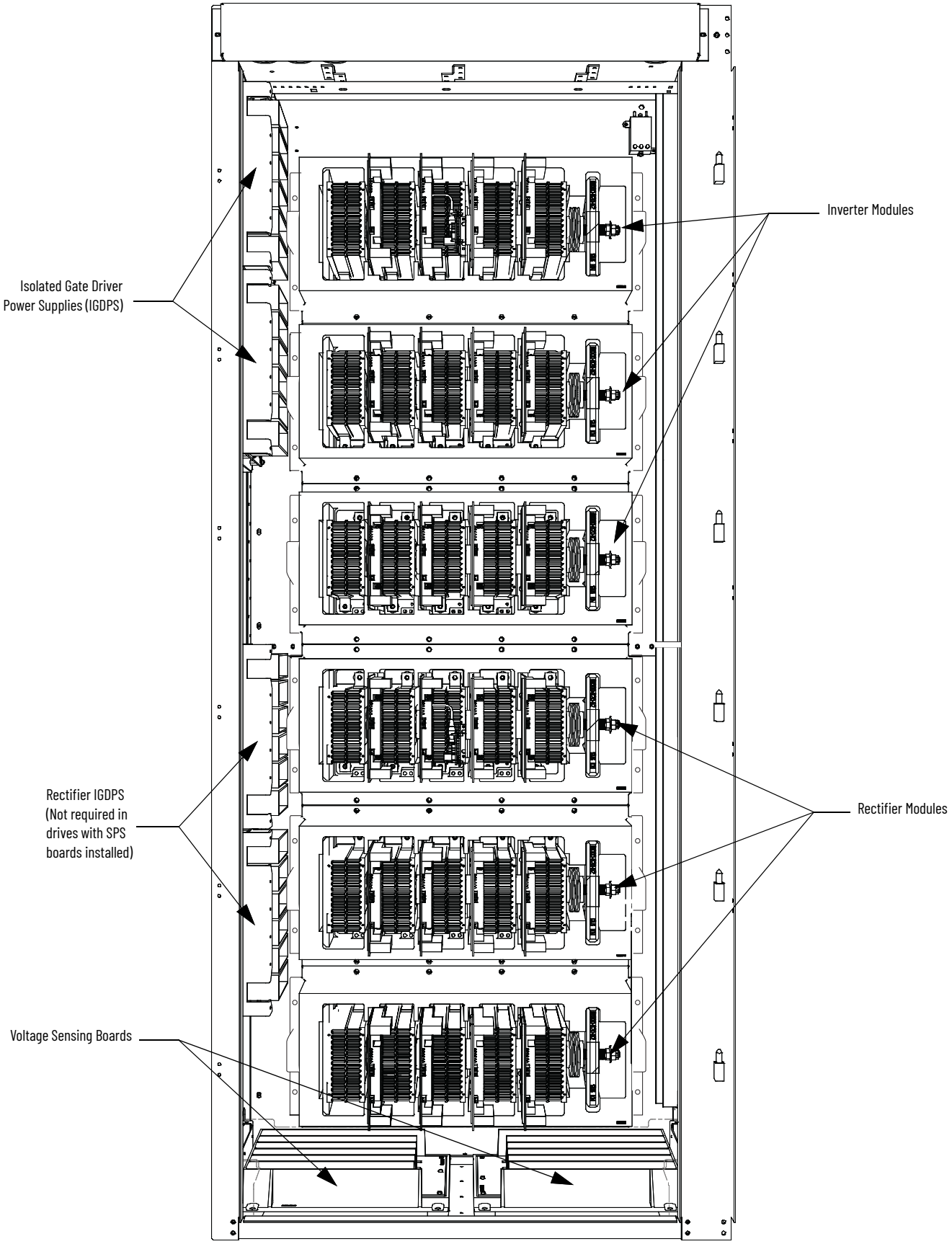

Figure 45 - Converter Cabinet Components (6600V Version)

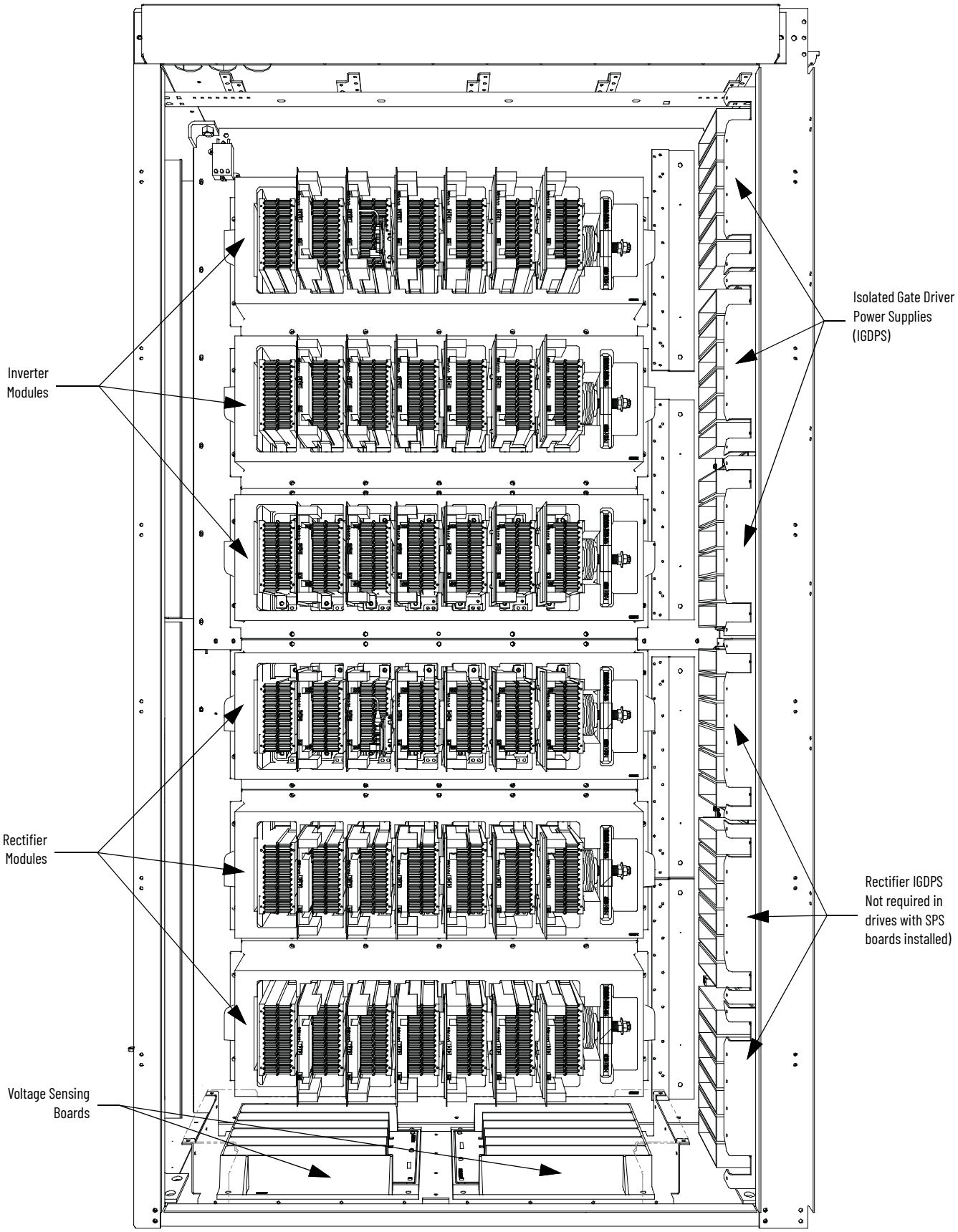

Converter Cabinet

The converter cabinet contains three rectifier modules and three inverter modules. Figure 43 shows a 3300/4160V converter with a PWM Rectifier.

Isolated Gate Driver Power Supplies (IGDPS) are mounted on the right side of the cabinet for 6600V, 2400V Drives. On the left side of the cabinet for 3300V, 4160V Drives.

Thermal sensors are installed on the top module of the inverter and rectifier. The exact location depends on the drive configuration.

Voltage-sensing Assembly

The voltage-sensing assembly consists of two voltage sensing boards, a mounting plate, and a protective cover. Every voltage sensing assembly has six independent channels. These channels convert voltages from up to 10,800V (7.2 kV @ 1.5 pu) to lower voltage levels, which are used by the PowerFlex® 7000 control logic. For drives that require the synchronous transfer option, one extra assembly is used. This extra assembly uses a separate connector to output the transfer voltages directly to the ACB board.

Table 2 is a table of the input voltage ranges for each of the input terminals on the voltage-sensing board. There are four separate inputs taps for each of the six independent channels. This assembly has been designed to operate at a nominal input voltage of up to 7200V with a continuous 40% overvoltage. The output voltages are scaled to provide close to 10V peak for a 140% input voltage at the high end of each of the voltage ranges.

Each of the channels has only four taps. They are used to provide a range of input voltages and software. This range is used to provide a given amount of gain so that 140% corresponds to the maximum numerical value of the analog to digital converter.

Table 2 - Input Voltage Range

Tap	Voltage Range (V)
D	800...1449
C	1450...2499
B	2500...4799
A	4800...7200

ATTENTION: Grounds must be reconnected on the voltage sensing boards. Failure to do so can result in injury, death, or damage to equipment.

Replacing the Voltage-sensing Circuit Board Assembly

1. Verify that there is no power to the equipment.

ATTENTION: To avoid electrical shock, verify that the main power has been disconnected before working on the sensing board. Verify that all circuits are voltage free. Use a hot stick or appropriate high voltage-measuring device. Failure to do so can result in injury or death.

2. Remove clear plastic cover.
3. Mark the position of the ribbon cables and wires.
4. Remove the screws and lift the ring lugs from the terminals. To avoid electrical shock, verify that the main power is disconnected before working on the sensing board to remove the wires.

5. Release the locking mechanism that is on each side of the ribbon cable connector and pull the ribbon cable straight out to avoid bending the pins.
6. Remove the four nuts and washers that secure the assembly to the studs welded to the frame.
7. Remove the old VSB and replace the new VSB on the studs. To secure the assembly, use the existing hardware.

IMPORTANT Do not overtorque the connections or you can break the studs.

8. Replace all ring lugs on terminals. Plug in ribbon cables. Verify that cables are positioned properly and the fitting is secure (the locking mechanism is engaged).
9. For personnel and equipment safety, verify that both grounding connections are reconnected to the sensing board.
10. Replace clear plastic cover and refasten in place.

Figure 46 - Sensing Board with Mounting Hardware Placement

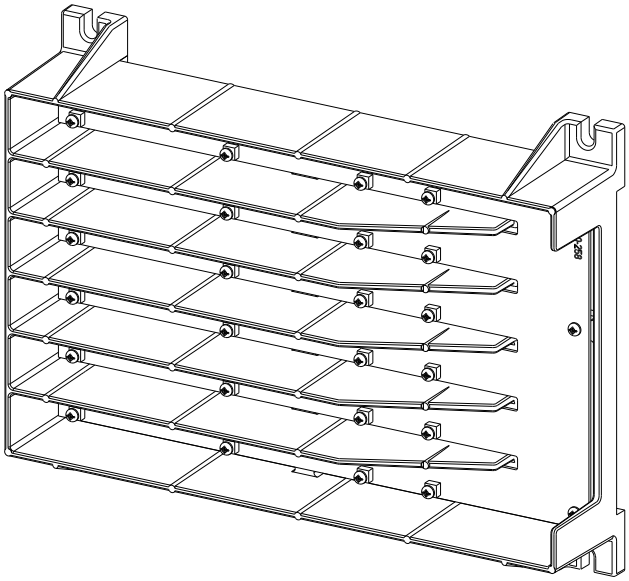

Surge Arresters

Description

Heavy-duty distribution-class surge arresters are used for transient overvoltage protection in the drives with AFE rectifiers. The arresters are certified as per ANSI/IEEE Std C62.11-1993.

The surge arresters are basically MOVs, with or without an air gap in series, packed in sealed housing. They provide overvoltage protection similar to what the TSN module does. They differ from the TSN as fusing is not required for the operation of surge arresters.

There are three types of surge arresters depending on the voltage class of the drive as shown in the following table:

Drive Voltage	2.4 kV	3.3 kV	4.16, 4.8 kV	6.0...6.9kV
Arrester Rating (RMS)	3 kV	6 kV		9 kV
Arrester MCOV (RMS)	2.55	5.10		7.65

The most severe temporary overvoltage occurs when one phase is grounded in an ungrounded system. The full line-to-line voltage is applied to the arrester in this case. The arresters are designed to operate under this condition continuously without any problems as shown by their Maximum Continuous-Operating Voltage (MCOV) rating.

There are three Y-connected surge arresters that are attached to the incoming MV lines. The neutral point of the arresters is connected to the ground bus.

Figure 47 - Surge Arresters

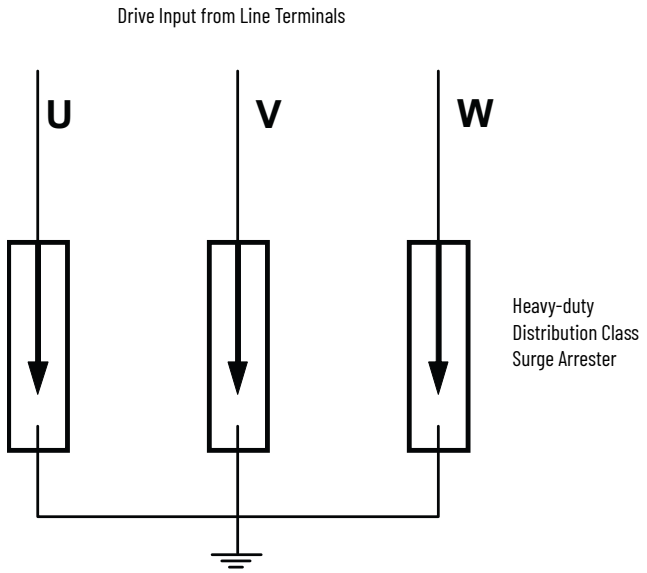

Operation

The operation of arresters without a gap is the same as the MOVs. Depending on design, the arrester can also be gapped. Both gapped and ungapped arresters provide adequate overvoltage protection.

The arresters are able to withstand or ride through most commonly seen bus transients within their capability. Caution must be taken if there is a harmonic filter on the MV bus to which PowerFlex 7000 is connected. The filter must satisfy relevant international or local standards, such as IEEE Std 1531—Clause 6.4, to avoid high inrush currents.

The surge arrester is certified as per ANSI/IEEE Std C62.11-1993. Certification tests include high-current short duration tests, low-current long duration tests, and fault current withstand tests. The fault current withstand tests consist of different combinations of kA and number of cycles. The test includes a 20-kA 10-cycle test, under which the arresters are non-fragmenting and without expelling any internal components.

The housing splits open to vent incoming energy when the handling capability of the arrester is exceeded and causes arrester failure. This design helps avoid damage to the adjacent components.

Surge Arrester Replacement

1. Verify that there is no power to the equipment. Isolate the drive by Lockout/tagout.

ATTENTION: To avoid electrical shock, verify that the main power is disconnected before working on the surge arrester. Verify that all circuits are voltage free. Use a hot stick or appropriate voltage-measuring device. Failure to do so can result in injury or death.

2. Wait for a minimum of 10 minutes to allow the stored energy in the drive to be discharged.
3. Observe the location of the connecting leads.
4. Verify that the leads are at ground potential. Use temporary ground when necessary.
5. Detach the connecting leads.
6. Loosen the bolt that attaches the surge arrester to the ground bus. Remove the arrester. Remove temporary ground when applicable.
7. Replace the surge arrester with an equivalent one (make sure that the voltage rating is the same).
8. Connect the leads to the surge arrester.
9. Surge arrester hardware to be torqued to 28 N•m (21 lb•ft).

Figure 48 - Surge Arresters

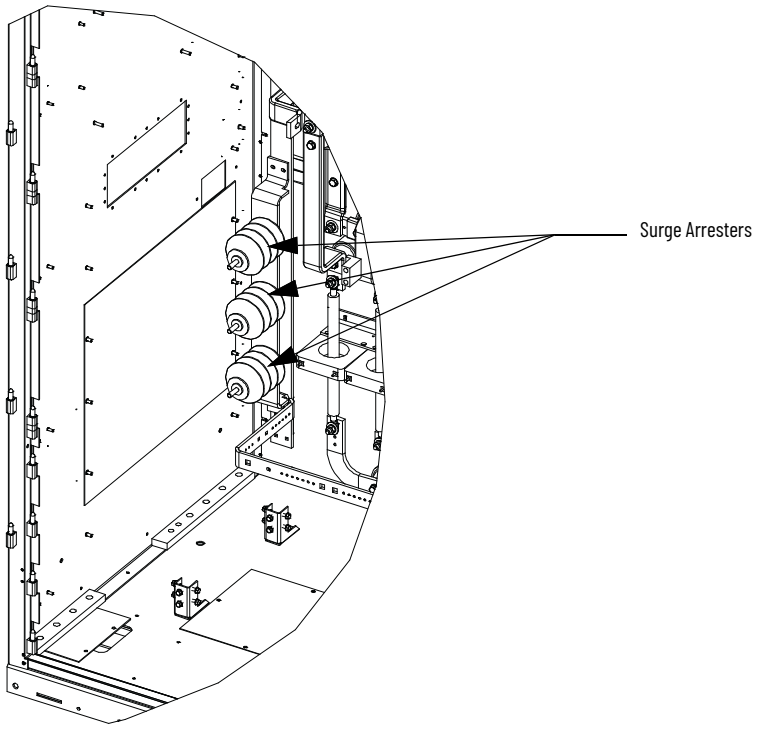

When the surge arrester is disconnected from MV, the arrest can retain a small amount of static charge. As a precautionary measure, install a temporary ground on the line-end of the arrester and discharge the stored energy. Remove temporary ground before the arrester is reinstalled.

ATTENTION: To avoid electrical shock when removing the arrester from service, consider the arrester to be fully energized until both the line and ground leads are disconnected

Field Test and Care

A field test in not necessary. The arresters do not require special care. However at dusty sites, clean the arrester when the whole drive is cleaned.

PowerCage Module Overview

A PowerCage™ module is a converter module with these elements:

- Epoxy resin housing
- Power semiconductors with gate-driver circuit boards
- Heatsinks
- Clamp
- Snubber resistors
- Snubber capacitors
- Sharing resistors (2400V drives do not have a sharing resistor).

Each drive consists of three PowerCage rectifier modules and three PowerCage inverter modules.

AFE type rectifiers use SGCTs as semi-conductors.

All inverter modules use SGCTs as semi-conductors.

The size of the PowerCage module varies depending on the system voltage.

The power semi-conductor usage in the converter section is as follows:

Configuration	Rectifier SGCTs	Inverter SGCTs
2400V, AFE	6	6
3300/4160V, AFE	12	12
6600V, AFE	18	18

Some PowerFlex 7000 configurations contain Self-Powered SGCT Power Supply (SPS) boards. These boards are applicable on all “A” frame drives and all AFE “B” frame drives with heat sinks. See Self-powered SGCT Power Supply - SPS on page 84 for more information.

ATTENTION: To help prevent electrical shock, disconnect the main power before working on the converter cabinet. Verify that all circuits are voltage free using a hot stick or appropriate voltage-measuring device. Failure to do so can result in injury or death

ATTENTION: The PowerCage module houses the SGCT circuit board, which is sensitive to static charges. Do not handle these boards without being properly grounded.

ATTENTION: Static charges can destroy some circuit boards. Use of damaged circuit boards can also damage related components. A grounding wriststrap is recommended for handling sensitive circuit boards.

The inverter module is the module that contains the SGCT power device necessary for producing the motor voltages and currents. There are three inverter modules in each drive; the number of SGCTs per module depends on the voltage rating of the motor. To understand a module, a description of one SGCT and its peripheral equipment is all that is required.

Resistance Checks

Before control power is applied to the drive, measurements must be taken of the power semiconductor and of snubber circuit resistance. These measures verify that the converter section was not damaged during shipment. The instructions that are provided below detail how to test these components:

- Inverter or AFE rectifier bridge:
  - Snubber resistance test (snubber resistor).
  - Snubber capacitance test (snubber capacitor).
  - Anode-to-cathode resistance test (the sharing resistor and SGCT).

ATTENTION: Before attempting any work, verify that the system has been locked out and tested to have no potential.

Snubber Resistors

Snubber resistors connect in series with the snubber capacitors. Together they form a simple RC snubber that connects across each thyristor (SGCT). The snubber circuit reduces the dv/dt stress on the thyristors and reduces the switching losses. The snubber resistors connect as sets of various wire-wound resistors that are connected in parallel. The number of resistors in parallel depends on the type of the thyristor and the configuration and frame size of the drive.

Snubber Capacitors

Snubber capacitors are connected in series with the snubber resistors. Together they form a simple RC snubber that is connected across each thyristor (SGCT). The purpose of the snubber circuit is to reduce the voltage stress (dv/dt and peak) of the thyristor and to reduce the switching loss.

Sharing Resistors

The sharing resistors provide equal voltage sharing when using matched devices in series. SGCT PowerCage modules for 2400V systems do not need matched devices and have no sharing resistor.

SGCT and Snubber Circuit

As with all power semi-conductors or thyristors, the SGCT must have a snubber circuit. The snubber circuit for the SGCT is composed of a snubber resistor in series with a snubber capacitor.

The snubber circuit is shown in Figure 49. The physical locators of the same circuit are shown in Figure 57. Measure the resistance across two adjacent heatsinks. A value of 60...75 kΩ indicates a good sharing resistor.

Figure 49 - Snubber Circuit for SGCT Module

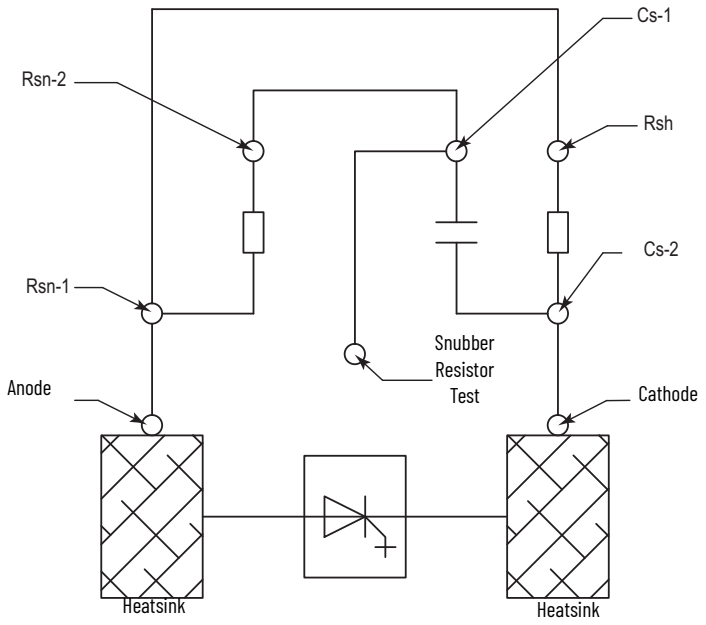

Figure 50 - Snubber Circuit for SGCT Module (with SPS Board)

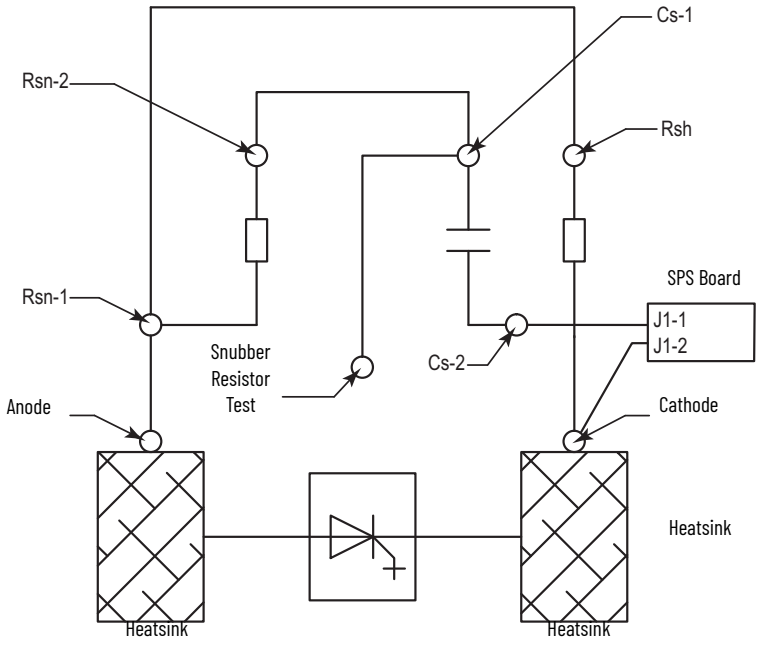

Figure 51 - 2400V Two Device PowerCage (Heat Sink Model)

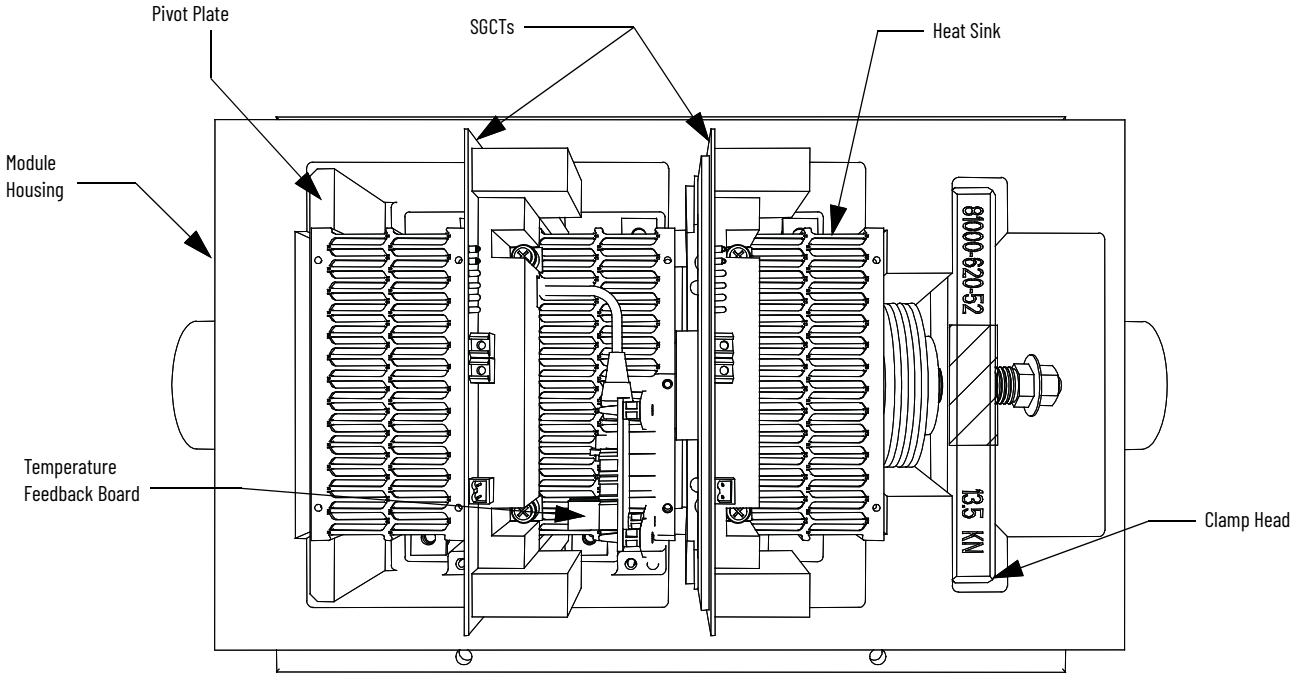

Figure 52 - 2400V Two Device PowerCage Module (with SPS Boards Installed)

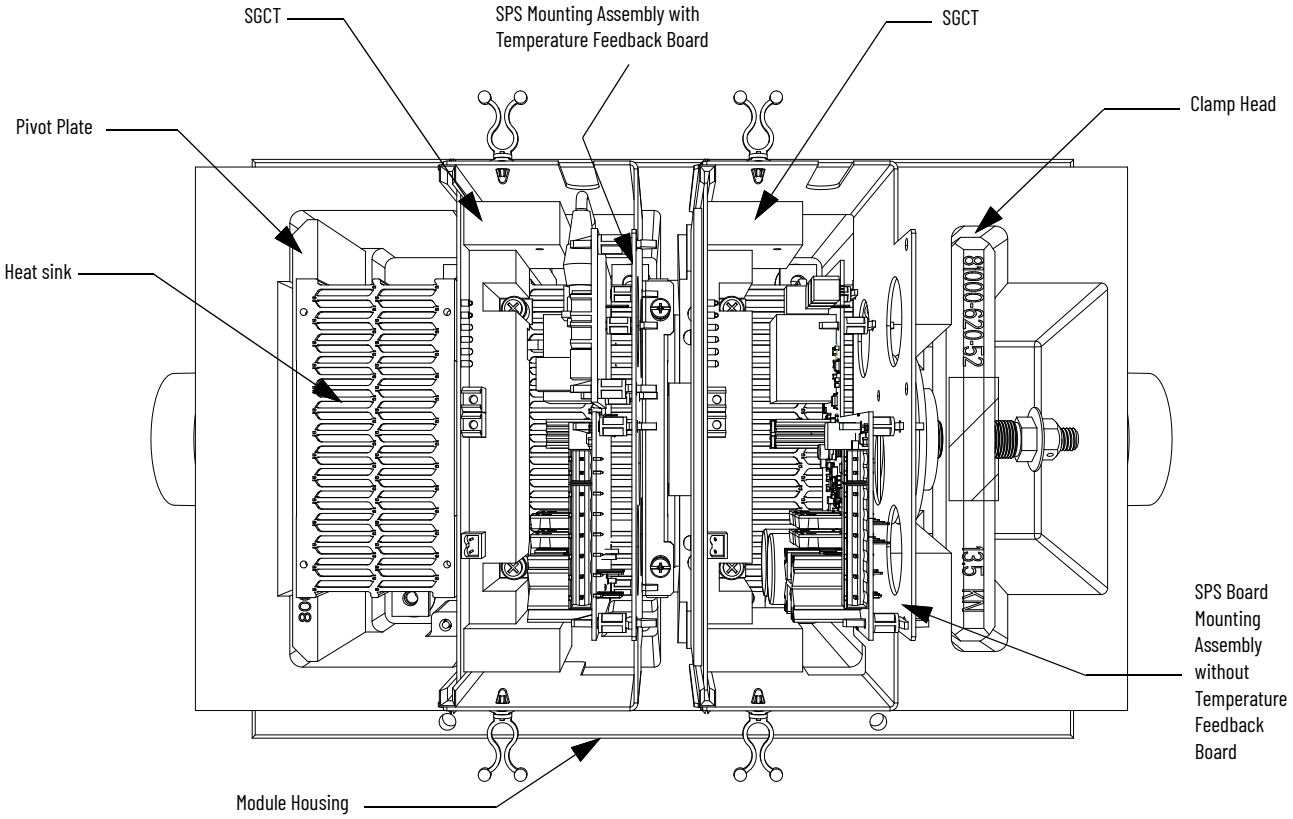

Figure 53 - 3300/4160V Four Device PowerCage (Heat Sink Model)

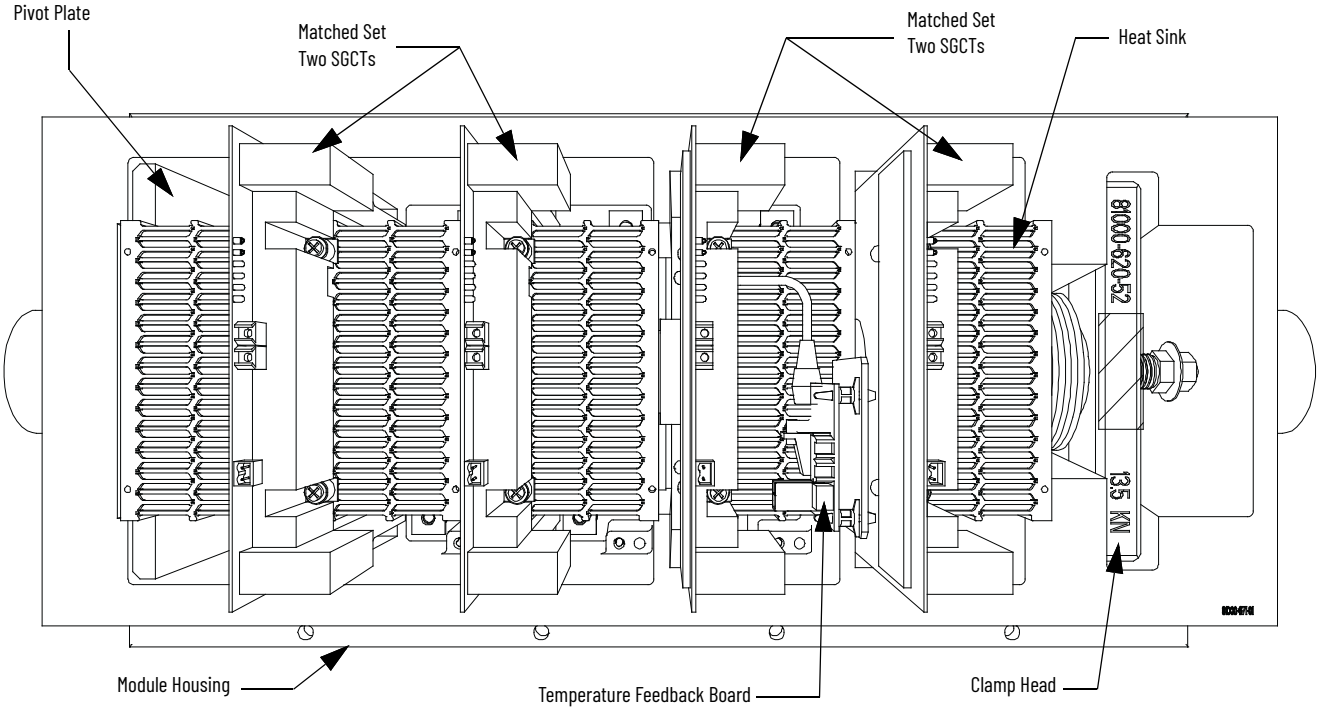

Figure 54 - 3300/4160V Four Device Rectifier PowerCage Module (with SPS Boards Installed)

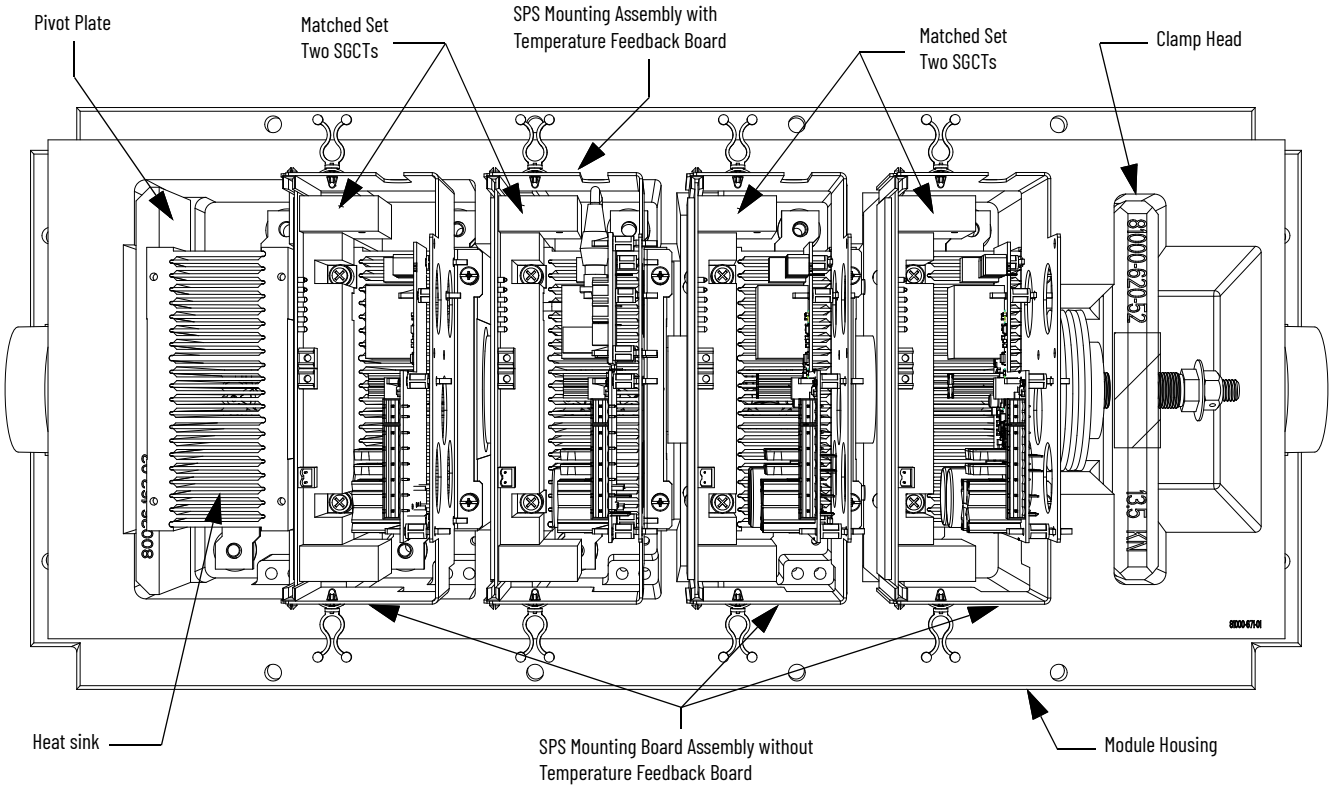

Figure 55 - 6600V Six Device PowerCage Module

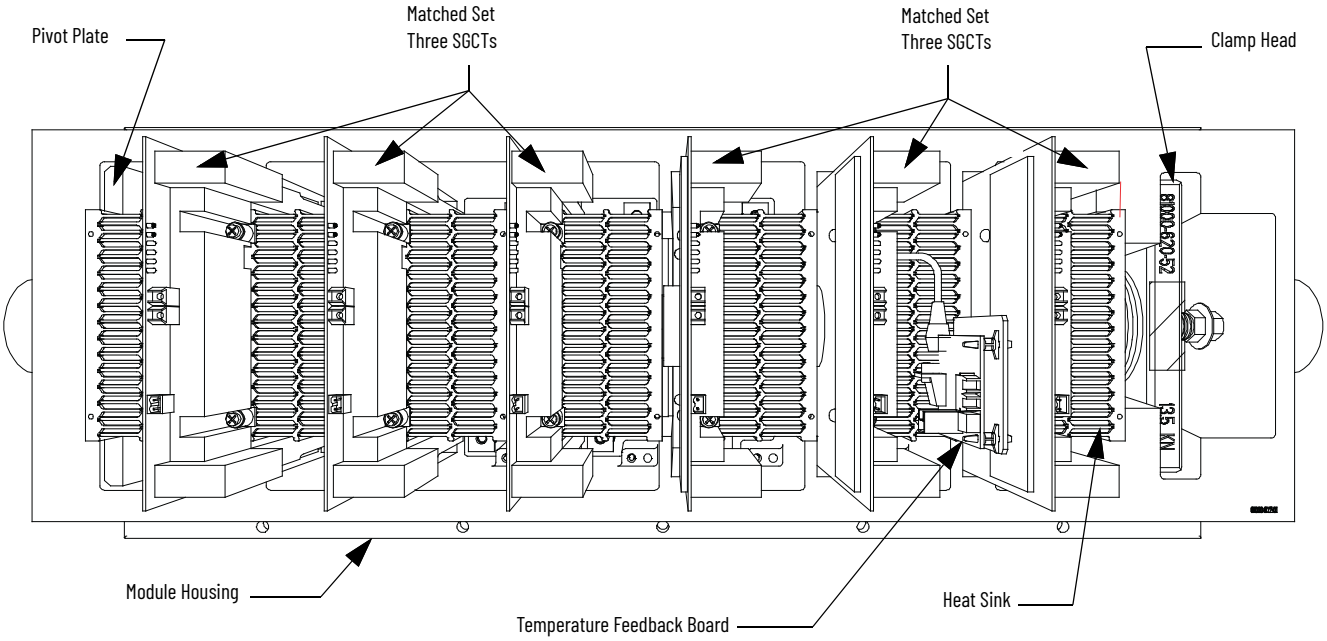

Figure 56 - 6600V Six Device PowerCage Module (with SPS Boards Installed)

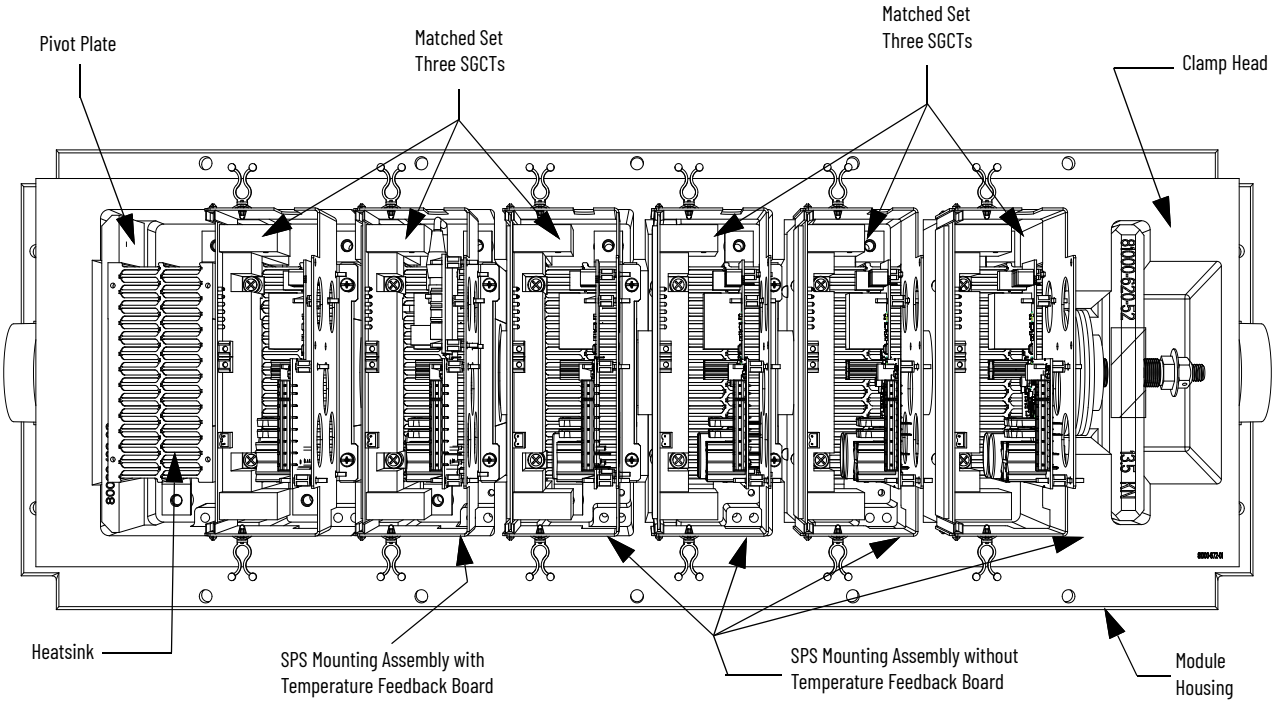

Figure 57 - Snubber Circuit Assembly for SGCT Module

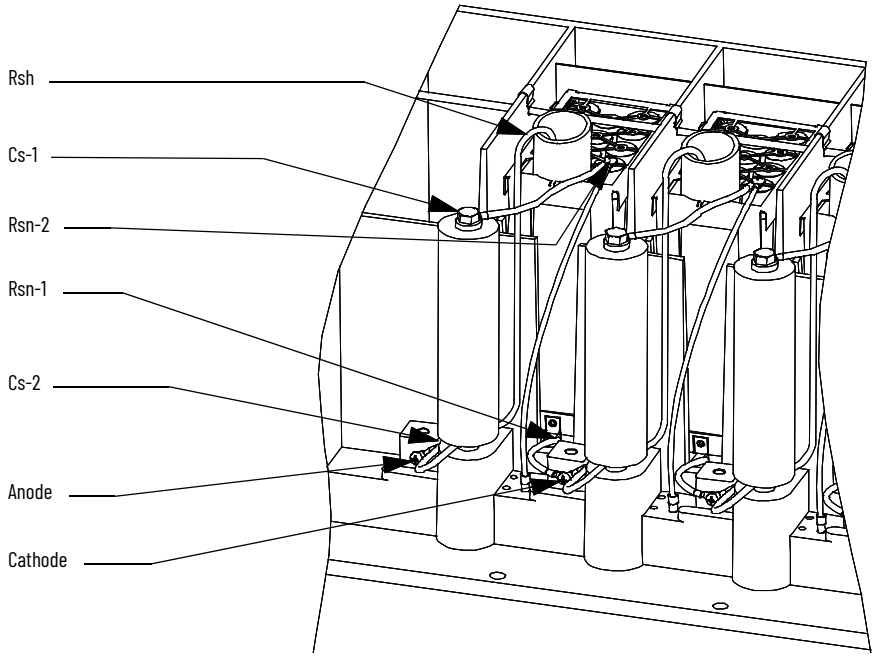

A sharing resistor is connected in parallel with the SGCT. The sharing resistor verifies that the voltage is shared equally among the SGCTs when connected in series. SGCTs are connected in series to increase the total reverse voltage blocking (PIV) capacity as seen by the electrical circuit. One SGCT has a PIV rating of 6500V. This single device provides sufficient design margin for electrical systems with 2400V medium voltage supply. At 4160V, two SGCTs must be connected in series to provide a net PIV of 13,000V to achieve the necessary design margin. Similarly, three SGCTs must be connected in series at 6600V, providing a net PIV of 19,500V to achieve the necessary design margin.

The SGCT is cooled by placing the SGCT between two forced air-cooled heatsinks, one heatsink on the anode and the other heatsink on the cathode. The clamp assembly on the right-hand side of the inverter module generates these forces.

SGCT	Device Diameter	Clamp Force
400 A SGCT	38 mm (1.49 in.)	8.6 kN
800 A SGCT	47 mm (1.85 in.)	13.5 kN
1500 A SGCT	63 mm (2.48 in.)	20 kN

Pressure on the SGCTs must be uniform to avoid damage and to help maintain low thermal resistance. To achieve uniform pressure:

1. Loosen the heatsink mounting-bolts.
2. Tighten the clamp.
3. Tighten the heatsink mounting-bolts.

External filtered air is directed through the slots of the heatsinks to carry away the generated heat from the SGCTs. The door filter is necessary to keep the slots on the heatsinks from getting plugged with dust particles.

SGCT Anode-to-Cathode Sharing Resistance

The anode-cathode resistance check measures the parallel combination of the sharing resistor and SGCT anode-cathode resistance. The sharing resistor has a resistance much lower than a good SGCT, thus the measurement is slightly less than the resistance of the sharing resistor. A measurement between 60...75 kΩ indicates that the SGCT is in good condition and that wiring to the SGCT is correct. If the SGCT fails, the SGCT is in the shorted mode, 0 Ω. The anode to cathode resistance check is 0 Ω.

A test point is provided inside the PowerCage module to measure the resistance of the snubber resistor and capacitance of the snubber capacitor. The test point is the electrical connection between the snubber resistor and snubber capacitor. The procedure is to place one probe of the multi-meter on the test point, and the other probe on the anode heatsink to measure the snubber resistor value and the snubber capacitor (Figure 58). Remove the snubber terminal connection to TB1 of the SPGD board. Measure between the test point and the wire that is connected to pin 1 of the TB1 female connector. Replace the snubber terminal connection once the measurement is complete.

Figure 58 - Resistance Measurements SGCT PowerCage Module

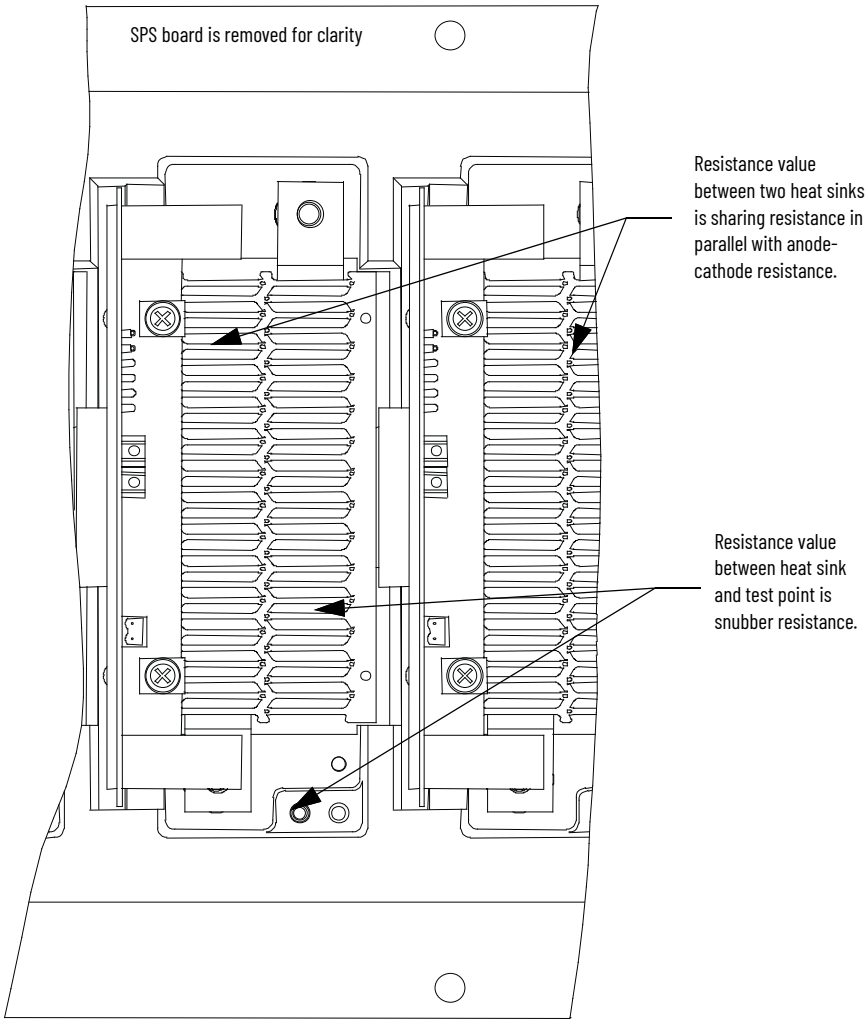

Snubber Resistance

Access to the snubber resistor is not required to test its resistance. Located within the PowerCage module under the heatsink is a snubber circuit test-point. For each device, there is one test point. To verify the resistance, measure the resistance between the test point and the heat sink.

Figure 59 - Testing the Snubber Resistor

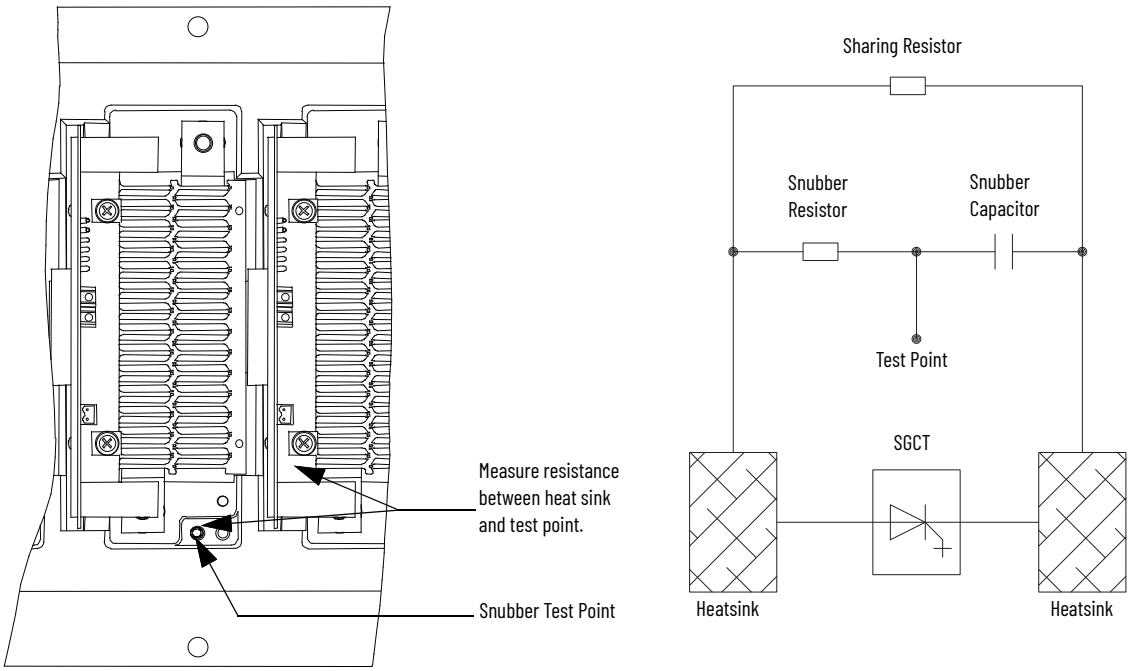

Figure 60 - Snubber Resistor Test (with SPS Board)

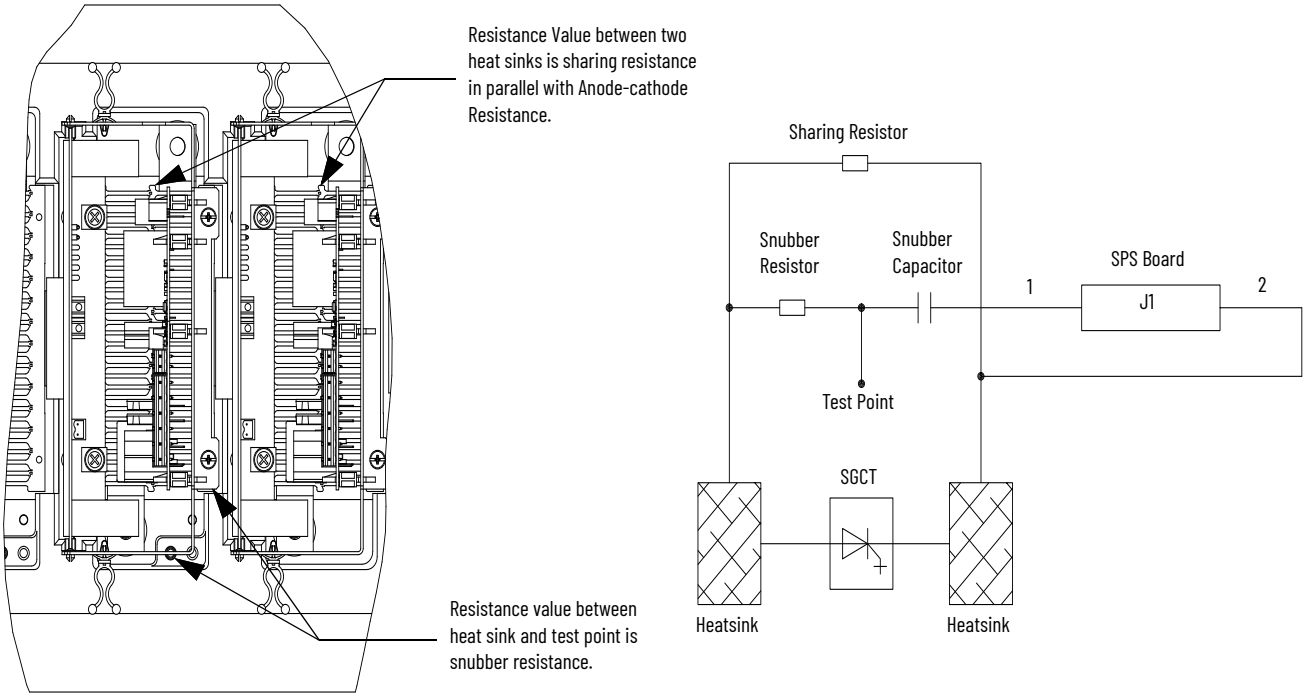

Snubber Capacitance

Turn the multimeter from the resistance to capacitance measurement mode. Verify the snubber capacitor by measuring from the test point to the heat sink next to the right for standard rectifiers, or from heat sink to heat sink. For SPS rectifiers:

1. Disconnect the J1 connector from the SPS board.
2. Measure from the test point to pin 1 of the Phoenix connector (that plugs into J1 of the SPS board).

Figure 61 - Snubber Capacitor Test

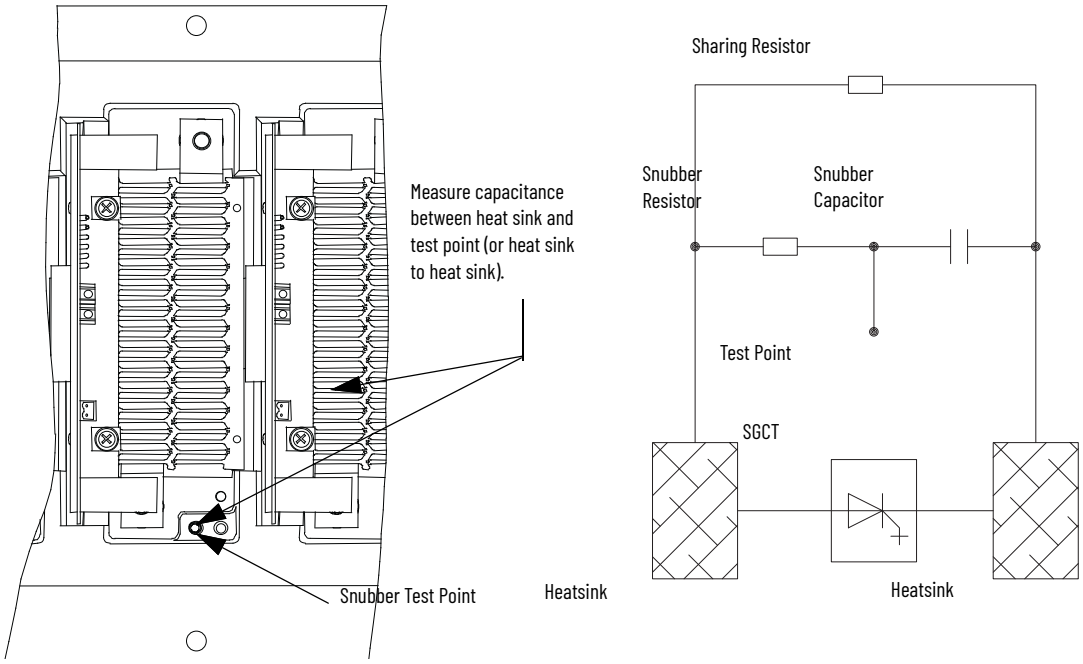

Figure 62 - Snubber Capacitor Test (Shown with SPS Board Installed)

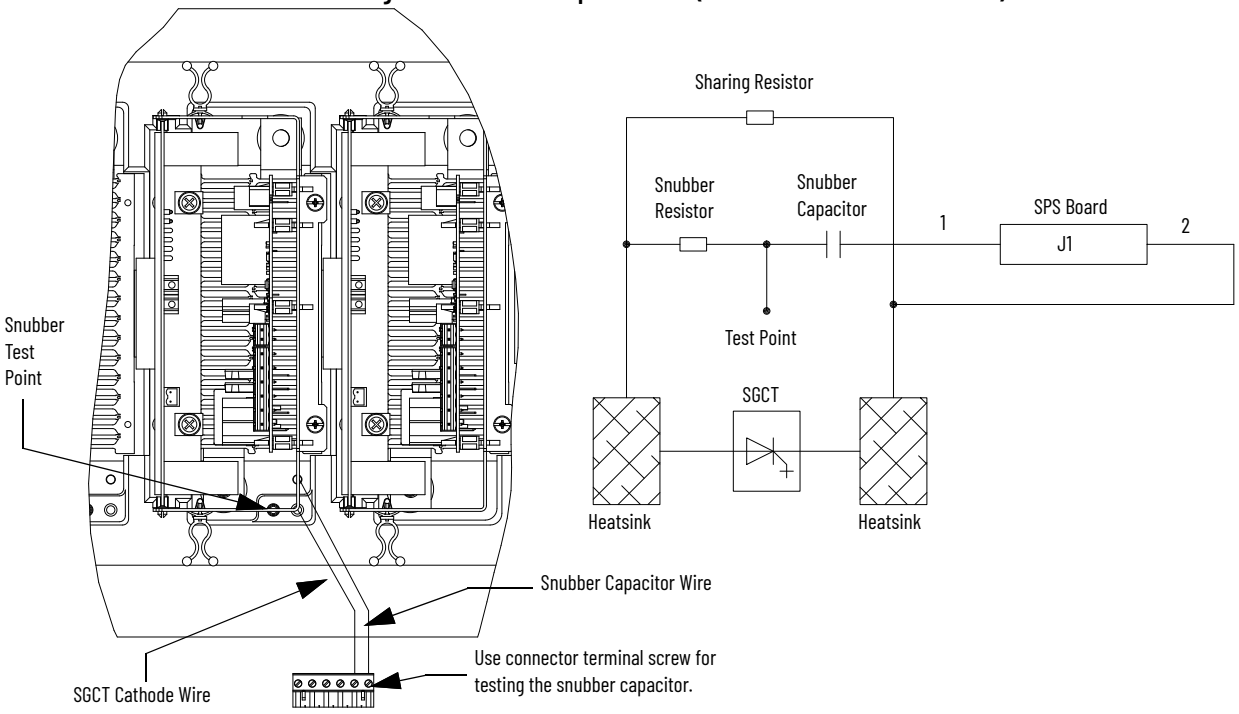

Replacing the SGCT

The Symmetrical Gate Commutated Thyristor (SGCT or device) with attached circuit board is located within the PowerCage module assembly.

SGCTs must be replaced in matched sets:

- 3300V and 4160V systems use sets of two.
- 6600V systems use sets of three.

The SGCT and associated control board are one component. The device or the circuit board is never changed individually. There are four status indicators on the SGCT; this table describes their functions:

Status Indicator 4	Green	Solid Green indicates that the Power Supply to the Card is OK.
Status Indicator 3	Green	Solid Green indicates that the Gate-Cathode resistance is OK.
Status Indicator 2	Yellow	Status indicator ON indicates that the gate is ON, and flashes alternately with status indicator 1 while gating.
Status Indicator 1	Red	Status indicator ON indicates that the gate is OFF, and flashes alternately with status indicator 2 while gating.

1. Verify that there is no power to the equipment.

ATTENTION: To avoid electrical shock, verify that the main power has been disconnected before working on the drive. Verify that all circuits are voltage free. Use a hot stick or appropriate voltage-measuring device. Failure to do so can result in injury or death

   Note the position of the fiber-optic cables for assembly.

2. To remove the SGCT, remove the power cable for the gate driver and the fiber-optic cables. If the minimum bend radius (50 mm [2 in.]) of the fiber-optic cables is exceeded, it can result in damage.

   If installed, remove the SPS snubber connector (J1 on the SPS board) and remove the SPS mounting-bracket with the SPS board.

ATTENTION: The fiber-optic cables can be damaged when struck or bent sharply. The minimum bend radius is 50 mm (2 in.). The connector has a locking feature that requires pinching the tab and gently pulling the connector out straight. The component on the printed circuit board must be held to avoid damage.

3. Remove the load on the clamp head assembly as described on page 77.
4. Two brackets secure the board to the heatsink. Loosen the captive screws until the circuit board is free. Adjust the position of the heatsinks, as required, to allow free movement of the SGCT.

5. Slide the circuit board straight out.

ATTENTION: Static charges can destroy or damage the SGCT. Personnel must be properly grounded before removing the replacement SGCT from the protective anti-static bag in which the SGCT is supplied in. Use of damaged circuit boards can also damage related components. A grounding wriststrap is recommended for handling sensitive circuit boards.

IMPORTANT Replacement SGCTs are supplied, grouped in matched sets. All SGCTs in a leg have been grouped based on their electrical performance. Grouping similarly matched devices helps ensure balanced load sharing of a leg of devices. When replacing the device, replace all SGCTs in a matched set, even if only one has failed.

6. Clean the heatsink with a soft cloth and rubbing-alcohol.
7. While grounded, remove the SGCT from the anti-static bag in which the SGCT is supplied in.
8. Apply a thin layer of Electrical Joint Compound (EJC No. 2 or approved equivalent) to the contact faces of the new SGCTs to be installed. The recommended procedure is to apply the compound to the pole faces with a small brush. Then gently wipe the pole face with an industrial wipe so that a thin film remains. Examine the pole face before proceeding to verify that no brush bristles remain.

IMPORTANT Too much joint compound can result in contamination of other surfaces and lead to system damage.

9. Slide the SGCT into place until the mounting brackets contact the surface of the heatsink.
10. Tighten the captive screws that are in the brackets.
11. Follow procedure Maintain Uniform Clamping Pressure on page 76 to verify that the heatsinks are clamped to a uniform pressure.

    If equipped, reinstall the SPS board and mounting-bracket, and reconnect the snubber connection to J1 of the SPS board.
12. Connect the power cable and fiber-optic cables (verify that the bend radius is not exceeded).

Figure 63 - Replacing the SGCT

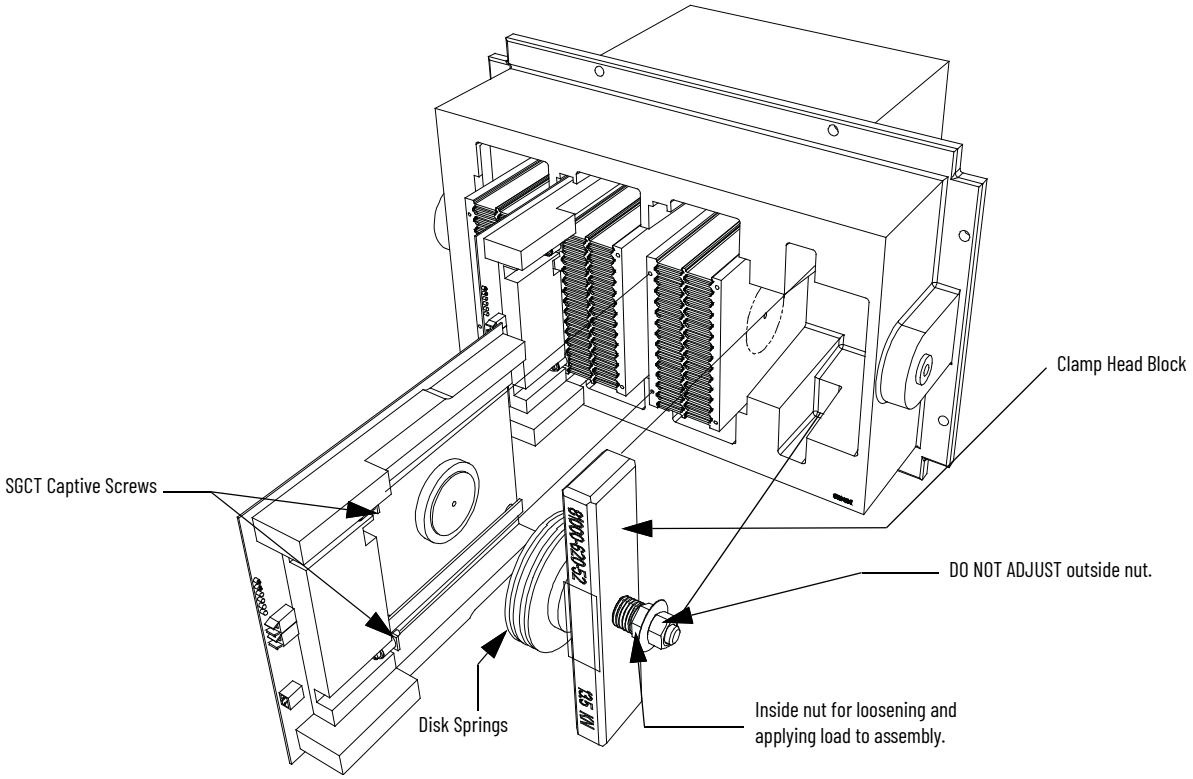

Figure 64 - Replacing the SGCT (If SPS Board Is Installed)

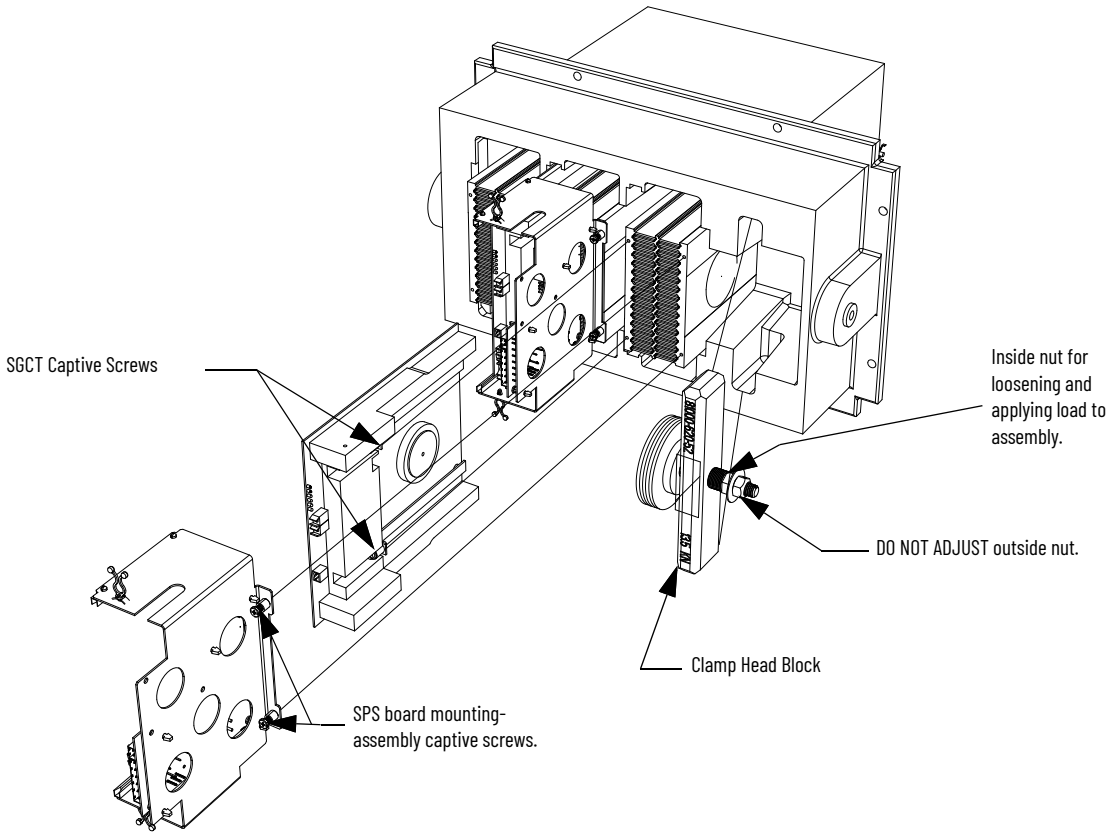

Replacing Snubber and Sharing Resistor

The snubber and the sharing resistors are part of the resistor assembly that is located behind the PowerCage module.

1. Remove the PowerCage module as outlined in PowerCage Module Removal on page 82.

Figure 65 - Removal of the PowerCage Module

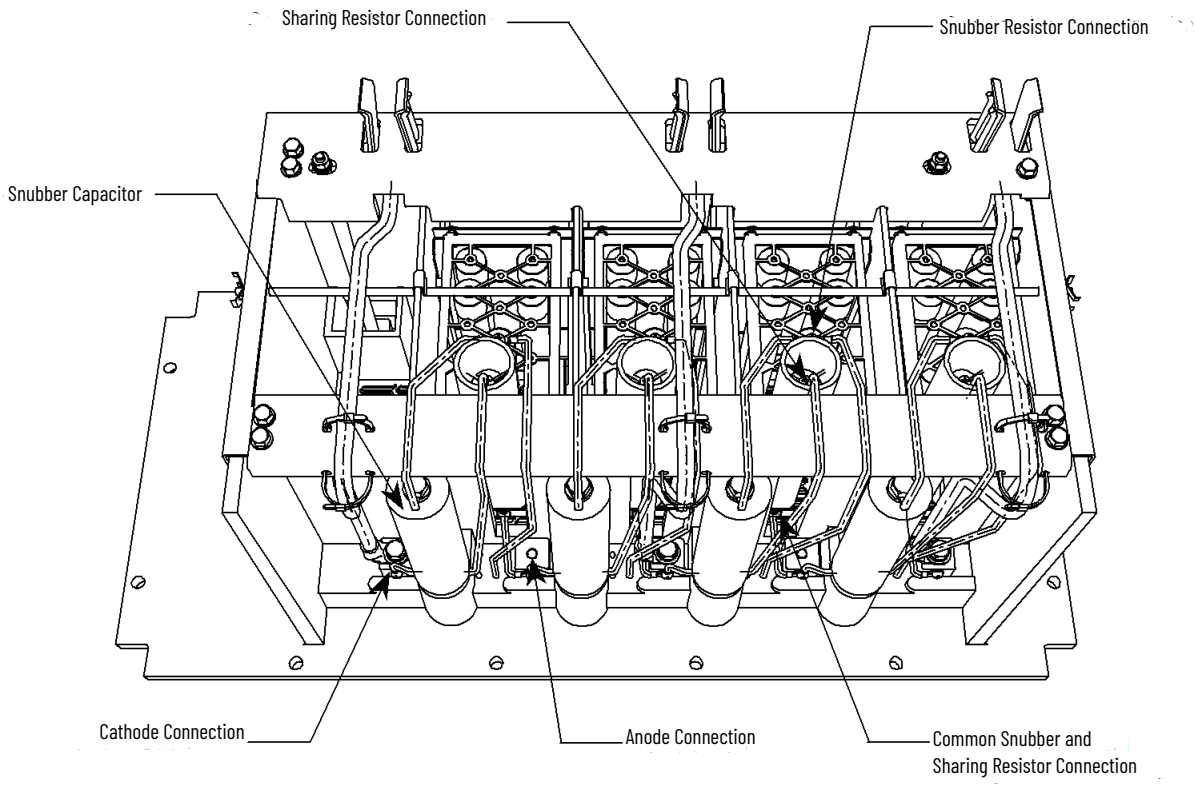

2. Note the connection of the leads for correct replacement.
3. Detach the leads that are on the bottom of the resistor assembly. See Figure 66.
4. Remove the push nuts on the end of the retaining rod. Pinch the clip together and pull off. Pull out the retaining rod. See Figure 66.
5. Remove two bolts and swing out the PowerCage plug-in stab assembly.

Figure 66 - Snubber and Sharing Resistor, Snubber Capacitor Replacement

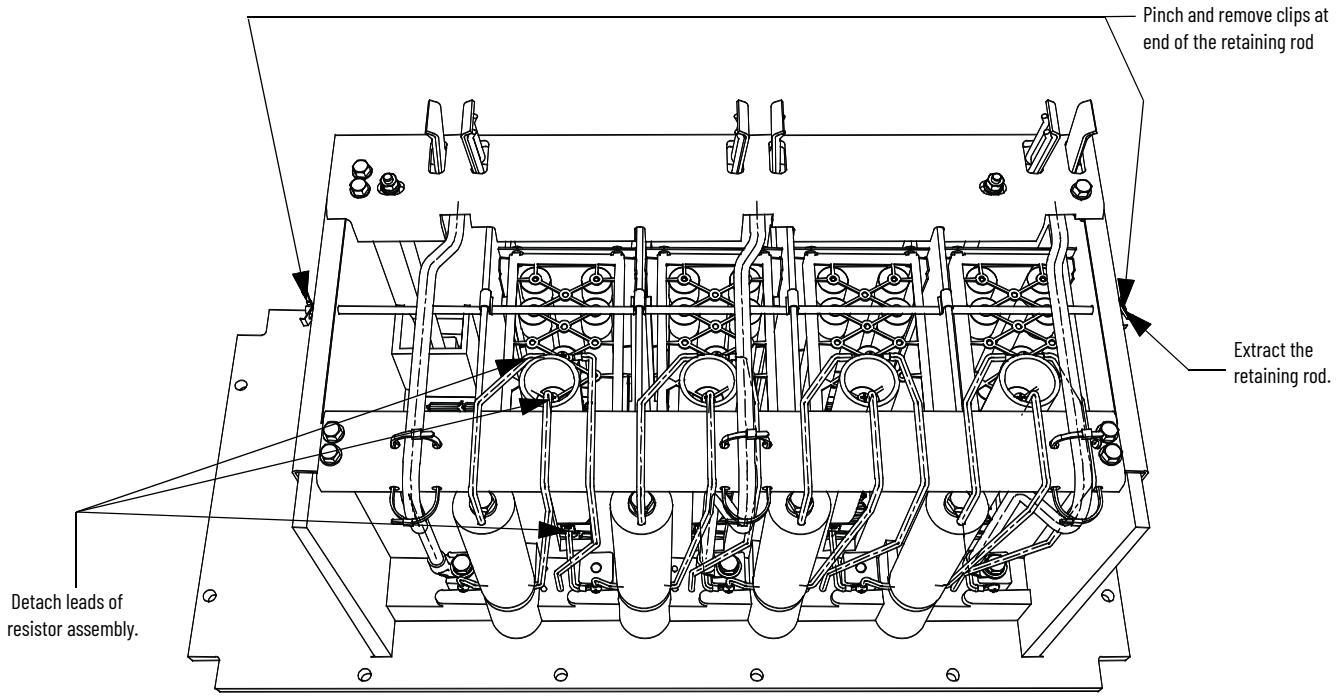

Figure 67 - Removing the Resistor Bank from the PowerCage Module

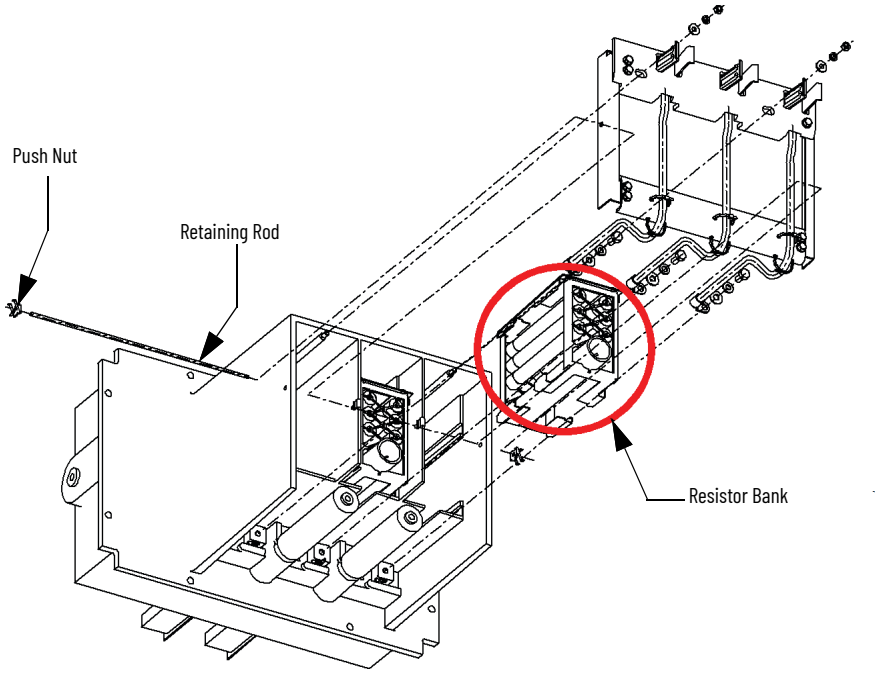

6. Remove the resistor bank from the PowerCage module. See Figure 67.
7. Place the new resistor bank assembly back into the PowerCage module.
8. Slide the retaining rod into place and push the clips back into place.
9. Connect the leads to the resistor bank.
10. Install the PowerCage module as outlined in PowerCage Module Removal on page 82.

Snubber Capacitor Replacement

The snubber capacitors are part of the capacitor assembly located behind the PowerCage module.

IMPORTANT If the drive can be accessed from the rear, the snubber capacitors can be removed and replaced from the rear, with the PowerCage modules in place.

If the drive cannot be accessed from the rear, the PowerCage modules must be removed to access the snubber capacitors. See PowerCage Module Removal on page 82.

Replace the capacitors one at a time. Do not remove all at once.

1. Using a 13 mm socket wrench, remove the M8 bolt on the end of the capacitor and retain hardware.
2. Hand rotate the capacitor counter-clockwise to unscrew it from the threaded stud connecting it to the PowerCage module.
3. Apply a drop of Loctite 425 to the thread of the 25 mm flange side of the replacement capacitor.
4. Hand-tighten the replacement capacitor onto the threaded stud.

ATTENTION: You must insert the capacitor in the correct orientation. The 25 mm flange must be connected to the threaded stud on the PowerCage module.

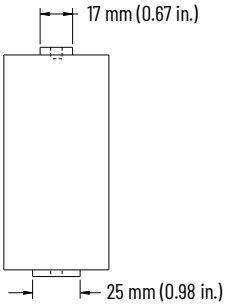

5. Connect the electrical leads and hardware on the 17 mm flange side of the replacement capacitor.

   Torque M8 hardware to 7 N•m (60 lb•in).

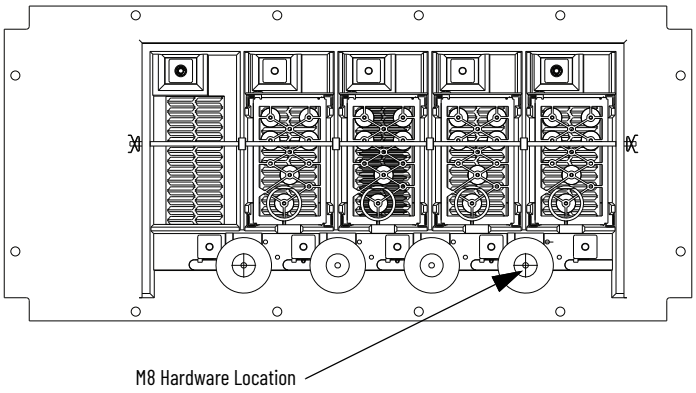

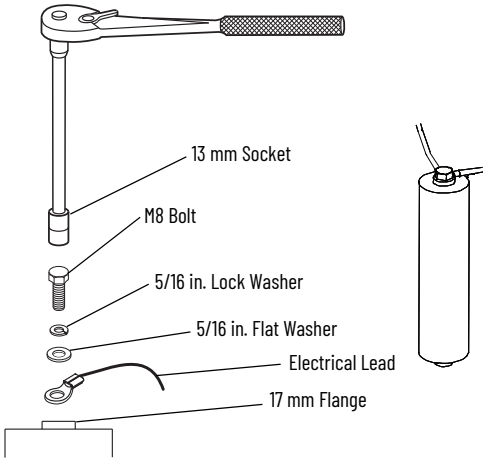

6. Bundle and secure the connecting wires using wire ties.

Sharing Resistor Replacement

Normally the sharing resistor is part of the snubber resistor assembly. When the sharing resistor is replaced, also replace the snubber resistor.

The sharing and snubber resistors are normally on the backside of the PowerCage module. See Replacing Snubber and Sharing Resistor.

Maintain Uniform Clamping Pressure

Always maintain proper pressure on the thyristors. Follow this procedure whenever a device is changed or the clamp is loosened completely.

1. Apply a thin layer of electrical joint compound (EJC No. 2 or approved equivalent) to the pressure pad face(Figure 69). To apply the compound, use a small brush and gently wipe the pad face with an industrial wipe until a thin film remains. Verify that no brush bristles remain.
2. Torque the heat sink bolts to 13.5 N•m (10 lb•ft.), then loosen each bolt two complete turns.

Figure 68 - Location of Heat Sink Bolts

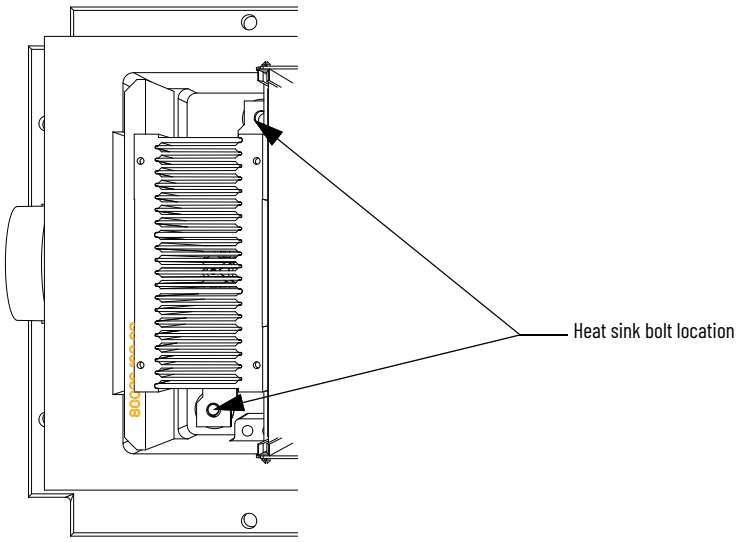

3. Tighten the clamp to the proper force until you can turn the indicating washers by the fingers with some resistance.
4. Torque the heat sink bolts to 13.5 N•m (10 lb•ft.). Start with the center heat sink and move outward, alternate left to right.
5. Check the indicating washer of the clamp.

Checking the Clamping Pressure

Periodically, the clamping force in the PowerCage module must be inspected. Verify that there is no power to the equipment.

ATTENTION: Main power must be disconnected before working on the drive. Verify that all circuits are voltage free. Use a hot stick or appropriate voltage-measuring device. Failure to do so can result in injury or death.

Figure 69 - Clamp Head Illustration

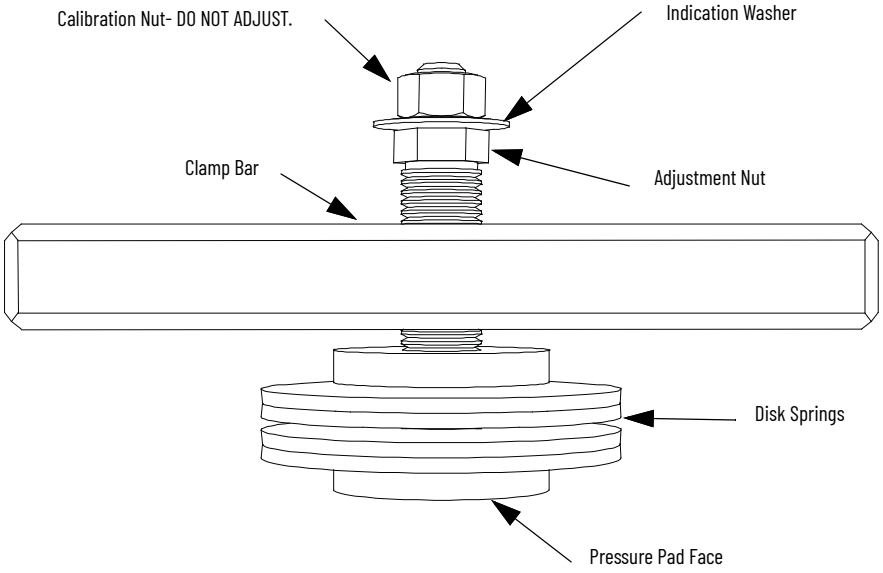

If proper force (as designated on the clamp head block) is applied to the clamping assembly, the indicating washer is able to rotate with fingertip touch. The indicating washer must not rotate freely. Turn the indicating washer using fingers until there is some resistance.

Adjusting the Clamping Pressure

1. Verify that all power to the drive is off.
2. Do not loosen the adjustment nut. If the clamping pressure is let off, the assembly procedure must be conducted to verify uniform pressure on the thyristors.
3. Tighten with a 21 mm (13/16 inch) wrench on the adjustment nut (upward motion) until fingers can turn the indicating washer with some resistance. The indicating washer MUSTNOT ROTATE FREELY.

IMPORTANT Never rotate the calibration nut that is located outside the indicating washer at the end of the threaded rod. The rotation of the outer nut affects the torque calibration, which is factory set. Only adjust the inside nut (see Figure 69).

Temperature Sensing

Thermal sensors are on heatsinks in the converter. The thermal sensor is mounted on the heatsink with the temperature feedback board.

Replacing the Thermal Sensor

1. Verify that there is no power to the equipment.

ATTENTION: to avoid electrical shock, verify that the main power has been disconnected before working on the drive. Verify that all circuits are voltage free. Use a hot stick or appropriate voltage-measuring device. Failure to do so can result in injury or death.

2. Remove the SPS bracket first, if installed. The heatsink with the thermal sensor must be removed from the PowerCage module. Remove clamp load, refer to Figure 69.
3. Remove the device (SGCT) that is secured to the heatsink with the thermal sensor.
4. Disconnect the fiber-optic cable to the temperature feedback board.
5. Remove two M8 screws that hold the heatsink in place.
6. Remove the heatsink with the temperature feedback board from the PowerCage module. If SPS is equipped, the heatsink is on the SPS mounting bracket.
7. Disconnect the plug that connects the thermal sensor to the circuit board.
8. Remove the screw that attaches the thermal sensor to the heatsink.
9. Replace with the new thermal sensor and cable assembly.
10. There is a small voltage difference between the thermal sensor and its heatsink. For proper function, mount the small insulating pad between the thermal sensor and the heatsink, and the insulating bushing between the mounting screw and the thermal sensor (see Figure 70).
11. Replacement of the heatsink with the new thermal sensor is in the reverse order of removal.
12. Follow procedure Maintain Uniform Clamping Pressure on page 76 to verify that the heatsinks are clamped to a uniform pressure.

Figure 70 - Replacing the Thermal Sensor

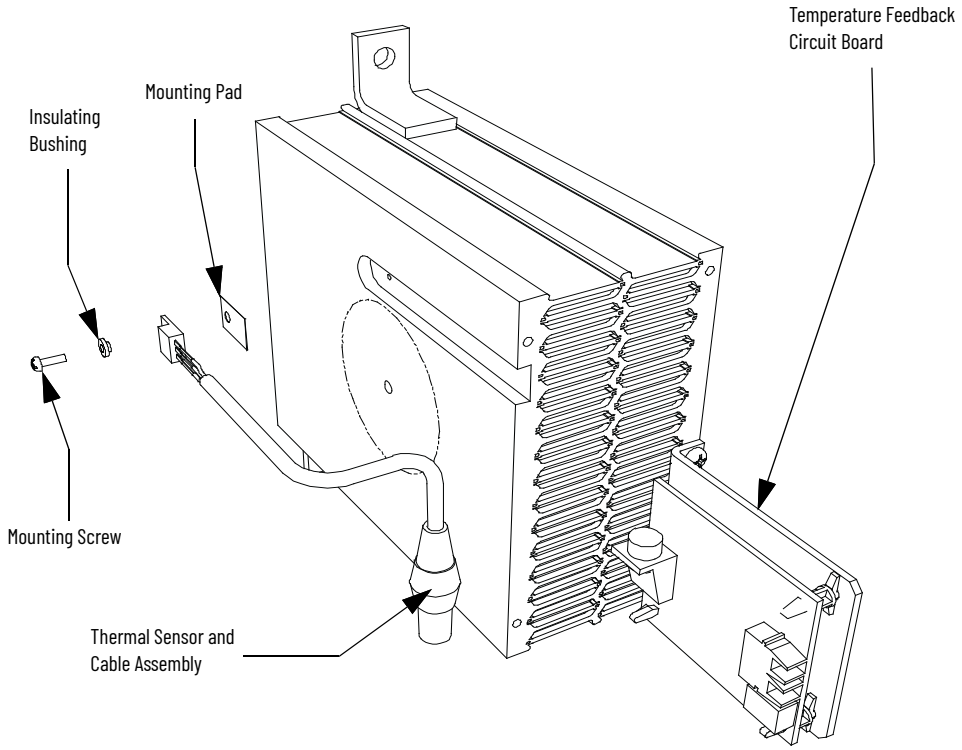

Figure 71 - Replacing the Thermal Sensor (if SPS Board is Installed)

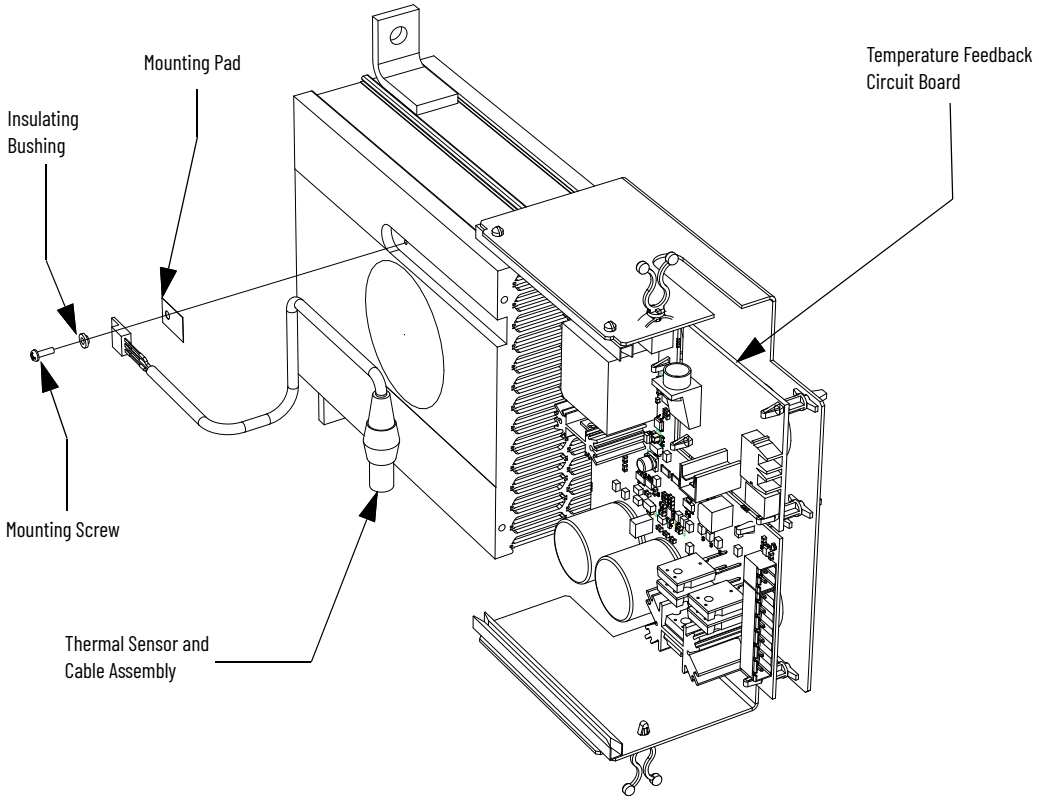

Heatsink Replacement

There are three different styles of heat sinks in PowerFlex air-cooled drives, depending on thermal requirements:

- Aluminum Type W heat sinks have a plurality of short internal fins along the internal surfaces.
- Aluminum Type M heat sinks have internal fins with flat surfaces.
- Copper heat sinks have internal fins that are made from folded copper foil.

Figure 72 - Heatsinks

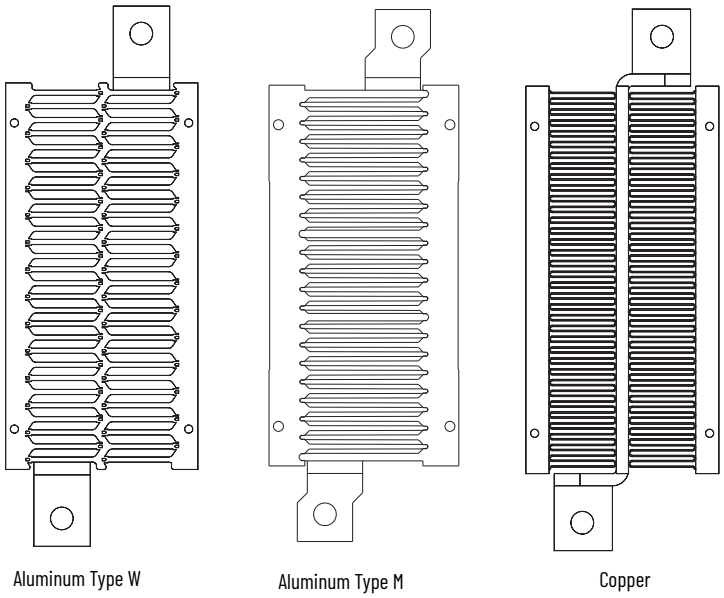

1. Verify that there is no power to the equipment.

ATTENTION: To avoid electrical shock, verify that the main power has been disconnected before working on the drive. Verify that all circuits are voltage free. Use a hot stick or appropriate voltage-measuring device. Failure to do so can result in injury or death.

2. Remove the load from the clamp head per the procedure on page 77.
3. Remove the SGCT from the heatsink that is being replaced per the instructions on page 70.
4. There are two13 mm bolts that secure the heatsink to the PowerCage module. Remove the bolts using extenders so the socket wrench is past the sensitive gate driver boards.

ATTENTION: Do NOT remove the pivot plate from the PowerCage. The pivot plate is located on the opposite end of the PowerCage from the clamp head. If the pivot plate is removed from the PowerCage, it must be replaced in the original orientation. See Figure 51 through Figure 56 for pivot plate location.

5. Loosen the two bolts and carefully remove the heatsink from the PowerCage module.
6. Install the new heatsink and hand-tighten the bolts.
7. Replace the SGCT per the instructions on page 70.

   See page 76 to verify that the heatsinks are clamped to a uniform pressure.

PowerCage Gasket

To make sure that all air movement is through the slots of the heatsinks, all air leaks are sealed with a rubber gasket. This gasket is placed between the surface of the PowerCage module and heatsink module. The gasket must be in place to keep the SGCTs cool.

Figure 73 - PowerCage Gasket Location

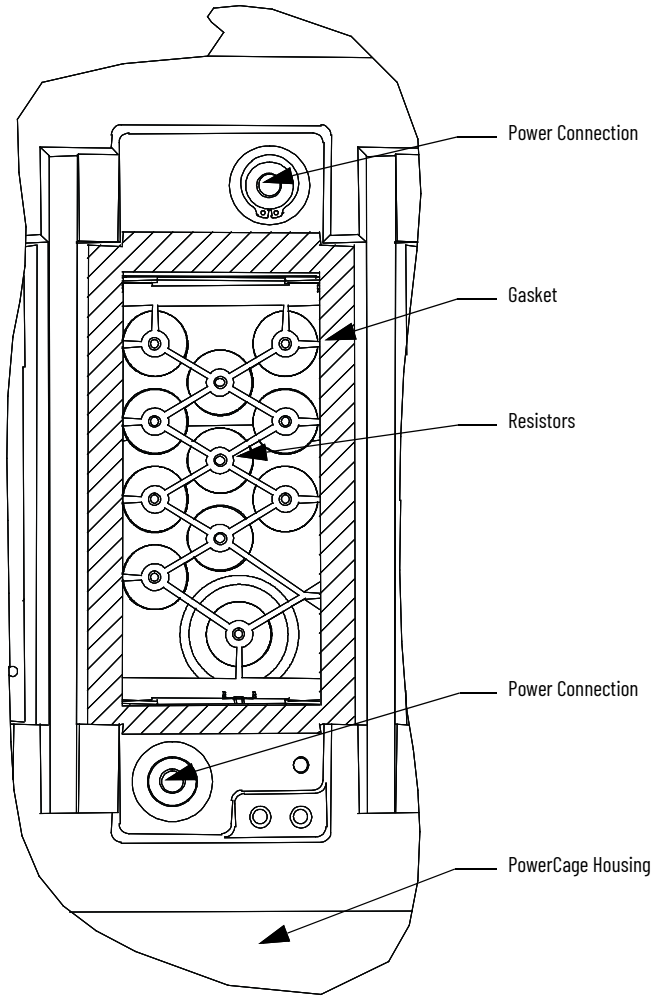

Replacement of PowerCage Gaskets

The gaskets do not normally require replacement, but when they become damaged, they can require replacement.

Removal of Old Gasket Material

Pull off all material possible by hand. Scrape off as much material as possible with a sharp knife. Do not score the PowerCage module with the knife. All material cannot come off! Remove as much as possible to leave an even surface to bond to. Clean away any loose pieces of gasket. Then proceed with installation of the gasket.

The PowerCage module must be cleaned with an all purpose household cleaner.

IMPORTANT	Do not spray cleaner onto the PowerCage module. The spraying promotes electrical tracking.

Apply the cleaner to a paper towel and wipe the surface of the PowerCage module where the gasket is applied. Liberally spray the surface with distilled water. Wipe the surface with a clean paper towel.

Apply a thin bead of Loctite 454 adhesive (use the original nozzle size) to the PowerCage module surface in a zigzag pattern. To spread the adhesive over 50% of the area, use the nozzle tip. Apply sufficient quantity of adhesive so that the adhesive remains wet long enough for the gasket to be applied. The adhesive uses the moisture in the air to cure. The higher the humidity the faster the adhesive cures.

IMPORTANT This adhesive will bond anything quickly, including fingers!

Position and orient the gaskets correctly, centered over the opening for the heatsinks with the narrow end positioned closest to the test points. Apply the porous surface of the gasket to the PowerCage module. The gasket bonds almost immediately. Apply some pressure to the gasket for 15...30 seconds.

PowerCage Module Removal

After all gaskets have been placed, check to see that the gasket has bonded properly. Repair any loose areas.

1. Verify that there is no power to the equipment.

ATTENTION: To avoid electrical shock, verify that the main power has been disconnected before working on the sensing board. Verify that all circuits are voltage free. Use a hot stick or appropriate voltage-measuring device. Failure to do so can result in injury or death.

2. Before removing the PowerCage module, all components that are located within the PowerCage module must be removed to avoid any damage to the components. To remove the clamping pressure, and remove the SGCT, circuit boards, and thermal sensor, consult the required sections.

ATTENTION: Static charges can damage or destroy the SGCT. Personnel must be properly grounded before circuit boards are removed from the PowerCage module. Use of damaged circuit boards can also damage related components. A grounding wriststrap is recommended for handling.

ATTENTION: Do NOT remove the pivot plate from the PowerCage. The pivot plate is on the opposite end of the PowerCage from the clamp head. If the pivot plate is removed from the PowerCage, it must be replaced in the original orientation. See Figure 51 through Figure 56 for pivot plate location.

3. Remove the M8 bolts in the two flanges that connect the heatsink to the PowerCage module. To make the PowerCage module, easier to handle and reduce weight, remove the heatsink from the PowerCage module.
4. To detach the PowerCage module itself, remove the bolts on the outer flange. Carefully lift down the PowerCage module and place the forward face down. Do not over-torque these bolts when replacing the PowerCage module.

IMPORTANT The PowerCage can be heavy. To avoid injury or damage to the module, two people are recommended to extract the PowerCage from the drive.

5. See appropriate section for component replacement.
6. When replacing the PowerCage module, place the bolts on the outer flange in loosely. Torque bolts alternately on one flange and then the opposite flange for tightening of the module. A suggested sequence for torquing PowerCage module bolts is shown in Figure 74.

Note: The PowerCage module is shown with switching components, heatsinks, and clamps removed for ease of lifting.

Figure 74 - Typical Torque Sequence

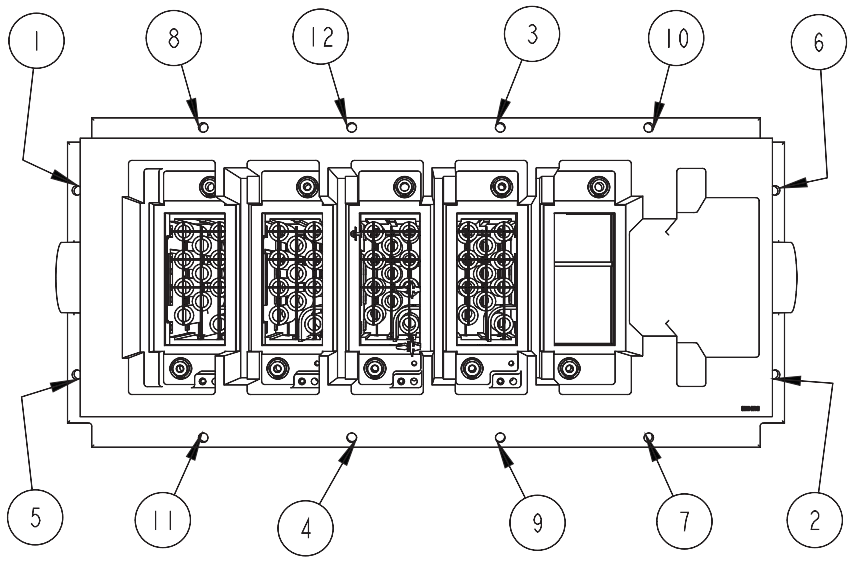

7. Replace interior assembly in the reverse order of removal.

Self-powered SGCT Power Supply - SPS

This board is a component in drives that does not use the IGDPS module to power the rectifier SGCTs. The SPS board extracts energy from the associated SGCT snubber circuitry to provide the 20V DC required to power the SGCT device.

The SPS Board has two snubber connection inputs and two 20V DC outputs. Snubber connection inputs are derived from opening the snubber capacitor to SGCT cathode connection and bringing these connections to the SPS board (Figure 75).

Figure 75 - Snubber Circuit for SGCT Module (with SPS Board)

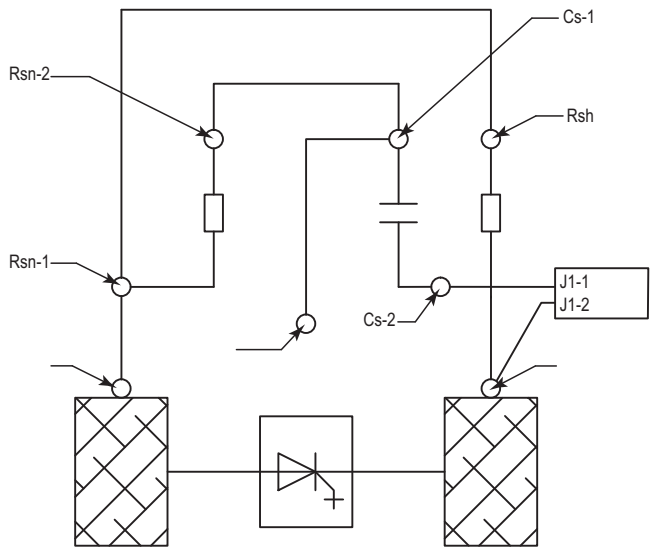

Board Calibration

This board requires no field calibration.

Test Points

TP4	300V DC bus
TP6	300V DC bus common
TP15	20V DC output
TP14	20V DC output common

The green Status Indicator (DS1) on the SPS board indicates that the 20V DC output is within operating specification range.

Figure 76 - SPS Board Test Points

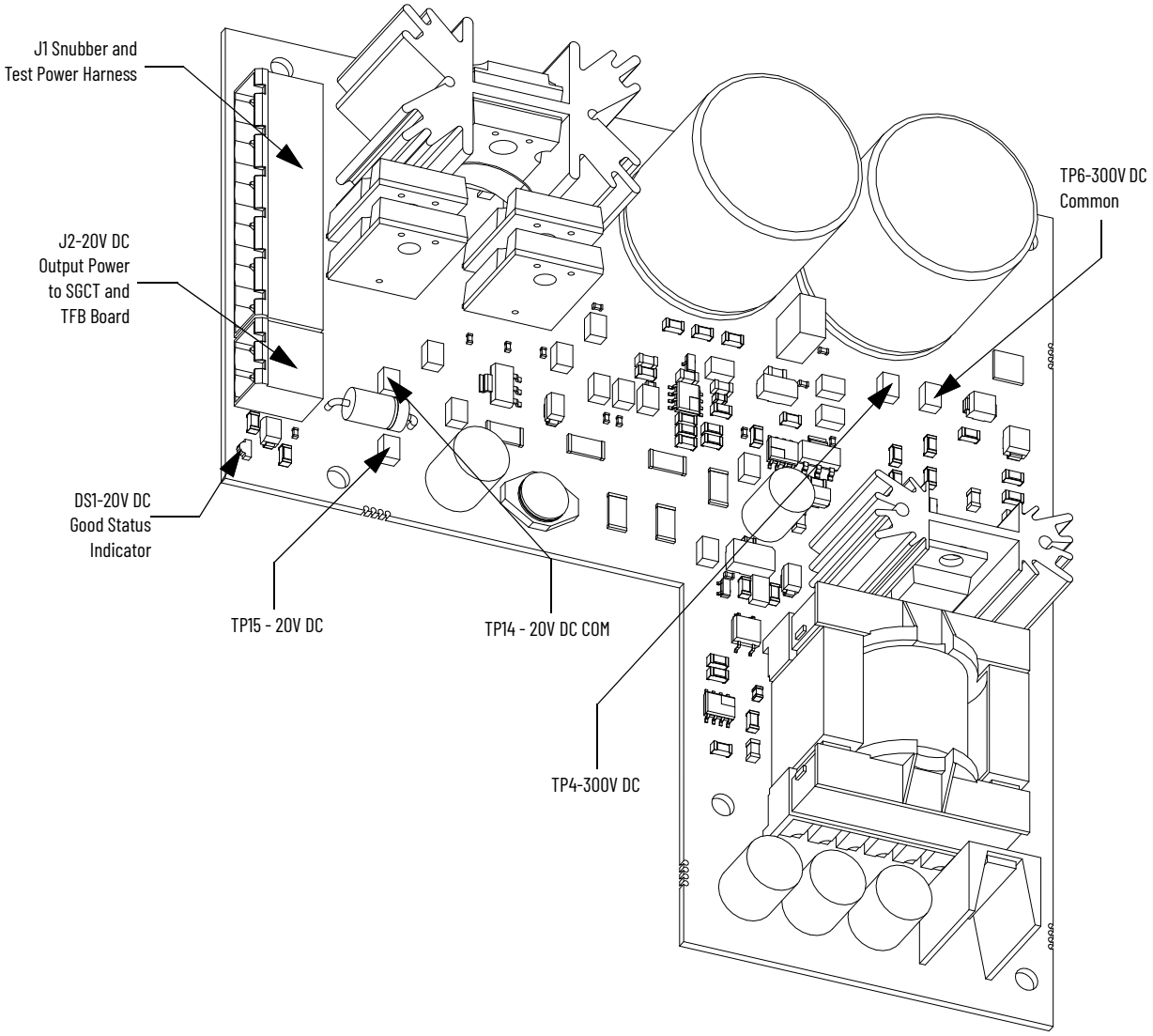

Terminal	Connections
J1 – 1	Connection to the SGCT snubber capacitor at CS-2 location
J1 – 2	Connection to SGCT cathode terminal
J1 – 3	Connection to input attenuated feedback (Short J1-3 to J1-4 to disable input SCR clamp stage for test power usage)
J1 – 4	Connection to 300V DC common connection (Short J1-3 to J1-4 to disable input SCR clamp stage for test power usage)
J1 – 5	Connection to 300V DC internal bus (Short J1-5 to J1-6 to allow input to operate from 90V AC)
J1 – 6	Connection to TOPSwitch programming resistor (Short J1-5 to J1-6 to allow input to operate from 90V AC)

Equipment for Testing

Verify that you have this equipment available to perform the testing tasks.

- SPS test power harness (80018-695-51).
- Digital multimeter.

1. Disconnect the snubber connection to J1 of the SPS board.
2. Connect one of the SPS test power harness connectors to the SPS J1 connector.
3. Plug the AC input end of the SPS test power harness into the appropriate drive receptacle.

   The green status indicator (DS1) at the front of the board must be on.
4. Measure between the TP4 and TP6 on the SPS board. The measurement must be at a level of $\sqrt{2} \times VIN_{RMS}$.

   This value can range 120V (85V input) … 375V (265V input).
5. Measure between TP15 and TP14 on the SPS board. The measurement must be at a level of 20V DC, +/- 400 mV.

   If these readings are not correct, replace the tested SPS board with a new board and return the faulty board to the factory.

ATTENTION: When the SPS test harness is installed and powered, there are lethal voltages on the SPS board. Always connect multimeter test leads to the SPS test points before input power is applied to the SPS test harness.

Always connect the SPS test harness connectors to the SPS board before input power is applied to the SPS test harness.

Some shorted components on the SPS board, cause the input breaker to the SPS test power harness to trip. For example any of the input diode bridge diodes D10, D11, D13, or D14. In this situation, replace with a new unit and return the faulty board to the factory.

ATTENTION: When testing with the SPS harness is complete, remove the test harness from all SPS boards and remove the SPS test harness from the power converter cabinet. Do NOT leave the SPS test harness in the power converter cabinet. Reconnect all SGCT snubber connections to the J1 connectors on the SPS boards.

Fiber-optic Cabling

The equipment is provided with fiber-optic cabling as a means of interfacing the low voltage control to the medium voltage circuits. The rerouting of the fiber-optic cables is not be required.

Each end of a fiber-optic cable is provided with a connector that plugs and latches into its respective location on a circuit board. To disconnect a fiber-optic cable, depress the ridged plastic tab at the end connector and pull. To install a fiber-optic cable, insert the fiber-optic port of the circuit board so that the plastic tab latches into place.

To replace fiber-optic cables, take care to avoid the cables from becoming strained or crimped as a resulting loss in light transmission results in loss in performance.

The minimum bend radius that is permitted for the fiber-optic cables is 50 mm (2.0 in.).

When installing the fiber-optic cable, the color of the connector at the end of the cable must match the color of the connector socket on the circuit board.

Lengths of fiber-optic cables that are used in the product include:

Duplex	Simplex
5.0 m (197 in.)	5.0 m (197 in.)
5.5 m (216.5 in.)	6.0 m (236.2 in.)
6.0 m (236.2 in.)	10.0 m (292.7 in.)
6.5 m (255.9 in.)	
7.0 m (275.5 in.)	

There is one duplex fiber-optic for each thyristor, which manages gating and diagnostic functions. The circuitry on the respective driver boards determines the health status of the thyristor. This information is then sent to the main processor by way of a fail-safe light signal in the fiber-optic. The main processor initiates the firing command for the thyristor and transmits it to the appropriate gate driver board by way of the gating fiber-optic.

The color codes of the connectors are:

- BLACK or GREY – is the transmitting end of the fiber-optic.
- BLUE – is the receiving end of the fiber-optic.

Air Pressure Sensor

An air pressure sensor is in the converter cabinet and the integral rectifier transformer cabinet (if applicable). In both cases, the sensor is in the upper left-hand quadrant of the cabinet.

Figure 77 - Air Pressure Sensor

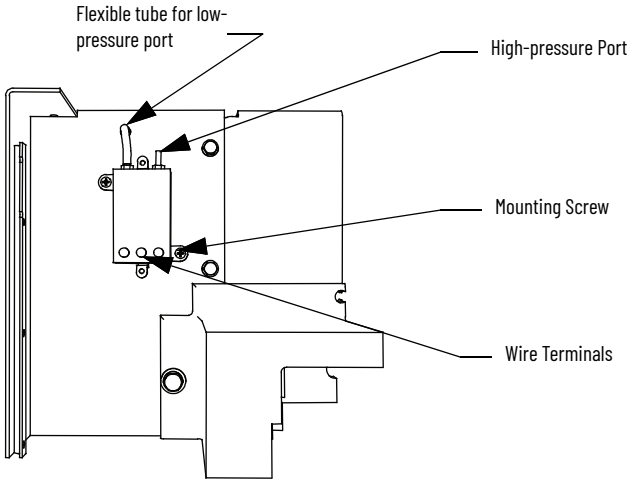

The air pressure sensor measures the difference in air pressure between the front and rear of the converter modules/integral rectifier transformer. A small direct current voltage signal is transmitted to the control circuits.

If reduced fan performance or air blockage occurs, for either the converter or the transformer, a message is sent. The measured differential pressure is reduced and a warning message appears on the console. A likely cause of the warning message would be blocked filters at the inlet.

If, as a result of blockage or fan failure, there is a risk of thermal damage for either the converter or transformer, a fault signal causes drive shutdown.

Air Pressure Sensor Replacement

1. Remove the wires at the sensor and note their designation.
2. Disconnect the clear tube on the low-pressure port. Remove the two mounting screws of the sensor.
3. Check the integrity of the sealant that has been applied where the clear tubing passed through the sheet metal barrier.
4. Installation of the replacement airflow sensor is in the reverse order of its removal.

D.C. Link / Fan / Control Components

Figure 78 - DC Link and Fan Cabinet, Low Voltage Control Tub Shown

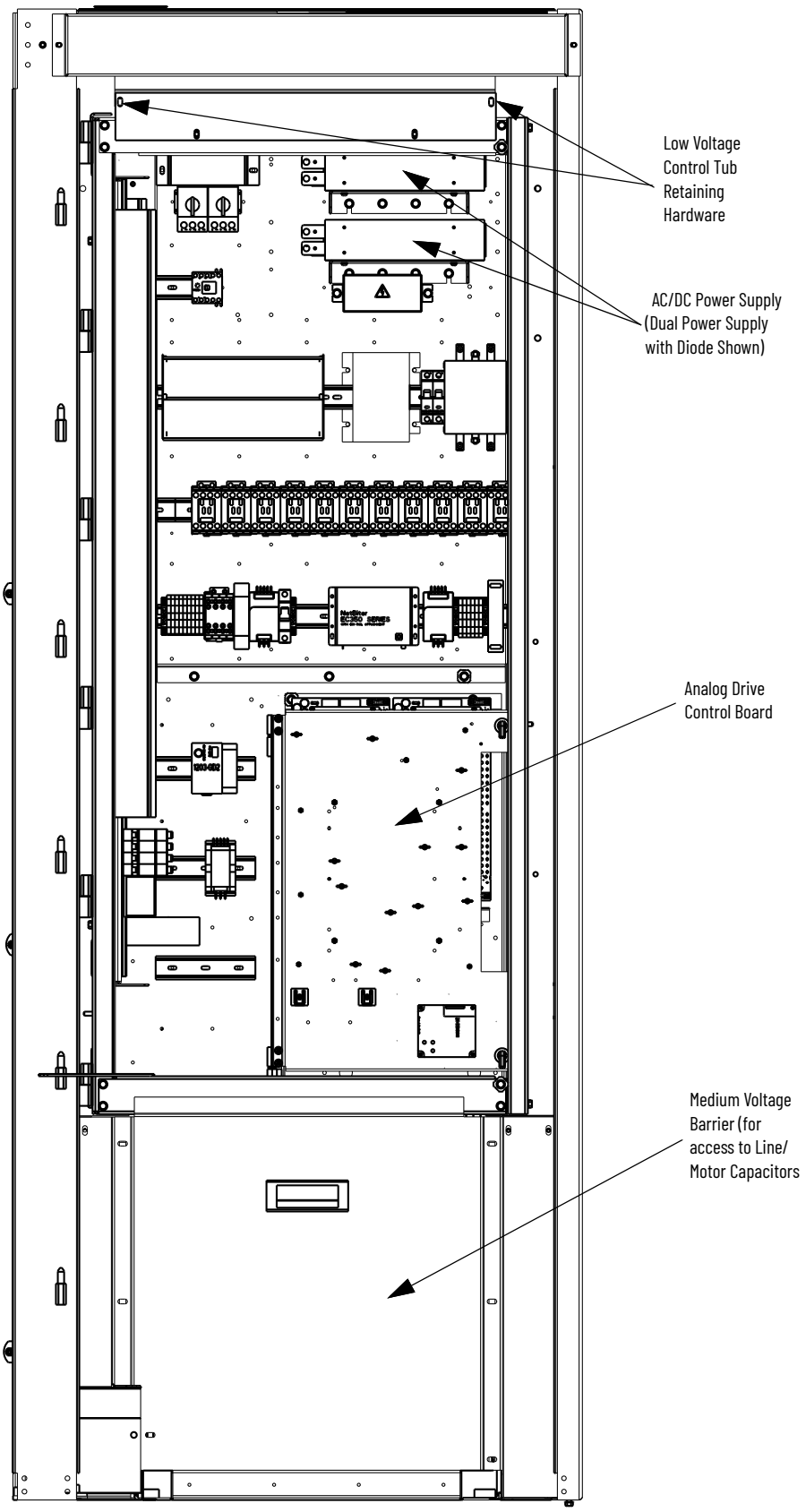

Figure 79 - DC Link and Fan Cabinet, Low Voltage Control Tub Removed

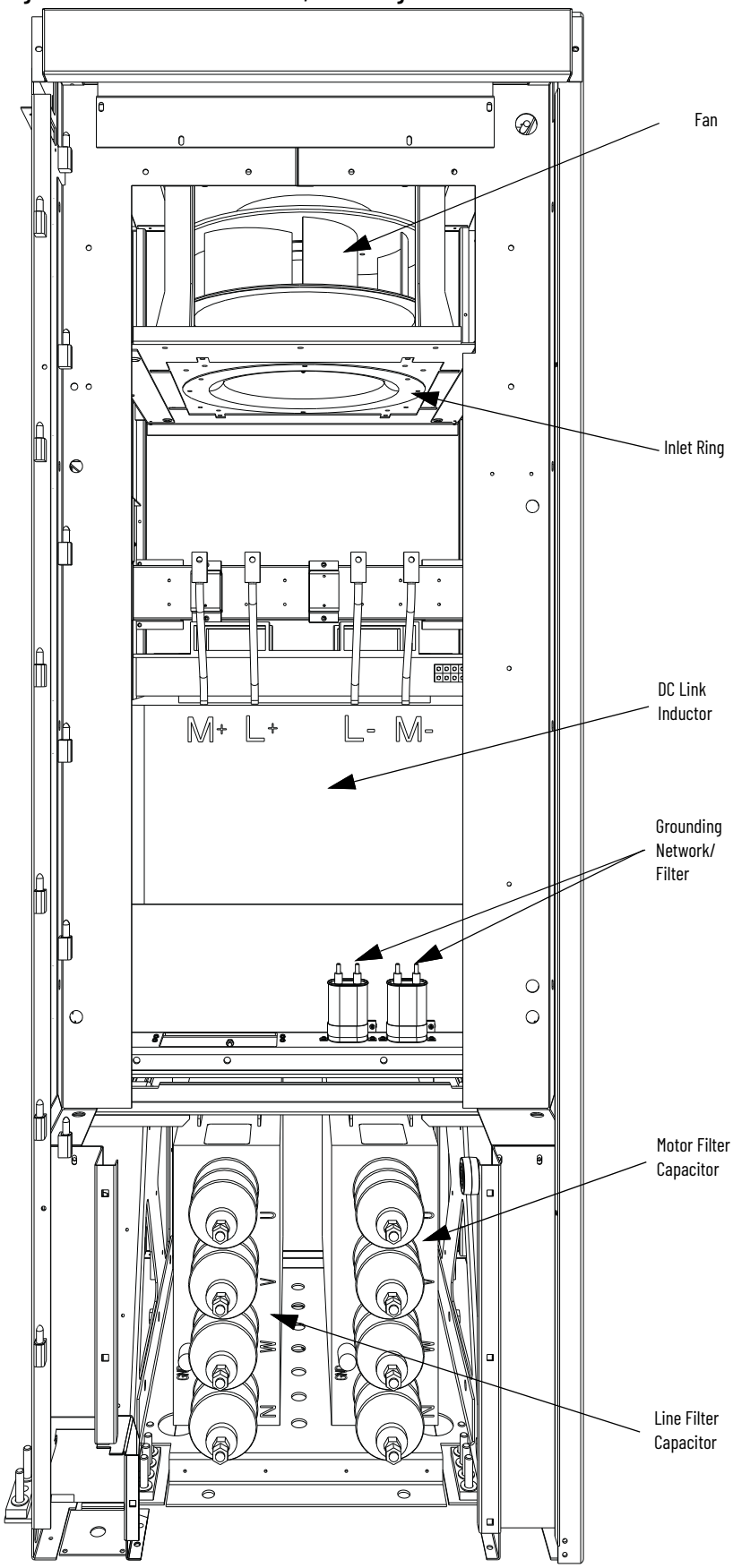

When the door is opened, control components are accessible. Behind the low voltage swing-out panel is the medium voltage compartment where the DC

link and fan are located. The DC link is mounted on the floor plate of the cabinet above the capacitors.

Power connections are made to the inductor by way of its flexible leads. There are four power connection points that are labeled L+, L-, M+, and M-.

The DC link is equipped with thermal protection for the windings.

There is a current sensor on the M+ conductor.

The fan is located above the DC link; the primary elements of the fan are the inlet ring, impeller, and motor.

IMPORTANT The inlet ring is stationary and must not contact the rotating impeller.

Mounted on top of the cabinet is an air exhaust hood. The exhaust hood must be installed to avoid foreign objects from entering the drive.

Output Grounding Network Replacement

PowerFlex 7000 drives can have either a grounding network or a ground filter in place of the grounding network. The number of capacitors vary depending on the system voltage.

1. Verify that there is no power to the equipment.

ATTENTION: To avoid electrical shock, verify that the main power has been disconnected before working on the capacitor. Verify that all circuits are voltage free. Use a hot stick or appropriate voltage-measuring device. Failure to do so can result in injury or death.

2. Note the position of the leads.
3. Remove the 6.4 mm (¼ in.) hardware and disconnect the leads connected to the terminals.
4. Four brackets are used to secure the capacitor. Loosen the four screws at the base of the brackets and lift out the capacitor.
5. Place the new capacitor and tighten the screws securely.
6. Replace the ring lugs and 6.4 mm (¼ in.) hardware (Figure 80).

IMPORTANT The maximum torque for the capacitor terminal is 3.4 N•m (30 lb•in.).

Figure 80 - Output Grounding Network

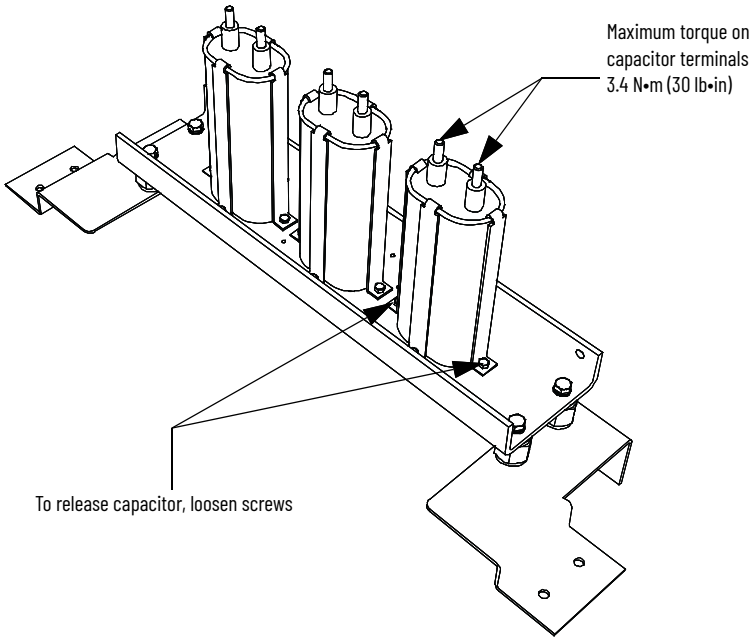

Ground Filter Component Replacement

The number of capacitors vary depending on the system voltage.

1. Verify that there is no power to the equipment.

ATTENTION: To avoid electrical shock, verify that the main power has been disconnected before working on the capacitor. Verify that all circuits are voltage free. Use a hot stick or appropriate voltage-measuring device. Failure to do so can result in injury or death.

   Note the position of the leads.
2. Disconnect the leads connected to the failed capacitor/resistor bank.
3. Loosen and remove the mounting screws as indicated in Figure 81. Remove the failed component.
4. Assemble the new component in the reverse order of disassembly.
5. Reattach the leads strictly adhering to these torque requirements.

IMPORTANT The maximum torque for the capacitor terminal is 3.4 N•m (30 lb•in.).

Figure 81 - Ground Filter Component Replacement

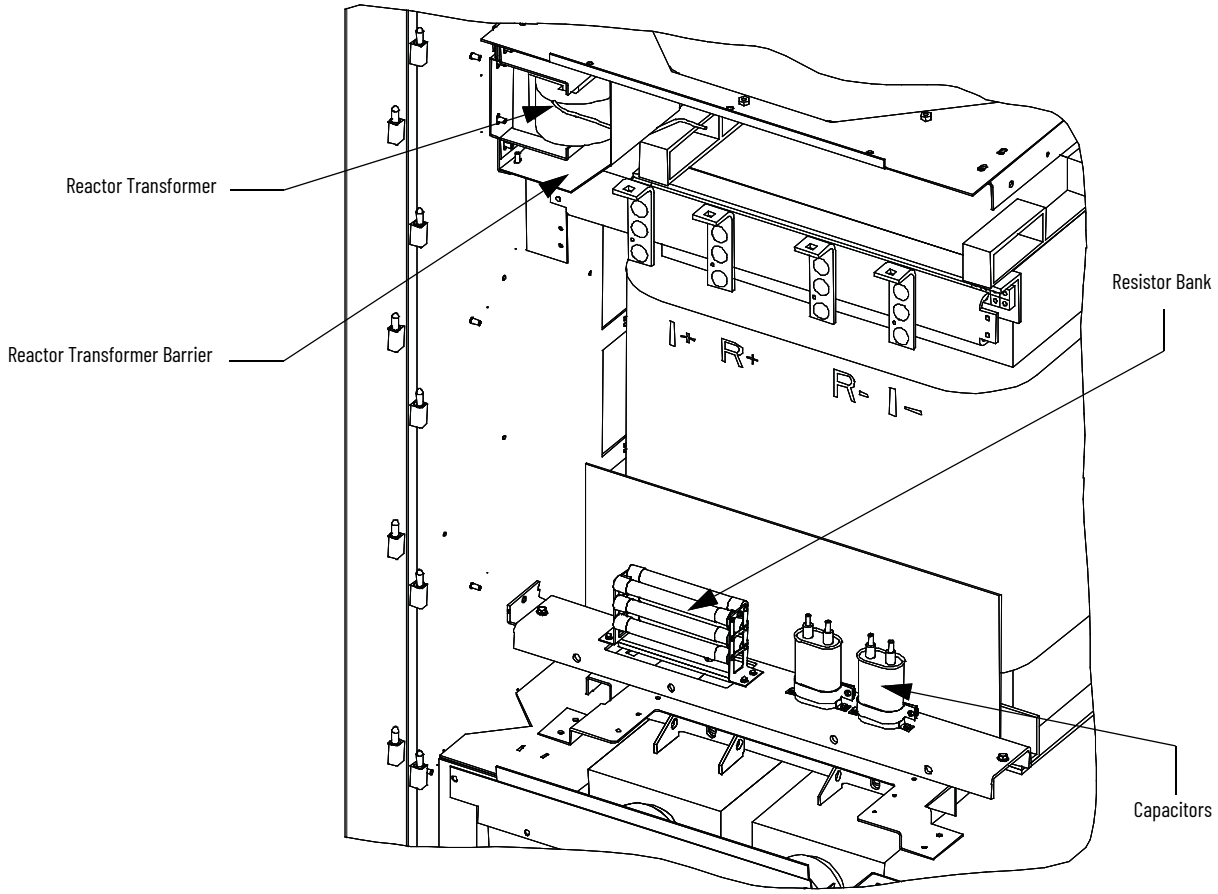

Filter Capacitors

Filter capacitors are used on the motor side for all drives. The AFE rectifier also includes filter capacitors on the line side (see Figure 79).

The filter capacitors units are three-phase four-bushing and "oil-filled". The three-phase capacitors are composed of internal single-phase units that are connected in a Y configuration. The neutral point of the Y is connected to the fourth bushing, which is accessible and can be used measure neutral point voltage or other protection/diagnostics purposes. Depending on the drive configuration, the fourth bushing can or cannot be connected to circuitry. The metal cases of the capacitors are grounded through a stud on the capacitor housing.

The capacitors are equipped with internal "bleeding resistors" to discharge the capacitor and reduce its voltage below 50V in 5 minutes when left disconnected. A typical three-phase capacitor is shown in Figure 82.

Figure 82 - Motor Filter Capacitor

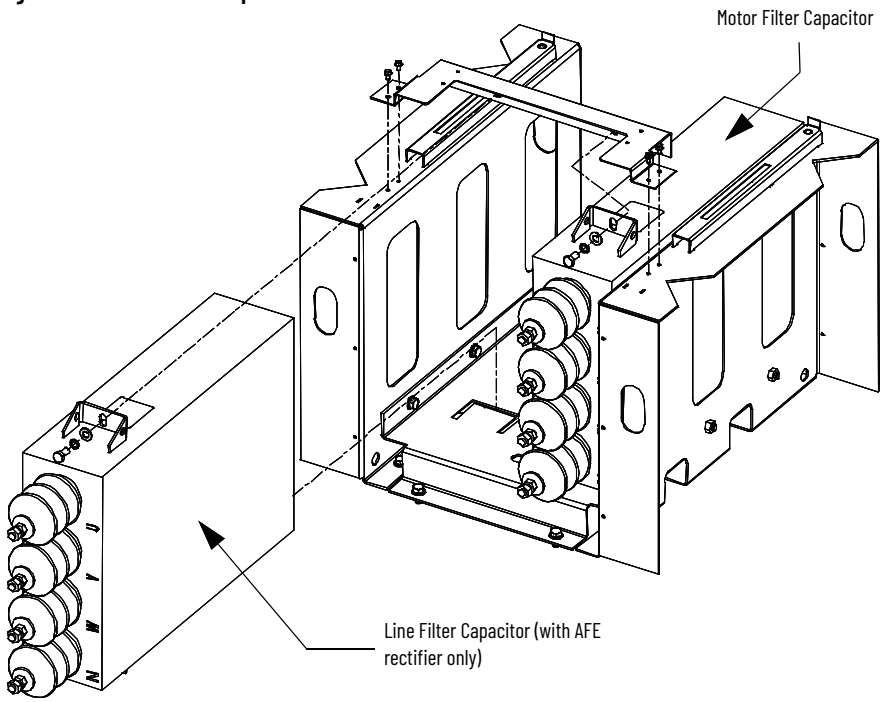

ATTENTION: Allow 5...10 minutes for motor capacitors to discharge voltage safely, before the cabinet doors are opened.

ATTENTION: Verify that the load is not turning due to the process. A freewheeling motor can generate voltage that is back-fed to the equipment being worked on.

WARNING: The following fault codes may also indicate a non-operational Motor Filter Capacitor (MFC):

F96 (Motor Overcurrent Fault)
F98 (Motor Neutral Overvoltage Fault)
F99 (Motor Flux Unbalance Fault)
F100 (Motor Current Unbalance Fault)
F103 (Motor Stall Fault)
F113 (DC Link Overcurrent Fault)
F114 (Ground Overcurrent Fault)
F115 (Neutral Resistor Overcurrent Fault)
F145 (Neutral Resistor Overload Fault)

Do not reset these faults until you have determined the root cause of the fault.

Operating a synchronous transfer system (specifically during the 'Transfer to Drive' operation, also known as the de-sync operation) with a non-operational MFC can lead to serious personal injury and/or property damage.

Replacing the Filter Capacitors

See Publication 7000-IN010, "Handling, Inspection, and Storage of Medium Voltage Line Filter Capacitors".

1. Isolate and lockout all power to the drive.

ATTENTION: To avoid electrical shock, verify that the main power has been disconnected before working on the capacitor. Verify that all circuits are voltage free. Use a hot stick or appropriate voltage-measuring device. Failure to do so can result in injury or death.

ATTENTION: Verify that the load is not turning due to the process. A freewheeling motor can generate voltage that is back-fed to the equipment being worked on.

2. Remove medium voltage barrier below the low voltage panel to access capacitor (Figure 78).
3. Short all four bushings together and to ground on both capacitors before handling the connections. Note the location of all cables and mark them accordingly.
4. Remove the four power connections to the terminals, and the single ground connector from the drive to the capacitor frame.
5. Remove the grounding network and top bracket that holds the capacitor in place. At the bottom of the capacitor, there is no hardware securing the capacitor. The capacitor fits into a slot in the assembly.
6. Remove the capacitor from the drive. The capacitors can weigh up to 100 kg (220 lb); two people can be required to remove them.

IMPORTANT Do not lift capacitor by bushing as it can damage bushings and result in oil leakage.

ATTENTION: The porcelain bushings are fragile. Any force that is applied to the bushings can damage the seal, between the bushing and the body, and can cause potential leaks or chips.

7. Install the new capacitor. Slide the capacitor back into the slot. Fasten the top bracket and grounding network.
8. Reconnect all power cables and the ground connection. The connections use the M14 hardware, but must only be tightened to 25 N•m (19 lb•ft) due to capacitor mechanical constraints.

IMPORTANT Use two wrenches to tighten the nuts to prevent damage to the capacitor.

9. Remove any shorting/grounding conductors.
10. Reinstall the sheet metal that was removed, and verify that connections are secure and correct.

Testing the Filter Capacitors

There are two ways to test line filter capacitors. The first method is recommended, to reduce the chance of retorque issues, because the capacitors are not disconnected. If the readings are unsatisfactory, the second method is more accurate, but involves disconnecting and testing them individually.

First Method

1. Verify that there is no power to the equipment.

ATTENTION: To avoid electrical shock, disconnect the main power before working on the drive. Verify that all circuits are voltage-free. Use a hot stick or appropriate voltage-measuring device. Failure to do so can result in injury or death.

ATTENTION: Verify that the load is not running due to process. A freewheeling motor can generate voltage that feeds back to the equipment.

2. Isolate the equipment from medium voltage. Follow all safety steps.
3. Verify that there is no voltage present on the capacitor by using a hot stick or any other appropriate voltage-measuring device.
4. Verify that there is no oil leak or bulge in any of the capacitors.

ATTENTION: Capacitors that appear bulged or are leaking oil indicate potential problems with the internal elements. DO NOT USE. These units must be replaced. Failure to do so can lead to personal injury or death, property damage, or economic loss.

5. Using a DMM, measure the capacitance across each phase-to-neutral of capacitors without removing any connections.

   If the difference between the highest and the lowest readings is below 15%, then all capacitors are in good condition. If the difference between the highest and the lowest readings is off by 15% or more, then a bad capacitor can be the cause. If multiple capacitors are used in the circuit, isolate each of them and check them separately to identify which one is defective.
6. Before disconnecting the capacitors, note the location of all cables and mark them accordingly.
7. Disconnect power cables from the capacitor terminals on all four bushings and isolate them from the capacitor (see Replacing the Filter Capacitors on page 95).
8. Repeat step 5 to check each capacitor separately to confirm which is defective.

Second Method

1. Verify that there is no power to the equipment.

ATTENTION: To avoid electrical shock, disconnect the main power before working on the drive. Verify that all circuits are voltage-free. Use a hot stick or appropriate voltage-measuring device. Failure to do so can result in injury or death.

ATTENTION: Verify that the load is not running due to process. A freewheeling motor can generate voltage that feeds back to the equipment.

2. Verify that there is no oil leak or bulge in any of the capacitors.

ATTENTION: Capacitors that appear bulged or are leaking oil indicate potential problems with the internal elements. DO NOT USE. These units must be replaced. Failure to do so can lead to personal injury or death, property damage, or economic loss.

3. Note the location of all cables and mark them accordingly.
4. Disconnect power cables from the capacitor terminals on all four bushings and isolate them from the capacitor (see Replacing the Filter Capacitors on page 95).
5. Connect a low voltage single-phase test power, for instance 110V or 220V, across a phase and the neutral of the capacitor. Switch on the test power and measure the test voltage and current drawn by the capacitor. Repeat the test for all three phases and note down the test voltage and current.

ATTENTION: The capacitor charges during this test. Use caution to avoid shock or injury. When moving the test connections from one phase to the next, wait a minimum of 5 minutes for the capacitor to discharge.

6. Calculate the capacitance from the measured values of test voltage and current. For a good capacitor, the calculated capacitance value for each of the three readings must be within ±15% of the capacitor nameplate micro-Farad. If the readings are outside this range, the capacitor must be replaced.

This example demonstrates the calculation for capacitance value.

Suppose that a capacitor under test is rated at 400 kVAR, 6600V, 50 Hz, 29.2 µF. Assume that you are using 200V, 50 Hz test power with the recorded voltage, and current values for each test as shown in this table.

Phase - Neutral	L1-N	L2-N	L3-N
Test Voltage	200V	200V	200V
Measured Current	1.87 A	1.866 A	1.861 A

Calculate the capacitance by using the first reading. In this case:

V = 200V, I = 1.87 for L1-N Xc = V/I = 200/1.87 = 106.95 C= 1/ (2 π *F* Xc) C= 1/(2 x 3.14 x 50 x 106.95 C=29.7µ *F*	Where: *F* = frequency of the applied voltage.

Similarly, you can calculate the capacitance for the remaining two measurements for L2-N and L3-N.

DC Link Reactor and CMC Replacement

The DC Link maintains a low ripple current between the rectifier and the inverter.

ATTENTION: To avoid electrical shock, verify that the main power has been disconnected before working on the current transformer. Verify that all circuits are voltage free. The DC Link can be hot. Use a hot stick or appropriate voltage-measuring device. Failure to do so can result in injury or death.

The DC link reactor does not normally require service. If it is replaced, Rockwell Automation must approve the replacement link. The link is cooled by air that is drawn through its coils.

To service the DC link, see Figure 83. For more information, see publication 7000-IN003.

1. Verify that the power source to the drive is locked out and that the filter caps are fully discharged.
2. Open the door to the DC link cabinet and remove the screws that retain the sheet metal barrier and low voltage panel.
3. Swing the low voltage panel to the left and disassemble the closing barriers that are on the left and right-hand side of the panel. Remove the nuts and washers that secure them to the sides of the structure.

   Depending on the size of the DC link, it might be necessary to remove the low voltage panel. Lift the panel off its hinges and shift or rotate the panel so it does not obstruct the opening to the DC link cabinet. Confirm that the equipment that is used to lift the panel is adequate to do this.
4. Disconnect the four power connections. The DC link is equipped with flexible power leads.
5. Disconnect wires at terminal block on DC link for thermal switch.
6. Remove the hardware that secures the DC link.
7. Disconnect the ground connection.

The DC link is heavy and has provision for lifting with forks of a lift truck.

Figure 83 - DC Link Removal

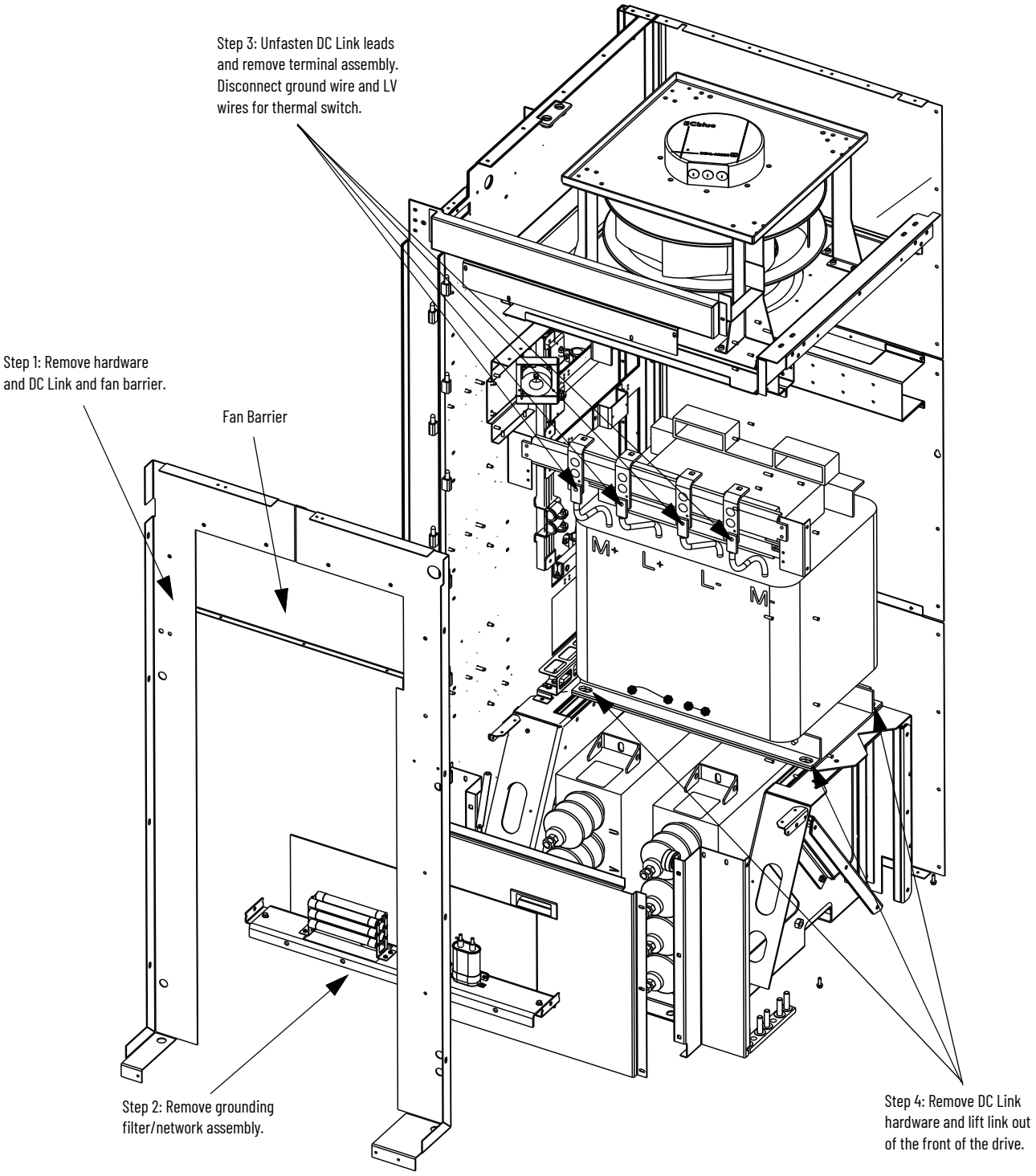

Installation of the replacement DC link is performed in the reverse order of its removal.

The installer must verify that the flexible DC link leads are connected to the appropriate terminal and routed so that electrical clearances are maintained. Verify that the nameplate ratings are the same or appropriate for the drive system. Another DC link requires different parameter settings.

Thermal protection of the DC link reactor is provided by two contacts (normally closed) wired to the I/O module. These contacts open at 190 °C (374 °F) and cause a fault/alarm message to be displayed.

Fan Replacement

There are several models of cooling fans that are used in PowerFlex drives. Different fan types can be used in the various locations throughout the drive.

DC Link Section

The fan consists of a motor impeller assembly. To replace the fan, you must remove the fan exhaust hood (see Installation of Exhaust Air Hood on page 26). Fan replacement requires work at a significant height from the floor. Make a suitable platform from which to work. The fan motor weighs approximately 45 kg (100 lb).

ATTENTION: To avoid electrical shock, verify that the main power has been disconnected before working on the current transformer. Verify that all circuits are voltage free. Use a hot stick or appropriate voltage-measuring device. Failure to do so can result in injury or death.

To replace the fan, follow these steps:

1. Open the DC Link cabinet, and swing out the LV panel (Figure 79).
2. Disconnect the power leads to the fan motor.

IMPORTANT Note the terminal locations so that proper fan rotation is maintained.

3. Remove and retain the four M8 nuts that secure the fan assembly to the mounting bracket (Figure 84).
4. Using a crane, hoist, or similar lifting provision, affix tie straps around opposite vertical brackets of the fan assembly and carefully lift the fan assembly out of the cabinet.

ATTENTION: Do not support the assembly on the impeller or damage can result.

Figure 84 - Fan Removal

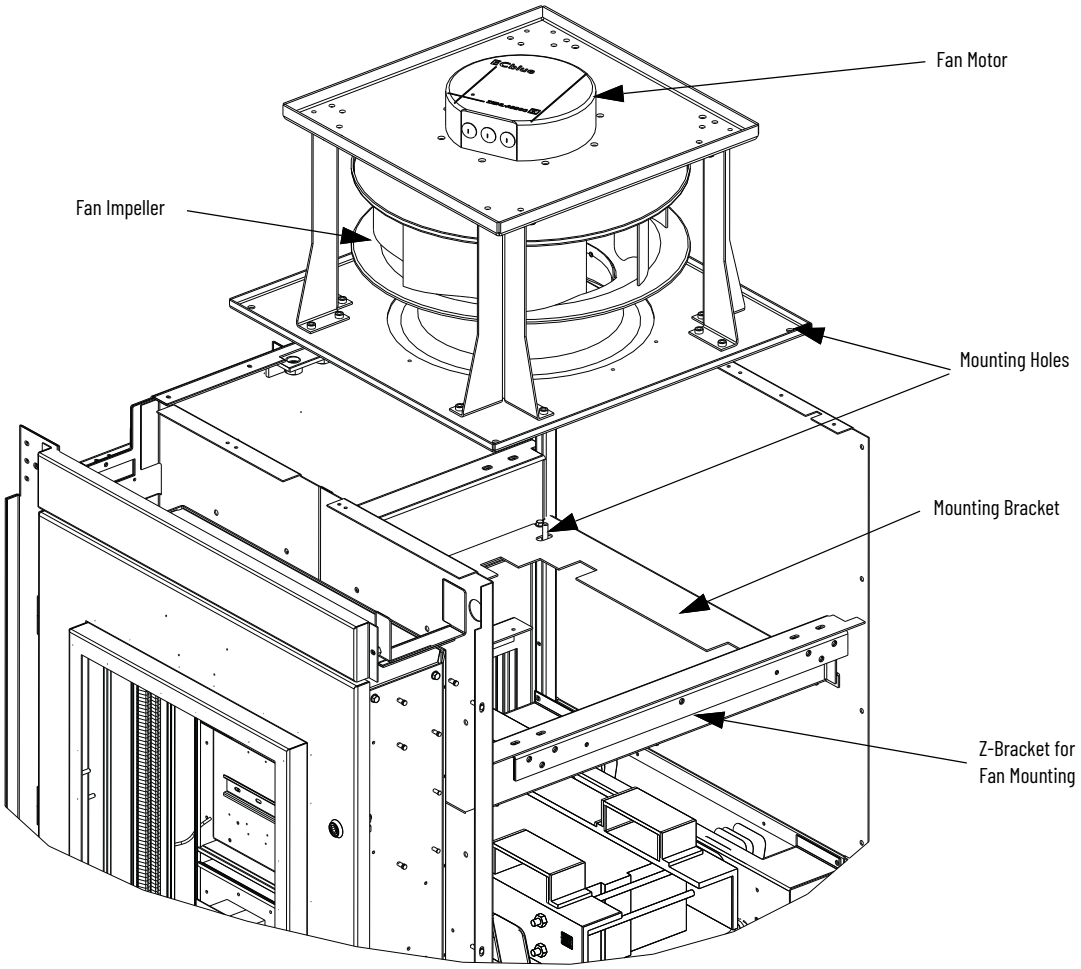

Fan Installation

Handle the fan assembly with extreme caution. If handled improperly, the fan becomes unbalanced.

Fan installation is performed in the reverse order of its removal. Rotate the impeller by hand to make sure that there is no contact with the inlet ring.

Top of Integral Isolation Transformer Section

Figure 85 - Isolation Transformer Fan Removal

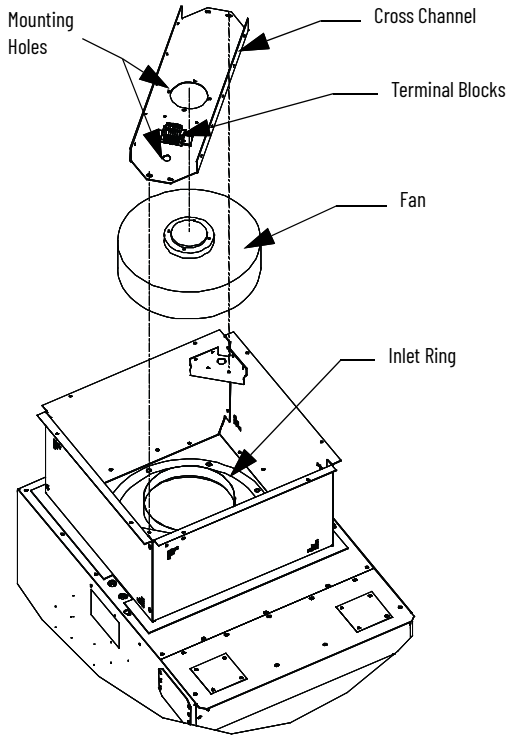

1. Remove the top plate of the ventilation housing and label fan supply leads before disconnecting.
2. Remove the bolts that retain the cross channel and withdraw the fan and channel from housing.
3. Disassemble and replace the fan.
4. Reassemble in the reverse order of removal.

Top of Integral Line Reactor and Input Starter Section

Figure 86 - Starter/Line Reactor Cabinet Fan Removal

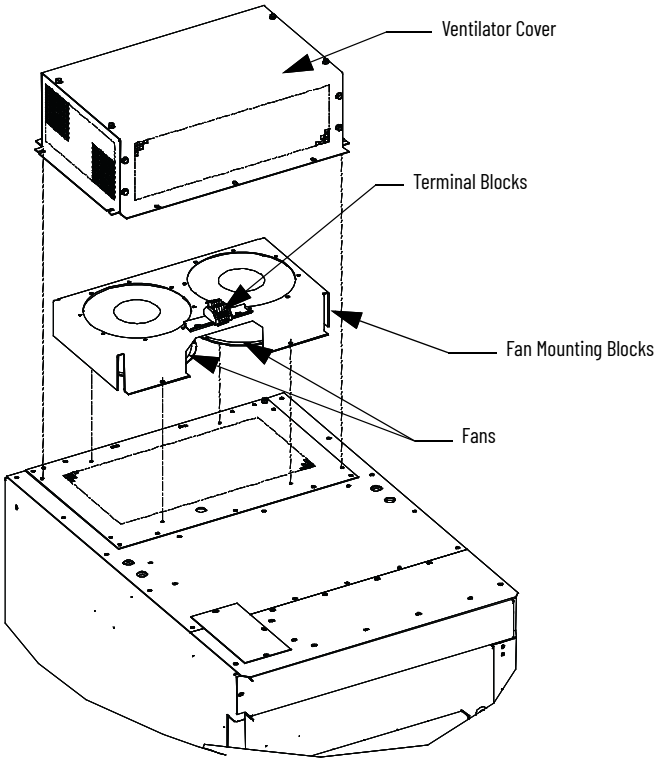

1. Remove the top ventilation cover from the exterior of the cabinet.
2. Expose the mounting hardware of the fan by removing the mounting screws. Invert the fan mounting bracket.
3. Unplug or disconnect fan leads from terminal blocks and replace fan.
4. Reassemble in the reverse order of removal.

Impeller Maintenance

Isolation Transformer Cooling Fan

The isolation transformer fan motor and impeller is an integral unit and cannot be serviced separately.

Inlet Ring Removal and Replacement

The inlet ring is the large circular part that is located beneath the fan impeller. It is positioned such that the impeller sits outside but does not touch the ring. The ring sits inside the impeller 10 mm (0.40 in.).

This procedure requires coming in contact with the internal electrical connectors and devices.

ATTENTION: All power MUST be removed from the drive. Failing to do so can result in serious injury or death.

Precautions must be taken to keep the inlet ring from falling after all bolts have been removed.

ATTENTION: To avoid electrical shock, verify that the main power has been disconnected before working within the DC Link and Fan Area. Verify that all circuits are voltage free. Use a hot stick or appropriate high voltage-measuring device. Failure to do so can result in injury or death.

DC Link / Fan Section

If rear panel access is possible, remove rear middle panel of the DC link / fan portion of the cabinet and remove the inlet ring from the back.

Procedure

If rear panel access is not possible, follow this procedure:

1. Remove bolts and swing-out low voltage panel (see Figure 78).
2. Remove bolts from the inlet ring being careful not to allow the ring to fall.
3. Remove inlet ring by way of the bottom access panel. Move the inlet ring around the DC link and diagonally out the door. Shifting of the DC link can be required.
4. To install the new ring, reverse steps 1…3. To verify that there is no contact with the inlet ring, rotate the fan impeller by hand. Move the ring and retighten bolts to help mitigate interference.
5. Replace all panels and barriers that are opened or removed during inlet ring replacement.

Top of Integral Isolation Transformer Section

1. Remove fan as described in “Fan Replacement”.
2. Disassemble bolts and remove inlet ring.
3. To install new ring, reverse the steps 1 and 2. To verify that there is no contact with the inlet ring rotate the fan impeller by hand. Move the ring and retighten bolts to help mitigate interference.
4. Replace all panels and barriers that are opened or removed during inlet ring replacement.

Replacement of Air Filters

ATTENTION: For arc resistant drives, equipment is not rated as arc resistant while the filter covers are open. Filter covers must be bolted closed to maintain arc resistant structural integrity

Air filters are at the cooling air intake grille that is mounted on the door in front of the converter, line reactor, and transformer cabinets.

Periodically, remove and clean, or remove and replace the filter material. If the air for cooling is dirty, renew filters frequently.

Filters can be renewed while the drive is running, but the procedure is easier to perform while the drive is shut down.

1. Use an 8 mm (5/16 in.) Hex key to loosen the ¼ turn fasteners and swing open the hinged grill assembly.
2. Remove filter material.

If the drive is running, replace the filter as soon as possible so foreign material is not drawn into the drive.

IMPORTANT Keep dirt that is accumulated on the inlet side of the filter from being sucked into the drive. To remove the filter material without tearing the filter is difficult, due to the suction at the air inlet

Recommended methods to clean the filter:

- **Vacuum Clean** – vacuum the inlet side of the filter to remove accumulated dust and dirt in seconds.
- **Blow with Compressed Air –** point compressed air nozzle in opposite direction of operating airflow. Blow from exhaust side toward intake side.
- **Cold Water Rinse –** normally the foam that is used in the filters require no oily adhesives. Use a standard hose with plain water to was collected dirt away. **(Verify that filter is dry before reinstalling)**.
- **Immersion in Warm Soapy Water** – Where stubborn air-borne dirt is present, the filter can be dipped in a solution of warm water and mild detergent. Rinse in clear clean water. **(Verify that filter is dry before reinstalling).**

Use only replacement filters that are provided, or approved for use by Rockwell Automation Replacement of the filters is performed in the reverse order of its removal. Check that there are no openings that would allow foreign matter into the drive.

Figure 87 - Filter Replacement

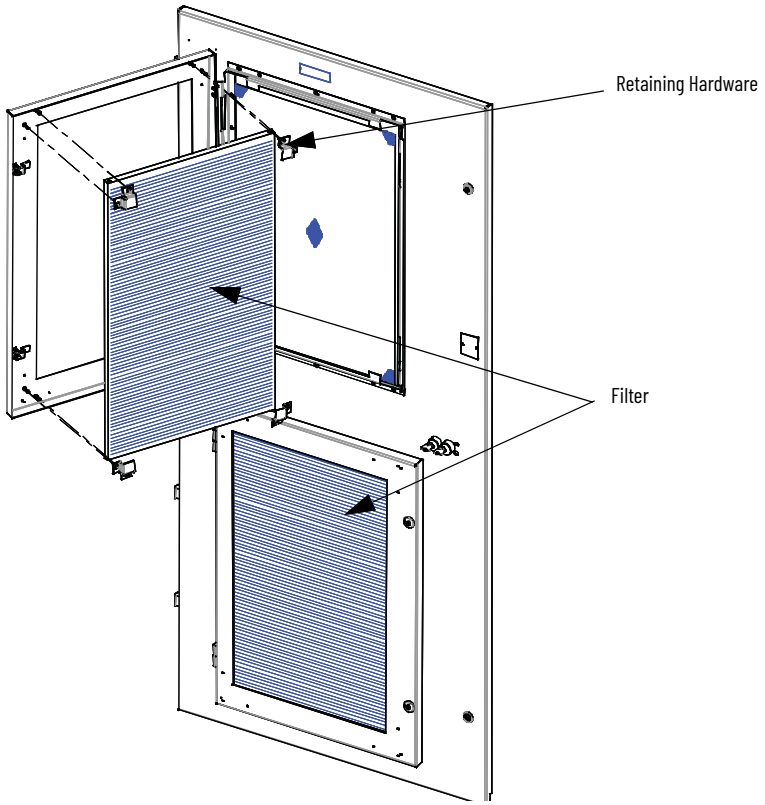

Figure 88 - Airflow Through PowerCage Module

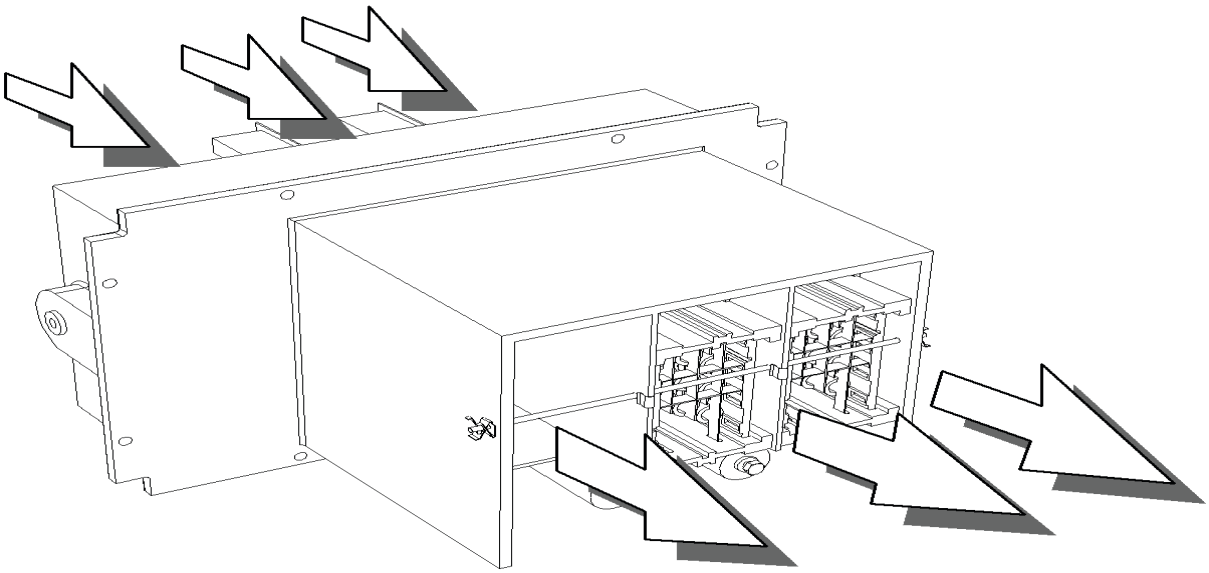

Figure 89 - Airflow Pattern for Drive Cooling

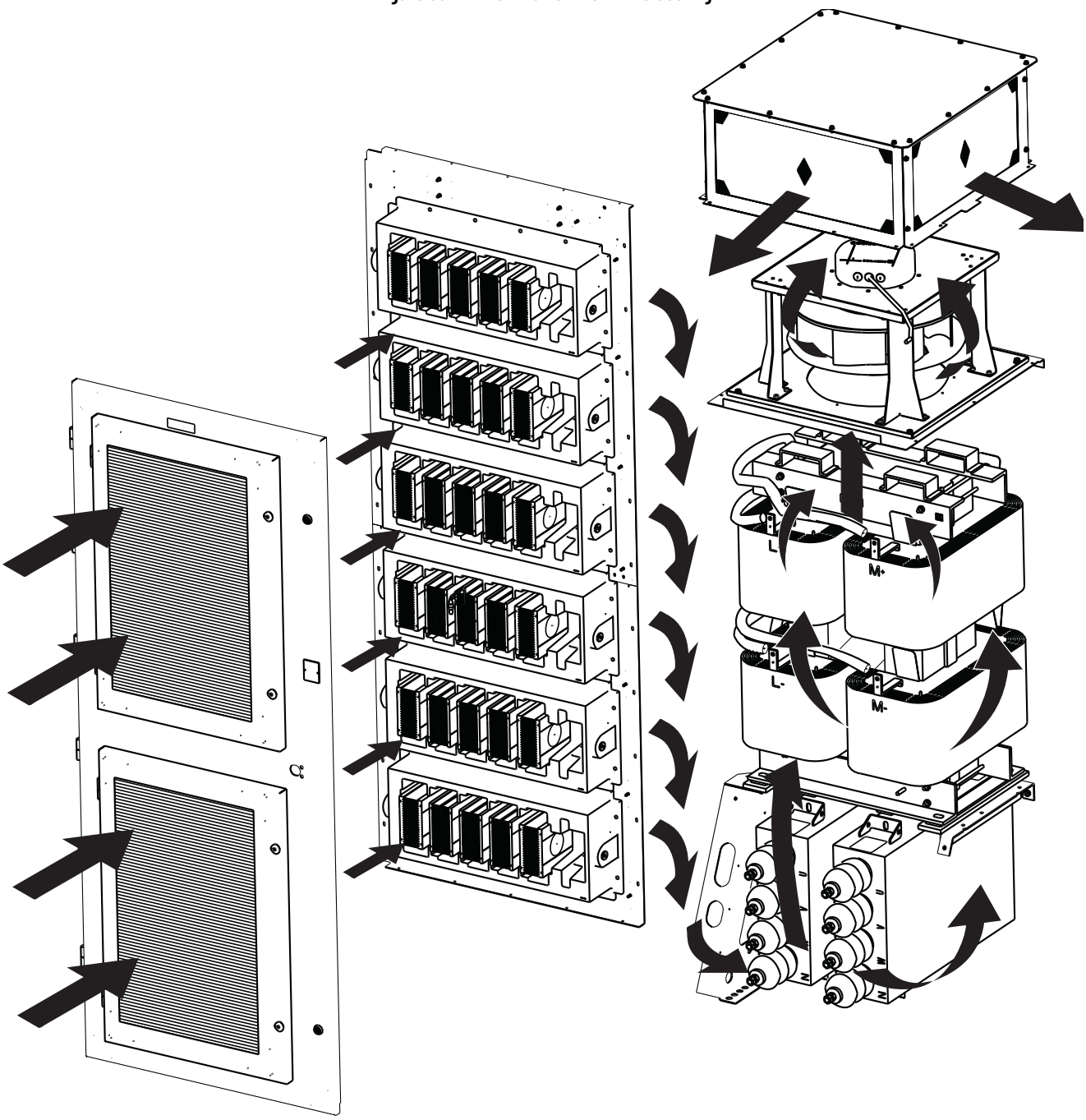

Fan Power Transformer

PowerFlex A frame medium voltage drives have an optional fan power transformer (FPT).

- For PowerFlex A frame RPDTD drives with an integral starter:
  - **If an FPT is required (customer-supplied 380...480V is not available)**: the FPT steps primary line voltage down to supply 380...480V power to the main and redundant fans. A control panel transformer (CPT) steps the same primary line voltage down the low voltage (LV) panel.
  - **If an FPT isn't required**: Customer-supplied 380...480V power directly feeds the main and redundant fans. A CPT steps this down to feed the LV panel.
- For PowerFlex A frame RPDTD drives without an integral starter, and PowerFlex A frame RPDTX drives:
  - **If an FPT is required (customer-supplied 380...480V is not available)**: the FPT steps primary line voltage down to supply 380...480V power to the main and redundant fans. Customer-supplied 110...240V is supplied directly to the LV panel.
  - **If an FPT isn't required**: Customer-supplied 380...480V power feeds directly to the main and redundant fans. Customer-supplied 110...240V is supplied directly to the LV panel through the CPT.

Figure 90 - FPT Wiring Configurations

FPT is Required:

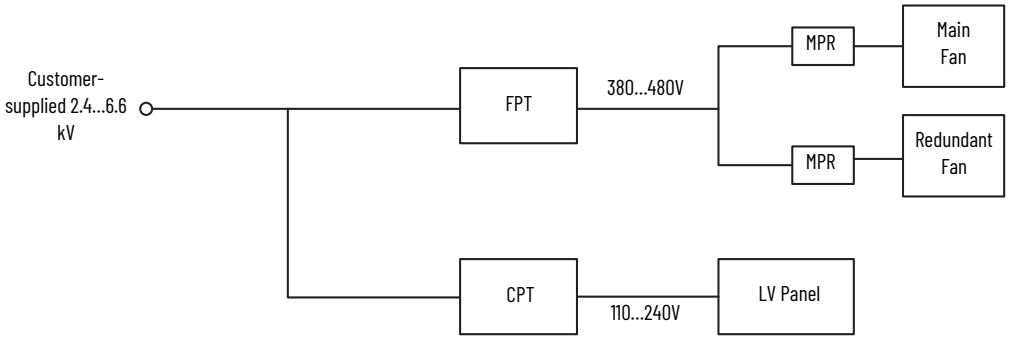

FPT is Not Required:

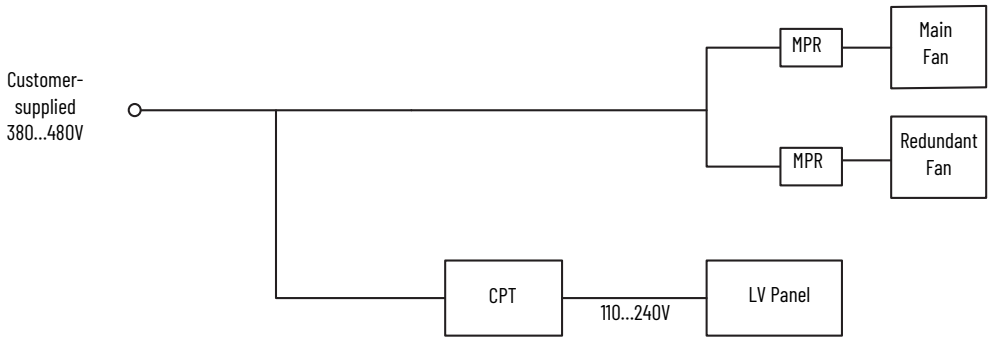

Control Component Definition and Maintenance

Control Power Components

There are two configurations in which control power is distributed for the drive. The different methods are dependent on what drive option the customer has chosen:

1. Direct-to-Drive™ (transformerless AFE rectifier) (Figure 91)
2. AFE rectifier with separate isolation transformer (Figure 92).
3. AFE rectifier with integral isolation transformer (Figure 93).

Ride-through

Standard controls with 5 cycle ride-through – The drive main control boards will remain energized for a total of 5 cycles after control power is interrupted. If control power is not restored during the 5 cycles, a controlled shutdown occurs.

Figure 91 illustrates the control power distribution for AFE drives with integral starter/line reactor.

Figure 91 - Direct-to-Drive (Transformerless AFE Rectifier)

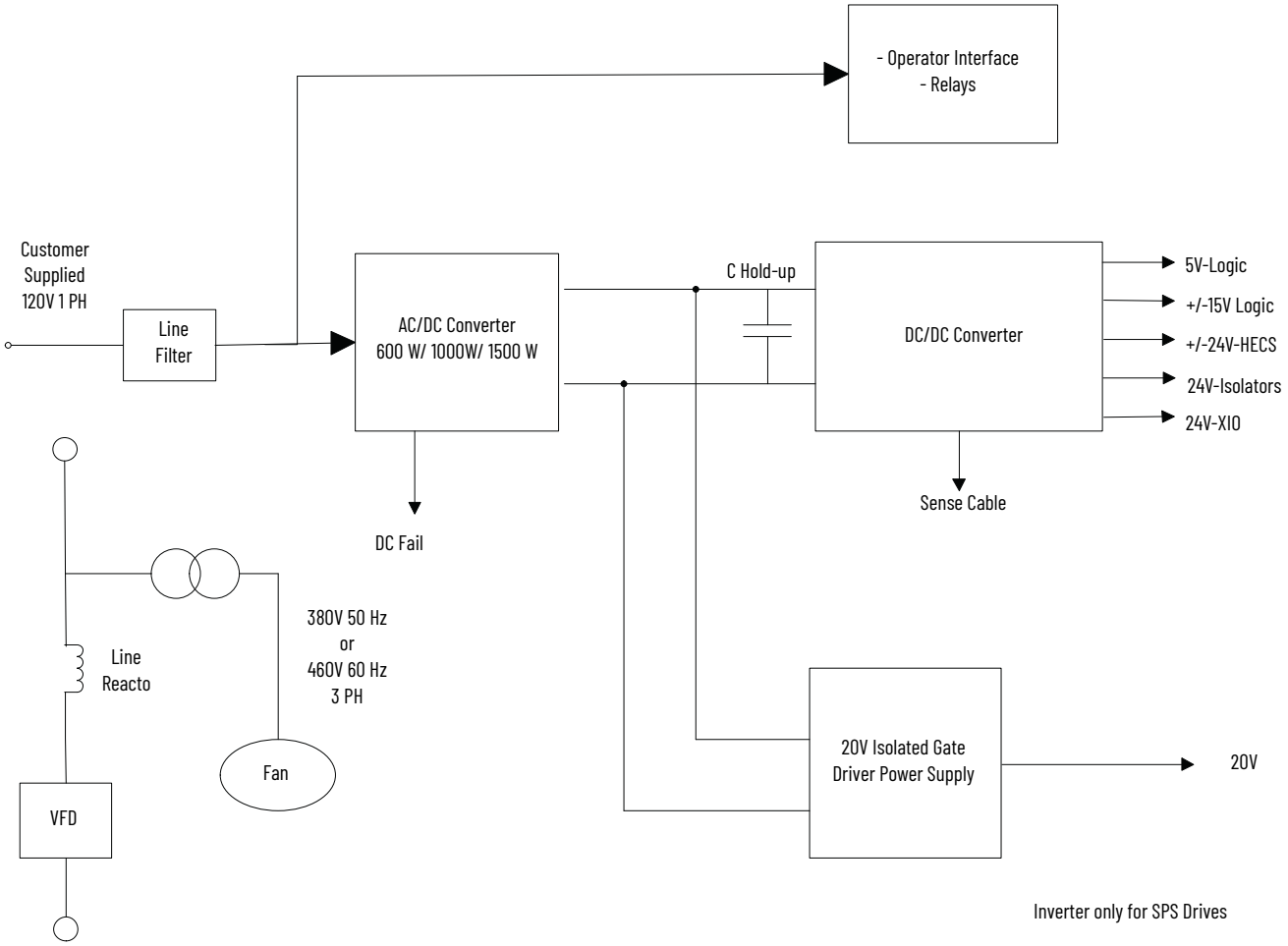

Figure 92 illustrates the control power distribution for AFE drives with remote transformer/starter (A) or integrated line reactor with remote starter (B).

Figure 92 - AFE Rectifier with Separate Isolation Transformer

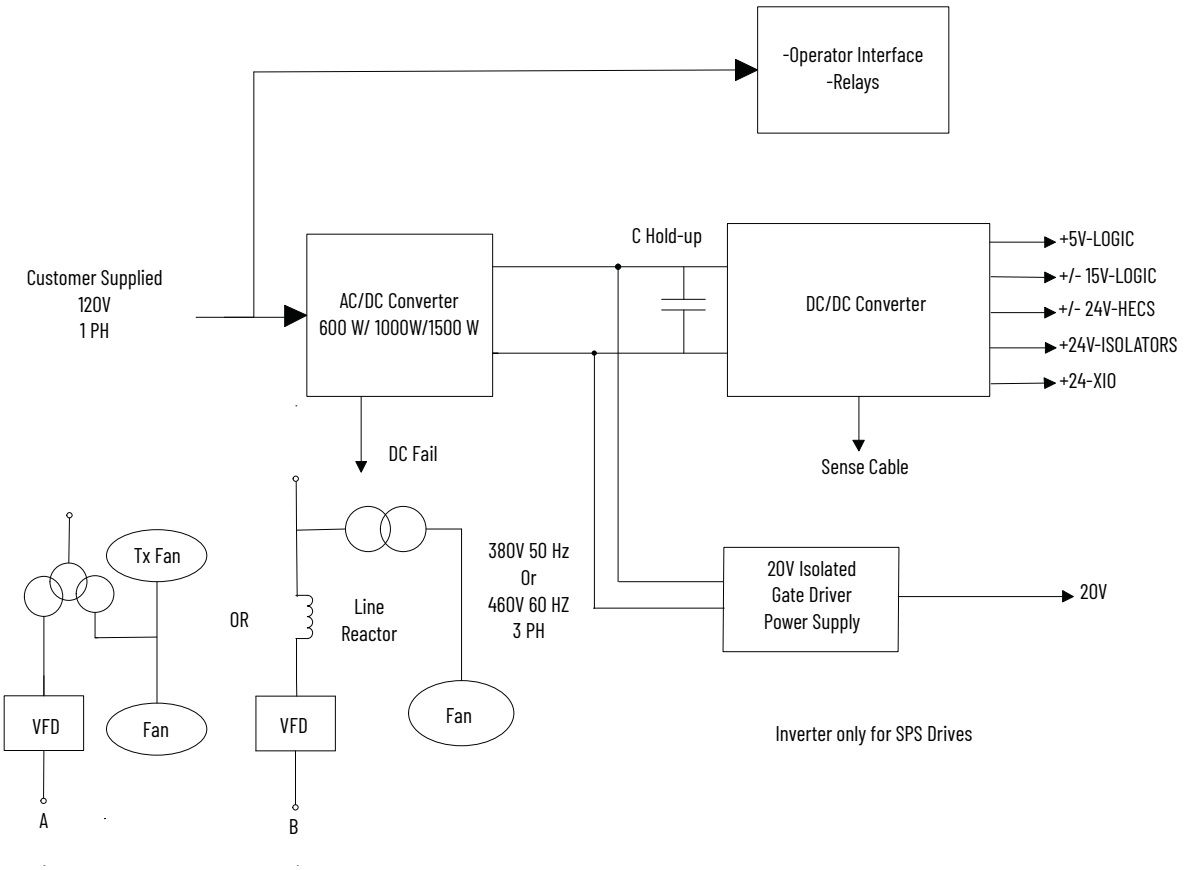

Figure 93 illustrates the control power distribution for AFE drives with integral transformer and remote starter.

Figure 93 - AFE Rectifier with Integral Isolation Transformer

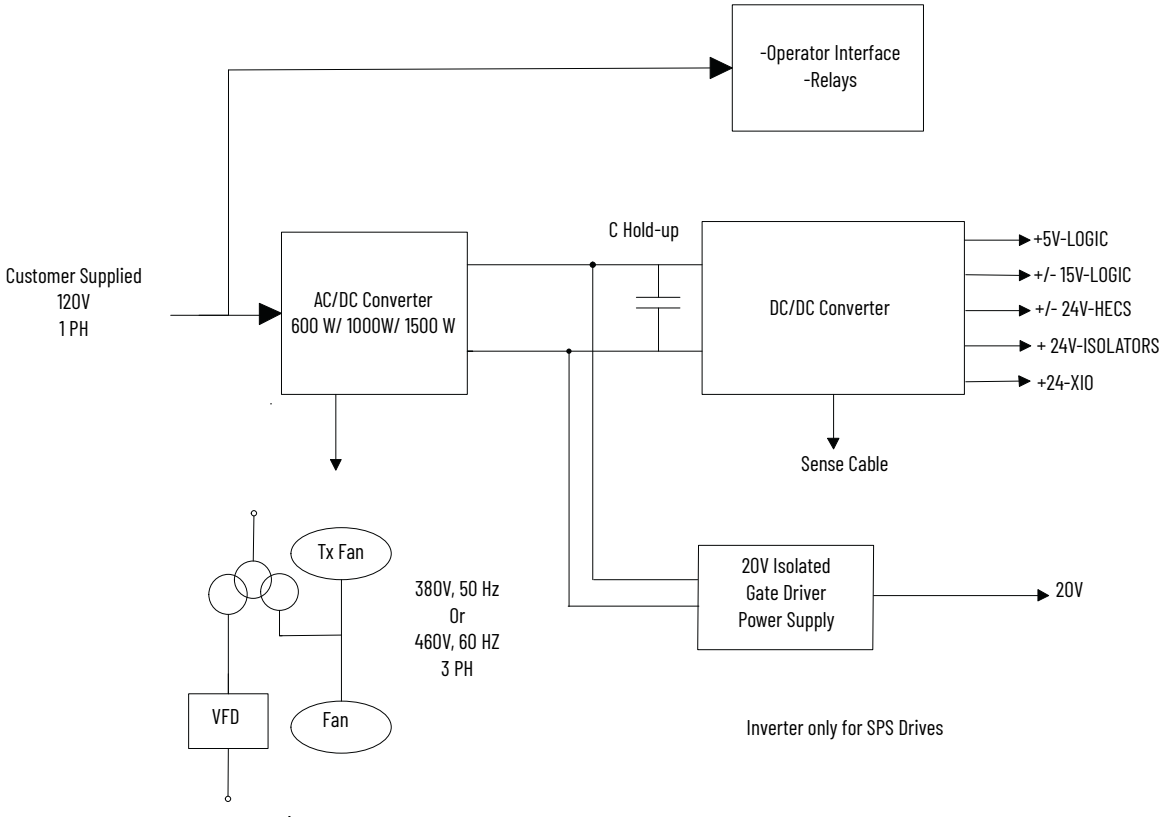

AC/DC Power Supply

The load demands on the AC/DC converters are the DC/DC converter and up to six IGDPS modules (up to three IGDPS modules for SPS drives). The DC/DC is a fixed load; however, the quantity of IGDPS modules vary depending upon the drive configuration and whether SPS modules are used.

Description

The AC/DC power supply accepts single phase voltage and produces a regulated output[(a)] for the DC/DC power supply and the HV IGDPS modules that power the SGCTs. The input and output voltages are monitored and fail signals are announced when either voltage goes below a preset level.

Figure 94 - AC/DC Converter Power Supply

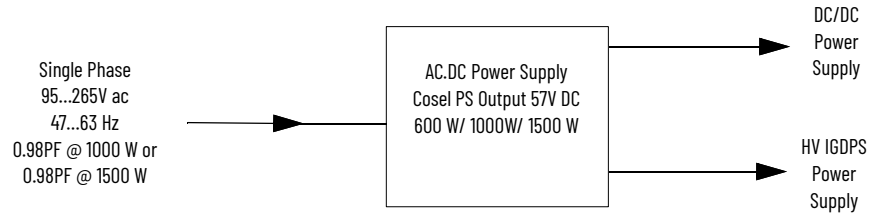

DC FAIL: Upon loss of DC output (V outputs ≤ 49V DC) this output goes from low to high.

(a) Cosel power supply output 57V DC, Pioneer power supply output is 56V DC.

Location

The AC/DC power supply is located in the low voltage panel at the top right-hand section of the drive, see Figure 95.

Figure 95 - Location of AC/DC Cosel (single) Power Supply on Low Voltage Panel

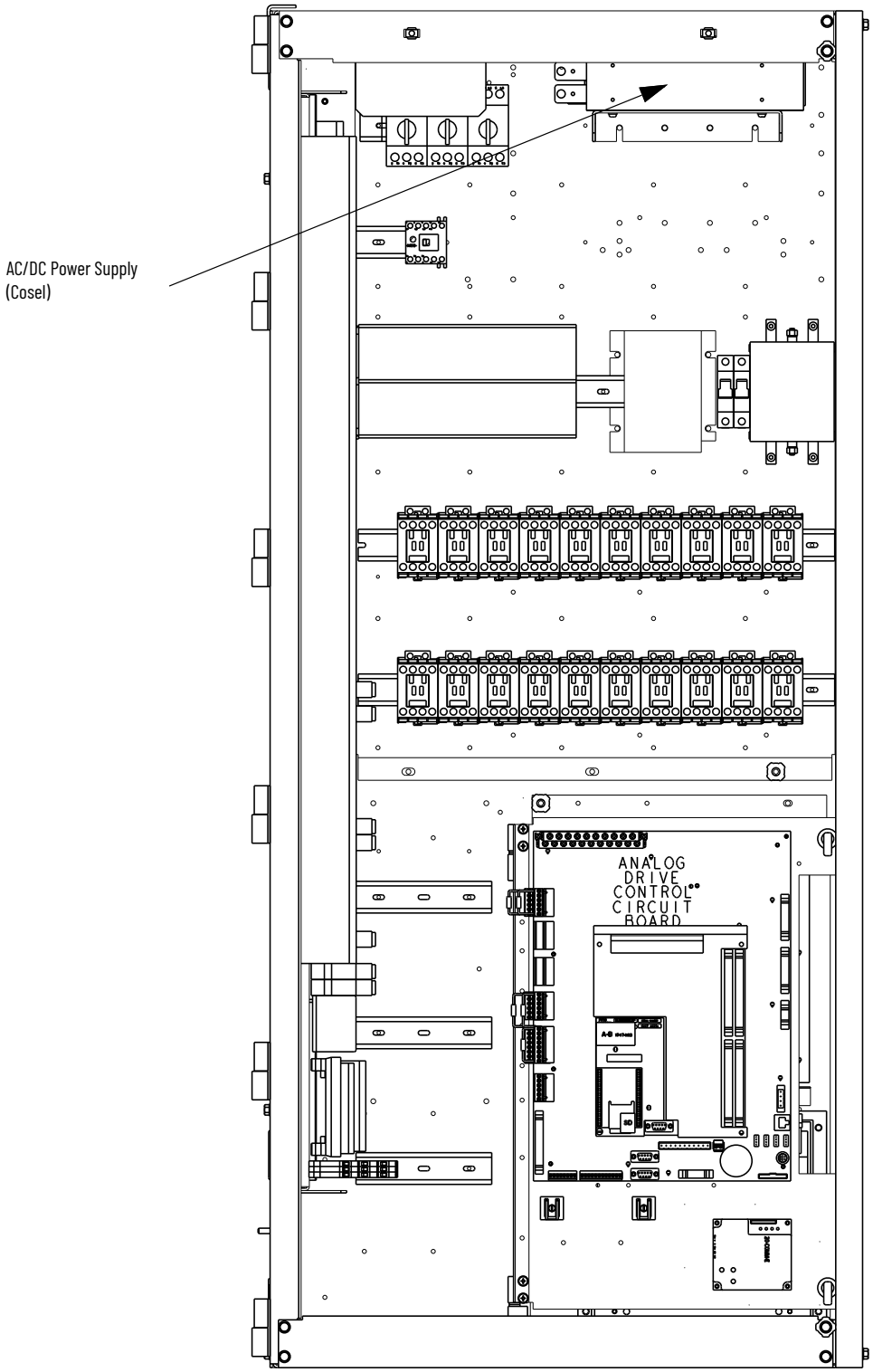

Figure 96 - Location of AC/DC Cosel (Dual) Power Supply on Low Voltage Panel

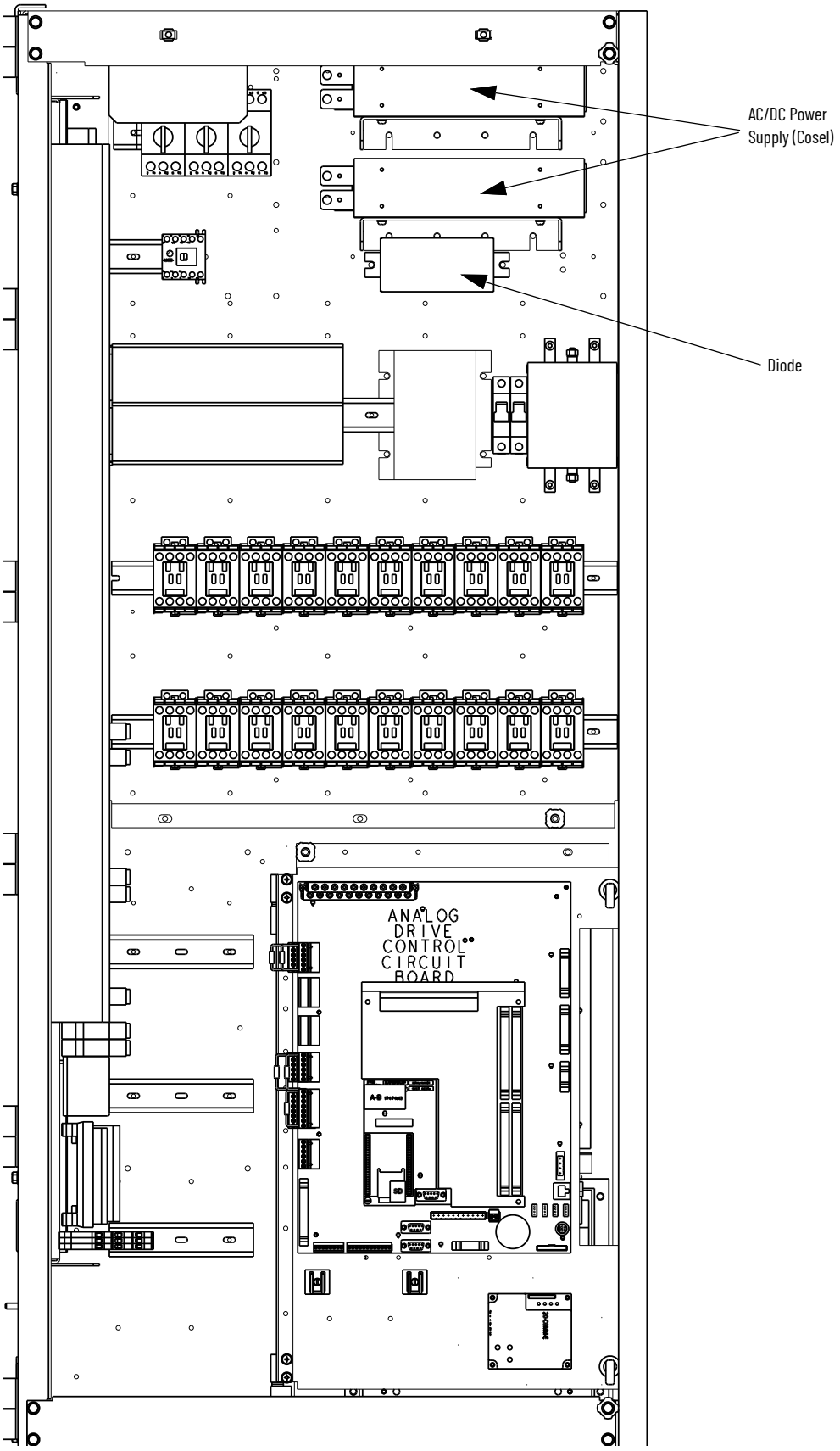

Terminal / Connections Descriptions

The terminal connections are shown in Figure 97.

Figure 97 - Terminal locations on 1000W AC/DC Power Supply (Cosel)

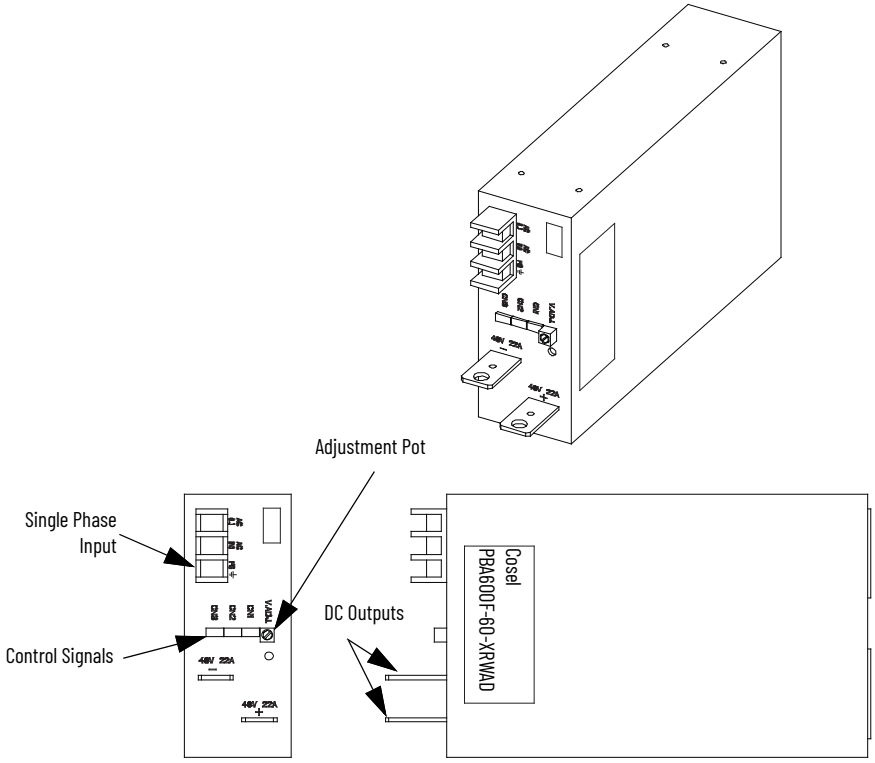

Figure 98 - Terminal Locations on 600 W AC/DC Power Supply (Cosel)

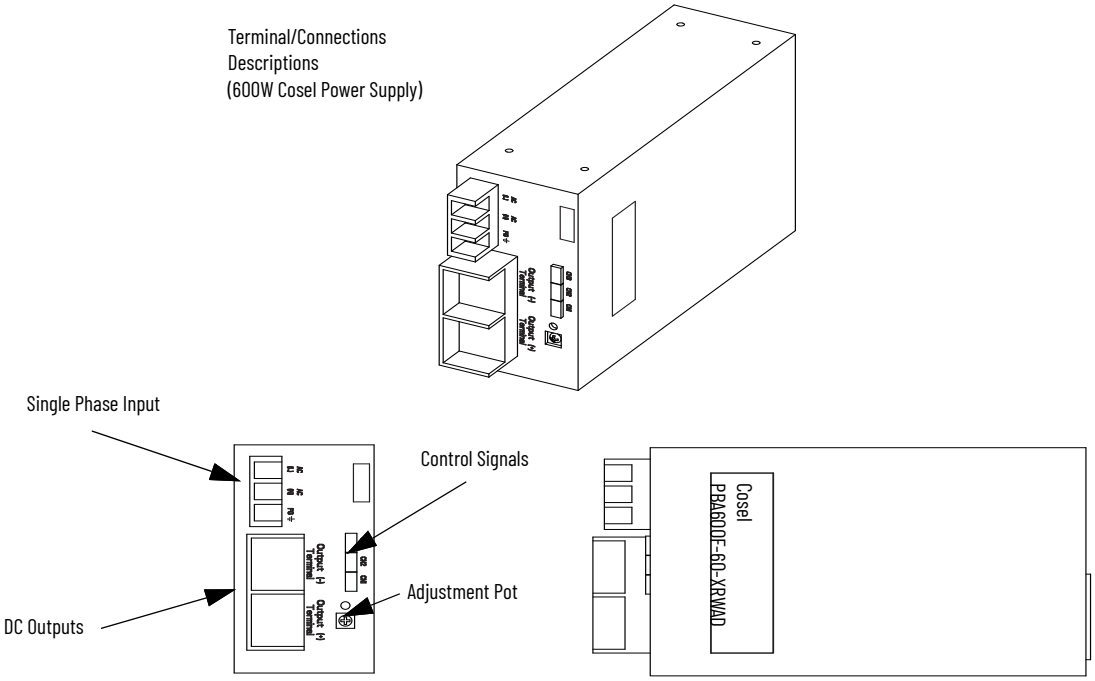

	PIN#	LABEL
P1-AC Input	AC (L)	Live
	AC (N)	Neutral
	NC	No Connection
	FG	Earth
P2-DC Output	**PIN#**	**LABEL**
	+	+57V
	–	+57V COMM
P3-Fail Output	**PIN#**	**LABEL**
	CN1	1-2 Connected 3-4 Connected 5, 6, 7, 8, 9, 10 N/C
	CN2	N/C
	CN3	7 - Alarm 8 - Alarm GND

Output Calibration

Verify that the output of the supply is 56V DC[(a)].

There is a potentiometer on the top of the power supply that adjusts the 56V DC[(a)] output for the power supply. Isolate the output of the power supplies; multiple supplies in parallel affect your measurements. With the control power on and the output of the AC/DC Converter that is isolated from the drive control, adjust the potentiometer until the output equals 56V DC[(a)]. Perform this test on each power supply. When all adjustments are complete, reconnect the power supply to the circuit and remeasure the output. Readjust if necessary.

If 56V DC[(a)] cannot be maintained, the power supply can be faulty. In multiple power supply configurations, the final output voltage after the diodes can be in the range of 56...57V DC.

Single Power Supply Replacement

The single power supply (see Figure 95 on page 113) is replaced using the following procedure. Retain all hardware for re-installation.

1. Verify that control power has been isolated and locked out.
2. Disconnect the terminals at the unit.
3. Remove the four M6 bolts from the bracket holding the power supply.

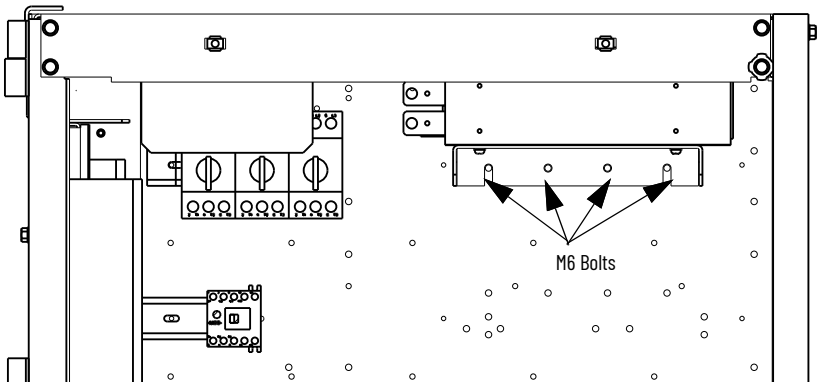

4. Extract the power supply complete with bracket from the drive.

(a) 56V DC for Cosel model numbers -XRWAC and earlier. 57V DC for Cosel model numbers -XRWAD and newer.

5. Remove the brackets from the failed power supply (four M4 screws and nylon shoulder washers).

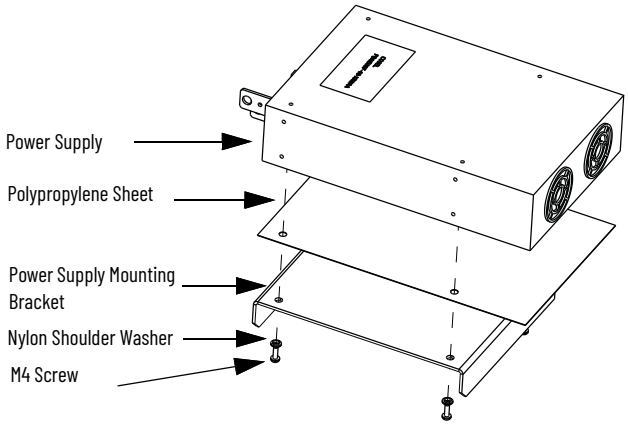

6. Attach the bracket to the replacement power supply. The black polypropylene sheet must be between the AC/DC power supply and the mounting plate of the bracket.
7. Repeat steps 6...1 in this order to replace the unit.
8. Reapply control power and verify voltage levels.

Dual Power Supply Replacement

If there are two power supplies (see Figure 96 on page 114) follow these steps to replace one or both of the power supply units. Retain all hardware for re-installation.

1. Verify that control power has been isolated and locked out.
2. Disconnect the terminals at the unit.
3. Remove the M6 screws from the diode safety cover.

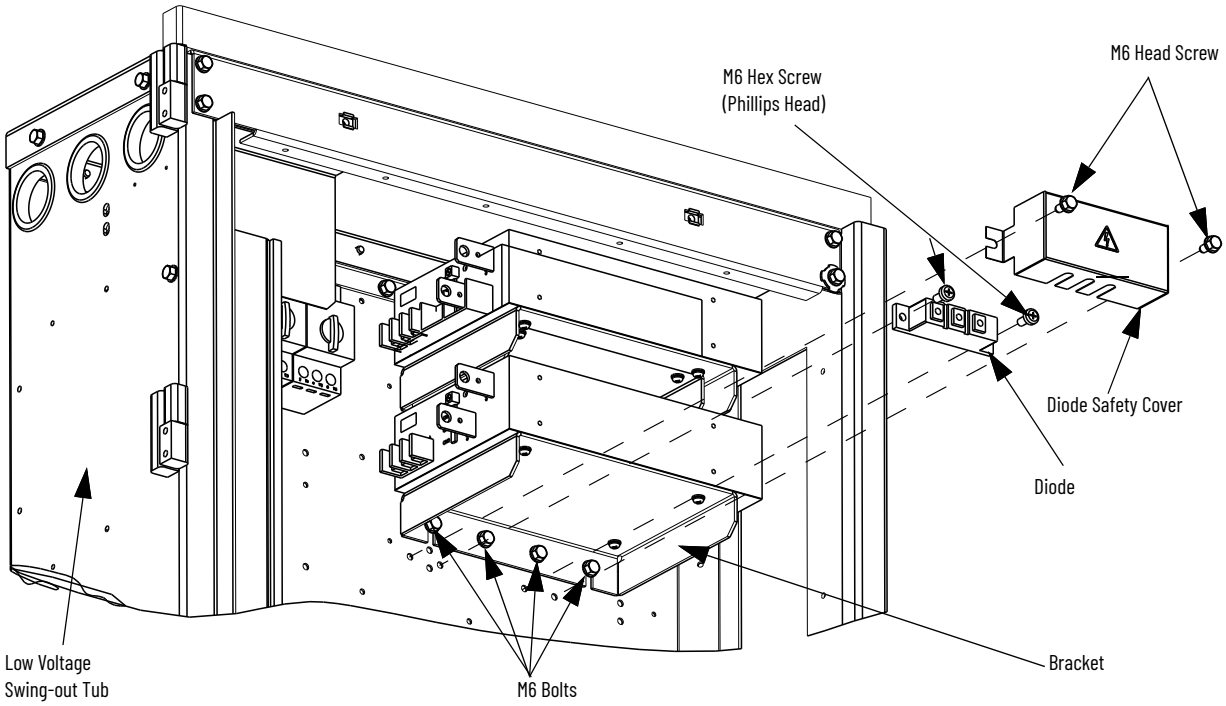

4. Remove the diode cover from the diode.
5. Remove the M6 Hex screws from diode.
6. Remove the diode from the panel.

7. Remove the four M6 bolts from the bracket holding the power supply.

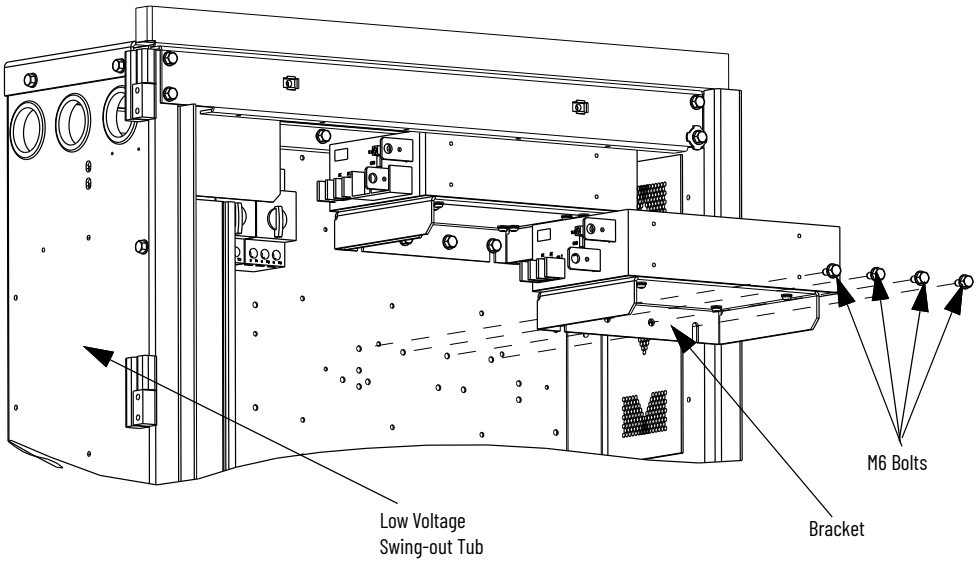

8. Extract the power supply complete with bracket from the drive.
9. Remove the brackets from the failed power supply (four M4 screws and nylon shoulder washers).

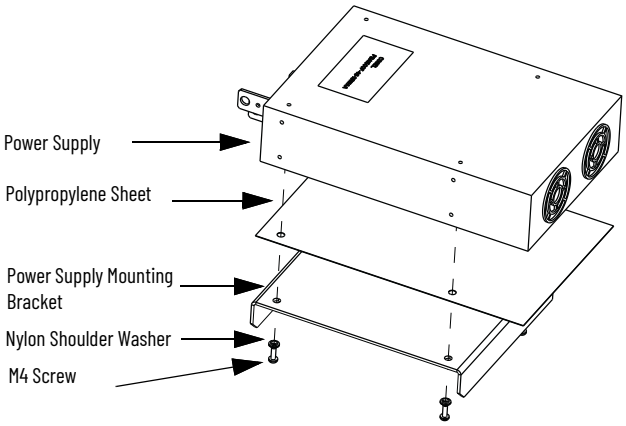

10. Attach the bracket to the replacement power supply. The black polypropylene sheet must be between the AC/DC power supply and the mounting plate of the bracket.
11. Clean the diode contact area and apply thermal grease to the area.
12. Repeat Steps 10...1 in this order to replace the unit.
13. Reapply control power and verify voltage levels.

Diode Replacement

To replace of diode follow these instructions.

1. Verify that control power has been isolated and locked out.
2. Disconnect the terminals at the unit.
3. Remove the M6 screws from the diode safety cover.
4. Remove the diode cover from the diode.
5. Remove the M6 Hex screws from diode.
6. Remove the diode from the panel.
7. Clean the diode contact area and apply thermal grease to the area.
8. Reinstall the unit following the steps 6...1 in reverse.

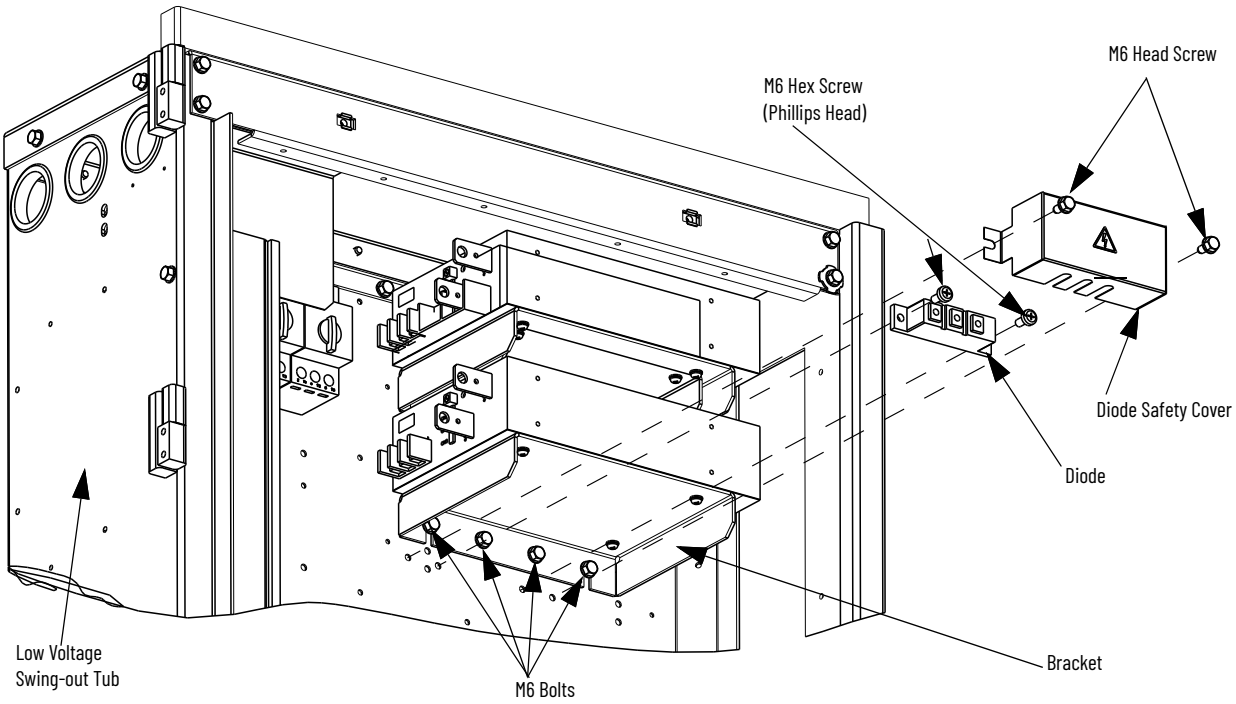

UPS Option

The PowerFlex™ 7000 “A” Frame drive has the option for internal and external UPS power. This keeps the control power active within the drive in the event of a control power loss. The following diagram shows the current configuration of the internal UPS option.

Figure 99 - 300 W AC/DC Power Supply

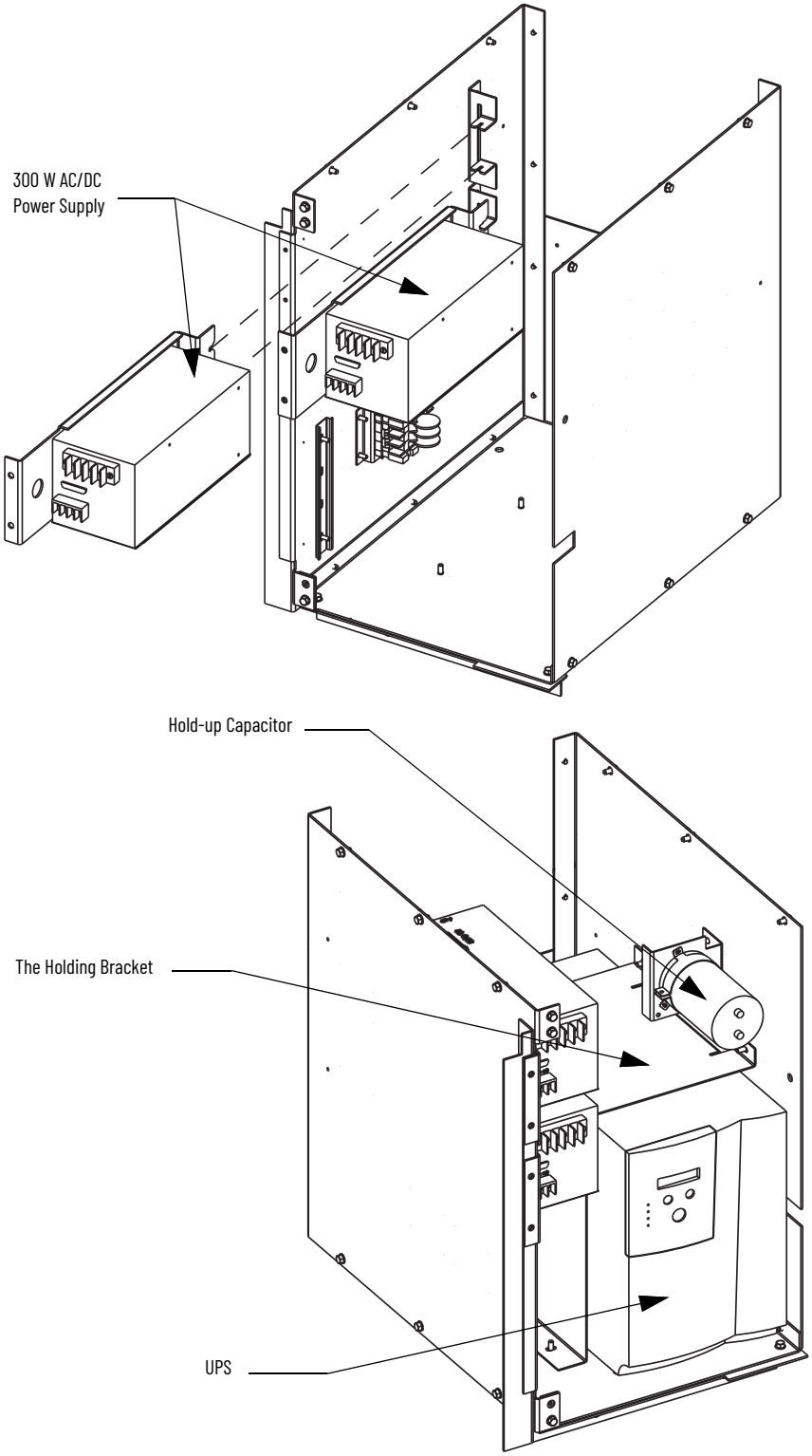

The UPS is installed in the incoming cabling section in the UPS LV control section.

The UPS maintains control power to all critical 120V AC loads and an extra AC/DC power supply that feeds the DC/DC power supply for powering all drive control components. The main drive cooling fan is not powered from this UPS.

The UPS uses the AS400 communication protocol, and feeds several status signals back to the ACB to control responses to various conditions. These conditions include low batteries, loss of input power, UPS Okay, and UPS on bypass.

If the customer has an external UPS, the firmware does not expect any of the signals that are mentioned in the previous section. No information that is related to the UPS status is displayed. The firmware operates in the same manner regarding the operation of the drive with an internal or external UPS.

The output of the UPS feeds a 300 W AC/DC power supply. This supply is 20% of the standard AC/DC power supply that is used in the drive. The load that is represented by the DC/DC power supply is much smaller than the load of the IGDPS boards, and the size is reduced accordingly. The standard AC/DC power supply is used to feed the IGDPS boards. The 300 W AC/DC power supply has an AC input that is monitored by the UPS, and the DC output that is monitored by the ACB board for fault conditions.

A hold-up capacitor on the output of the 300 W AC/DC power supply maintains the 56V DC[(a)] if there is a failure of the power supply.

Replacing the UPS

IMPORTANT To replace the UPS battery, refer to the UPS user manual that was shipped with the drive.

1. Isolate and lockout the control power.
2. Remove the hardware that fastens the holding bracket to the cabinet assembly and remove the holding bracket.
3. Disconnect the input and output wiring that is connected to and from the UPS.
4. Disconnect the 15-pin status plug and remove the UPS.

ATTENTION: Before installing the new UPS, check the battery recharge date on the shipping carton label. If the date has passed and the batteries were never recharged, do not use the UPS. Contact Rockwell Automation.

5. Before installing the new UPS, the internal battery must be connected.[(b)]
   a. Remove the UPS front cover. Push down on the top of the cover and pull the cover towards you to unclip the cover from the cabinet.
   b. Connect the white connectors together, connecting red to red, and black to black. Verify that there is a proper connection.
   c. Remove and retain the two screws from the screw mounts.
   d. Place the battery connector between the screw mounts. Reinstall the two screws that hold the connector in place.
   e. Replace the UPS front cover.

(a) 56V DC for Cosel model numbers -XRWAC and earlier. 57V DC for Cosel model numbers -XRWAD and newer.
(b) Reprinted from 700-3000 VA User's Guide by permission of Eaton Corporation.

Figure 100 - Connect the Internal UPS Battery

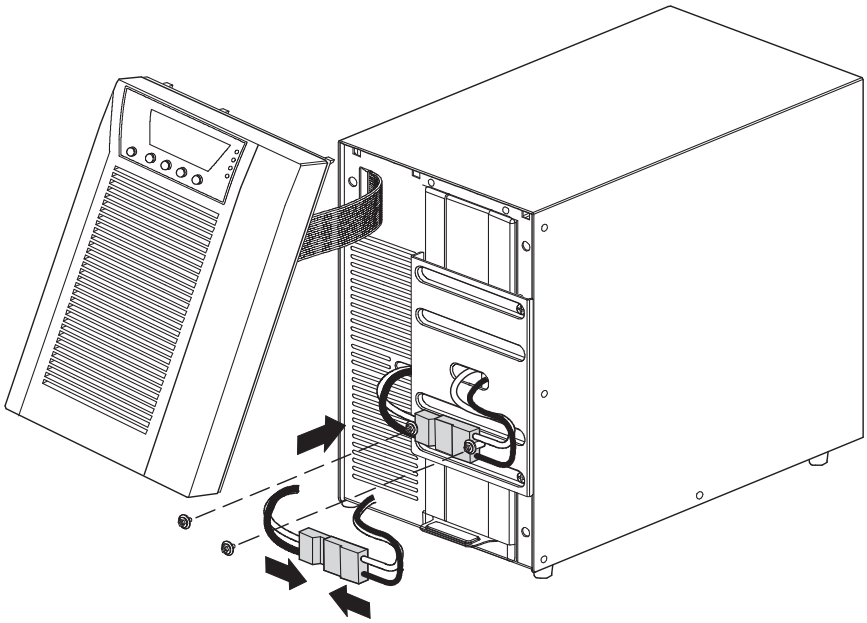

6. Reconnect all connections that are removed in the previous steps.
7. Before reconnecting the mounting bracket, apply control power to the unit and verify that the UPS is configured for the AS400 communication protocol. See the manual that comes with the UPS for instructions.
8. When the configuration has been confirmed, install the mounting bracket.

Low Voltage Control Section

The low voltage control section houses all control circuit boards, relays, Operator Interface Terminal, DC/DC power supply, and most other low voltage control components.

Figure 101 - Low Voltage Tub Compartment (Cosel Power Supply)

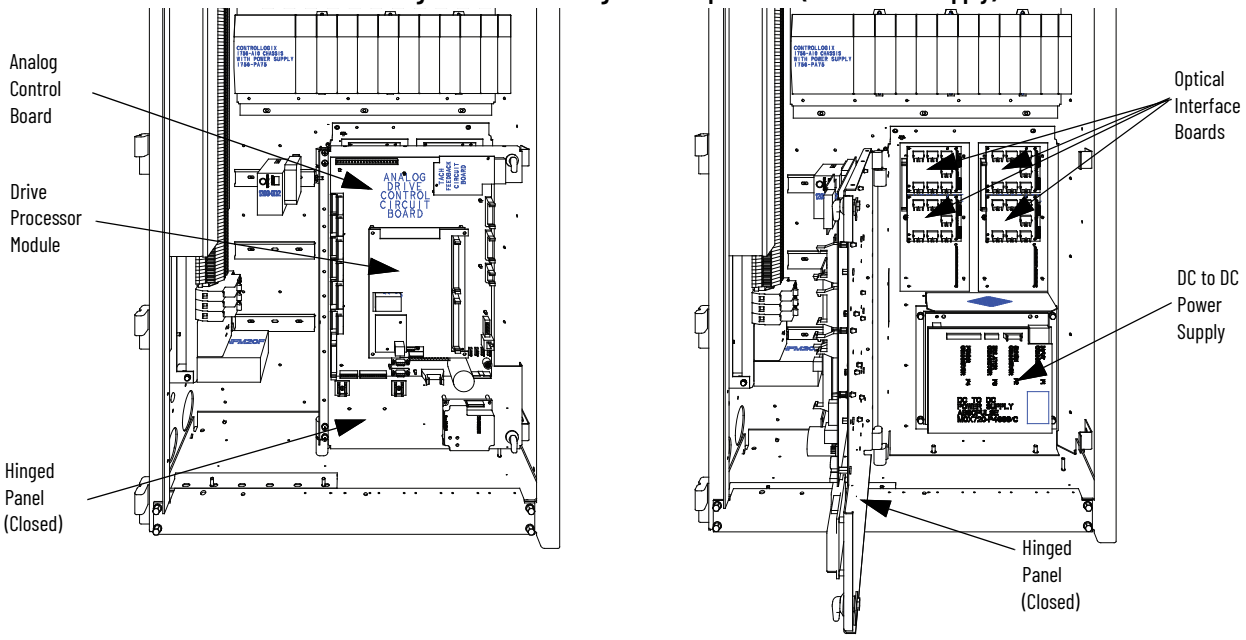

DC/DC Power Supply

Description

The DC/DC power supply is used as a source of regulated DC voltages for various logic control boards and circuits. The input to this power supply is from a regulated 56V DC[(a)] source.

Figure 102 - DC/DC Converter Power Supply

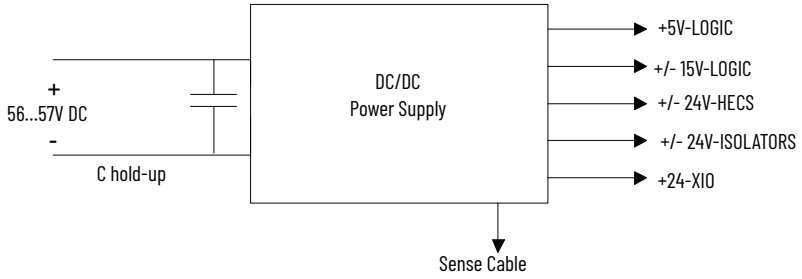

The capacitor at the input terminals enables the equipment to ride through power dips. If the capacitor (C hold-up) loses the 56V[(b)] input, it maintains the voltage level for a period of time to enable a controlled shut-down. This component is not required in all configurations.

Due to the critical nature of the ACB/DPM Logic power source, the DC/DC power supply provides redundancy for the 5V rail. There are two separate 5V outputs, each capable of powering the logic boards. In the event of one failing, the drive switches to the other power supply automatically to provide the output power.

Terminal/Connections Descriptions

P1 – DC Input	PIN NO.	LABEL	DESCRIPTION ONLY
	1	+56V	+56V input
	2	+56V COMM	+56V common
	3	EARTH	Earth ground

P2 – SENSE (To ACB)	PIN NO.	LABEL	DESCRIPTION ONLY
	1	+56V	+56V input supply
	2	+56V RTN	+56V input supply return
	3	NC	Not Connected
	4	NC	Not Connected
	5	+24V	Isolated +24V Supply
	6	+24V RTN	Isolated +24V Supply return
	7	NC	Not Connected
	8	NC	Not Connected
	9	+5VA	Primary +5V supply, before OR'ing diode
	10	DGND (com1)	+5V, +/-15V Common
	11	+5VB	Secondary +5V supply, before OR'ing diode
	12	DGND (com1)	+5V, +/-15V Common
	13	ID0	Power Supply ID Pin 0
	14	ID1	Power Supply ID Pin 1

(a) 56V DC for Cosel model numbers -XRWAC and earlier. 57V DC for Cosel model numbers -XRWAD and newer.
(b) 56V DC for Cosel model numbers -XRWAC and earlier. 57V DC for Cosel model numbers -XRWAD and newer.

P3 - ISOLATOR (To Isolator Modules)	PIN NO.	LABEL	DESCRIPTION ONLY
	1	ISOLATOR (+24V, 1 A)	+24V, 1A/com4
	2	ISOL_COMM (com4)	0V/com4
	3	EARTH	EARTH

P4 - PWR (To ACB)	PIN NO.	LABEL	DESCRIPTION ONLY
	1	+24V_XIO (+24V, 2 A)	+24V, 2 A/com3
	2	XIO_COMM (com3)	0V/com3
	3	+HECSPWR (+24V, 1 A)	+24V, 1 A/com2
	4	LCOMM (com2)	0V/com2
	5	-HECSPWR (-24V,1 A)	-24V, 1 A/com2
	6	+15V_PWR (+15V,1 A)	+15V, 1 A/com1
	7	ACOMM (com1)	0V/com1
	8	-15V_PWR (-15V,1 A)	-15V, 1 A/com1
	9	+5V_PWR (+5V,5 A)	+5V, 10 A/com1
	10	DGND (com1)	0V/com1
	11	EARTH	Earth ground

Replacement Procedure for DC/DC Power Supply

1. With the drive energized, check that all output voltages are present (View 1, Figure 103).
2. De-energize the drive, isolate, and lockout the control power, and remove all wire connections from the unit (View 1, Figure 103).
3. Remove quantity of four M6 (H.H.T.R.S.) that allows the DC/DC Power Supply Assembly to be removed from the low voltage panel. (View 1, Figure 103).
4. Remove quantity of four M4 (P.H.M.S.) and nylon shoulder washers from the back of the mounting plate (View 2, Figure 103).
5. Replace old DC/DC Power Supply with the new one.

   Verify that the black insulation is between the DC/DC power supply and the mounting plate. Repeat steps 4...1 in this order to replace unit (View 2, Figure 103).
6. Verify that the ground wire of P4 plug is connected to the ground by M10 bolt.

Figure 103 - Replacement of DC/DC power supply

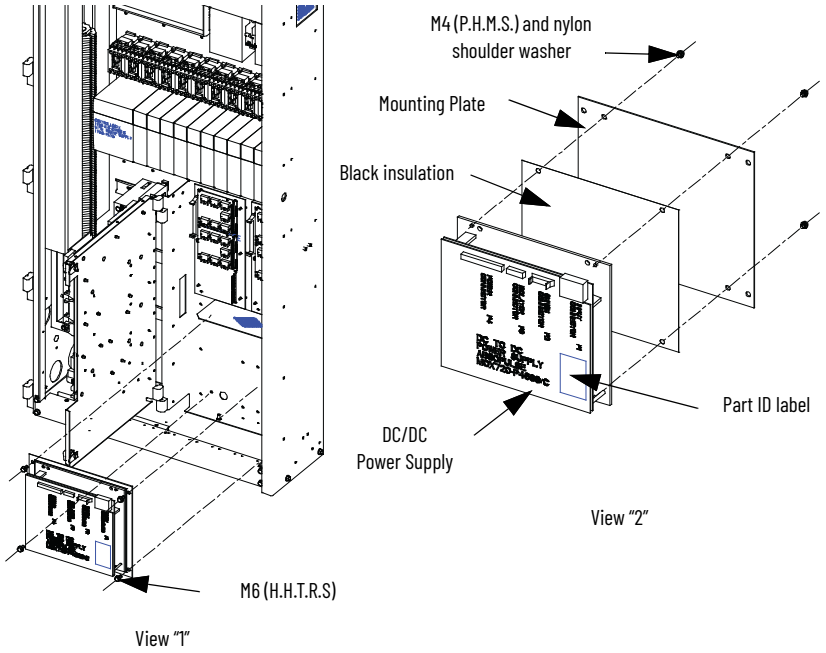

Printed Circuit Board Replacement

The replacement of printed circuit boards must be handled in a careful manner.

IMPORTANT	Remove all power to the drive. Do not remove the replacement board from the anti-static bag until necessary. Use anti-static wriststrap, which is grounded in the Low Voltage Control Section.

There are no direct screw/terminal connections on any of the low voltage circuit boards. All wire/terminal connections are made with plugs that plug into the circuit boards. Changing boards only requires the removal of the plugs, which minimizes the chance of mistakes when reconnecting the wiring.

Drive Processor Module

This board contains the control processors responsible for all drive control processing and stores all parameters that are used for the drive control.

Figure 104 - Drive Processor Module (DPM)

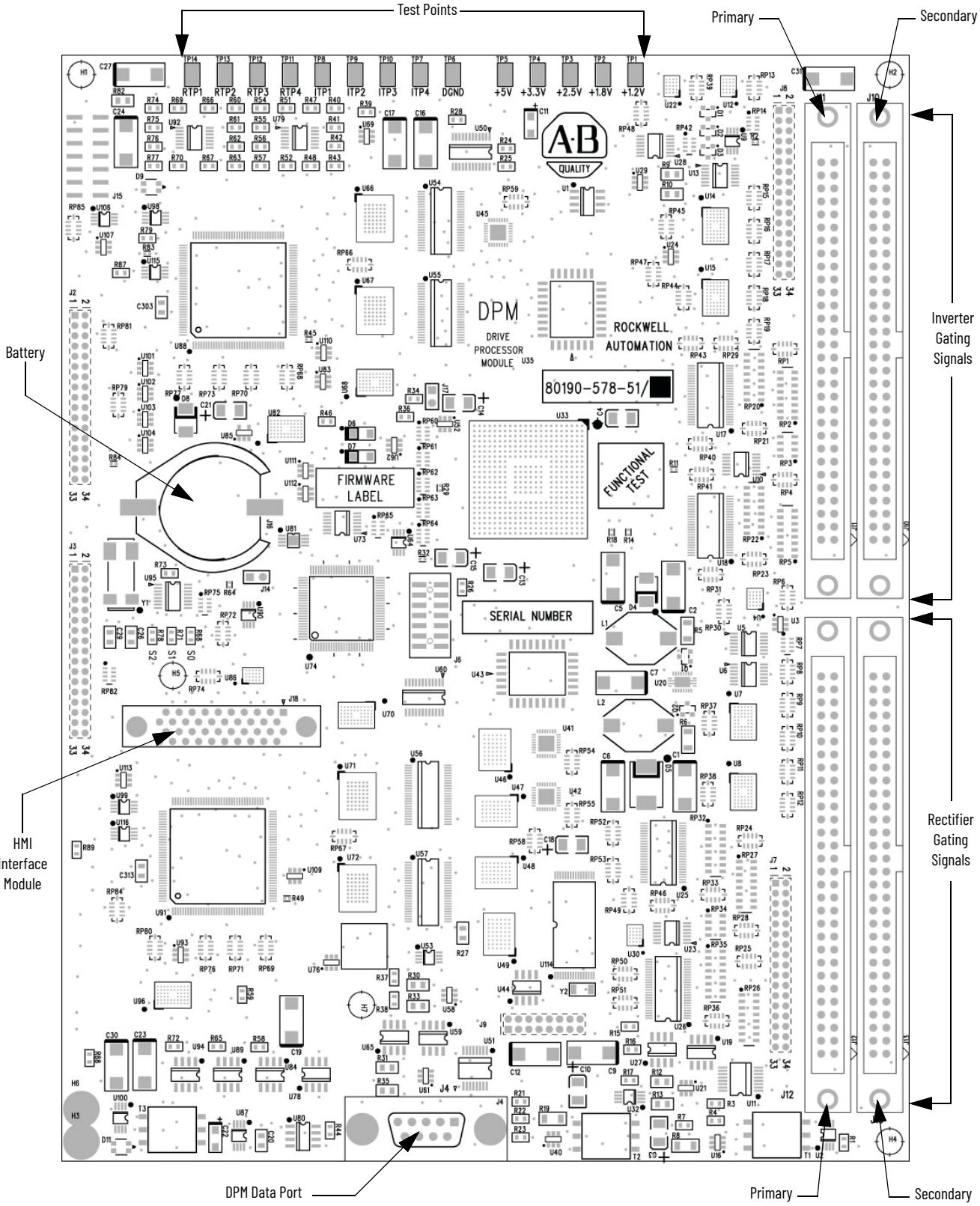

Diagnostic test points on the DPM have a voltage output range of -5...+5V. The following is the list of test points on the DPM:

Table 3 - Test Points on Drive Processor Module

Test Points	Name	Description
DPM-TP1	+1.2V	+1.2V DC power supply
DPM-TP2	+1.8V	+1.8V DC power supply
DPM-TP3	+2.5V	+2.5V DC power supply
DPM-TP4	+3.3V	+3.3V DC power supply
DPM-TP5	+5V	+5V DC power supply
DPM-TP6	DGND	Digital ground
DPM-TP8	ITP1	Digital to Analog output – Assignable diagnostic test point
DPM-TP9	ITP2	Digital to Analog output – Assignable diagnostic test point
DPM-TP10	ITP3	Digital to Analog output – Assignable diagnostic test point
DPM-TP7	ITP4	Digital to Analog output – Assignable diagnostic test point
DPM-TP11	RTP4	Digital to Analog output – Assignable diagnostic test point
DPM-TP12	RTP3	Digital to Analog output – Assignable diagnostic test point
DPM-TP13	RTP2	Digital to Analog output – Assignable diagnostic test point
DPM-TP14	RTP1	Digital to Analog output – Assignable diagnostic test point

This table defines the states of status indicators D9 and D11 on the DPM board. D9 is used for the inverter side processor and D11 is for the rectifier side processor. The other two status indicators (D6 and D7) are the watchdogs for the inverter and rectifier code respectively.

Table 4 - Description of D9 and D11 Function

Color	Rate of Count (Pulse)	Meaning
Green	10 count	Pre-execution OK
Red	0.25 Hz	No bootcode
Green	0.25 Hz	No application
Green	0.5 Hz	Downloading by way of serial port
Green	2 Hz	Serial port active – (terminal)
Green	1 Hz	Waiting/loading application
Green	Solid	Operation running or successful
Red	Solid	Operation failed
Red	2 count	POST – RAM failed
Red	3 count	POST – NVRAM failed
Red	4 count	POST – DPRAM failed
Red	8 count	FPGA Loading failed
Red	9 count	POST – USART failed: 1 Green Count = Port 1 2 Green Count = Port 2
Red	10 count	End of code reached
Red	11 count	Download – CRC error
Red	14 count	Download – Overflow error

Drive Processor Module Replacement

Before replacing the drive processor module, record all programmed drive parameters and settings. Specifically, the parameters, fault masks, fault descriptions, and PLC links are critical. This information is stored in NVRAM on each, and as a result you can lose your settings with a new board.

To record parameters, use the memory on the terminal. Other options include a Flashcard, HyperTerminal, the door-mounted printer, or DriveTools™ software to record the parameters to a file.

To print all drive setup information, use the printer and HyperTerminal. In the situation where a board has failed, you probably will not be able to save parameters after the failure. In this case, contact the customer to see if they have a copy of the last parameters, or contact Product Support to check if they have a copy.

IMPORTANT Save all parameters when you are finished commissioning or servicing the drive.

1. Record all drive setup information using any of the previously mentioned options.
2. Verify that all medium voltage and control voltage power to the drive is isolated and locked out.
3. It is required to first remove the transparent sheet on top of the drive processor module by removing the four screws.
4. Use static strap before removing any connectors.
5. Remove the connectors J4, J11, and J12 after proper identification and marking if necessary. Use the electrical drawing as the reference.
6. Remove the four screws on the corners of the board fastening the board to the standoffs on the analog control board ACB.
7. Gently remove the drive processor module from the four, 34-pin female connectors and one, 16-pin female connector on the ACB.

IMPORTANT Remove the DIM module from the DPM. Plug DIM module on the new DPM before the replacement of DPM.

8. Follow steps 7...3 in this order to reinstall the boards back into the low voltage control cabinet.
9. Apply control power to the drive. The DPMs are shipped with no firmware installed, so the drive automatically goes into download mode. Install firmware in the drive following the guidelines in publication 7000-UM201A.
10. Program the drive. See publication 7000-TD002.

Figure 105 - ACB and DPM Replacement

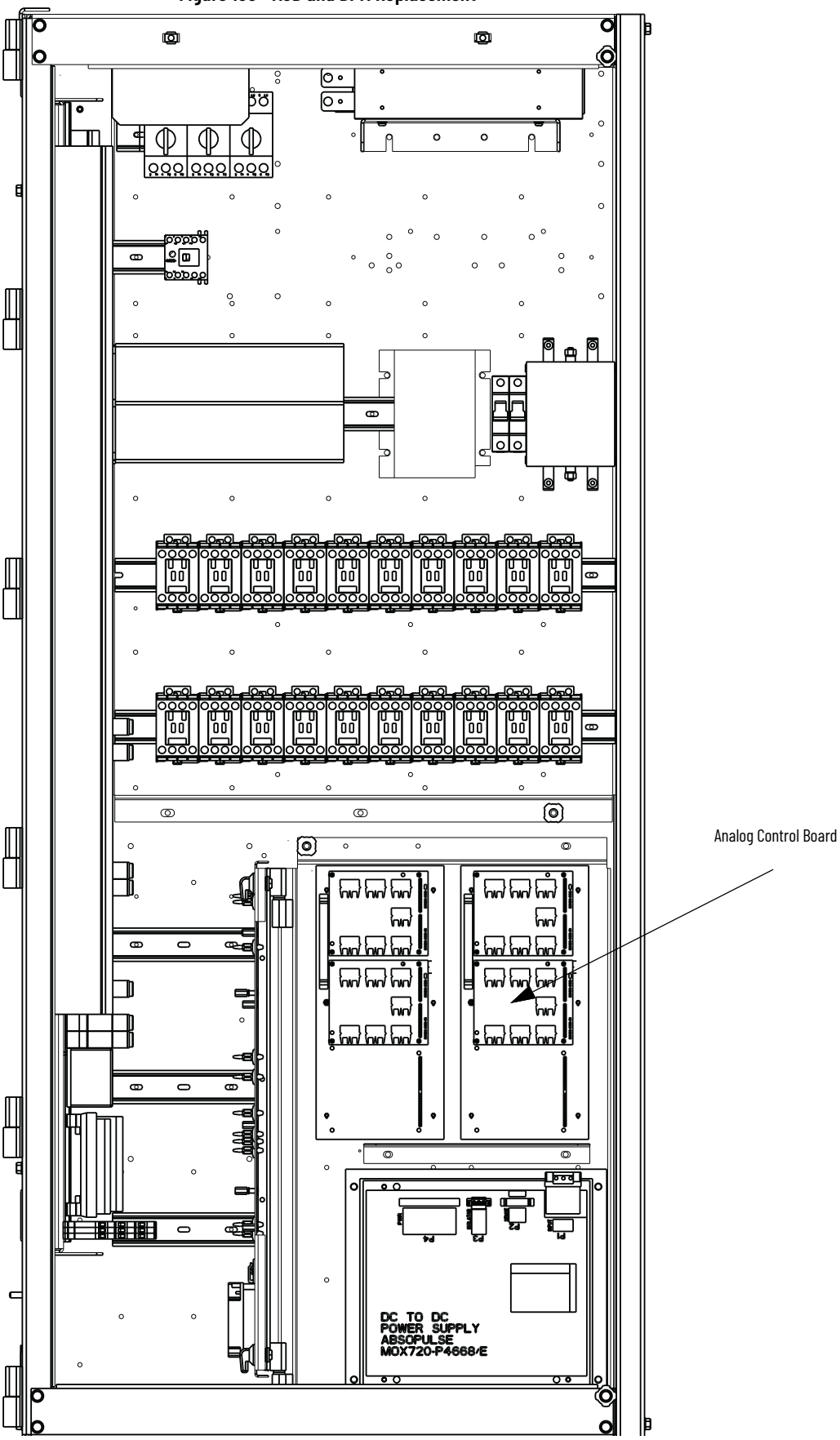

Analog Control Board

The Analog Control Board (ACB) is the hub for all control-level signals external to the drive. Analog I/O, External Fault signals (through the XIO board), SCANport/DPI communication modules, Remote I/O, terminal interface, printers, modem, and other external communication devices are routed through this board.

Figure 106 - Analog Control Board

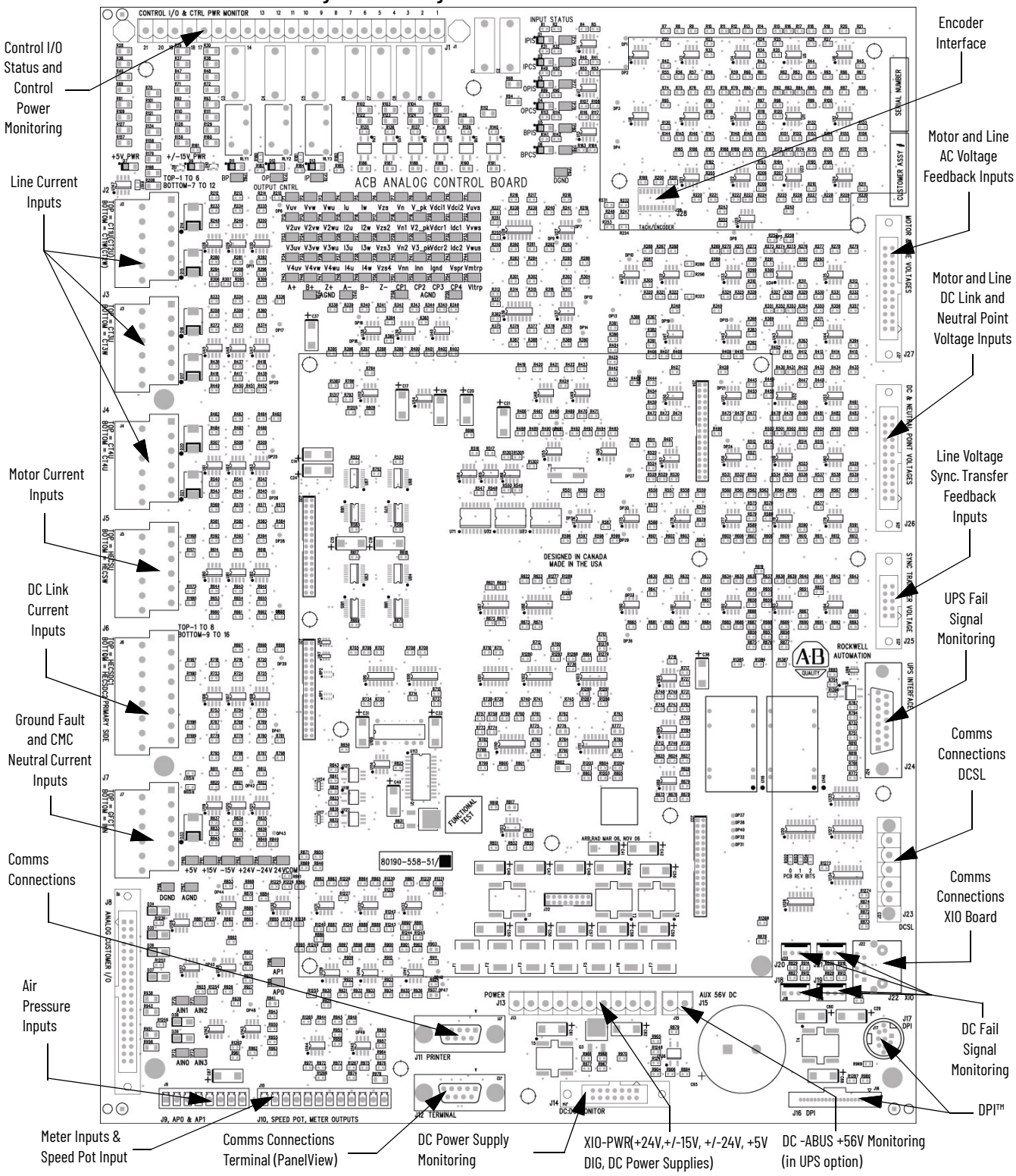

The ACB receives all Analog Signals from the internal components of the drive including the current and voltage feedback signals. The boards also have isolated Digital I/O for fan status, E-stops, and contactor control and status feedback. All test points for the currents, system voltages, control voltages, and flux are on these boards.

Table 5 - Connectors on Analog Control Board

ACB Connectors	Description
ACB-J1	Control I/O and control power monitor
ACB-J2	Line current inputs, CT2U, CT2W
ACB-J3	Line current inputs, CT3U,CT3W
ACB-J4	Line current inputs, CT4U,CT4W
ACB-J5	Motor current inputs, HECSU, HECSW
ACB-J6	DC Link current inputs, HECSDC1, HECSDC2
ACB-J7	Ground fault and CMC Neutral current inputs, GFCT, INN
ACB-J8	Isolated and non-isolated analog inputs, AIN1,AIN2,AIN3 and Non-isolated outputs, AOUT1, AOUT2, AOUT3, AOUT4
ACB-J9	Air pressure inputs, AP0, AP1
ACB-J10	Meter outputs, AOUT5, AOUT6, AOUT7, AOUT8, and Speed Pot input, AIN0
ACB-J11	Communication connections, printer outputs
ACB-J12	Communication connections, Terminal
ACB-J13	DC power supplies, XIO(+24V),+/-15V,+/-24V,+5V
ACB-J14	DC power supply monitoring, 5V1, 5V2, DC-BUS
ACB-J15	DC-ABUS +56V output monitoring (UPS option)
ACB-J16	DPI interface
ACB-J17	Communication connections, scan port
ACB-J18	DC fail signal monitoring
ACB-J19	DC fail signal monitoring
ACB-J20	DC fail signal monitoring
ACB-J21	DC fail signal monitoring
ACB-J22	Communication connection, XIO link CAN interface
ACB-J23	Communication connection, parallel drive
ACB-J24	UPS fail signal monitoring
ACB-J25	Line-voltage synchronous transfer feedback voltage inputs VSA,VSB,VSC
ACB-J26	Motor and line DC link and Neutral Point Voltage inputs
ACB-J27	AC Motor and Line-voltage feedback inputs
ACB-J28	Encoder interface
ACB-J30	DPM connection, A/D SUB system
ACB-J31	DPM connection, DACs serial data
ACB-J32	DPM power supply, +5V
ACB-J33	DPM connection, Faults & other I/O
ACB-J34	DPM connection, Encoder

Table 6 - Test Points on Analog Control Board

Test points	Name	Description
ACB-TP1	Vuv	Motor voltage feedback, UV
ACB-TP2	Vvw	Motor voltage feedback, VW
ACB-TP3	Vwu	Motor voltage feedback, WU
ACB-TP4	Iu	Motor current, HECSU
ACB-TP5	Iw	Motor current, HECSW
ACB-TP6	Vzs	Zero sequence generation motor-side, VZS
ACB-TP7	Vn	Motor side filter CAP neutral voltage, MFCN
ACB-TP8	V_pk	Motor over voltage detection for UVW
ACB-TP9	Vdci1	Motor side DCLINK voltage for bridge #1, VMDC1
ACB-TP10	Vdci2	Motor side DCLINK voltage for bridge #2, VMDC2
ACB-TP11	Vuvs	Line voltage synchronous feedback, VSAB
ACB-TP12	V2uv	Line voltage feedback, 2UV
ACB-TP13	V2vw	Line voltage feedback, 2VW
ACB-TP14	V2wu	Line voltage feedback, 2WU
ACB-TP15	I2u	Line current, CT2U
ACB-TP16	I2w	Line current, CT2W
ACB-TP17	Vzs2	Zero sequence generation line-side, VZS2
ACB-TP18	Vn1	Line filter CAP neutral voltage for bridge #1, LFCN1
ACB-TP19	V2_pk	AC over voltage detection for 2UVW
ACB-TP20	Vdcr1	Line side DCLINK voltage for bridge#1,VLDC1
ACB-TP21	Idc1	DCLINK current, HECSDC1
ACB-TP22	Vvws	Line voltage synchronous feedback, VSBC
ACB-TP23	V3uv	Line voltage feedback, 3UV
ACB-TP24	V3vw	Line voltage feedback, 3VW
ACB-TP25	V3wu	Line voltage feedback, 3WU
ACB-TP26	I3u	Line current, CT3U
ACB-TP27	I3w	Line current, CT3W
ACB-TP28	Vzs3	Zero sequence generation line side, VZS3
ACB-TP29	Vn2	Line filter CAP neutral voltage for bridge #2, LFCN2
ACB-TP30	V3_pk	AC over voltage detection for 3UVW
ACB-TP31	Vdcr2	Line side DCLINK voltage for bridge#2, VLDC2
ACB-TP32	Idc2	DCLINK current, HECSDC2
ACB-TP33	Vwus	Line voltage synchronous feedback, VSCA
ACB-TP34	V4uv	Line voltage feedback, 4UV
ACB-TP35	V4vw	Line voltage feedback, 4VW
ACB-TP36	V4wu	Line voltage feedback, 4WU
ACB-TP37	I4u	Line current, CT4U
ACB-TP38	I4w	Line current, CT4W
ACB-TP39	Vzs4	Zero sequence generation line-side, VZS4 (spare one)
ACB-TP40	Vnn	CMC neutral voltage, VNN
ACB-TP41	Inn	CMC neutral current, INN
ACB-TP42	Ignd	Ground fault current, GFCT
ACB-TP43	Vspr	Spare channel for inputs
ACB-TP44	Vmtrp	Motor over voltage detection set point
ACB-TP45	A+	Encoder A+ input
ACB-TP46	B+	Encoder B+ input
ACB-TP47	Z+	Encoder Z+ input
ACB-TP48	A-	Encoder A-input
ACB-TP49	B-	Encoder B- input
ACB-TP50	Z-	Encoder Z- input
ACB-TP51	CP1	Control power monitoring for channel 1

Table 6 - Test Points on Analog Control Board (Continued)

ACB-TP52	CP2	Control power monitoring for channel 2
ACB-TP53	CP3	Control power monitoring for channel 3
ACB-TP54	CP4	Control power monitoring for channel 4
ACB-TP55	Vltrp	AC over voltage detection set point for 2UVW and 3UVW
ACB-TP56	AGND	Analog ground
ACB-TP57	AGND	Analog ground
ACB-TP58	AGND	Analog ground
ACB-TP59	AGND	Analog ground
ACB-TP60	+5V	+5V DC power supply
ACB-TP61	+15V	+15V DC power supply
ACB-TP62	-15V	-15V DC power supply
ACB-TP63	+24V	+24V DC power supply
ACB-TP64	-24V	-24V DC power supply
ACB-TP65	24VCOM	+/- 24V common
ACB-TP66	DGND	Digital ground
ACB-TP67	AGND	Analog ground
ACB-TP68	AP1	Analog control Inputs, air pressure input, AP1
ACB-TP69	AP0	Analog control Inputs, air pressure input, AP0
ACB-TP70	AIN1	Analog control Input, AIN1
ACB-TP71	AIN2	Analog control Input, AIN2
ACB-TP72	AIN0	Analog control Input, AIN0
ACB-TP73	AIN3	Analog control Input, AIN3
ACB-TP74	IPIS	Input isolating switch
ACB-TP75	IPCS	Input contactor status
ACB-TP76	IP	Input contactor command
ACB-TP77	OPIS	Output isolating switch
ACB-TP78	OPCS	Output contactor status
ACB-TP79	OP	Output contactor command
ACB-TP80	BPIS	Bypass isolating switch
ACB-TP81	BPCS	Bypass contactor status
ACB-TP82	BP	Bypass contactor command
ACB-TP83	DGND	Digital ground return

Interface Module (IFM)

The interface module is used to make all customer useable connections to the ACB. The pin numbers that are listed on the following pages refer to IFM pin numbers.

Figure 107 - Interface Module

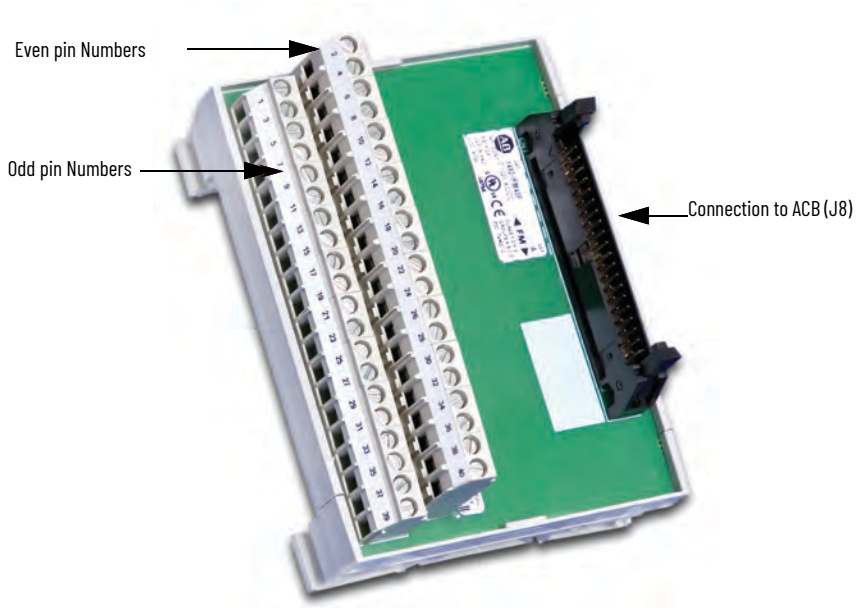

Analog Inputs and Outputs

The PowerFlex 7000 drive offers one isolated process current-loop transmitter and three isolated process current-loop receivers, which are embedded into the control. They are accessible on the ACB.

The isolated process output is configured as 4...20 mA. The three isolated process inputs are individually configurable for either a range of -10/0/+10V or 4...20 mA (Refer to Programming Manual).

The following information shows the connections for each input and output.

Current Loop Transmitter

The current loop transmitter transmits 4...20 mA output to an external receiver. The loop compliance on the transmitter is 12.5V. Loop compliance is the maximum voltage at which a transmitter can generate to achieve the maximum current and is usually a function of the power supply voltage. Therefore, the PowerFlex 7000 transmitter can drive a receiver with an input resistance up to 625 Ω. Figure 108 shows a block diagram of the transmitter.

Figure 108 - Process Loop Transmitter Block Diagram

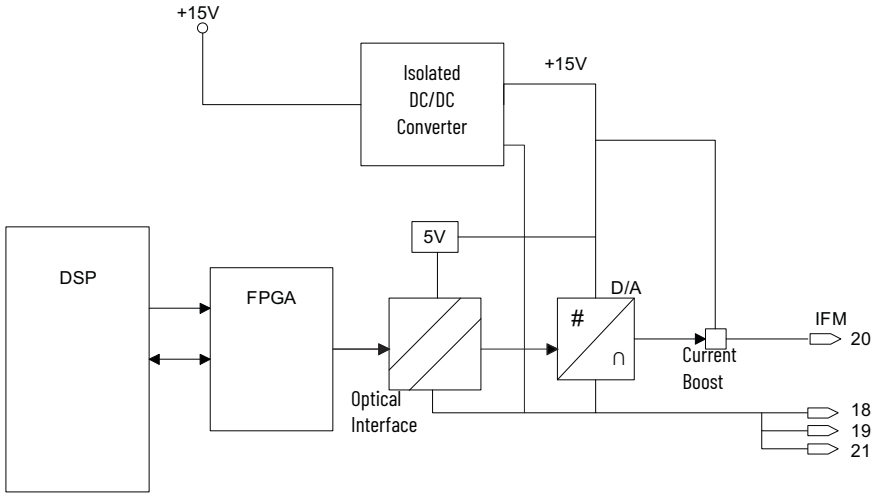

This type of transmitter is known as a 4-wire transmitter, and will "sink" current from a receiver. The receiver is connected by two wires only from pins 20 (+ connection) and either pins 18, 19, 21 (- connection).

The recommended connection is shown in Figure 108. The type of shielded cable that is used is application-specific. The type is determined by the length of the run, the characteristic impedance, and the frequency content of the signal.

Isolated Process Receiver

These inputs are individually configurable to accept either a -10/0/+10V input signal or a 4...20 mA signal. When configured for voltage input, each channel has an input impedance of 75 kΩ. When used as a current loop input, the transmitter must have a minimum loop compliance of 2V to satisfy the 100 Ω input impedance. Regardless of input configuration, each input is individually isolated to ± 100V DC or 70V RMS AC.

Figure 109 shows a block diagram of the receiver.

Figure 109 - Process Loop Receiver Block Diagram

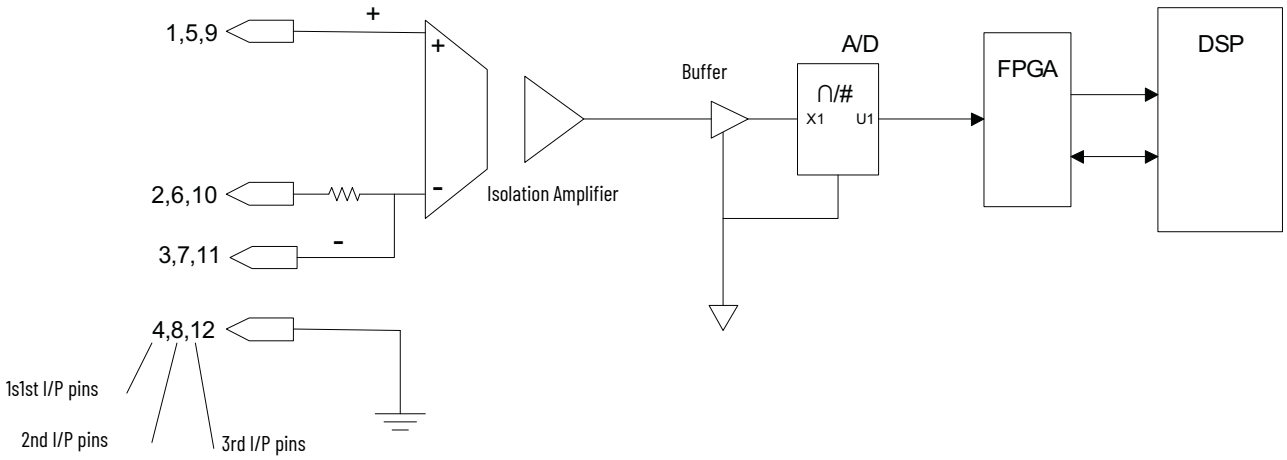

The receiver can accept 4-wire transmitters. Figure 110 shows the recommended connections. Again, the type of shielded cable that is used is application-specific as per the transmitter. Pin numbers that are shown are for connection to the first of three isolated process receivers.

Figure 110 - Process Loop Receiver Connections

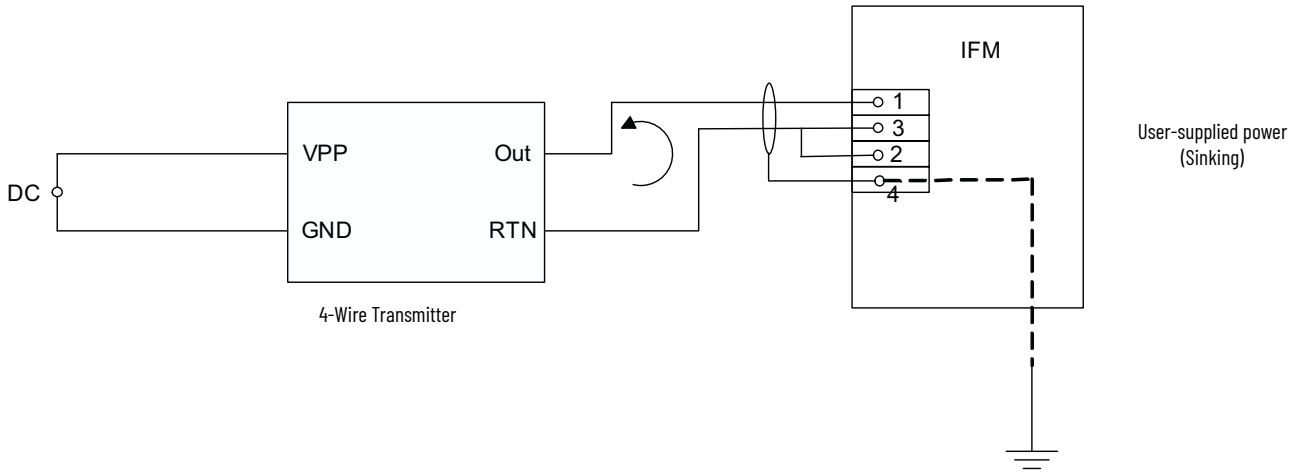

Non-Isolated Process Outputs

The drive supplies four non-isolated -10/0/+10V outputs for customer use. These outputs can drive loads with impedances as low as 600 Ω. These outputs are all referenced to the drive AGND and therefore must be isolated if they are required to drive outside the PowerFlex 'A' frame enclosure.

Figure 111 - Non-isolated Configurable Analog Outputs on ACB

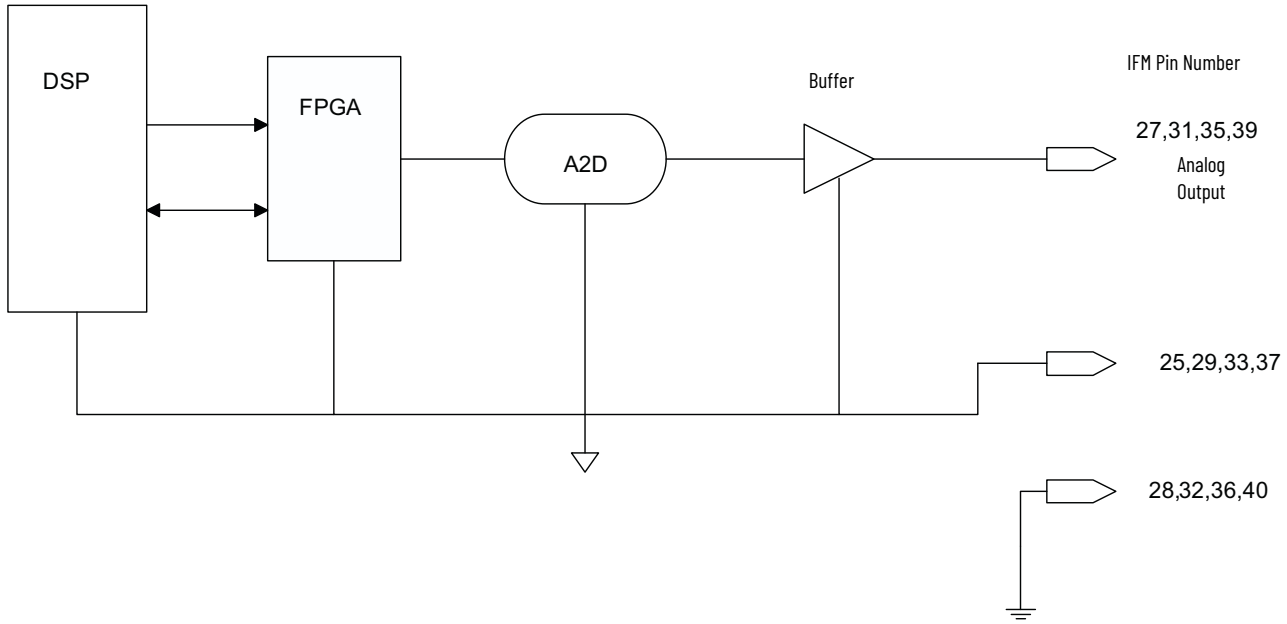

Auxiliary +24V Power Supply

An Isolated 24V Power Supply is built into the DC/DC converter (Connector P3). This supply can be used for any customer supplied equipment that requires up to 24 W at 24V. This supply can also be used to power any custom drive options, such as isolation modules for additional Process Control Outputs. The health of this power supply is monitored in the drive.

PIN NO.	DESCRIPTION
1	ISOLATOR (+24V, 1 A)
2	ISOL_COMM (com4)
3	EARTH

The ACB is common for both the line and motor-side current feedbacks. Different scaling resistors are mounted on the terminal block for line side and machine side

There are two status indicators on the ACB labeled D7 and D9. D9 is the ±15V DC voltage-OK signal, and D7 is the +5V DC voltage-OK signal.

Replacing the Analog Control Board

To replace the analog control boards,

1. Verify that all medium voltage and control voltage power to the drive is isolated and locked out.
2. It is required to remove the transparent sheet on top of the drive processor module and the drive processor module also before removing the ACB. Remove the transparent sheet on top of the DPM by removing the four screws.
3. Use static strap before removing any connectors.
4. Mark, identify, and remove the connectors J4, J11, and J12 on DPM. Use the electrical drawing as the reference. Remove the four screws holding the DPM on the standoffs above the ACB.
5. Gently remove the DPM mounted on the four, 34-pin connectors.
6. Remove the screws that hold the encoder interface board and gently remove the board that is mounted on the 8-pin connector.
7. Mark, identify, and remove the connectors J1, J2, J3, J4, J5, J6, J7, J8, J9, J10, J12, J13, J14, J16, J22, J24, J25, J26, J27 on ACB. Use the electrical drawing as the reference.
8. Remove the ACB board by removing the four screws, and six standoffs screwed to support the DPM and encoder interface board.
9. , Reinstall the boards into the low voltage control cabinet by following steps 8...2, in that order.
10. Apply low-voltage power and complete a system test and medium voltage tests. These tests verify that the new board functions properly.

Encoder Feedback Board

Encoder Options

There are two positional encoder interface boards that can be used with the PowerFlex 7000 ForGe control. The encoder interface boards do not have any test points that are accessible. However, buffered and isolated versions of each of the signals A+, A-, B+, B-, Z+ and Z- are available on the ACB at test points TP45-TP50.

Regardless of which type of encoder board, follow these conditions:

1. Do not attach encoders with open collector outputs to the drive. Acceptable outputs are analog line driver or push pull.
2. The drive does not operate properly with single ended quadrature encoders. Rockwell Automation recommends using differential inputs only for these types of encoders. Single ended outputs are only acceptable for Positional Encoders.

20B-ENC-1 & 20B-ENC-1-MX3 Encoder Interface

This encoder interface allows the drive to be connected to a standard quadrature encoder. The 20B-ENC encoder interface provides three optically isolated differential encoder inputs for A and B phases and a Z track. These inputs cannot be configured for use with single ended encoder. Differential encoders only are supported. The board also provides a galvanized, isolated 12V/3 W supply to power the attached encoder. The 20B-ENC-1 Encoder interface can be configured for 5V operation, however Rockwell Automation recommends operation at 12V.

Figure 112 - Encoder Interface (20B-ENC-1 and 20B-ENC-1-MX3)

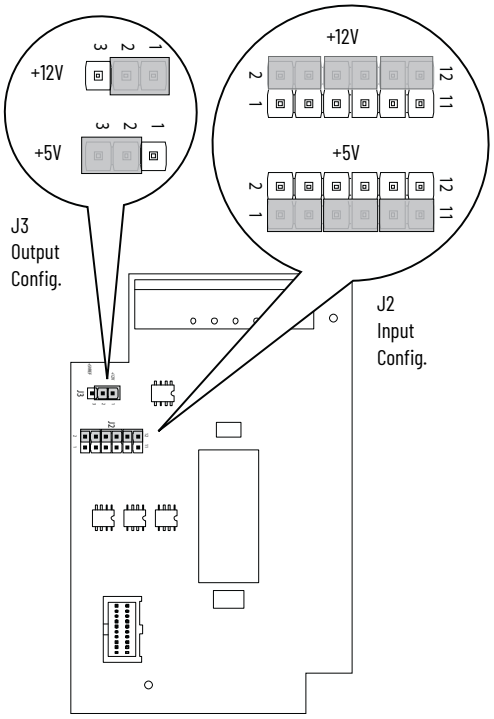

Must be configured for 12V operation.

Operation at 5V does not allow for long cable lengths as the power must be regulated within 5% at the encoder. Due to the resistance and capacitance of the cable, there would be difficultly keeping the power regulated at the encoder to 4.75V. With longer runs of cable, power could drop below the 4.75V and the encoder would not operate properly. Generally, 18 Avg cabling is used with a Rdc of 19.3 Ω/km. The longest cable distance from the board to the encoder is limited to 12 m (42 ft).

The 20B-ENC-1-MX3 encoder option is functionally identical to the 20B-ENC-1 encoder with the addition of conformal coating. Figure 112 shows the recommended jumper positions for use with the PowerFlex 7000 drive.

Input Connections

All encoder interface connections are made to J1. The connections are as follows:

- J1 Pin 1 A+
- J1 Pin 2 A-
- J1 Pin 3 B+
- J1 Pin 4 B-
- J1 Pin 5 Z+
- J1 Pin 6 Z-
- J1 Pin 7 encoder power return
- J1 Pin 8 encoder power (+12V @ 3 watts)

80190-759-01, 80190-759-02 Universal Encoder Interface

The Universal Encoder Interface allows the drive to be connected to an absolute position encoder or a standard quadrature encoder. The interface also provides the option for dual or redundant quadrature encoders. The universal encoder interface provides 12 single ended or 6 differential, optically isolated inputs, and a 12V/3 W galvanized, isolated encoder power source. When using absolute encoders, the 12 single ended inputs are used. For quadrature encoders, the six differential inputs are used.

Either type of encoder with frequencies up to 200 kHz, can be interfaced to the universal encoder interface.

The 80190-759-02 universal encoder interface is functionally identical to the 80190-759-01 with the addition of conformal coating. Jumpers that are installed on the 12-position header J4 configure the universal encoder interface. The header has three positions that are labeled 'Park' and used to store the jumpers when indicated as "Removed" in Table 7. If labeled "Installed" each function is selected by moving its corresponding jumper from the 'park' location to the selected function location. The following table describes the functions available.

ATTENTION: Removing the Universal Encoder Interface while control power is applied can result in damage to the board. Only remove the board when the control power is off.

Table 7 - Encoder Configurations

ENC_TYPE	POL_QRDNTS	CD_DQUAD	CONFIGURATIONS
Installed	Installed	Installed	Single-quadrature encoder option (factory default)
Installed	Installed	Removed	Dual-quadrature encoder option without redundancy
Installed	Removed	Removed	Dual-quadrature encoder option with redundancy
Installed	Removed	Installed	Single-quadrature option (CDSEL/DQUAD) must be removed for redundancy
Removed	Installed	Installed	Gray-code absolute encoder low-true
Removed	Installed	Removed	Natural-binary absolute encoder low-true
Removed	Removed	Installed	Gray-code absolute encoder high-true
Removed	Removed	Removed	Natural-binary absolute encoder high-true
Installed	Installed	Installed	Single-quadrature encoder option (factory default)

Figure 113 - Universal Encoder Board

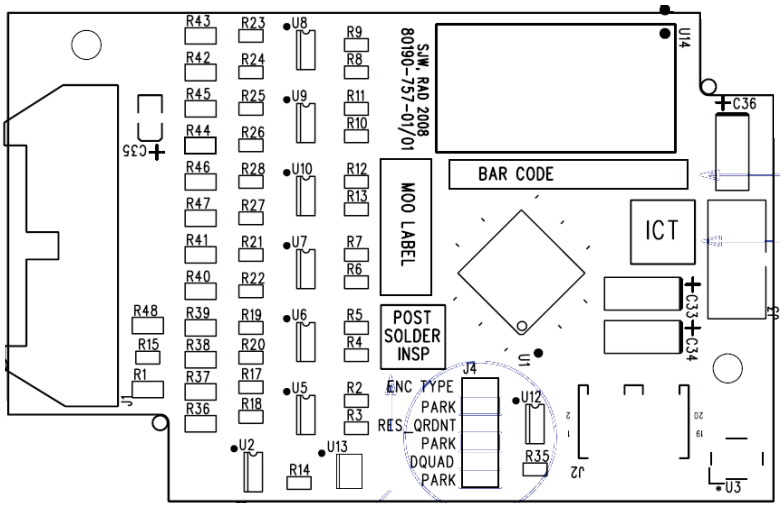

Connections to the universal encoder interface are made by way of a 1492-IFM20F interface module. The connections to the IFM are as follows:

Table 8 - Encoder Functions

IFM Pin #	Quadrature Encoder Function	Absolute Encoder Function
1	A1+	E0
2	A1-	E1
3	B1+	E2
4	B1-	E3
5	ENC_COM	ENC_COM
6	Z1+	E4
7	Z1-	E5
8	A2+ (redundant or dual ENC)	E6
9	A2- (redundant or dual ENC)	E7
10	ENC_COM	ENC_COM
11	B2+ (redundant or dual ENC)	E8
12	B2- (redundant or dual ENC)	E9
13	Z2+ (redundant or dual ENC)	E10
14	Z2- (redundant or dual ENC)	E11
15	ENC_COM	ENC_COM
16	ENC_COM	ENC_COM
17	ENC_COM	ENC_COM
18	ENC PWR (+12V)	ENC PWR (+12V)
19	ENC PWR (+12V)	ENC PWR (+12V)
20	ENC PWR (+12V)	ENC PWR (+12V)

Figure 114 - 20-pin Interface Module (IFM)

Quadrature Encoder Operation

The universal encoder interface accepts either single or dual quadrature encoders. Configuration of the board to accept the encoders is done through jumpers on J4.

Boards that are shipped from the factory come defaulted to a quadrature encoder configuration (consult factory for availability of dual quadrature encoder options).

For dual encoder configurations, the primary encoder is wired to pins 1...7 on the 1492-IFM20 module.

To select the dual encoder option, remove the CD_QUAD jumper and place the jumper in PARK. This action configures the board to accept two individual quadrature encoders. In this mode, the drive can switch between encoders for applications such as Synchronous Transfer between two motors with each having their own encoder.

For redundant encoder option, remove both the CD_QUAD and POL_QRDNT jumpers and place them in PARK. With this configuration, the drive switches over to the redundant encoder when a problem is detected with the primary encoder.

ATTENTION: When the drive switches over to the redundant encoder, the drive cannot switch back without recycling the control power.

Positional Encoder Operations[(a)]

Besides quadrature encoders, the universal encoder interface also accepts positional (absolute) encoders. Parallel positional data is converted to a serial stream and transmitted to the DPM when requested by the drive. The board also generates "pseudo" quadrature differential signals, including a zero position mark, which is derived from the binary data to the DPM.

There are three different positional encoder configurations available. For all of these configurations remove the ENC_TYPE jumper. The other jumpers configure the board for the type of positional data (Gray Code or Natural Binary) set by CD_DQUAD and high or low true data set by POL_QRDNT.

1. **Gray code, Low True**. In this configuration, the board inverts the incoming gray code data and then converts the data to binary for transmission to the DPM.
2. **Natural Binary, Low True**. No conversion is done on the incoming data but the data is inverted.
3. **Gray code, High True**. In this configuration, the incoming gray code data is converted to binary. No inversion is done on the input data.
4. **Natural Binary, High True**. The positional data is converted to the serial stream. No inversion or conversion is done on the data.

(a) Consult factory for availability of Positional Encoders.

Positional Encoder Guidelines

When selecting a positional encoder, certain guidelines must be followed for optimal performance.

1. **Code Selection:** Absolute encoders can be purchased with either gray code or Binary output format. Gray code is a form of binary code where only one-bit changes at a time for each sequential number or position. The fact that only one-bit changes at a time make reading valid positional data and not ambiguous data, easier for the universal encoder interface. If we compare the Natural Binary code to Gray code for the transition from 255 to 256, here is what we get:

	Binary Code	Gray Code
255	011111111	010000000
256	100000000	110000000

   All 9 bits changed in the Binary Code while only the MSB of the gray code changed. In the universal encoder interface, the frequency filter components and input hysteresis create delays. Differences in these delays could cause errors due to reading a bit as ON when the bit is actually transitioning to OFF or vice versa. In the case of gray code, since only 1 bit ever changes, the ambiguity error is never multiple counts. For this reason and to reduce inrush currents, Rockwell Automation recommends using gray code positional encoders.

2. **Data Polarity**: Absolute encoders typically have a High True output. If the encoder model does not have a High/True (or Non-Inverted/Inverted) option, you must assume the output to be High True. In a 10-bit High True encoder, the zero position is 0000000000. In a Low/True encoder, the zero position is 1111111111. On the universal encoder interface, the position data is inverted in hardware. A '1' turns on an optocoupler and produces a '0'. Therefore a High True encoder would produce 1111111111 for the zero position. With the POL_QRDNT jumper, you can control the polarity of the input. With the jumper installed (factory default), the jumper is designed to accept High True encoders and an extra inversion is done in the Universal Encoder Interface. If you are using a Low True encoder, remove the jumper. The optocouplers alone invert the zero position.

   The other role of the POL_QRDNT jumper is to correct the data, in the event the encoder was mounted so that a CCW rotation produced decremented counts. If so the POL_QRDNT jumper must be configured to the opposite of what, the jumper must normally be for the data polarity. For example if the universal encoder interface is configured to operate with High True encoders (POL_QRDNT installed), remove the jumper to correct for encoder mounting.

External Input/output Boards

The external input/output (XIO) boards are connected through a network cable (CAN Link) to the Analog Control Board (ACB). This cable can be connected to either XIO Link A (J4) or XIO Link B (J5). The XIO board handles all external digital input and output signals and sends them to the ACB through the cable. There are 16 isolated inputs and 16 isolated outputs on the card, and they are used for Runtime I/O including Start, Stop, Run, Fault, Warning, Jog, and External Reset signals. The boards also handle the standard drive fault-signals (for example transformer/line reactor overtemperature, DC link overtemperature) and several spare fault inputs that are configurable. There is an option in software to assign each XIO a specific function (General I/O, External I/O, or liquid cooling).

Figure 115 - XIO Board

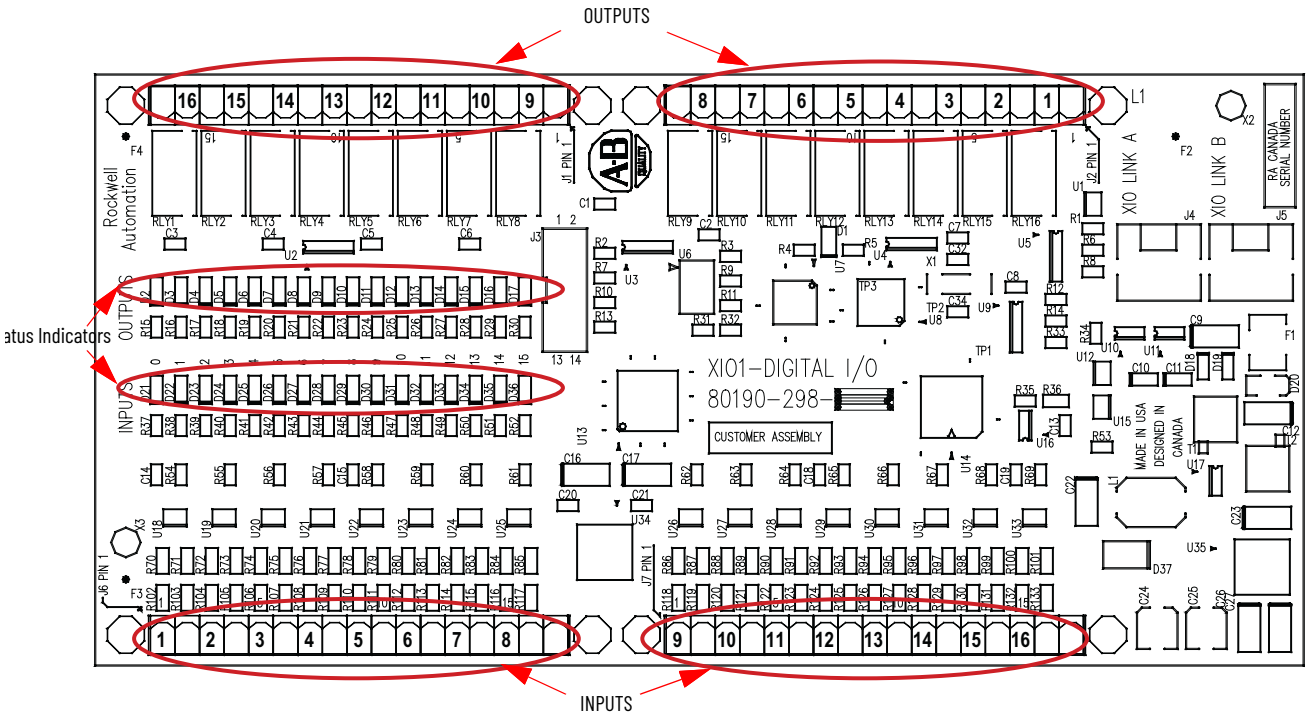

The standard drive comes with one XIO board. Additional boards (up to five) can be daisy chained together. From XIO Link B (J5) on the first board to XIO Link A (J4) on the second board, for a total of six XIO cards. However, currently the drive only supports the use of addresses 1 to 3, depending on the features and application of the drive. U6 on the XIO board displays the address of the board, which is automatically calculated from position of the XIO board in the network. XIO Link A and B ports are interchangeable. To make wiring easier to follow use:

- Link A for “upstream”, that is, closest to the ACB.
- Link B for “downstream” or farthest from the ACB.

Status indicator D1 and display U6 indicate the status of the board. See Table 9 for the possible status for D1.

Table 9 - D1 Display Status

Status Indicator Status	Description
Solid Green	Normal operation
Solid Red	Board failure
Alternate Flashes of Red and Green	No communication available to ACB board (Normal during start up or not programmed)

Table 10 - U6 Display Status

Display	Description	Explanation
–	No valid address found	• More than six XIO cards on network • XIO cable failure • XIO card failure • ACB failure
0	Card in “Master” mode	• Rockwell Automation use only • Remove connection to J3 and recycle power
1...6	Valid address	• Normal
Decimal point ON	Indicates network activity	• Normal
Decimal point OFF	No activity on the network	• Normal at Power-on, during firmware download and with unprogrammed drive

External Input/output Board Replacement

1. Verify that all medium voltage and control voltage power to the drive is isolated and locked out.
2. Note and Mark the location and orientation of all plugs, cables, and connectors into the XIO board. Use the electrical drawing as a reference.
3. Use your static strap, disconnect all connections.
4. Remove the XIO board assembly from the low-voltage control cabinet. The XIO board mounts on a DIN rail. A 3-piece assembly is used to secure the board. Remove the old board and install the new board in its place.
5. Install the new XIO board assembly in the low-voltage control cabinet.
6. Reconnect all connections and verify the locations.
7. To verify that the new board functions properly, apply Low Voltage power and complete a System Test and Medium Voltage test.

Optical Interface Boards

The Optical Interface (OIB) Boards are the interface between the DPM and the Gate Driver circuitry. The drive control decides which device to fire, and sends an electrical signal to the OIB boards. The OIB board converts that electrical signal to an optical signal. The signal is sent fiber-optically to the gate driver cards. Typically, the Transmit ports are gray and the Receive ports are blue. The gate driver accepts that signal and turns the device on and off accordingly. The diagnostic fiber-optic signals work the same way, but the source is the gate driver boards and the destination is the drive control boards. Each OIB contains one extra fiber-optic receiver (RX7), which is used for temperature measurement.

Figure 116 - Optical Interface Board

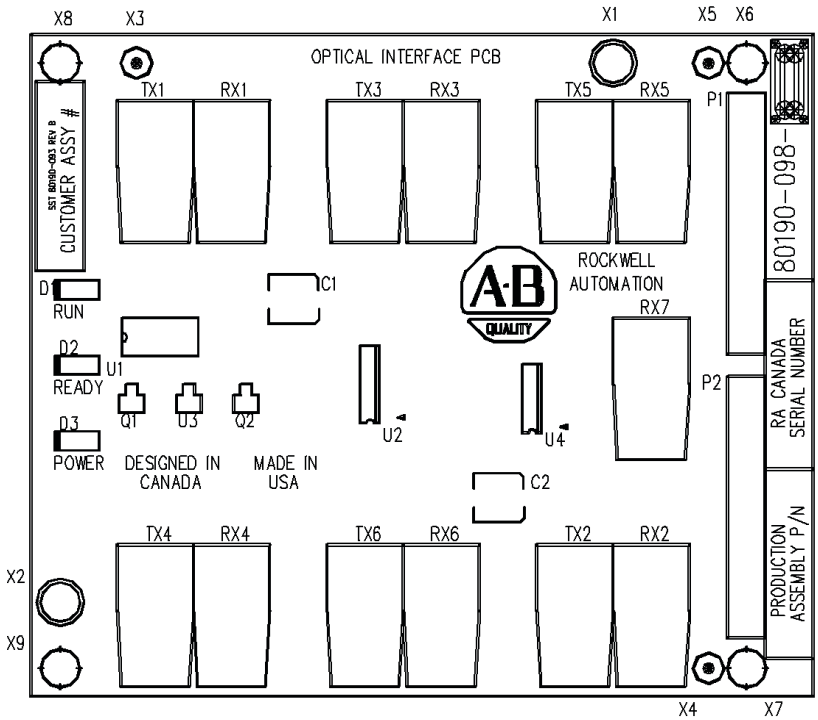

The OIB boards are mounted directly on the Optical Interface Base Board (OIBB) by two parallel 14-pin connectors for the electrical connection, and plastic clips to provide the mechanical strength. There is one OIBB for the inverter, and one OIBB for the rectifier device. The OIBBs are interfaced to the DPM with two ribbon cables to connect to J11 and J12.

Each OIB board can handle the Firing and Diagnostic duplex fiber-optic connector for six devices. Physically, on the OIBBs, there is provision for 18 devices for the inverter and the rectifier. This capacity is enough to handle the highest rated drive that we currently produce. The top OIB board on the OIBB is for the 'A' devices. The middle OIB board is for the 'B' devices. The bottom OIB board is for the 'C' devices.

Figure 117 - Optical Interface Base Board (OIBB)

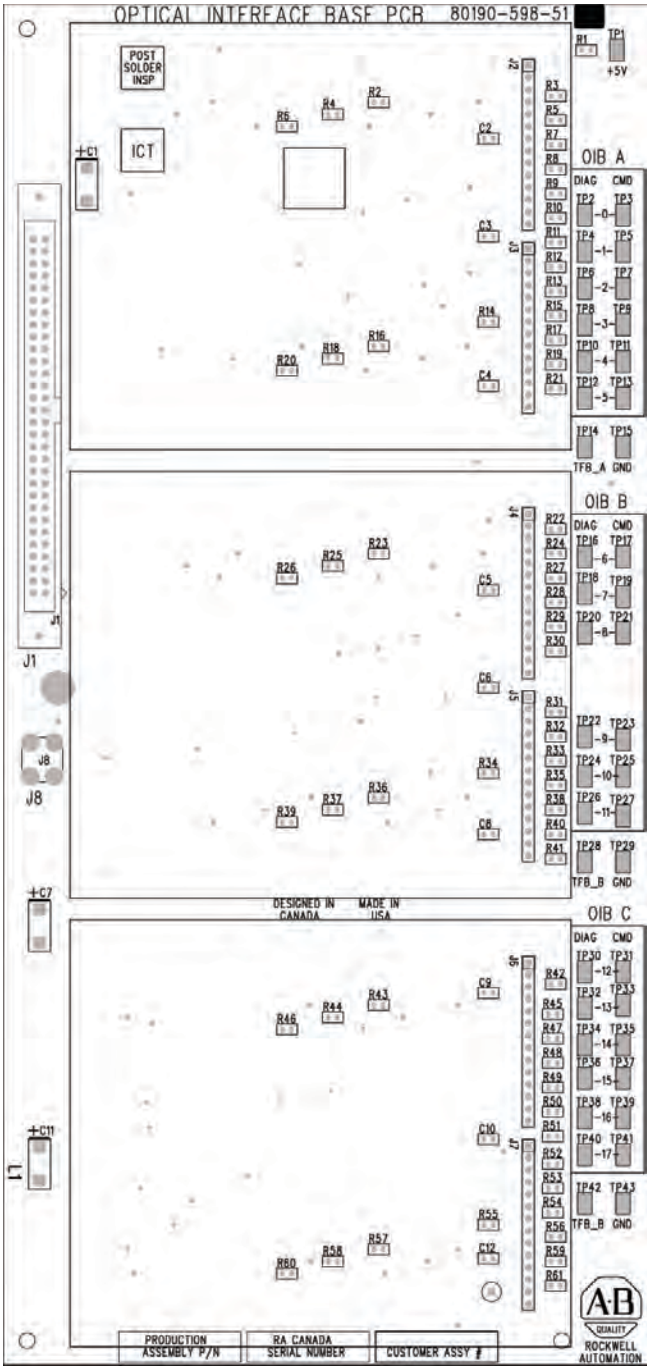

Each OIB also has input RX7 for a signal from a temperature feedback board. The quantity and location of thermistor connections is dependent on the drive configuration. Typically there is one temperature sensor from the line converter and one temperature sensor from the machine converter, each going into the respective OIB in the 'A' position. However some drive configurations only require one thermistor feedback connection. The temperature feedback connection on OIBC is not implemented on the OIBB and is never used. For more information, see the drawings that are supplied with your drive. The alarm and trip set points for each of these signals is programmable in software.

There are three status indicators on the OIB. This table describes the status and description for the status indicator states:

Status Indicator	Status	Description
D1	Red – On	Run – The OIB has received an Enable signal. The drive control software is in control of all gating.
D2	Yellow – On	Ready –The OIB power supply is sufficient for proper operation.
D3	Green – On	Power – The OIB has received a voltage signal greater than 2V.

Optical Interface Board Replacement

IMPORTANT If the drive is equipped with the Safe Torque Off option, the drive uses OIBBS boards. See publication 7000-UM203 to replace the OIBBS.

1. Isolate and locked out all power to the drive.
2. Note and mark the location and orientation of all fiber-optic cables. Use the electrical drawing for reference.

IMPORTANT Use a static strap when performing this procedure.

3. Disconnect all fiber-optic cables.
4. Remove the OIB board from the OIBB.

   Carefully handle the four standoffs, which snap into place on the OIB, when disconnecting the boards.

   Carefully handle the 28-pin connection between the boards. Avoid bending the pins.
5. Remove the 60-pin cable connector on the OIBB and the ground connection.
6. Remove the ground nut that holds the OIBB in place.
7. Carefully handle the five standoffs that snap into place on the OIBB, when removing the boards.
8. Install the new OIBB. Verify that the standoffs snap into place.
9. Reinstall the ground nut that holds the OIBB in place.
10. Reconnect all connections and verify the locations.

ATTENTION: Reconnect the fiber-optic cables in their proper location. Failure to do so can result in injury or damage to equipment.

Figure 118 - OIB Replacement (Mounting Plate Accessible)

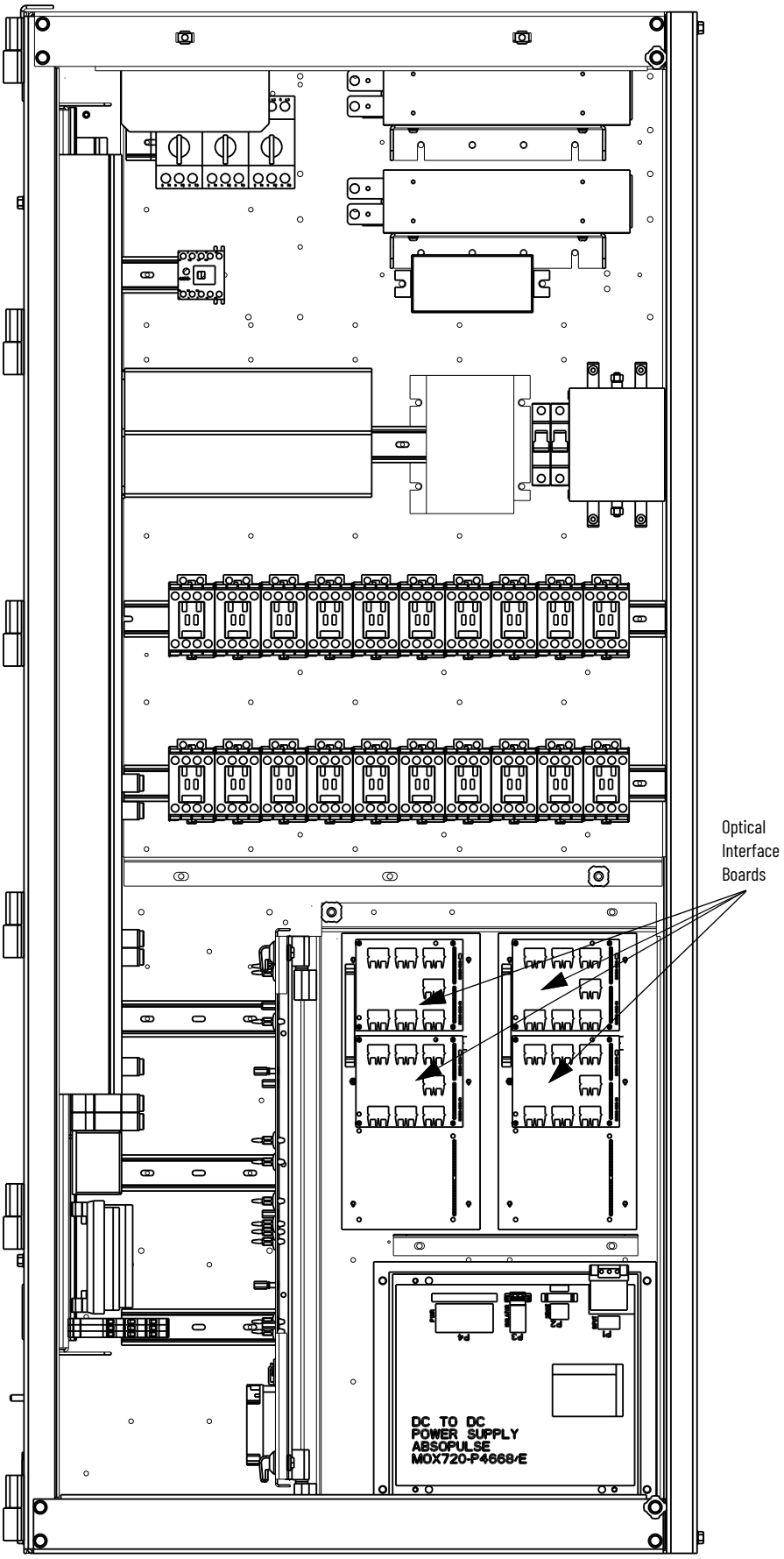

Preventative Maintenance Schedule

Preventative Maintenance Checklist

The preventive maintenance activities on the PowerFlex® 7000 "A" Frame can be broken down into two categories:

- Operational Maintenance – can be completed while the drive is running.
- Annual Maintenance – must be completed during scheduled downtime.

See the Tools/Parts/Information Requirements at the end of this section for a list of documentation and materials that are required to complete the preventive maintenance documents.

Operational Maintenance

This process requires the changing or the cleaning the air filters. The PowerFlex 7000 drives require consistent, unrestricted airflow to keep the power devices cool. The air filter is the main source of blockage in the air path.

The drive provides an air filter alarm whenever the pressure differential across the devices drops to a drive-specific level. By referring to the Air-Filter Block parameter, this differential can be anywhere from 7…17% blocked, depending on the heat sink and device configuration. This percentage can seem small, but it takes significant blockage to begin to lower the voltage from the pressure sensor. The percentage is a measure of voltage drop, and must not be viewed as a percentage of the opening that is covered. They are not related linearly.

If you receive an Air Filter Warning, change or clean the filter. If the drive reaches an Air Filter Fault is dependent on site-specific particle conditions.

Annual Maintenance

These maintenance tasks must be performed on an annual basis. These tasks are recommended, and depending on the installation conditions and operating conditions, you can find that the interval can be lengthened. For example, we do not expect that the tightening of torqued power connections is required every year. Due to the critical nature of the applications that are run on MV drives, the key word is preventive. By spending approximately 8.0 hr/yr on these tasks, unexpected downtime can be reduced.

Initial Information Gathering

Some of the important information to be recorded includes:

- Print Drive Setup.
- Print Fault/Warning Queues.
- Save Parameters to NVRAM.
- Save Parameters to Operator Interface.
- Circuit Board Part Numbers / Serial Numbers / Revision Letters (record only if parts have been modified or changed since Preventive Maintenance was last performed).

ATTENTION: To avoid electrical shock, verify that the main power has been disconnected before working on the drive. Use a hot stick or appropriate voltage-measuring device to verify that all circuits are voltage free. Failure to do so can result in injury or death.

Physical Checks

Ensure there is no medium voltage and control power when performing these physical checks.

1. Power Connection Inspection
   a. Inspect PowerFlex 7000A drive, input/output/bypass contactor sections, and all associated drive components for power cable and ground cable connections that are loose. Torque them to specifications.
   b. Inspect the bus bars and check for any signs of discoloration from overheating. Toque the bus connections to specifications.
   c. Clean all cables and bus bars that exhibit dust build-up.
   d. Use torque sealer on all connections.
2. Conduct the integrity checks on the signal ground and safety grounds.
3. Check for any visual or physical evidence of damage or degradation of components in the low voltage compartments.
   a. Inspect relays, contactors, timers, terminal connectors, circuit breakers, ribbon cables, control wires for corrosion, excessive temperature, or contamination.
   b. Clean all contaminated components by using a vacuum cleaner (DO NOT use a blower). Wipe clean components where appropriate.
4. Check for any visual or physical evidence of damage or degradation of components in the medium voltage compartments. For example inverter/rectifier, cabling, DC Link, contactor, load break, and harmonic filter.
   a. Inspect main cooling-fan, power devices, heatsinks, circuit boards, insulators, cables, capacitors, resistors, current transformers, potential transformers, fuses, wiring. Causes could be corrosion, excessive temperature, or contamination.
   b. Verify torque on heatsink bolts (electrical connections to bullet assemblies) is within specifications (13.5 N•m [10.0 lb•ft]).
   c. Clean all contaminated components by using a vacuum cleaner and wipe clean components where appropriate.

IMPORTANT Do not use a blower.

IMPORTANT An important component to check for contamination is the heatsink. The fine grooves in the aluminum heatsinks can capture dust and debris.

5. Physically inspect and verify for the proper operation of the contactor/isolator interlocks, and door interlocks.
   a. Inspect and verify the proper operation of the key interlocks.
   b. Verification the additional cooling fans are mounted in the AC Line Reactor cabinet, Harmonic Filter cabinet for mounting and connections.
   c. Clean the fans and verify that the ventilation passages are not blocked and the impellers are freely rotating without any obstruction.

d. Do the insulation resistance test of the drive, motor, isolation transformer/line reactor, and the associated cabling. See Insulation Resistance Testing Procedures on page 178 for the insulation resistance test procedure.

e. Check indicator washers of the clamp head for proper clamp pressure, and adjust as necessary. See page 76 for details on proper clamp pressure.

Control Power Checks (No Medium Voltage)

1. Apply Control power to the PowerFlex drive. Test power to all vacuum contactors (input, output, and bypass) in the system. Verify that all contactors can close and seal in.
2. See Publication 1502-UM050 for a detailed description of all contactor maintenance.
3. Verify all single-phase cooling-fans for operation, including the cooling fans in the AC/DC Power supplies and the DC/DC converter.
4. Verify the proper voltage levels at the CPT (if installed), AC/DC Power Supplies, DC/DC converter, isolated gate power-supply boards.

   See page 187 for appropriate procedures/voltage levels for the previously referenced checks.
5. Verify the gate pulse patterns by using the Gate Test Operating Mode.

   For drives with SPS boards installed, use the Test Power Harness (80018-695-51) to power the rectifier SGCT boards.
6. If there have been any changes to the system during the outage, place the drive in System-Test Operating Mode and verify all functional changes.

Final Power Checks before Restarting

1. Verify that all cabinets are cleared of tools, and all component connections are back in place and in the running state.
2. Put all equipment in normal operating mode, and apply medium voltage.
3. If there were any input or output cables that are removed, verify the input-phasing, and bump the motor for rotation.
4. If there were any changes to the motor, input transformer, or their associated cabling, retune the drive to the new configuration using Autotuning.
5. Save all parameter changes (if any) to NVRAM.
6. Run the application up to full speed/full load, or to customer satisfaction.
7. Capture the drive variables while running, in the highest access level if possible.

Additional Tasks during Preventive Maintenance

1. Investigation of customer concerns that relate to drive performance. Relate any problems that are found during maintenance procedures to customer issues.
2. Informal instruction on drive operation and maintenance for plant maintenance personnel

   a. Reminder of safety practices and interlocks on MV equipment, and on specific operating concerns.

   b. Reminder of the need to identify operating conditions properly.

3. Recommendation for critical spare parts, which can be stocked in-plant to reduce production downtime.
   a. Gather information on all spare parts on site, and compare that with factory-recommended critical spares. Evaluate that levels are sufficient.
   b. Contact MV Spare Parts group for more information.
4. Vacuum Bottle Integrity Testing by using a Vacuum Checker or AC high potential. See Publication 1502-UM050 for a detailed description of all contactor maintenance.

Final Reporting

1. A complete, detailed report on all steps in the Preventive Maintenance procedures must be recorded to identify changes.

- A completed copy of this checklist must be included.
- Make an addendum with detailed descriptions of all adjustments and measurements that were made include Interlock Adjustments, Loose Connections, Voltage Readings, Insulation Resistance Results, Parameters, and so forth.

2. This information must be communicated to MV Product Support so future support activities have the latest site information available.

   Faxed to (519) 740-4756 or
   E-mailed to MVSupport_Technical@ra.rockwell.com.

Time Estimations

Operational Maintenance	0.5 hours per filter
Annual Maintenance	
• Initial Information Gathering	0.5 hours
• Physical Checks	
– Torque Checks	2.0 hours
– Inspection	2.0 hours
– Cleaning(1)	2.5 hours(1)
– Insulation Resistance	1.5 hours
• Control Power Checks	
– Contactor Adjustments(1)	2.0 hours(1)
– Voltage Level Checks	1.0 hour
– Firing Check	0.5 hours
– System Test(1)	2.0 hours(1)
• Medium Voltage Checks	
– Final Inspection	0.5 hours
– Phasing Check(1)	1.5 hours(1)
– Autotuning(1)	2.0 hours(1)
– Operation to Maximum Load	Site Dependent
• Additional Tasks(1)	
– Investigation	Varies with nature of Problem
– Informal Training/Refresher	2.0 hours
– Spare Parts Analysis	1.0 hour
– Vacuum Bottle Integrity Check	3.0 hours
• Final Report	3.0 hours

(1) Time cannot be required depending on the nature of the maintenance and the condition of the drive system. These times are only estimations.

Tool / Parts / Information Requirements

The following is a list of the tools that are recommended for proper maintenance of the PowerFlex 7000 drives. Not all tools are required to perform a specific procedure for drive preventive. To complete all tasks that are listed above, these tools would be required.

Tools

- 100 MHz Oscilloscope with a minimum 2 Channels and memory.
- 5 kV DC insulation resistance tester.
- Digital Multimeter.
- Torque Wrench.
- Laptop Computer with Relevant Software and Cables.
- Assorted Hand Tools (Screwdrivers, Open Ended Metric Wrenches, Metric Sockets, and so forth).
- 8 mm Allen Keys.
- Speed Wrench.
- Feeler Gauge.
- Vacuum Bottle Checker or AC-high potential.
- Minimum of 15 kV Hotstick / Potential Indicator.
- Minimum of 10 kV Safety Gloves.
- Vacuum Cleaner with anti-static hose.

- Anti-static Cleaning Cloth.
- No. 30 Torx Driver.

Documentation

- PowerFlex 7000 Parameters Manual – Publication 7000-TD002.
- 400 A Vacuum Contactor Manual – Publication 1502-UM050.
- Drive-Specific Electrical and Mechanical Prints.
- Drive-Specific Spare Parts List.

Materials

- Torque Sealer (Yellow) Part number --- RU6048.
- Electrical Joint Compound ALCOA EJC No. 2 or approved equivalent (For Power Devices).
- Aeroshell no. 7 Part number 40025-198-01 (for Vacuum Contactors).

Maintenance Schedule

By rigorously following this maintenance schedule, the Customer can expect to have peak product availability and the highest possible uptime. This Annual, Preventative Maintenance Program includes a visual inspection of:

- All drive components visible from the front of the unit.
- Resistance checks on the power components.
- Power supply voltage-level checks.
- General cleaning and maintenance.
- Checking of all accessible power connections for tightness, and other tasks.

For more details, see Chapter 3 on page 47 of this user manual.

I – Inspection	The component must be inspected for signs of excessive accumulation of dust, dirt, and so forth, or external damage. For example, examine the Filter Capacitors for bulges in the case, inspect the heatsinks for debris that can clog the Airflow path.
M – Maintenance	A maintenance task that is not normally a preventative maintenance task and can include the inductance testing of Line Reactors/DC Links, or the full testing of an isolation transformer.
R – Replacement	The component has reached its mean operational life. To decrease the chance of failure, replace the component. It is likely that components exceed the design life in the drive, and that is dependent on many factors such as usage, heat.
C – Cleaning	The cleaning of a part that can be reused, and refers specifically to the door-mounted air filters in the liquid-cooled drives and some air-cooled drives.
Rv – Review	A discussion with Rockwell Automation to determine whether any of the enhancements/changes made to the Drive Hardware and Control would be valuable to the application.
RFB/R – Refurbishment/Replacement	The parts can be refurbished at lower cost or the parts can be replaced with new ones.

Table 11 - PowerFlex 7000 Drive Preventative Maintenance Schedule (Years 0...10)

Period Interval (Years)		0	1	2	3	4	5	6	7	8	9	10
Air-Cooling System	Door Mounted Air Filters(1) (2)	C/R	C/R	C/R	C/R	C/R	C/R	C/R	C/R	C/R	C/R	C/R
	Main Cooling Fan Motor		I	I	I	I	I	I	RFB/R	I	I	I
	Redundant Cooling Fan Motor (if supplied)		I	I	I	I	I	I	RFB/R	I	I	I
	Small Aux. Cooling Fans "Caravel"		I	I	I	I	R	I	I	I	I	R
Power Switching Components	Power Devices (SGCTs/SCRs)		I	I	I	I	I	I	I	I	I	I
	Snubber Resistors/Sharing Resistors/ HECS		I	I	I	I	I	I	I	I	I	I
	Rectifier Snubber Capacitors(3)(4)		I	I	I	I/R (4)	I	I	I	I/R(4)	I	Rv/R(4)
	Inverter Snubber Capacitors(5)(6)		I	I	I	I	I	I	I	I	I	R
	Integrated Gate Driver Power Supply		I	I	I	I	RFB/R	I	I	I	I	RFB/R
	Self-Powered SGCT Power Supply (SPS)		I	I	I	I	RFB/R	I	I	I	I	RFB/R
Integral Magnetics/Power Filters	Isolation Transformer/Line Reactor		I	I	I	I	M	I	I	I	I	M
	DC Link/CMC		I	I	I	I	M	I	I	I	I	M
	Line/Motor Filter Capacitors		I	I	I	I	M	I	I	I	I	M
Control Cabinet Components	AC/DC and DC/DC Power Supplies		I	I	I	I	RFB/R	I	I	I	I	RFB/R
	Control Boards		I	I	I	I	I	I	I	I	I	I
	Batteries (DCBs and CIB)		I	I	R	I	I	R	I	I	R	I
	Battery Module (UPS)(7)		I	I	I	I	R	I	I	I	I	R
Connections	Low Voltage Terminal Connections/ Plug-in Connections		I	I	I	I	I	I	I	I	I	I
	Medium Voltage Connections		I	I	I	I	I	I	I	I	I	I
	Heatsink Bolted Connections		I	I	I	I	I	I	I	I	I	I
	Medium Voltage Connections (Rectifier)(3)		–	–	–	I(3)	–	–	–	I(3)	–	I(3)
	Medium Voltage Connections (Inverter)(5)		–	–	–	–	–	–	–	–	–	I
Enhancements	Firmware		–	–	Rv	–	–	Rv	–	–	Rv	–
	Hardware		–	–	Rv	–	–	Rv	–	–	Rv	–
Operational Conditions	Parameters		I	I	Rv	I	I	Rv	I	I	Rv	I
	Variables		I	I	Rv	I	I	Rv	I	I	Rv	I
	Application Concerns		I	I	Rv	I	I	Rv	I	I	Rv	I
Spare Parts	Inventory/Needs		I	I	Rv	I	I	Rv	I	I	Rv	I

(1) If filter supplied is not a washable type, replace filter. If filter supplied is a washable type, wash or replace (depending on state of filter).
(2) These components may be serviced while the VFD is running.
(3) When rectifier snubber capacitors are replaced, the MV connections for the rectifier need to be inspected.
(4) A 4-year rectifier snubber capacitor replacement interval applied only to drives with 6-pulse or 18-pulse rectifiers shipped before 2012 (rectifier snubber capacitors are blue). However, current enhanced replacement rectifier snubber capacitors extend this to a 10-year replacement interval (replacement rectifier snubber capacitors are black). A 10-year rectifier snubber capacitor replacement interval has always applied to drives with AFE rectifiers.
(5) When inverter snubber capacitors are replaced, the MV connections for the inverter need to be inspected.
(6) A 10-year inverter snubber capacitor replacement interval applies to all drive configurations.
(7) Replace UPS batteries annually for 50°C rated VFDs.

Table 12 - PowerFlex 7000 Drive Preventative Maintenance Schedule (Years 11...20)

Period Interval (Years)		11	12	13	14	15	16	17	18	19	20
Air-Cooling System	Door Mounted Air Filters(1) (2)	C/R	C/R	C/R	C/R	C/R	C/R	C/R	C/R	C/R	C/R
	Main Cooling Fan Motor	I	I	I	RFB/R	I	I	I	I	I	I
	Redundant Cooling Fan Motor (if supplied)	I	I	I	RFB/R	I	I	I	I	I	I
	Small Aux. Cooling Fans "Caravel"	I	I	I	I	R	I	I	I	I	I
Power Switching Components	Power Devices (SGCTs/SCRs)	I	R	I	I	I	I	I	I	I	I
	Snubber Resistors/Sharing Resistors/ HECS	I	I	I	I	I	I	I	I	I	I
	Rectifier Snubber Capacitors(3)(4)	I	I/R (4)	I	I	I	I/R (4)	I	I	I	I
	Inverter Snubber Capacitors(5)(6)	I	I	I	I	I	I	I	I	I	I
	Integrated Gate Driver Power Supply	I	I	I	I	RFB/R	I	I	I	I	I
	Self-Powered SGCT Power Supply (SPS)	I	I	I	I	RFB/R	I	I	I	I	I
Integral Magnetics/Power Filters	Isolation Transformer/Line Reactor	I	I	I	I	M	I	I	I	I	I
	DC Link/CMC	I	I	I	I	M	I	I	I	I	I
	Line/Motor Filter Capacitors	I	I	I	I	M	I	I	I	I	I
Control Cabinet Components	AC/DC and DC/DC Power Supplies	I	I	I	I	RFB/R	I	I	I	I	I
	Control Boards	I	I	I	I	I	I	I	I	I	I
	Batteries (DCBs and CIB)	I	R	I	I	R	I	I	R	I	I
	Battery Module (UPS)(7)	I	I	I	I	R	I	I	I	I	I
Connections	Low Voltage Terminal Connections/ Plug-in Connections	I	I	I	I	I	I	I	I	I	I
	Medium Voltage Connections	I	I	I	I	I	I	I	I	I	I
	Heatsink Bolted Connections	I	I	I	I	I	I	I	I	I	I
	Medium Voltage Connections (Rectifier)(3)	–	I(3)	–	–	–	I(3)	–	–	–	–
	Medium Voltage Connections (Inverter)(5)	–	–	–	–	–	–	–	–	–	–
Enhancements	Firmware	–	Rv	–	–	Rv	–	–	Rv	–	–
	Hardware	–	Rv	–	–	Rv	–	–	Rv	–	–
Operational Conditions	Parameters	I	Rv	I	I	Rv	I	I	Rv	I	–
	Variables	I	Rv	I	I	Rv	I	I	Rv	I	–
	Application Concerns	I	Rv	I	I	Rv	I	I	Rv	I	–
Spare Parts	Inventory/Needs	I	Rv	I	I	Rv	I	I	Rv	I	–

(1) If filter supplied is not a washable type, replace filter. If filter supplied is a washable type, wash or replace (depending on state of filter).
(2) These components may be serviced while the VFD is running.
(3) When rectifier snubber capacitors are replaced, the MV connections for the rectifier need to be inspected.
(4) A 4-year rectifier snubber capacitor replacement interval applied only to drives with 6-pulse or 18-pulse rectifiers shipped before 2012 (rectifier snubber capacitors are blue). However, current enhanced replacement rectifier snubber capacitors extend this to a 10-year replacement interval (replacement rectifier snubber capacitors are black). A 10-year rectifier snubber capacitor replacement interval has always applied to drives with AFE rectifiers.
(5) When inverter snubber capacitors are replaced, the MV connections for the inverter need to be inspected.
(6) A 10-year inverter snubber capacitor replacement interval applies to all drive configurations.
(7) Replace UPS batteries annually for 50°C rated VFDs.

General Notes

Maintenance of Medium Voltage Equipment

ATTENTION: The servicing of energized Medium-Voltage Motor Control Equipment can be hazardous. Severe injury or death can result from electrical shock, bump, or unintended actuation of controlled equipment. Recommended practice is to disconnect and lockout control equipment from power sources, and release stored energy, if present.

For countries following NEMA standards, refer to:

- National Fire Protection Association Standard No. NFPA70E, Part II and (as applicable).
- OSHA rules for Control of Hazardous Energy Sources (Lockout/Tagout).
- OSHA Electrical Safety Related Work Practices including:
- Procedural requirements for lockout-tagout.
- Appropriate work practices, personnel qualifications, and required training.
- Where it is not feasible to de-energize and lockout or tagout electric circuits and equipment before working on or near exposed circuit parts.
- For countries following IEC standards, refer to local codes and regulations.

Periodic Inspection

Medium voltage motor control equipment must be inspected periodically. Inspection intervals must be based on environmental and operating conditions and adjusted as indicated by experience. An initial inspection within 3 to 4 months after installation is suggested. See the following standards for general guidelines for setting-up a periodic maintenance program.

For countries following NEMA standards, refer to:

- National Electrical Manufacturers Association (NEMA) Standard
  - No. ICS 1.1 (Safety Guidelines for the Application, Installation, and Maintenance of Solid-Sate Control) for MV Drives.
  - ICS 1.3 (Preventive Maintenance of Industrial Control and Systems Equipment) for MV Controllers.

For countries following IEC standards, refer to:

- IEC 61800-5-1 Sec. 6.5 for MV Drives.
- IEC 60470 Sec. 10.
- IEC 62271-1 Sec. 10.4 for MV Controllers.

Contamination

If inspection reveals that dust, dirt, moisture, or other contamination has reached the control equipment, the cause must be mitigated. Contamination could indicate unsealed enclosure openings (conduit or other) or incorrect operating procedures. Replace any damaged or embrittled seals and repair or replace any other damaged or malfunctioning parts (for example, hinges, fasteners). Dirty, wet, or contaminated control devices must be replaced unless they can be cleaned effectively by vacuuming or wiping. Do not clean with compressed air. The compressed air can displace dirt, dust, or debris into other parts or equipment, or damage delicate parts.

High-voltage Testing

High-voltage insulation resistance (IR) or dielectric withstanding voltage (insulation resistance) tests must not be used to check solid-state control equipment. When insulation resistance testing electrical equipment such as transformers or motors, solid-state devices must be bypassed before performing the test. Even though no damage can be readily apparent after a insulation resistance test, the solid-state devices are degraded and repeated application of high voltage can lead to failure.

Maintenance after a Fault Condition

Opening of the short circuit protective device (such as fuses or circuit breakers) in a properly coordinated motor branch circuit indicates a fault condition in excess of operating overload. Such conditions can damage medium-voltage motor control equipment. Before power, is restored the fault condition must be corrected and any repairs or replacements must be made to the medium-voltage motor control equipment. See NEMA Standards Publication No. ICS-2, Part ICS2-302 for procedures. To maintain the integrity of the equipment, use only Allen-Bradley recommended replacement parts and devices. Verify that the parts are properly matched to the model, series, and revision level of the equipment. After maintenance or repair of the equipment, always test the control system for proper functioning under controlled conditions (that avoid hazards if a control malfunction). For additional information, see NEMA ICS 1.3, PREVENTIVE MAINTENANCE OF INDUSTRIAL CONTROL AND SYSTEMS EQUIPMENT. Published by the National Electrical Manufacturers Association, Also NFPA70B, ELECTRICAL EQUIPMENT MAINTENANCE, published by the National Fire Protection Association.

Part-specific Notes

Cooling-fans

Inspect fans that are used for forced air cooling. Replace any that have bent, chipped, or missing blades, or if the shaft does not turn freely. Apply power momentarily to check operation. If unit does not operate, check and replace wiring, fuse, or fan motor as appropriate. Clean or change air filters as recommended in the Users Manual.

Operating Mechanisms

Check for proper functioning and freedom from sticking or binding. Replace any broken, deformed or badly worn parts or assemblies according to the product User Manuals. Check for and securely tighten any loose fasteners. Lubricate, if specified in individual product instructions. Many devices are factory-lubricated. If lubrication during use or maintenance of these devices is needed, the procedure is specified in their individual product instructions or User Manual.

IMPORTANT	Allen-Bradley® magnetic starters, contactors, and relays are designed to operate without lubrication. Do not lubricate these devices, because oil or grease on the pole faces (the mating surfaces) of the operating magnet can cause the device to stick in the 'ON' mode.

Contacts

Check contacts for excessive wear and dirt accumulations. Vacuum or wipe contacts with a soft cloth if necessary to remove dirt. Discoloration and slight pitting do not harm Contacts. Do not file contacts, as dressing only shortens contact life. Do not use spray cleaners on contacts, as their residues on magnet pole faces or in operating mechanisms can cause sticking and can interfere with electrical continuity. Contacts must only be replaced after contact face material has become badly worn. To avoid misalignment and uneven contact pressure always replace contacts in complete sets.

Vacuum Contactors

Contacts of vacuum contactors are not visible, so contact wear must be checked indirectly. Vacuum bottles must be replaced when:

- The contactor wear indicator line shows need for replacement.
- The vacuum bottle integrity-tests show need for replacement.

Replace all vacuum bottles in the contactor simultaneously to avoid misalignment and uneven contact wear. If the vacuum battles do not require replacement, check and adjust over-travel to the value listed in the product user manual.

Power Cable and Control Wire Terminals

A loose connection in a power circuit can cause overheating that can lead to equipment malfunction or failure. A loose connection in a control circuit can cause control malfunctions. Loose bonding or grounding connections can increase hazards of electrical shock and contribute to electromagnetic interference (EMI). Check the tightness of all terminals and bus bar connections and tighten any loose connections. Replace any parts or wiring that is damaged by overheating, and any broken wires or the bonding straps. See the User Manual for torque values that are required for power cable and bus hardware connections.

Coils

If a coil exhibits evidence of overheating (cracked, melted or burned insulation), it must be replaced. In that event, check for and correct overvoltage or undervoltage conditions, which can cause coil failure. Be sure to clean any residue of melted coil insulation from other parts of the device or replace such parts.

Batteries

Replace batteries periodically as specified in product manual or if a battery shows signs of electrolyte leakage. Use tools to handle batteries that have leaked electrolyte; most electrolytes are corrosive and can cause burns. Dispose of the old battery in accordance with instructions that are supplied with the new battery or as specified in the product manual.

Pilot Lights

Replace any burned out lamps or damaged lenses. Do not use solvents or cleaning- agents on the lenses.

Solid-state Devices

ATTENTION: Use of unrecommended test equipment for solid-state controls can result in damage to the control or test equipment or unintended actuation of the controlled equipment. See paragraph titled HIGH VOLTAGE TESTING.

Solid-state devices require a periodic visual inspection. Discolored, charred, or burned components can indicate the need to replace the component or circuit board. Replacements must be made only at the Personal Computer board or plug-in component level. Inspect printed circuit boards to determine that they are properly seated in the edge board connectors. Board locking tabs must also be in place. Solid-state devices must also be protected from contamination, and provisions for cooling must be maintained – see Contamination on page 157 and Cooling-fans on page 158. Do not use solvents on printed circuit boards.

Locking and Interlocking Devices

Check these devices for proper working-condition and capability of performing their intended functions. Make any necessary replacements only with Allen-Bradley® renewal parts or kits. Adjust or repair only in accordance with Allen-Bradley instructions found in the product user manuals.

PowerFlex 7000 Drive Spare Part Storage Requirements and Recommendations

Overview

If equipment containing electrolytic capacitors (for example, power supplies) is stored (unpowered) under normal storage temperatures and conditions, it can be kept for up to 15 years. After 15 years, the electrolyte inside of the capacitors dries because the rubber seals of the capacitor starts to deteriorate. During the storage period (of up to 15 years) it's required to maintain the electrolytic capacitors (to preserve the aluminum oxide dielectric).

To maintain the health of the electrolytic capacitors, the equipment must be energized annually.

Power Supplies

The following reconditioning procedures are applicable for the following components:

- Pioneer/Cosel power supply
- IGDPS
- IntelliVAC™ module
- Absopulse AC/DC converter
- Absopulse DC/DC converter

Energize the components with nominal input voltage for 1…2 hours every year of storage. If the power supplies were stored for a longer than three years without energizing, perform the reconditioning procedure as described below.

Reconditioning for AC/DC Power Supply

1. Connect the power supply through an AC autotransformer. The voltage range (120/240V) is adapted to the nominal voltage of the energized item.
2. Feed the power supply with 25% of the nominal voltage of the energized item for 15 minutes.
3. Increase voltage to 50% of the nominal voltage of the energized item, feed the power supply for another 15 minutes.
4. Increase voltage to 75% of the nominal voltage of the energized item, feed the power supply for another 15 minutes.
5. Increase voltage to 100% of nominal voltage of energized item, feed power supply for another 15 minutes.

Reconditioning for DC/DC power supply

1. Connect the power supply to a variable DC source with current limiting functionality (limit the current to 200 mA). The voltage range is adapted to nominal voltage of energized part.
2. Feed the power supply with 25% of the nominal voltage of the energized item for 15 minutes.

3. Increase voltage to 50% of the nominal voltage of the energized item, feed the power supply for another 15 minutes.
4. Increase voltage to 75% of the nominal voltage of the energized item, feed the power supply for another 15 minutes.
5. Increase voltage to 100% of the nominal voltage of the energized item, feed the power supply for another 15 minutes.

1606 Power Supply

If an average storage temperature of 25 °C (77 °F) is maintained, energize the power supply for approximately 10 minutes with nominal input voltage.

With adequate storage temperatures, this procedure should be performed at least every five years. At higher temperatures, this procedure should be performed every three years.

UPS Batteries

If the batteries are stored for a long period, recharge then every 6 months by connecting the UPS to utility power. The internal batteries charge to 90% capacity in less than 3 hours.

However, the UPS manufacturer recommends that the batteries charge for 48 hours after long-term storage. Check the battery recharge date on the shipping carton label.

ATTENTION: If the recharge date has passed and the batteries were never recharged, do not use them.

Control Equipment and Boards

Energize control equipment up once per year to achieve power supply capacitor integrity.

- Power up the ACB board once a year
- Replace the lithium battery in the DPM every 3 years

SGCT/SCR/SPS

Energize with nominal input voltage for 1…2 hours every year of storage.

To energize these components:

SGCT

- Use the AC power source, PS1, and IGDPS power supplies to power up the SGCT boards.
- Alternatively, use a variable DC source with current limiting functionality and the IGDPS power supplies.
- Or, use the assembly of variable AC power source (120V or 240V), SPS, and SPS wire harness that are provided with the drive.

SPGDB

- Use a variable DC power source with current limiting functionality.

SPS

- Use an assembly of variable AC power source (120V or 240V) and provided with the drive SPS wire harness.

If the boards were not energized for longer than 3 years, perform the following reconditioning procedures:

- SGCT
  - Apply 20V DC voltage (from an IGDPS or a variable DC power source) through a current limiting resistor (around 300 Ohms/1 Watt minimum) for one hour.
- SPGDB
  - Apply 20V DC voltage (from an IGDPS or a variable DC power source) through a current limiting resistor (around 300 Ohms/1 Watt minimum) for a period of one hour.

Cooling Fans

Rotated by hand (10…20 spins) every 3 months to ensure circulation of lubricant in bearings and to help prevent brinelling of the bearings.

Signal Conditioners

These components have a 3 year lifetime storage period.

Spare Parts Maintenance Schedule

Use the following table to determine the appropriate action per the spare parts maintenance schedule below.

Ch	Charging	This indicates that the component should be charged to maintain component integrity.
E	Energizing	This indicates that the component should be energized to maintain component integrity.
R	Recondition/ Reforming	This indicates that the component should be reconditioned/reformed to maintain component integrity.
Re	Replacement	This indicates that the component has reached its mean storage life, and should be replaced.
Ro	Rotating	This indicates that the component should be rotated to maintain component integrity.

Component Type		Period Interval (Months)																			
		3	**6**	**9**	**12**	**15**	**18**	**21**	**24**	**27**	**30**	**33**	**36**	**39**	**42**	**45**	**48**	**51**	**54**	**57**	**60**
Power Supplies	Pioneer/Cosel power supply	–	–	–	E	–	–	–	E	–	–	–	E/R(1)	–	–	–	E	–	–	–	E
	IGDPS	–	–	–	E	–	–	–	E	–	–	–	E/R(1)	–	–	–	E	–	–	–	E
	IntelliVAC module	–	–	–	E	–	–	–	E	–	–	–	E/R(1)	–	–	–	E	–	–	–	E
	Absopulse AC/DC Conv.	–	–	–	E	–	–	–	E	–	–	–	E/R(1)	–	–	–	E	–	–	–	E
	Absopulse DC/DC Conv.	–	–	–	E	–	–	–	E	–	–	–	E/R(1)	–	–	–	E	–	–	–	E
	1606 Power Supply	–	–	–	-	–	–	–	-	–	–	–	E(2)	–	–	–	–	–	–	–	E(2)
	UPS battery	–	Ch	–	Ch	–	Ch	–	Ch	–	Ch	–	Ch	–	Ch	–	Ch	–	Ch	–	Re
Control Equipment and Boards	ACB	–	–	–	E	–	–	–	E	–	–	–	E	–	–	–	E	–	–	–	E
	Lithium battery for DPM	–	–	–	–	–	–	–	–	–	–	–	Re	–	–	–	-	–	–	–	-
Power Components	SGCT	–	–	–	E	–	–	–	E	–	–	–	E/R(1)	–	–	–	E	–	–	–	E
	SCR SPGDB	–	–	–	E	–	–	–	E	–	–	–	E/R(1)	–	–	–	E	–	–	–	E
	SPS board	–	–	–	E	–	–	–	E	–	–	–	E/R(1)	–	–	–	E	–	–	–	E
Air-cooling system	Cooling fans	Ro	Ro	Ro	Ro	Ro	Ro	Ro	Ro	Ro	Ro	Ro	Ro	Ro	Ro	Ro	Ro	Ro	Ro	Ro	Ro
Additional Devices	Signal conditioner	–	–	–	–	–	–	–	–	–	–	–	Re	–	–	–	–	–	–	–	–

Component Type		Period Interval (Months)																			
		63	**66**	**69**	**72**	**75**	**78**	**81**	**84**	**87**	**90**	**93**	**96**	**99**	**102**	**105**	**108**	**111**	**114**	**117**	**120**
Power Supplies	Pioneer/Cosel power supply	–	–	–	E/R(1)	–	–	–	E	–	–	–	E	–	–	–	E/R(1)	–	–	–	E
	IGDPS board	–	–	–	E/R(1)	–	–	–	E	–	–	–	E	–	–	–	E/R(1)	–	–	–	E
	IntelliVAC module	–	–	–	E/R(1)	–	–	–	E	–	–	–	E	–	–	–	E/R(1)	–	–	–	E
	Absopulse AC/DC Conv.	–	–	–	E/R(1)	–	–	–	E	–	–	–	E	–	–	–	E/R(1)	–	–	–	E
	Absopulse DC/DC Conv.	–	–	–	E/R(1)	–	–	–	E	–	–	–	E	–	–	–	E/R(1)	–	–	–	E
	1606 Power Supply	–	–	–	E(2)	–	–	–	–	–	–	–	–	–	–	–	E(2)	–	–	–	E(2)
	UPS battery	–	Ch	–	Ch	–	Ch	–	Ch	–	Ch	–	Ch	–	Ch	–	Ch	–	Ch	–	Re
Control equipment and boards	ACB	–	–	–	E	–	–	–	E	–	–	–	E	–	–	–	E	–	–	–	E
	Lithium battery for DPM	–	–	–	Re	–	–	–	-	–	–	–	-	–	–	–	Re	–	–	–	–
Power Components	SGCT	–	–	–	E/R(1)	–	–	–	E	–	–	–	E	–	–	–	E/R(1)	–	–	–	E
	SCR SPGDB	–	–	–	E/R(1)	–	–	–	E	–	–	–	E	–	–	–	E/R(1)	–	–	–	E
	SPS board	–	–	–	E/R(1)	–	–	–	E	–	–	–	E	–	–	–	E/R(1)	–	–	–	E
Air-cooling system	Cooling fans	Ro	Ro	Ro	Ro	Ro	Ro	Ro	Ro	Ro	Ro	Ro	Ro	Ro	Ro	Ro	Ro	Ro	Ro	Ro	Ro
Additional devices	Signal conditioner	–	–	–	Re	–	–	–	–	–	–	–	–	–	–	–	Re	–	–	–	–

(1) Recommended energizing item up for 1...2 hours every year of storage. If the item was stored for a longer time without energizing (longer than 3 years), then the reconditioning procedure must be applied.
(2) With an average storage temperature of 25 °C (77 °F) the energizing procedure should be performed at least every five years, and at higher temperatures every three years.

Spare Parts Connection Matrix

Use this matrix to determine the appropriate supporting device for each component type.

Table 13 - Spare Parts Connection Matrix

Component Category	Component/Item	Supporting Device[1]									
		Variable AC Source (120/240V)	Variable DC Source with Current Limiting Function	PowerFlex 7000 Power Supply 1 (Pioneer/Cosel)	IGDPS Board	SPS Board	SPS Wire Harness	2 Pole Connector 80174-014-01-R	3 Pole Connector 80174-014-02-R	2 Pole Euro Style Plug 80026-131-10	AC Autotransformer (120/240V)[2]
Power Supplies	Pioneer/Cosel power supply	✓	–	–	–	–	–	–	–	–	✓
	IGDPS board	–	✓	–	–	–	–	✓	–	–	–
	IntelliVAC module[3]	✓	✓	–	–	–	–	–	–	–	✓
	Absopulse AC/DC Conv.	✓	–	–	–	–	–	–	–	–	✓
	Absopulse DC/DC Conv.	–	✓	–	–	–	–	–	–	–	–
	1606 power supply	✓	–	–	–	–	–	–	–	–	✓
Control equipment and Boards	ACB board	–	✓	–	–	–	–	–	–	✓	–
Power Components	SGCT[4]	✓	✓	✓	✓	✓	✓	–	–	–	–
	SCR SPGDB[4]	–	✓	–	–	–	–	–	✓	–	–
	SPS board	✓	–	–	–	–	✓	–	–	–	✓

(1) The nominal voltage of supporting device/s must be adapted to nominal voltage of energized item.
(2) The AC transformer is used only for the reconditioning procedure instead of variable AC source.
(3) The IntelliVAC module can be energized with AC or DC input voltage.
(4) Energize the SGCT boards using one of the methods below.
a. Assembly of AC power source, PowerFlex 7000 PS1 and IGDPS power supply.
b. Assembly of variable DC power source with current limiting function, SPS board, and wire harness provided with the drive.

Power Supply Connection Guidelines

Pioneer/Cosel Power Supply

1. Connect the AC source to the AC input terminals of Pioneer/Cosel power supply via 13 A circuit breaker.
2. Use 10 AWG (5.3 mm^2) wire to connect the devices.

Figure 119 - Pioneer/Cosel Power Supply

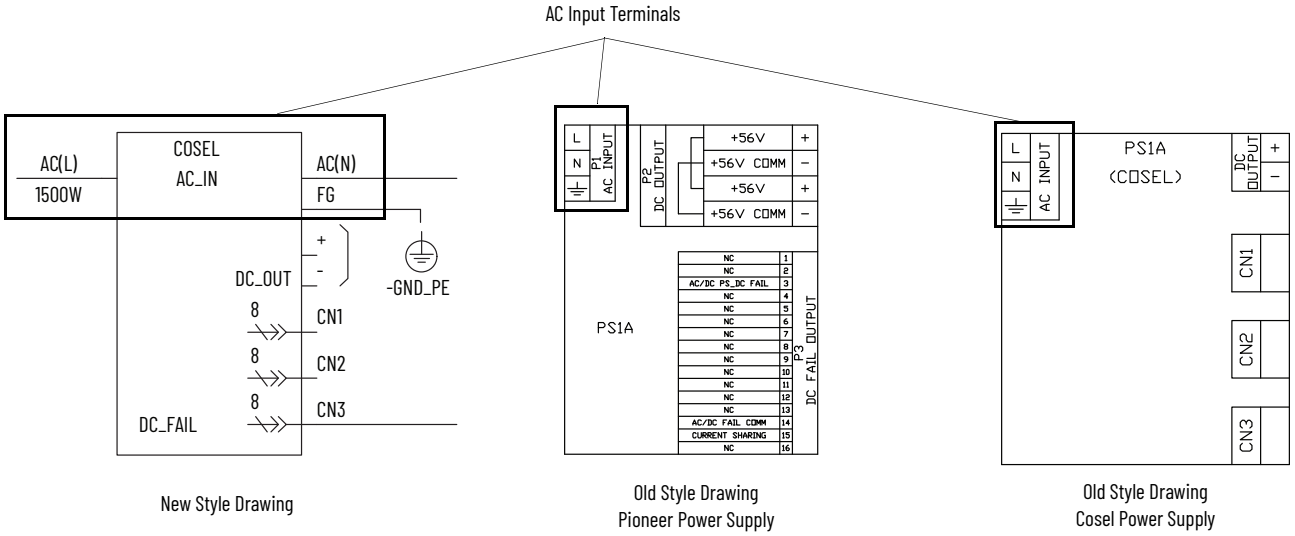

IGDPS

There are two methods to connect the IGDPS.

First Method

1. Connect the variable DC source with current limiting function (56V DC/200mA) to the DC input terminals of IGDPS.
2. Use 14 AWG (2.1 mm^2 wire) to connect the devices.

Second Method

1. Connect the AC source to the AC input terminals of Pioneer/Cosel power supply via 13 A circuit breaker.
2. Connect the Pioneer/Cosel power supply 56V DC output terminals to the DC input terminals of IGDPS.
3. Use 14 AWG (2.1 mm^2 wire) to connect the devices.

Figure 120 - IGDPS

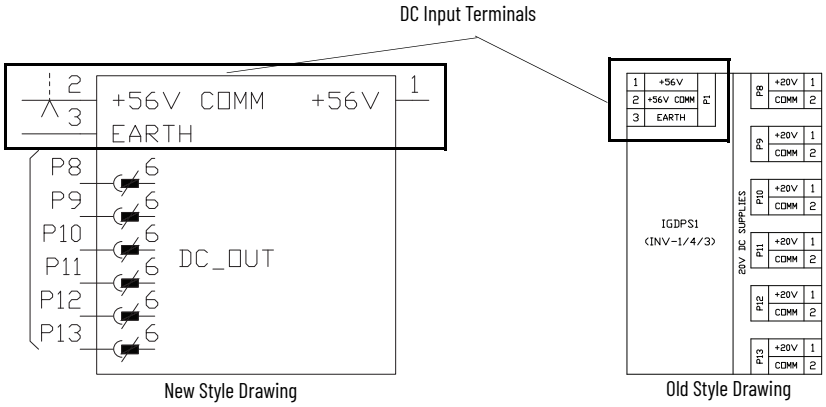

IntelliVAC Control Module

1. Connect the AC or DC source (120...240V) to the power input terminals of IntelliVAC control module via 2 A circuit breaker.
2. Use 12 AWG (3.3 mm^2) wire to connect the devices.

Figure 121 - IntelliVAC Control Module

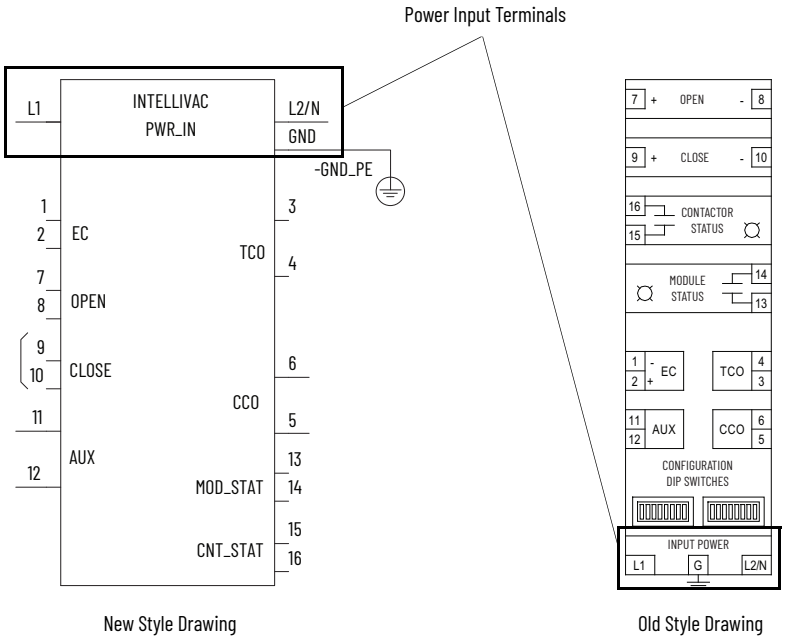

Absopulse AC/DC Converter

1. Connect the AC source to the AC input terminals of Absopulse AC/DC converter.
2. Use 12 AWG (3.3 mm^2) wire to connect the devices.

Figure 122 - Absopulse AC/DC Converter

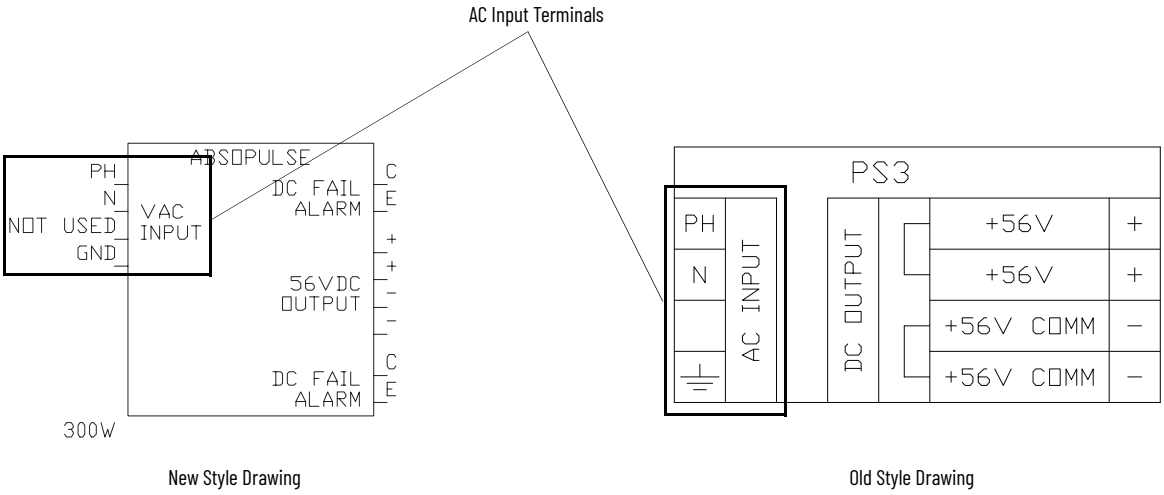

Absopulse DC/DC Converter

There are two methods to connect the Absopulse DC/DC converter.

First Method

1. Connect the variable DC source with current limiting function (56V DC/200mA) to the DC input terminals of DC/DC converter.
2. Use 12 AWG (3.3 mm^2) wire to connect the devices.

Second Method

1. Connect the AC source to the AC input terminals of Pioneer/Cosel power supply via 13 A circuit breaker
2. Connect the Pioneer/Cosel power supply 56V DC output terminals to the DC input terminals of DC/DC converter.
3. Use 12 AWG (3.3 mm^2) wire to connect the devices.

Figure 123 - Absopulse DC/DC Converter

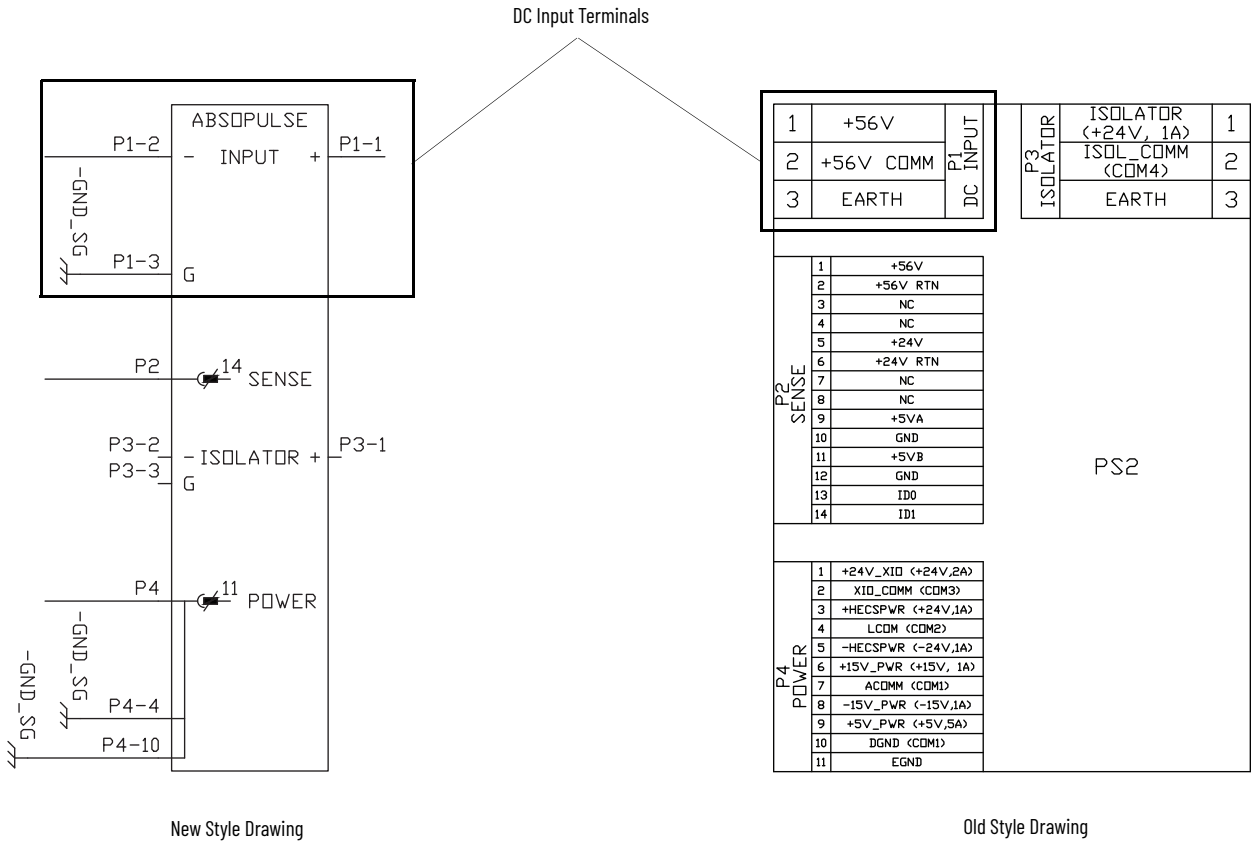

1606 Power Supply

1. Connect the variable AC source to the AC input terminals of 1606 power supply via 2 circuit breaker.
2. Use 12 AWG (3.3 mm^2) wire to connect the devices.

Figure 124 - 1606 Power Supply

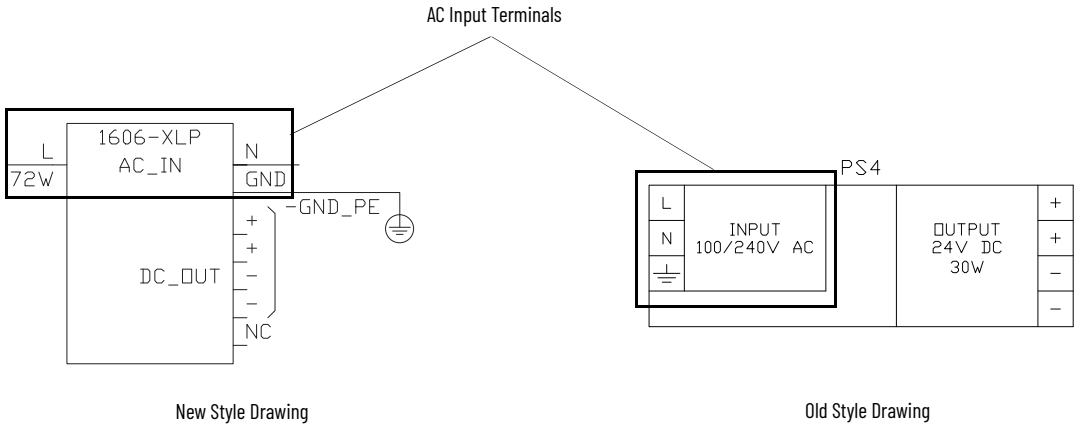

Control Equipment and Boards Connection Guidelines

Analog Control Board (ACB)

1. Connect the variable DC source with current limiting function (5V DC/ 200mA) to the +5V and DGND pin to the +5V pin of ACB DC input connector J13.
2. Use 18 AWG (0.8 mm^2) wire to connect the devices.

Figure 125 - Analog Control Board

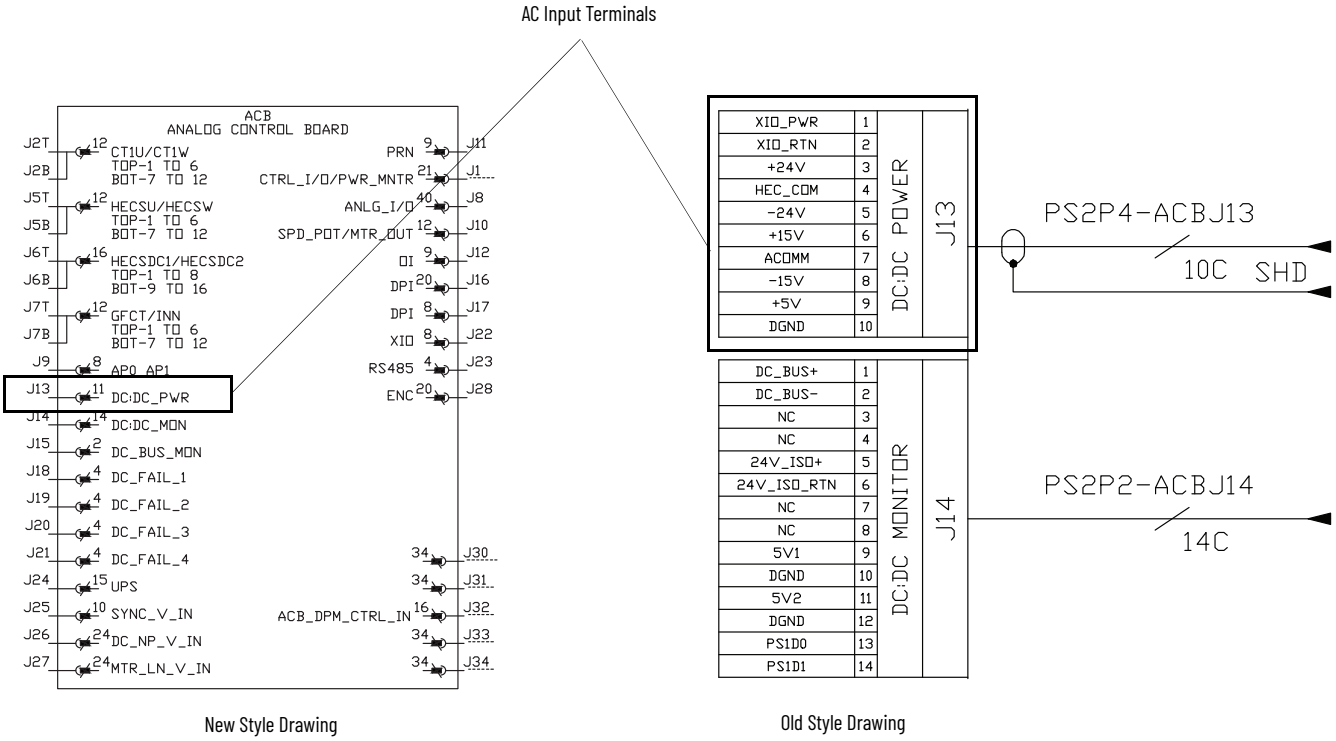

Power Components Connection Guidelines

SGCT - IGDPS

There are two connection methods for the IGDPS.

First Method

1. Connect the AC source to the AC input terminals of Pioneer/Cosel power supply via 13 A circuit breaker.
2. Connect the Pioneer/Cosel power supply 56V DC output terminals to the DC input terminals of IGDPS.
3. Connect the IGDPS 20V DC output terminals with SGCT DC input terminals.
4. Use 12 AWG (3.3 mm^2) wire to connect the power supply devices.
5. Use 16 AWG (1.3 mm^2) to connect the IGDPS with SGCT.

Second Method

1. Connect the variable DC source with current limiting function (56V DC/200mA) to the 56V DC input terminals of IGDPS.
2. Connect the IGDPS 20V DC output terminals with SGCT DC input terminals.
3. Use #14 AWG (2.1 mm^2)wire to connect the DC source with IGDPS.
4. Use #16 AWG (1.3 mm^2) to connect the IGDPS with SGCT.

Figure 126 - IGDPS

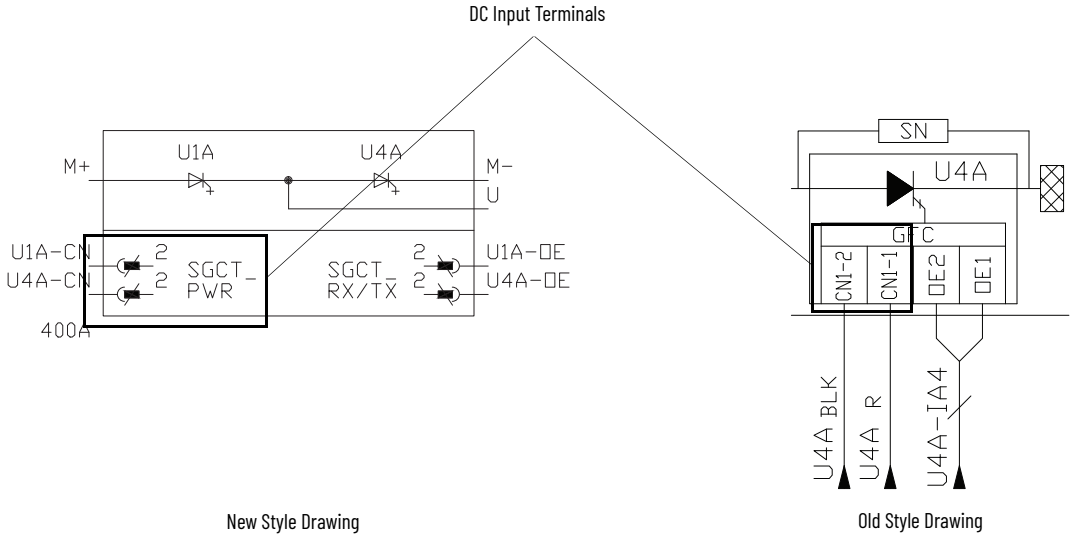

SGCT – SPS Board

1. Connect the variable AC power source 120V or 240V to the test plug of the SPS board.
2. Connect the SPS DC output terminals with the DC input terminals of SGCT.
3. Connect the AC power source to the SPS board using the SPS wire harness.
4. Use 16 AWG/1.3 mm^2 to connect the SPS with SGCT board.

Figure 127 - SGCT - SPS Board

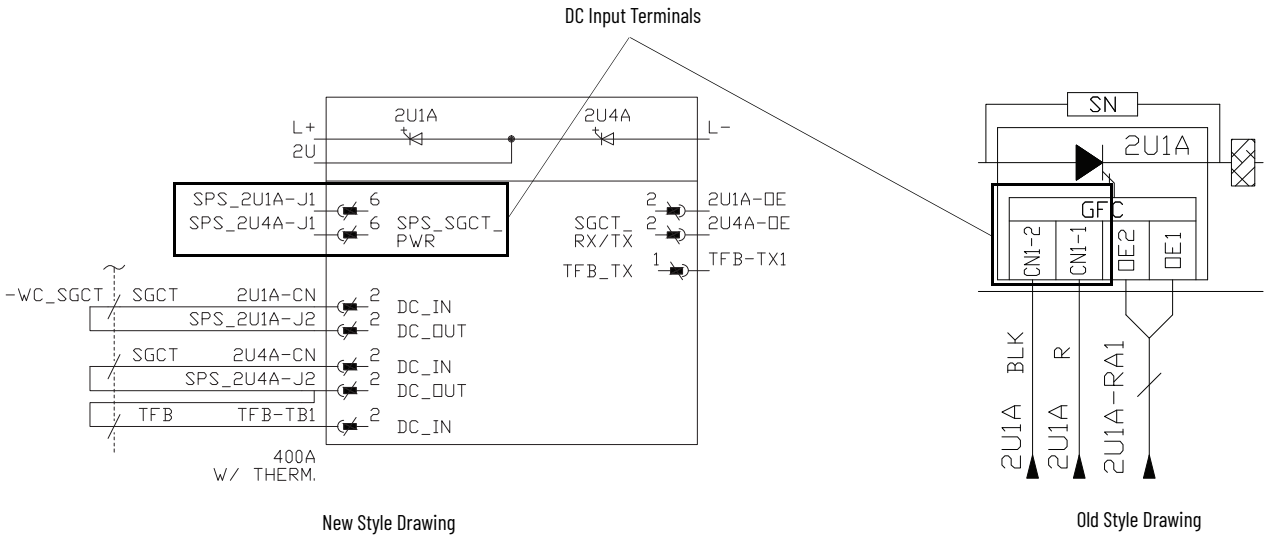

SPS Board

1. Connect the AC source 120V or 240V to the test plug of SPS board.
2. Use SPS wire harness provided with the drive to connect the SPS with AC source.

Figure 128 - SPS Board

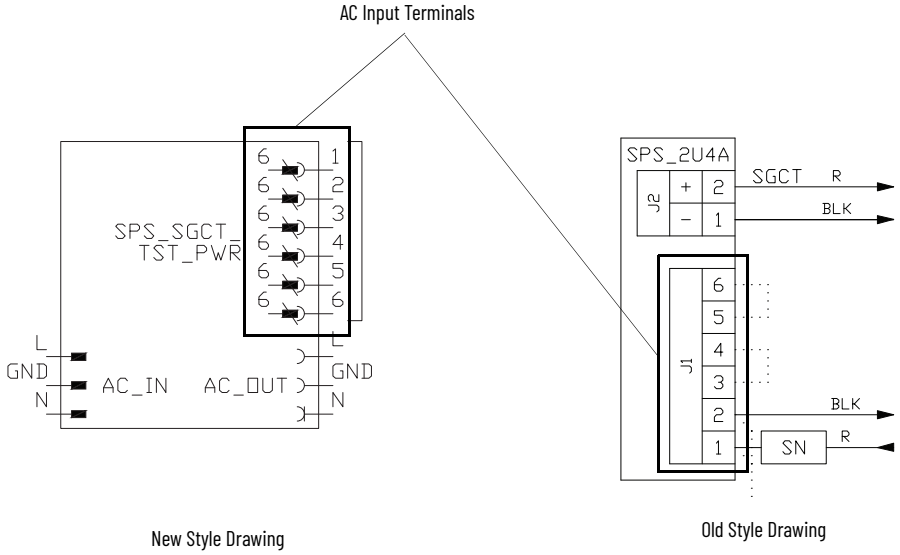

SCR - SPGDB

1. Connect the variable DC source with current limiting function (20V DC/100mA) to the test plug.
2. Use 14 AWG (2.1 mm^2) wire to connect the devices.

Figure 129 - SCR - SPGDB

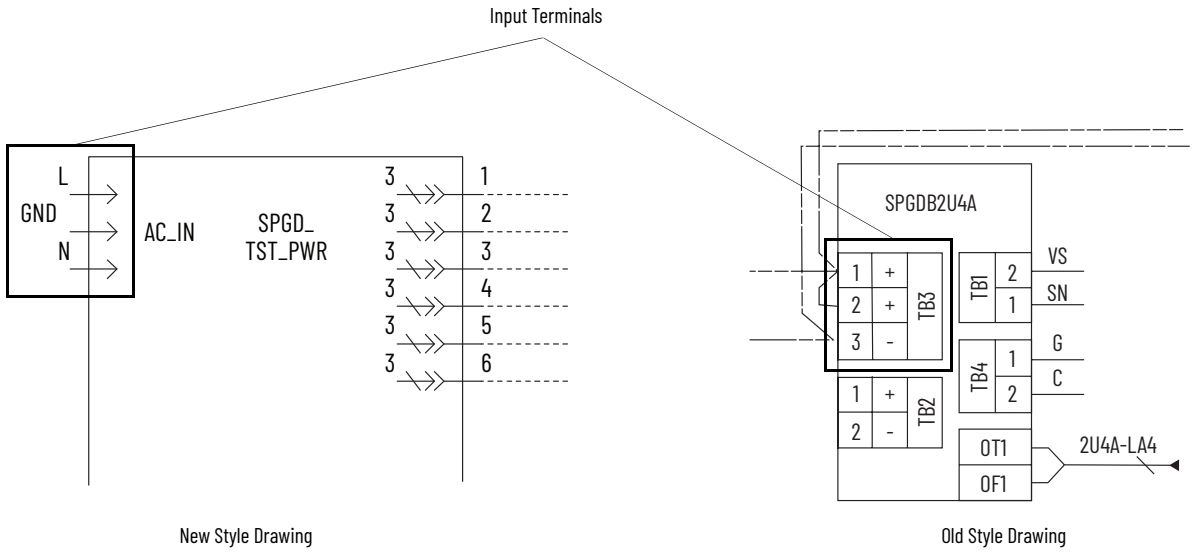

Connection Wires Size

Table 14 - PowerFlex 7000 Drive Connection Wire Sizes

AWG orMCM	Diameter (in.)	Diameter (mm)	Cross-SectionalArea (mm^2)
750	0.8660	22.00	380.031
700	0.8370	21.25	354.695
600	0.7750	19.67	304.025
500	0.7070	17.96	253.354
450	0.6710	17.04	228.018
400	0.6320	16.06	202.683
350	0.5920	15.03	177.348
300	0.5480	13.91	152.012
250	0.5000	12.70	126.677
0000 (4/0)	0.4600	11.68	107.160
000 (3/0)	0.4096	10.40	84.970
00 (2/0)	0.3648	9.27	67.400
0 (1/0)	0.3249	8.25	53.460
1	0.2893	7.35	42.390
2	0.2576	6.54	33.610
3	0.2294	5.83	26.650
4	0.2043	5.19	21.140
5	0.1819	4.62	16.760
6	0.1620	4.11	13.290
7	0.1443	3.67	10.550
8	0.1285	3.26	8.360
9	0.1144	2.91	6.630
10	0.1019	2.59	5.260
11	0.0907	2.30	4.170
12	0.0808	2.05	3.310
13	0.0720	1.83	2.630
14	0.0641	1.63	2.080
15	0.0571	1.45	1.650
16	0.0508	1.29	1.310
17	0.0453	1.15	1.040
18	0.0403	1.02	0.820
19	0.0359	0.91	0.650
20	0.0320	0.81	0.520
21	0.0285	0.72	0.410
22	0.0254	0.65	0.330
23	0.0226	0.57	0.260
24	0.0201	0.51	0.200
25	0.0179	0.45	0.160
26	0.0159	0.40	0.130

Notes:

Torque Requirements

Torque Requirements for Threaded Fasteners

Unless otherwise specified, use these values of torque to maintain the equipment.

Table 15 - Torque Requirements

Diameter	Pitch	Material	Torque (N•m)	Torque (lb•ft)
M2.5	0.45	Steel	0.43	0.32
M4	0.70	Steel	1.8	1.3
M5	0.80	Steel	3.4	2.5
M6	1.00	Steel	6.0	4.4
M8	1.25	Steel	14	11
M10	1.50	Steel	29	21
M12	1.75	Steel	50	37
M14	2.00	Steel	81	60
¼ in.	20	Steel S.A.E. 5	12	9.0
3/8 in.	16	Steel S.A.E. 2	27	20

Notes:

Insulation Resistance Testing

Drive Insulation Resistance Testing

When a ground fault occurs, there are three zones in which the problem can appear: input to the drive, the drive, and output to the motor. The ground fault condition indicates that a phase conductor has found a path to ground. A current with a magnitude that ranges from leakage to fault level exists that is dependent on the resistance of the path to ground. The drive itself rarely is a source of a ground fault when it is properly installed. Ground fault problems that are associated with the drive rarely occur. Normally the source of the fault exists in either the input or output zone.

Since the procedure for insulation resistance testing the drive is more complex, is recommended to first insulation resistance test the input and output zones when encountering a ground fault. If the location of the ground fault cannot be located outside the drive, insulation resistance test the drive.

ATTENTION: Insulation resistance testing the drive must be performed with due care as the hazards to drive exist if safety precautions are not followed. The Insulation Resistance Testing Procedures apply high voltage to ground. All control boards in the drive are grounded and if not isolated, the high potential that is applied to them can cause immediate damage.

ATTENTION: Use caution when performing an insulation resistance test. High-voltage testing is potentially hazardous and can cause severe burns, injury, or death. Where appropriate, connect the test equipment to Ground.

Check that the insulation levels before power equipment is energized. Insulation resistance tests provide a resistance measurement from the phase-to-phase and phase-to-ground by applying a high voltage to the power circuitry. Perform this test to detect Ground faults without damaging any drive equipment.

Remove (temporarily) any existing paths to ground that are necessary for normal operation of the drive, and all connected equipment to a high potential while measuring the leakage current to ground.

ATTENTION: There are risks of serious or fatal injury to personnel if you do not follow safety guidelines.

Insulation Resistance Testing Procedures

To perform insulation resistance testing tests on the PowerFlex® 7000A, follow this procedure.

ATTENTION: Failure to comply with this procedure can result in a poor insulation resistance test reading and damage to drive control boards.

Required equipment

- Torque wrench and 10 mm socket
- Phillips screwdriver
- 2500/5000V insulation resistance tester.

1. Isolate and lockout the drive system from any high-voltage source.
   a. Disconnect any incoming power sources.
   b. Isolate and lockout medium-voltage sources.
   c. Turn off all control power sources at their respective circuit breakers.
   d. Verify with a potential indicator that power sources are disconnected, and that the control power in the drive is de-energized.
2. Isolate the power circuit from system ground ("float the drive").

   Remove the grounds on these components within the drive (refer to the electrical schematics provided with the equipment to determine the points to disconnect):
   - Voltage Sensing Boards (VSB)
   - Output Grounding Network (OGN)

Voltage Sensing Boards

3. Remove all ground connections, at the screw terminals on the VSB, from all VSBs in the drive. There are two grounds on each board marked "GND 1", and "GND 2".

ATTENTION: Disconnect the terminals on the boards rather than from the ground bus as the grounding cable is only rated for 600V. The Injection of a high voltage on the ground cable degrades the cable insulation. Do not disconnect the white medium-voltage wires from the VSBs. They must be included in the test.

The number of VSBs installed in each drive varies depending on the drive configuration.

Disconnect Output Grounding Network

4. Remove the ground connection on the OGN (if installed). Lift this connection at the OGN capacitor rather than the grounding bus, as the grounding cable is only rated for 600V.

ATTENTION: The Injection of a high voltage on the ground cable during an insulation resistance test degrades the cable insulation.

5. Disconnect connections between power circuit and low voltage control.

Disconnect Voltage Sensing Boards

The connections between the low voltage control and the power circuit are made through ribbon cable connectors. The cables are plugged into connectors on the voltage sensing board that is marked “J1”, “J2”, and “J3”, and terminate on the signal conditioning boards. Every ribbon cable connection that is made on the VSBs is marked for identification.

6. Confirm the marking matches the connections, and disconnect the ribbon cables and move them clear of the VSB. If the ribbon cables are not removed from the VSB, then high potential applies directly to the low voltage control through the SCBs and damages those boards.

ATTENTION: The VSB ribbon cable insulation is not rated for the potential that is applied during an insulation resistance test. You must disconnect the ribbon cables at the VSB rather than the SCB to avoid exposing the ribbon cables to high potential.

Removing Potential Transformer Fuses

A insulation resistance test can exceed the rating of potential transformer fusing. To avoid damage:

7. Remove the primary fuses from all potential and control power transformers in the system. This step removes a path from the power circuit back to the drive control.

Isolate Transient Suppression Network

A path to ground exists through the TSN network as it has a ground connection that dissipates high energy surges in normal operation. This ground path must be isolated. If this ground connection is not isolated, the insulation resistance test indicates a high leakage current through this path and falsely indicates a problem in the drive.

8. Remove all fuses on the TSN before proceeding with the insulation resistance test.

Surge Arrestors

Drives that are supplied after 2009 have surge arrestors instead of a TSN. Surge arrestors can remain in the circuit during the insulation resistance test procedure.

9. Insulation resistance test the drive.
10. All three phases on the line and machine sides of the drive connect through the DC Link and snubber network. A test from any one of the input or output terminals to ground sufficiently tests the drive.

IMPORTANT Verify the drive and any connected equipment is clear of personnel and tools before starting the insulation resistance test. Barricade any open or exposed conductors. Conduct a walk-around inspection before commencing the test.

ATTENTION: Discharge the insulation resistance tester before it is disconnected from the equipment.

   a. Connect the insulation resistance tester to the drive. Follow the specific instructions for that drive model.
   b. If the insulation resistance tester has a lower voltage setting (normally 500V or 1000V), apply that voltage for 5 seconds. Do the test as a precursor for a higher voltage rating. If you forgot to remove any grounds, can limit the damage. If the reading is high, apply 5 kV from any drive input or output terminal to ground.
   c. Perform an insulation resistance test at 5 kV for 1 minute and record the result.

   The test readings must be greater than the minimum values listed in Table 16 on page 180.

Low Test Results

11. If the test results are lower than the listed values, segment the drive system into smaller components. Repeat the test on each segment until the source of the ground fault is identified.
    a. Isolate the line side of the drive from the machine side by removing the appropriate cables on the DC Link reactor.
    b. Isolate the DC Link reactor from the drive by disconnecting the four power cables.
    c. Verify that all electrical components being insulation resistance tested are electrically isolated from ground.

    Items that produce lower than expected readings are surge capacitors at the motor terminals and motor filter capacitors at the output of the drive. The insulation resistance testing procedure must follow a systematic segmentation of electrical components to isolate and locate a ground fault.

Table 16 - Test Readings

Type of Drive	Minimum Insulation Resistance Value
Liquid-cooled Drive	200 MΩ
Air-cooled Drive	1k MΩ
Drive with input/output Caps Disconnected	5k MΩ
Isolation Transformer	5k MΩ
Motor	5k MΩ

The motor filter capacitors and line filter capacitors (if applicable) can skew the insulation resistance test result as being lower than expected. The capacitors have internal discharge resistors that discharge the capacitors to ground. If the insulation resistance test results are skewed, disconnect the output capacitors.

IMPORTANT Humidity and dirty standoff insulators can cause leakage to ground because of tracking. Clean a 'dirty' drive before starting the insulation resistance test.

12. Reconnect connections between power circuit and low voltage control.

    Reconnect the ribbon cables “J1”, “J2” and “J3” in all VSBs. Do not cross the cable connections.

ATTENTION: Incorrect placement of the feedback cables can result in serious damage to the drive. Make sure that they are connected to the proper location

13. Reconnect the power circuit to the system ground.

Reconnect Voltage Sensing Boards

14. Reconnect the two ground conductors on the VSBs.

    The conductors provide a reference point for the VSB and enable the low voltage signal to be fed to the SCBs. If the ground conductors are not connected, the monitored low voltage signal rises to medium voltage potential, which is a serious hazard.

    Make sure that the ground conductors on the VSB are securely connected before applying medium voltage to the drive.

ATTENTION: Failure to connect both ground connections on the voltage sensing board can result in high potential in the low voltage cabinet within the drive. This result damages the drive control and can cause injury or death to personnel

Reconnect Output Grounding Network

15. Reconnect the ground connection on the OGN capacitor. Torque the bolt connection to 3.4 N•m (30 lb•in.). Do Not Exceed the torque rating of this connection as it can result in damage to the capacitor.

ATTENTION: Failure to reconnect the OGN ground can result in the neutral voltage offset being impressed on the motor cables and stator, which can result in equipment damage.

For drives that did not originally have the OGN connected (or installed), there is no need for concern.

Enable Transient Suppression Network

16. Reinstall the fuses on the TSN.

Notes:

Environmental Considerations

Air Quality Requirements

Air cleanliness for PowerFlex® 7000 drives is important for two reasons:

1. Airborne particulate that settles on heat sinks and heat-producing components increases the thermal resistance of the components. This resistance results in an increase in the temperature of the part. The internal fins of the hockey-puck thyristor heat sinks must be kept clean. The dust on the surface of the heat sinks interferes with the boundary layer airflow, which inhibits the cooling of the part.
2. Particulate can decrease the tracking insulation of electrical insulation materials within the drive. Electrically conductive dusts (such as coal dust and metallic dusts) can be severe. However other particulates such as cement dust, moist from high levels of ambient relative humidity, can prove destructive as well. Dusts that coat the low voltage circuit boards can cause failures too.

Air presented to the PowerFlex 7000 drive must be of a cleanliness expected in a typical industrial control room environment. The drive is intended to operate in conditions with no special precautions to minimize the presence of sand or dust, but not in close proximity to sand or dust sources. This is defined by IEC 60721[(a)] as being less than 0.2 mg/m^3 of dust.

If outside air does not meet the conditions described above (0.2 mg / m^3), the site air handling system must filter the air to ASHRAE (American Association of Heating, Refrigeration and Air-Conditioning Engineers) Standard 52.2 MERV 11 (Minimum Efficiency Reporting Value). This filtration eliminates from 65…80% of the particulate in Range 2 (1.0…3.0 µm) and 85% of the particulate in Range 3 (3.0…10.0 µm). This filter system must be cleaned or changed regularly.

This environment is accomplished by placing the drive in a pressurized room with adequate air conditioning to maintain the ambient temperature. The drive exhaust air is circulated within the control room. Five to ten percent cooled/heated and filtered make-up air is provided to keep the room pressurized.

Hazardous Materials

Environmental protection is a top priority for Rockwell Automation. The facility that manufactured this medium voltage drive operates an environmental management system that is certified to the requirements of ISO 14001. As part of this system, this product was reviewed in detail throughout the development process to make sure that environmentally inert materials were used wherever feasible. A final review has found this product to be substantially free of hazardous material.

(a) IEC 60721-3-3 "Classification of Environmental Conditions - Part 3: Classification of Groups of Environmental Parameters and their Severities - Section 3: Stationary Use at Weather Protected Locations".

Rockwell Automation is actively seeking alternatives to potentially hazardous materials for which no feasible alternatives exist today in the industry. In the interim, the following precautionary information is provided for your protection and for the protection of the environment. Contact the factory for any environmental information on any material in the drive or with any questions about environmental impact.

Capacitor Dielectric Fluid

The fluids that are used in the filter capacitors and the snubber capacitors are considered safe and are fully sealed within the capacitor housings. Environmental regulations typically do not restrict the shipping and the handling of this fluid. In the unlikely event that capacitor fluid leaks out, avoid ingestion or contact with skin or eyes as slight irritation could result. Rubber gloves are recommended for handling.

To clean up, soak into an absorbent material and discard into an emergency container, or, if significant leakage occurs, pump fluid directly into the container. Do not dispose into any drain or into the environment in general or into general landfill refuse. Dispose of according to local regulations. If of an entire capacitor is disposed of, the same disposal precautions must be taken.

Printed Circuit Boards

Printed circuit boards can contain lead in components and materials. Circuit boards must be disposed of according to local regulations and must not be disposed of with general landfill refuse.

Lithium Batteries

This drive contains four small lithium batteries. Three are mounted on the printed circuit boards and one is located in the PanelView™ user interface. Each battery contains less than 0.05 g of lithium, which is fully sealed within the batteries. Environmental regulations typically do not restrict the shipping and the handling of these batteries, however, lithium is considered a hazardous substance. Lithium batteries must be disposed of according to local regulations and must not be disposed of with general landfill refuse.

Chromate Plating

Some sheet steel and fasteners are plated with zinc and sealed with a chromate-based dip. Environmental regulations typically do not restrict the shipping and the handling of the chromate plated parts, however, chromate is considered a hazardous substance. Dispose of chromate plated parts according to local regulations, not with general landfill refuse.

In Case Of Fire

This drive is highly protected against arc faults and therefore unlikely the drive would be the cause of a fire. In addition, the materials in the drive are self-extinguishing (that is they cannot burn without a sustained external flame). If, however, the drive is subjected to a sustained fire from some other source, some of the polymer materials in the drive produce toxic gases. Individuals that are involved in the extinguishing of the fire or anyone near must wear a self-contained breathing apparatus to help protect against any inhalation of toxic gases.

Disposal

When disposing of the drive, it must be disassembled and separated into groups of recyclable material as much as possible (that is steel, copper, plastic, wire). Send these materials to local facilities for recycling. Follow all previously mentioned disposal precautions.

Notes:

Pre-Commissioning

Start-up Commissioning Services

Start-up is performed at the customer site. Rockwell Automation requests a minimum of four weeks notice to schedule each start-up.

The Rockwell Automation standard work hours are between 9:00 a.m. to 5:00 PM EST (8 hr/day) Monday through Friday, not including observed holidays. Additional work hours are available on a time and material basis.

Pre-Commissioning the Drive

Rockwell Automation manages the start-up service for each installed drive at the customer site. There are a number of tasks that must be completed before Rockwell Automation personnel are scheduled for drive commissioning. Rockwell Automation recommends the following:

1. A pre-installation meeting/conference call with the customer to review:
   - The Rockwell Automation Start-up Plan.
   - The Start-up Schedule.
   - The Drive installation requirements.
2. Inspect the mechanical and electrical devices of the drive.
3. Perform a tug test on all internal connections within the drive and verify wiring.
4. Verify critical mechanical connections for proper torque requirements.
5. Verify and adjust mechanical interlocks for permanent location.
6. Confirm that all inter-sectional wiring is connected properly.
7. Verify control wiring from any external control devices such as PLCs.
8. Confirm that the cooling system is operational.
9. Verify the proper phasing from the isolation transformer to the drive.
10. Confirm cabling of drive to motor, isolation transformer, and line feed.
11. Collect test reports that indicate the insulation resistance/hipot test has been performed on line and motor cables.
12. Control power checks to verify all system inputs such as starts/stops, faults, and other remote inputs.
13. Apply medium voltage to the drive and perform operational checks.
14. Bump motor and tune drive to the system attributes. If the load is unable to handle any movement in the reverse direction, uncouple the load before bumping the motor for a directional test.
15. Verify proper performance, run the drive motor system throughout the operational ranges.

Customer personnel are required on-site to participate in the start-up of the system.

Notes:

History of Changes

This appendix contains the new or updated information for each revision of this publication. These lists include substantive updates only and are not intended to reflect all changes. Translated versions are not always available for each revision.

7000A-UM200H-EN-P - April 2022

Change
Removed the following sections: • Technical specifications • Catalog number explanation • Line and load cable sizes • Cable considerations These sections moved to PowerFlex 7000 Medium Voltage AC Drives Technical Data, publication 7000-TD010.
Updated operator interface section to account for eHIM
Added appendix detailing spare part storage requirements

7000A-UM200G-EN-P - February 2020

Change
Added warning for motor filter capacitors and indicative fault codes
Changed input frequency to ±5%

Notes:

T

U

V

X

Notes:

Rockwell Automation Support

Use these resources to access support information.

Technical Support Center	Find help with how-to videos, FAQs, chat, user forums, Knowledgebase, and product notification updates.	rok.auto/support
Local Technical Support Phone Numbers	Locate the telephone number for your country.	rok.auto/phonesupport
Technical Documentation Center	Quickly access and download technical specifications, installation instructions, and user manuals.	rok.auto/techdocs
Literature Library	Find installation instructions, manuals, brochures, and technical data publications.	rok.auto/literature
Product Compatibility and Download Center (PCDC)	Download firmware, associated files (such as AOP, EDS, and DTM), and access product release notes.	rok.auto/pcdc

Documentation Feedback

Your comments help us serve your documentation needs better. If you have any suggestions on how to improve our content, complete the form at rok.auto/docfeedback.

Waste Electrical and Electronic Equipment (WEEE)

At the end of life, this equipment should be collected separately from any unsorted municipal waste.

Rockwell Automation maintains current product environmental compliance information on its website at rok.auto/pec.

Rockwell Otomasyon Ticaret A.Ş. Kar Plaza İş Merkezi E Blok Kat:6 34752, İçerenköy, İstanbul, Tel: +90 (216) 5698400 EEE Yönetmeliğine Uygundur

Connect with us.

rockwellautomation.com — expanding **human possibility**®

AMERICAS: Rockwell Automation, 1201 South Second Street, Milwaukee, WI 53204-2496 USA, Tel: (1) 414.382.2000, Fax: (1) 414.382.4444
EUROPE/MIDDLE EAST/AFRICA: Rockwell Automation NV, Pegasus Park, De Kleetlaan 12a, 1831 Diegem, Belgium, Tel: (32) 2663 0600, Fax: (32) 2 663 0640
ASIA PACIFIC: Rockwell Automation SEA Pte Ltd, 2 Corporation Road, #04-05, Main Lobby, Corporation Place, Singapore 618494, Tel: (65) 6510 6608, FAX: (65) 6510 6699
UNITED KINGDOM: Rockwell Automation Ltd., Pitfield, Kiln Farm, Milton Keynes, MK11 3DR, United Kingdom, Tel: (44)(1908) 838-800, Fax: (44)(1908) 261-917

Publication 7000A-UM200I-EN-P - October 2023
Supersedes Publication 7000A-UM200H-EN-P - April 2022