USER MANUAL

LISTEN.
THINK.
SOLVE.®

BULLETIN 2030
ElectroGuard® Safety Isolation System

Allen-Bradley • Rockwell Software

Rockwell Automation

Important User Information

Because of the variety of uses for the products described in this publication, those responsible for the application and use of this control equipment must satisfy themselves that all necessary steps have been taken to assure that each application and use meets all performance and safety requirements, including any applicable laws, regulations, codes, and standards.

The figures, charts, sample programs, and layout examples shown in this guide are intended solely for purposes of example. Since there are many variables and requirements associated with any particular installation, Rockwell Automation does not assume responsibility or liability (to include intellectual property liability) for actual use based upon the examples shown in this publication.

Allen-Bradley Publication SGI-1.1, *Safety Guidelines for the Application, Installation, and Maintenance of Solid-State Control* (available from your local Allen-Bradley distributor) describes some important differences between solid-state equipment and electromechanical devices that should be taken into consideration when applying products such as those described in this publication.

Reproduction of the contents of this copyrighted publication, in whole or part, without written permission of Rockwell Automation, is prohibited.

Throughout this manual we use notes to make you aware of safety considerations:

ATTENTION

Identifies information about practices or circumstances that can lead to personal injury or death, property damage, or economic loss

Attention statements help you to:

- Identify a hazard
- Avoid a hazard
- Recognize the consequences

IMPORTANT

Identifies information that is critical for successful application and understanding of the product.

Product Safety Labels

The following Product Safety Labels identify information about practices or circumstances that can lead to personal injury or death, property damage, or economic loss.

Figure 0.1 Hazardous Voltage, Part Number. 31035-090-01

Figure 0.2 Hazardous Voltage Part Number. 31035-091-01

Figure 0.3 Pneumatic Energy Present Part Number. 31035-092-01

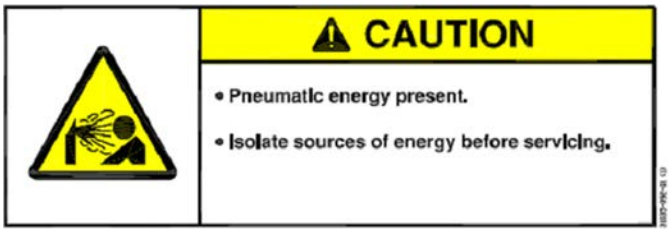

Figure 0.4 Heavy Object Part Number. 31035-093-01

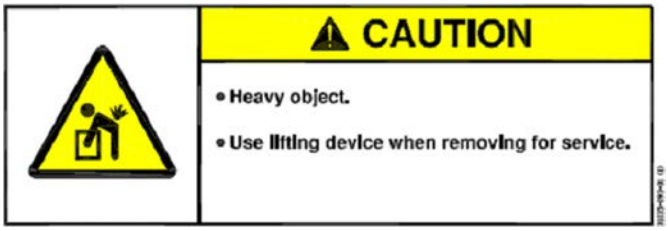

Figure 0.5 Heavy Object Part Number. 31035-094-01

Chapter 1 — Product Overview

Purpose of the Safety Isolation System 1-1
Safety Requirements and Guidelines 1-1
Description of Use 1-2
Application 1-2
Operation 1-3
Sequence of Isolation Operation 1-4
Typical Safety Isolation System Layout 1-5

Chapter 2 — Installation and Wiring

Pre-Installation Precautions 2-1
Power Fuses or Circuit Breaker Requirements 2-2
Dimensions 2-4
Approximate Weights 2-25
Receiving the ElectroGuard® Power Panel and Modules 2-26
Storing the ElectroGuard® Power Panel and Modules 2-26
ElectroGuard® Power Panel 2-26
Remote Lockout Station 2-28
Verification Module (Optional) 2-30
Expansion Module (Optional) 2-31
Pneumatic Isolation Module (Optional) 2-32
Installation and Wiring of the ElectroGuard® Power Panel 2-34
Overview 2-34
Installation of the Power Panel 2-34
Incoming and Outgoing Three-phase Cable Specifications . . . 2-36
Wiring of the Power Panel 2-36
Installation and Wiring of the ElectroGuard® Control Module . . . 2-45
Overview 2-45
Wiring the Remote Lockout Stations to the Control Module (RLS1…RLS6 Connectors) 2-49
Wiring the Control Module with Pneumatic Ready Option . . . 2-50
Wiring the Control Module with Time Delay Option (IP1 or FB1 Drive Control Stop Connector) 2-51
Wiring the RLS and System Status Signals (IP2 connector) . . . 2-54
Installation and Wiring of the ElectroGuard® Remote Lockout Station(s) 2-56
Overview 2-56
Remote Lockout Station Cable Specifications 2-56
Maximum Cable Length 2-57
Wiring the Remote Lockout Station 2-57
Installation and Wiring of the ElectroGuard® Dual Remote Lockout Station(s) 2-62
Overview 2-62
Remote Lockout Station Cable Specifications 2-62
Maximum Cable Length 2-63
Wiring the Dual Remote Lockout Station 2-63

Installation and Wiring of the ElectroGuard® Expansion Module 2-68
Overview 2-68
Installation of the Expansion Module 2-68
Wiring the Expansion Module 2-68
Installation and Wiring of the ElectroGuard® Verification Module 2-71
Overview 2-71
Installation of the Verification Module. 2-71
Wiring of the Verification Module 2-71
Installation and Wiring of the ElectroGuard® Pneumatic Isolation Module 2-72
Overview 2-72
Installation of the Pneumatic Isolation Module. 2-72
Wiring of the Pneumatic Isolation Module 2-72
Installation and Wiring of the Status Communication Modules . . . 2-73
Installation of the Communication Modules 2-73
Wiring of the Communication Module. 2-74
Final Steps for Installation and Wiring 2-81

Chapter 3 — Commissioning of the ElectroGuard® Safety Isolation System

Purpose 3-1
Required Equipment 3-2
ElectroGuard® Power Panel Verification 3-2
(Dual) Remote Lockout Station Verification 3-7
Expansion Module Verification 4-Port or 10-Port With or Without Time Delay. 3-10
Communication Module Verification 3-11
Pneumatic Isolation Module Verification 3-12
Control Module with Time Delay 3-13
Incoming Power Verification 3-14
Commissioning the Safety Isolation System Without Time Delay Option 3-15
Remote Lockout Station Sequence Tests (23... 85 A) 3-17
Remote Lockout Station Sequence Tests (110…1200 A) 3-19
Commissioning Expansion Module (4-Port or 10-Port With or Without Time Delay) (23…1200 A) 3-21
Commissioning Verification Module (with Gate Locks) 3-23
Commissioning Pneumatic Isolation Module Operation. 3-25
Commissioning the Communication Modules 3-27
Final Steps. 3-29

Chapter 4 — Troubleshooting

General 4-1
Field Repairs 4-3
Troubleshooting Flowchart and Tables 4-3
Operational Troubleshooting of the ElectroGuard® Power Panel (23…85 A) 4-33
Operational Troubleshooting of the ElectroGuard® Power Panel with all Remote Lockout Stations in the ON position 4-33

Safety Isolation System (Time Delay Option) 4-37
Safety Isolation System (Pneumatic Isolation Option) 4-37
Operational Troubleshooting of the ElectroGuard® Power Panel with all Remote Lockout Stations in the OFF Position. 4-38
Safety Isolation System Control Module (Time Delay Option) 4-39
Safety Isolation System (Pneumatic Isolation Option) 4-39
Operational Troubleshooting of the ElectroGuard® Power Panel (110… 1200 A) 4-40
Operational Troubleshooting of the ElectroGuard® Power Panel with All Remote Lockout Stations in the ON Position 4-40
Safety Isolation System (Time Delay Option) 4-45
Safety Isolation System (Pneumatic Isolation Option) 4-46
Operational Troubleshooting of the ElectroGuard® Power Panel with all Remote Lockout Stations in the OFF Position. 4-46
Operational Troubleshooting of the Verification Module 4-47
Operational Troubleshooting of the Pneumatic Isolation Module . 4-49
Operational Troubleshooting of the Expansion Module. 4-56
Operational Troubleshooting of the Expansion Module with All Remote Lockout Stations in the ON Position 4-56
Operational Troubleshooting of Series Connected Expansion Module (with all Remote Lockout Stations in the ON Position) 4-64
Operational Troubleshooting of the Expansion Module (Switching a Remote Lockout Station to the OFF Position). . . 4-65

Chapter 5

Preventive Maintenance

General 5-2
ElectroGuard® Power Panel. 5-3
Door Operated Devices 5-4
ElectroGuard® Service Log 5-4
Power Connections 5-4
Disconnect Switch (if Equipped) 5-4
Thermal-Magnetic Circuit Breaker (Option) 5-6
(Non-Combination System) 5-7
Isolation and Grounding Contactors Wiring Connections 5-8
Cooling Fans and Filters 5-11
Control Transformer and Circuit Protection 5-12
Equipment Ground 5-13
Isolated Ground Conductor 5-13
Product Information Labels 5-14
Control Module 5-16
Remote Lockout Station(s) 5-17
Expansion Module 5-22
Communication Module 5-23
Pneumatic Isolation Module 5-24

Final Preventive Maintenance Steps 5-25

Chapter 6 — Replacement Procedures

General 6-1
Remote Lockout Station 6-2
Remote Lockout Station 6-3
Removal 6-3
Installation 6-5
Power Restoration 6-7
Remote Lockout Station Load Switch Assembly 6-7
Removal 6-7
Installation 6-9
Power Restoration 6-11
Remote Lockout Station System Isolated LED 6-12
Removal 6-12
Installation 6-12
Remote Lockout Station Light Assembly 6-13
Removal 6-13
Installation 6-15
Power Restoration 6-15
Control Module 6-16
Removal 6-17
Installation 6-20
Power Restoration 6-25
Power Contactor and/or Mechanical Interlock (23…85 A) 6-26
Removal 6-27
Installation 6-30
Power Restoration 6-34
Power Contactor and/or Mechanical Interlock (110…1200 A) . . . 6-35
Removal 6-36
Power Restoration 6-38
Control Circuit Transformer 6-39
Removal 6-40
Installation 6-41
Push Buttons/Pilot Lights 6-43
Removal 6-43
Installation 6-45
Expansion Module 6-47
Removal 6-48
Installation 6-49
Power Restoration 6-50
Communication Module 6-51
Energy Lockout/Tagout 6-51
Removal and Installation 6-52
Power Restoration 6-52

Pneumatic Isolation Module 6-53
Removal 6-54
Installation 6-57
Power Restoration 6-58

Appendix A — Cat. No. Explanation

Bulletin 2031 Non-Combination Systems
(23…85 A). A-2
(110…1200 A). A-3
Bulletin 2032 Combination Systems with Fusible Disconnect
(23…85 A). A-4
Bulletin 2032 Combination Systems with Fusible Disconnect
(110…1200 A). A-5
Bulletin 2033 Combination Systems with Thermal-Magnetic
Circuit Breaker (23…85 A). A-6
Bulletin 2033 Combination Systems with Thermal-Magnetic
Circuit Breaker (110…1200 A). A-7
Bulletin 2030 Remote Lockout Station. A-8
Bulletin 2030 Expansion Module A-8
Bulletin 2030 Pneumatic Isolation Module. A-9
Bulletin 2030 Control Module. A-9
Bulletin 2030 Verification Module A-9

Appendix B — Specifications

Standards and Certifications - Conformity to Industry Standards. . . B-3

Appendix C — Sample Calculations of Remote Lockout Station Total Cable Length

Scenario 1 . . . . . C-1
Analysis. C-1
Scenario 2 . . . . . C-2
Analysis. C-3

Appendix D — Expansion Module Target Table

Target Table:. D-2

Appendix E — Replacement Parts

General E-1
Replacement Parts for the ElectroGuard® Power Panel. E-2
Replacement Control Modules E-9
Replacement Remote Lockout Station System Isolated Light LED
Lamps E-10
Replacement Remote Lockout Station Load Switch Assemblies . . E-10

Appendix F — Glossary

Glossary F-1

Appendix G — Product Information Labels

Product Safety Labels. G-1
Product Information Labels G-2

Product Overview

Section	Page
Purpose of the Safety Isolation System	1-1
Safety Requirements and Guidelines	1-1
Description of Use	1-2
Application	1-2
Operation	1-3
Sequence of Isolation Operation	1-4
Typical Safety Isolation System Layout	1-5

Purpose of the Safety Isolation System

The Bulletin 2030 ElectroGuard® Safety Isolation System (SIS) enhances the ability of the machine operator or maintenance personnel to perform lockout/tagout (LOTO) procedures, making it easier and quicker to perform LOTO. This may provide a higher level of compliance to LOTO procedures while minimizing lost productivity.

Safety Requirements and Guidelines

The ElectroGuard® is one subsystem of a machine control system. When installing any machine control system, it is necessary to follow the accompanying instructions and the requirements of the appropriate regulatory agencies.

This may include, but is not limited to, the following:

- NFPA 70 (The National Electrical Code) (USA)
- NFPA 70E (USA)
- NFPA 79 (USA)
- Relevant OSHA (Occupational Safety Hazards Administration) requirements (USA)
- Relevant National, State, Provincial, and Local Codes
- CSA Publication C22.1-02 (The Canadian Electrical Code)
- Relevant OH&S (Occupational Health and Safety) Act requirements (Canada)
- Requirements of EN 60204 (EU)

Description of Use

The Bulletin 2030 ElectroGuard® system is designed to act like an energy disconnect for a machine. The ElectroGuard® system isolates the energy by use of redundancy and operator feedback. The Remote Lockout Stations provide the input signal to the power panel. When a Remote Lockout Station is switched off, components in the power panel and, if installed, the Pneumatic Module, remove the hazardous energy. Once this is done, a signal is sent back to the Remote Lockout Station and a light is illuminated. This gives indication to personnel that the system has been isolated.

IMPORTANT The ElectroGuard® SIS must not be used for the starting or stopping of the machine. The normal machine starting and stopping means must be used.

Application

The ElectroGuard® SIS provides disconnection, isolation, and grounding functionality. It provides the necessary isolation of energy to allow work on, or access to, machine elements that are normally electrically or pneumatically powered.

Operation

The ElectroGuard® system is placed in series with the energy source of the machine.

The Control Module performs the function of controling and verifying the ElectroGuard® system function. Every function is commanded and monitored for completion. The Control Module sends and receives signals from the ElectroGuard® Power Panel, the Pneumatic Isolation Module, and the Remote Lockout Stations.

At any time, if either of the ElectroGuard® Power Panel's ground is broken, the ElectroGuard® system will shutdown. Under a fault or shutdown condition of the ElectroGuard® system, the "System Isolated" light will not be illuminated. No light means no entry.

The ElectroGuard®'s Control Module is powered by a 120V control transformer in the power panel. A 24V DC power supply within the Control Module provides power for the Control Module logic and some external devices. All external modules are powered from the power panel. The RLSs operate on 24V DC, and the Pneumatic Isolation Module operates on both 120V AC and 24V DC.

Figure 1.1
ElectroGuard® Safety Isolation System Block Diagram

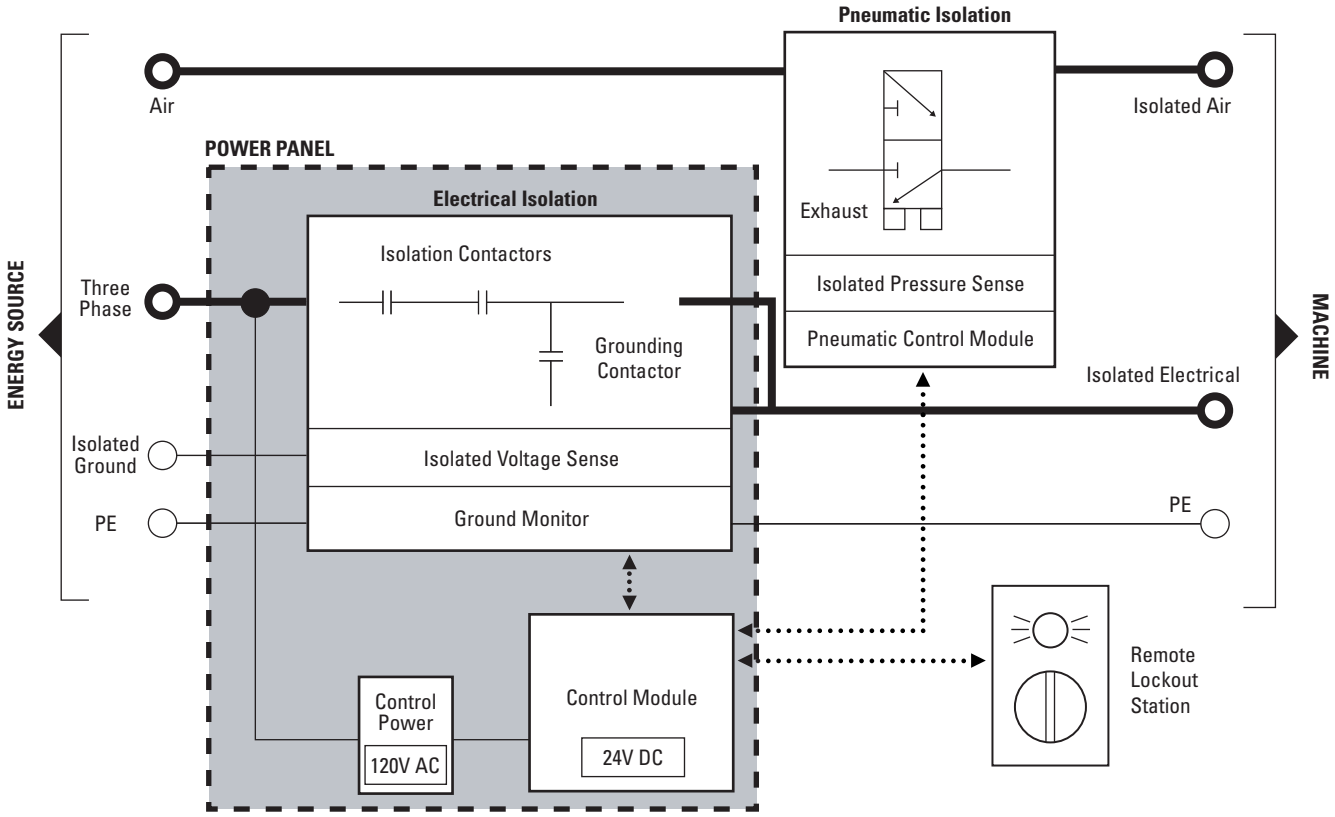

Sequence of Isolation Operation

1. The Remote Lockout Station initiates the isolation sequence, by an operator turning the handle from the ON to OFF position.

2. The Control Module responds by commanding the isolation module(s), electrical and pneumatic (if installed), to isolate and verify isolation.
   a. The electrical isolation module opens two series contactors. The voltage sense circuit monitors the isolated voltage. When it reaches a safe level, the grounding contactor connects the isolated electrical lines to the isolated ground. Electrical isolation is now completed and verified by the Control Module.
   b. If installed, the Pneumatic Isolation Module opens the pneumatic safety valve and redundant pressure sensors verify isolation has completed. Pneumatic isolation is now completed and verified by the Pneumatic Control Module.

3. After successful isolation, the Control Module illuminates that operator's Remote Lockout Station “System Isolated” light.

4. Authorized personnel may now apply a LOTO lock to the Remote Lockout Station.

ATTENTION

Hazardous voltage or other forms of energy could be present. To avoid serious injury or death:

The ElectroGuard® can isolate the electrical energy to a portion of the machine, or the entire machine or process as required.

OSHA Lockout/Tagout (LOTO) standards require that all sources of energy must be isolated from the machine or process prior to entering or servicing the machine or process. Turning the operating handle of the RLSs to the OFF position will initiate isolation of the electrical energy to the loads connected to the ElectroGuard® only.

The ElectroGuard® will not isolate external energy sources that may be feeding portions of the controllers on the load side of the ElectroGuard®.

ATTENTION

Hazardous voltage or other forms of energy could be present. To avoid serious injury or death:

A risk analysis must be performed and LOTO procedures should be developed prior to applying an ElectroGuard® system.

Typical Safety Isolation System Layout

Figure 1.2
Typical 23…85 A Safety Isolation System Layout (85A Version Shown)

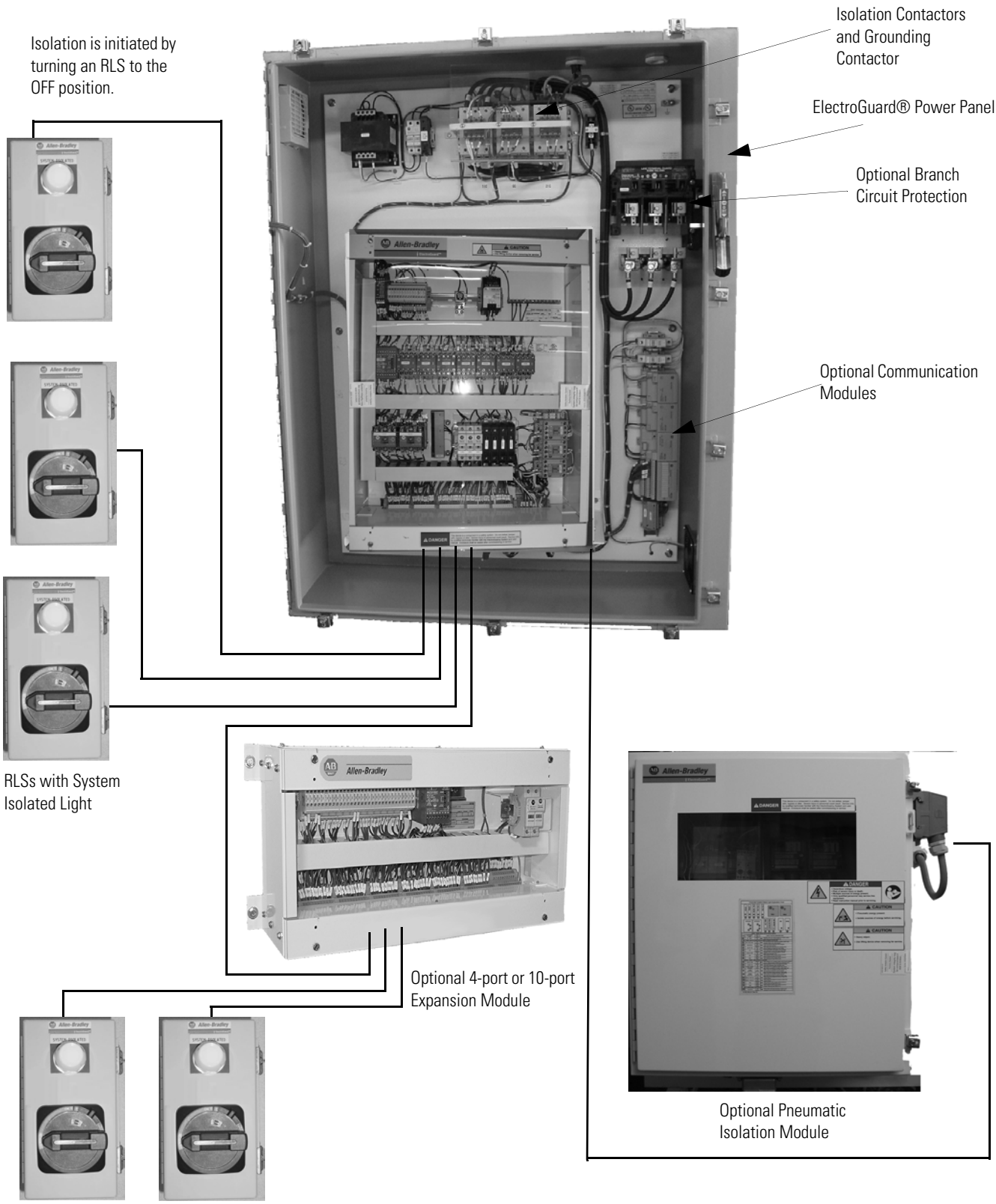

Figure 1.3
Typical 110…1200 A Safety Isolation System Layout
MCC Type Main Panel Enclosure (210 A Version Shown)

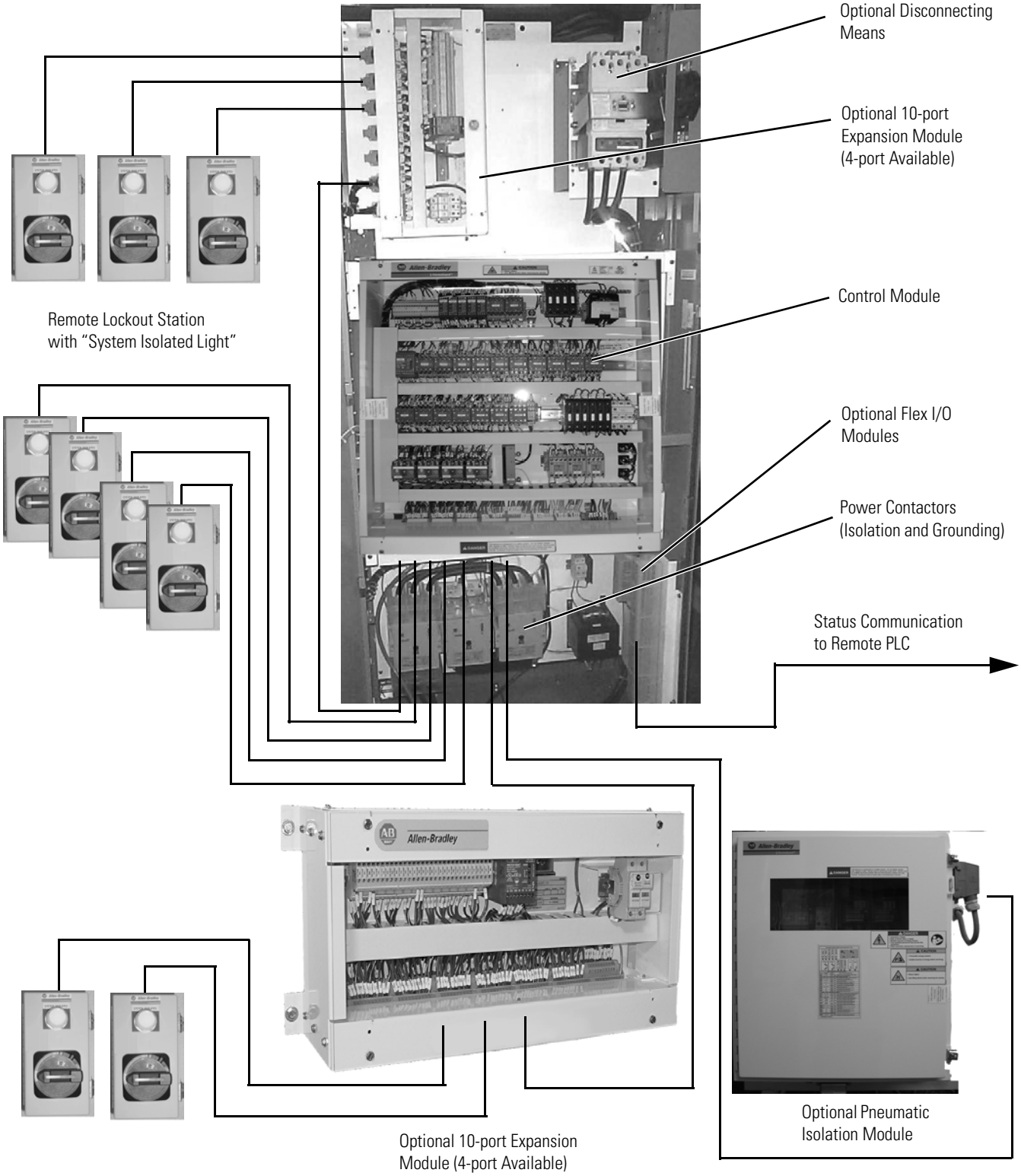

Installation and Wiring

Section	Page
Pre-Installation Precautions	2-1
Dimensions	2-4
Approximate Weights	2-25
Receiving the ElectroGuard® Power Panel and Modules	2-26
Installation and Wiring of the ElectroGuard® Power Panel	2-34
Installation and Wiring of the ElectroGuard® Control Module	2-45
Installation and Wiring of the ElectroGuard® Remote Lockout Station(s)	2-56
Installation and Wiring of the ElectroGuard® Dual Remote Lockout Station(s)	2-62
Installation and Wiring of the ElectroGuard® Remote Lockout Station(s)	2-56
Installation and Wiring of the ElectroGuard® Verification Module	2-71
Installation and Wiring of the ElectroGuard® Pneumatic Isolation Module	2-72
Installation and Wiring of the Status Communication Modules	2-73
Final Steps for Installation and Wiring	2-81

Pre-Installation Precautions

ATTENTION

The following information is only a guide for proper installation. Rockwell Automation cannot assume responsibility for the compliance or non-compliance to any code, national, local, or otherwise for the proper installation of the ElectroGuard® or associated equipment.

ATTENTION

Hazardous voltage or other forms of energy could be present. To avoid serious injury or death:

Prior to beginning the installation and wiring process, make sure that all forms of energy to the installation site have been properly turned OFF and locked out.

ATTENTION

Only qualified service technicians familiar with the ElectroGuard® and associated machinery should plan or implement the installation, commissioning, and subsequent maintenance of the system. Failure to do this may result in personal injury and/or equipment damage.

ATTENTION

ElectroGuard® system modules are factory sealed with a tamper-indicating seal. Altering, defeating, or bypassing any module or component of the Safety Isolation System may result in personal injury, death, property damage, or economic loss. Only qualified service technicians must perform service or maintenance. Resealing of the modules is the responsibility of the person or organization performing the service or maintenance.

IMPORTANT

The ElectroGuard® is not designed to provide the start and stop functions for the machine or process. The normal starting and stopping means of the machine or process must be used.

Power Fuses or Circuit Breaker Requirements

IMPORTANT

The ElectroGuard® does not provide branch circuit protection. Follow the requirements of regulatory agencies and local codes to select the circuit required for both line and load circuits. ElectroGuard® is available with branch circuit protection, either fuse or circuit breaker.

IMPORTANT

The Control Module "HV" terminal block must be reconfigured when the incoming power to the ElectroGuard® system is 3-Phase Delta connected using a grounded mid-point of a phase, a grounded junction of phases, or when a high resistance ground is used. If one of these power systems are used, the jumper wire supplied on the Control Module "HV" terminal block between terminals (1) and (7) must be removed and discarded. Refer to wiring diagram supplied with the equipment for location of jumper wire.

Figure 2.1 Power System Configurations

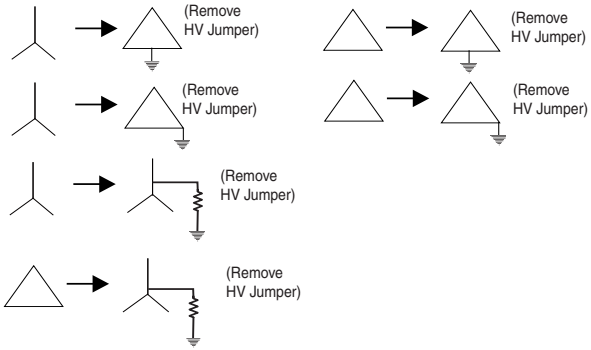

480V and Below 3-Phase Supplied Systems (Shown above)	Remove Factory Installed Jumper Wire on "HV" Terminal Block
Above 480V 3-Phase Supplied Systems (Shown above)	Verify that jumper Wire is not Present from the Factory

Isolated Grounding Conductor

ATTENTION

The ElectroGuard® includes the equipment grounding (P.E.) lug, and the isolated grounding conductor terminal block. Both are located on the Power Panel.

The purpose of the isolated grounding conductor is to provide a direct connection from the SIS to the main power distribution earth ground. If this connection is lost during system operation, the SIS will shut down.

An isolated grounding conductor **must** be connected between the isolated grounding conductor terminal block and the main power distribution earth ground (i.e. the point where all grounds are bonded together).

Figure 2.2
Isolated Ground Conductor

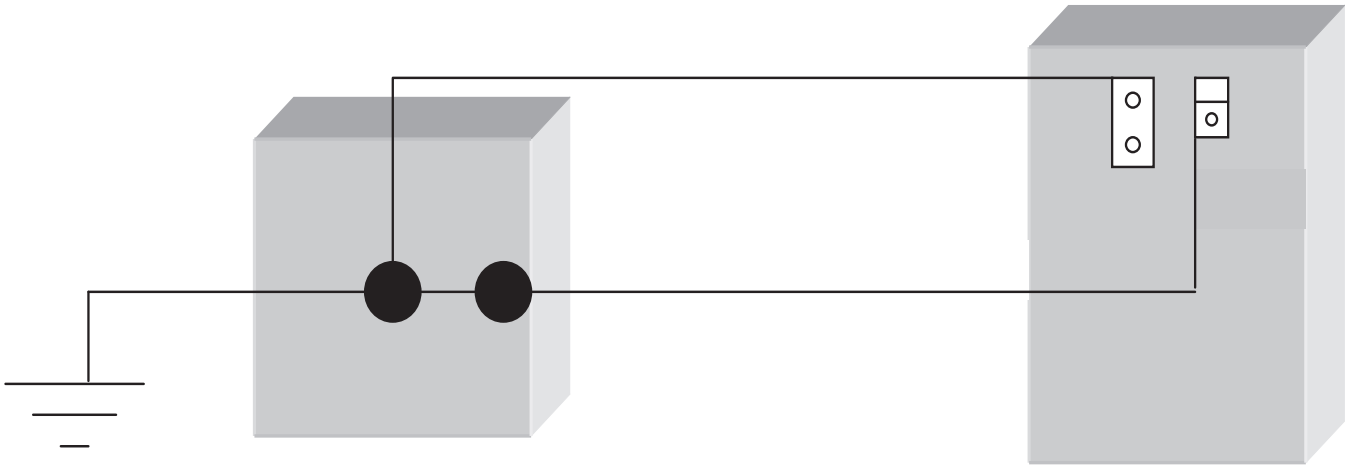

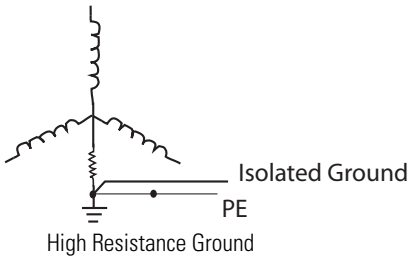

Dimensions

IMPORTANT

- All of the dimensions in this section are approximate and are not intended for manufacturing purposes. Consult your local Allen-Bradley distributor for complete dimension drawings. All dimensions are subject to change.
- Conduit entry holes are not provided.
- If conduit is used, use appropriately rated conduit and hubs.

Table 2.1 (23… 85 A) Approximate Enclosure Dimensions

Bulletin Number	Enclosure	Dimensions		
		A in. (mm)	B in. (mm)	C in. (mm)
2031	Type 1	36.00 (914.40)	30.00 (762.00)	36.90 (937.26)
	Type 12	36.00 (914.40)	30.00 (762.00)	36.90 (937.26)
	Type 4	36.00 (914.40)	30.00 (762.00)	36.90 (937.26)
	Type 4X	36.00 (914.40)	30.00 (762.00)	36.90 (937.26)
2032 2033	Type 1	37.38 (949.45)	31.38 (797.05)	38.28 (972.31)
	Type 12	37.38 (949.45)	31.38 (797.05)	38.28 (972.31)
	Type 4	37.38 (949.45)	31.38 (797.05)	38.28 (972.31)
	Type 4X	37.38 (949.45)	31.38 (797.05)	38.28 (972.31)

Figure 2.3
(23… 85 A) Non-Combination or Combination ElectroGuard® Power Panel

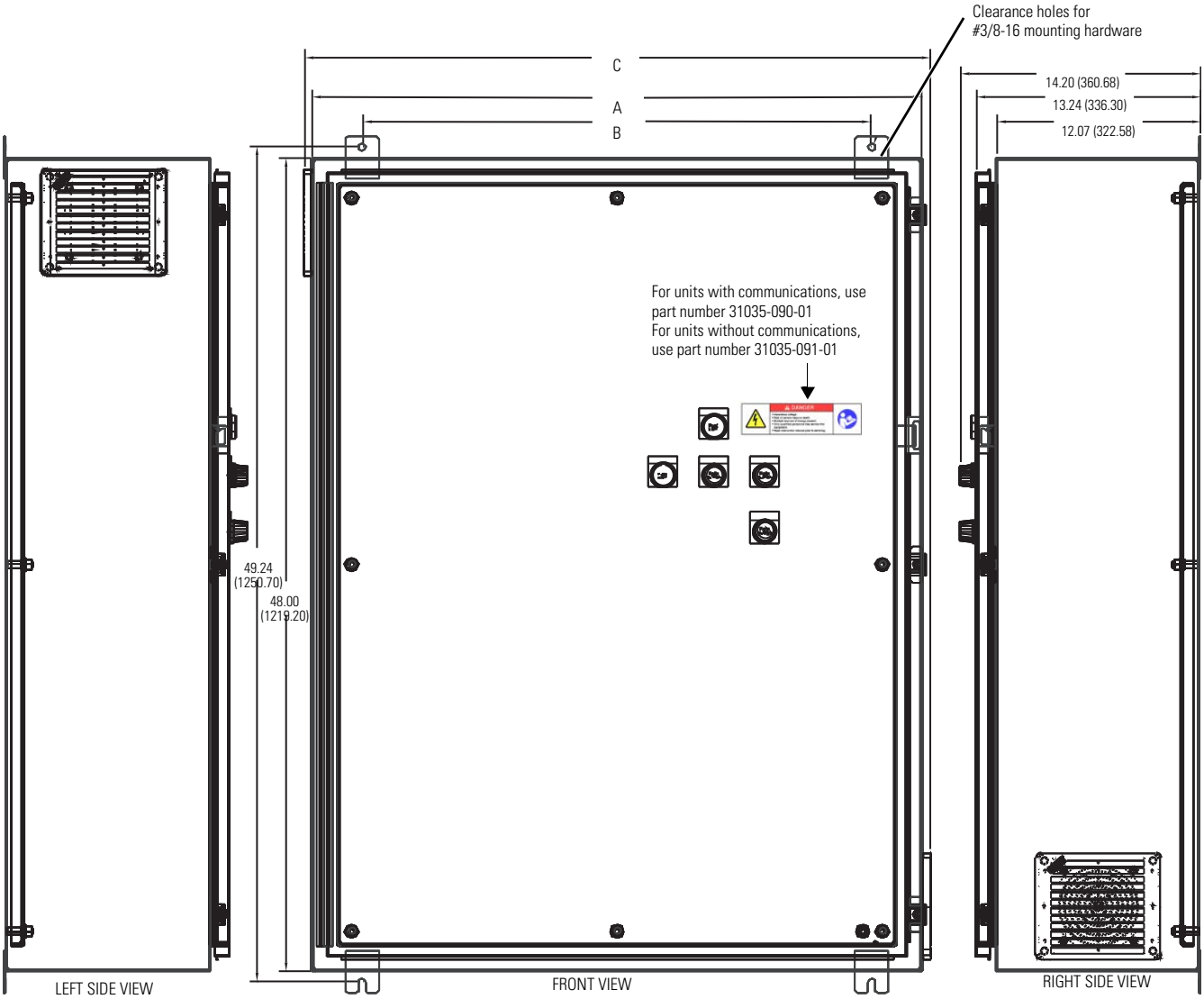

NOTES:
1) DIMENSIONS IN PARENTHESES ARE IN MILLIMETERS
2) ALL DIMENSIONS ARE APPROXIMATE AND NOT INTENDED FOR MANUFACTURING PURPOSES

Table 2.2 (110...1200 A) Approximate Enclosure Dimensions

Bulletin Number	Current Rating (A)	Enclosure Type	See Figure	Width in. (mm)	Sections
Non-Combination (without bus)					
2031	110	1, 12	2.4	35 (889)	1
		4, 4X	2.6	40 (1016)	
	180	1, 12	2.4	35 (889)	
		4, 4X	2.6	40 (1016)	
	210	1, 12	2.4	35 (889)	
		4, 4X	2.6	40 (1016)	
	300	1, 12	2.4	35 (889)	
		4, 4X	2.6	40 (1016)	
	420	1, 12	2.4	35 (889)	
		4, 4X	2.6	40 (1016)	
	630	1, 12	2.5	40 (1016)	
		4, 4X	2.6	40 (1016)	
	860	1, 12	2.5	40 (1016)	
		4, 4X	2.6	40 (1016)	
	1200	1, 12	2.9	75 (1905)	2
		4, 4X	2.10	79 (2007)	
Non-Combination (with bus)					
2031	110	12	2.4	35 (889)	1
	180	12	2.4	35 (889)	
	210	12	2.4	35 (889)	
	300	12	2.4	35 (889)	
	420	12	2.4	35 (889)	
	630	12	2.5	40 (1016)	
	860	12	2.5	40 (1016)	
	1200	12	2.9	75 (1905)	2

Note: All height is 90 in.(2.286 mm); all depth is 20 in. (508 mm)

Table 2.2 (110...1200 A) Approximate Enclosure Dimensions (Continued)

Bulletin Number	Current Rating (A)	Enclosure Type	See Figure	Width in. (mm)	Sections
Fusible Disconnect (without bus)					
2032	110	1, 12	2.4	35 (889)	1
		4, 4X	2.6	40 (1016)	
	180	1, 12	2.4	35 (889)	
		4, 4X	2.6	40 (1016)	
	210	1, 12	2.4	35 (889)	
		4, 4X	2.6	40 (1016)	
	300	1, 12	2.4	35 (889)	
		4, 4X	2.6	40 (1016)	
	420	1, 12	2.7	55 (1397)	2
		4, 4X	2.10	79 (2007)	
	630	1, 12	2.8	60 (1524)	
		4, 4X	2.10	79 (2007)	
	860	1, 12	2.8	60 (1524)	
		4, 4X	2.10	79 (2007)	
	1200	1, 12	2.12	110 (2794)	3
		4, 4X	2.13	119 (3023)	
Fusible Disconnect (with bus)					
2032	110	12	2.4	35 (889)	1
	180	12	2.4	35 (889)	
	210	12	2.4	35 (889)	
	300	12	2.4	35 (889)	
	420	12	2.7	55 (1397)	2
	630	12	2.8	60 (1524)	
	860	12	2.8	60 (1524)	
	1200	12	2.12	110 (2794)	3

Note: All height is 90 in.(2.286 mm); all depth is 20 in. (508 mm)

Table 2.2 (110...1200 A) Approximate Enclosure Dimensions (Continued)

Bulletin Number	Current Rating (A)	Enclosure Type	See Figure	Width in. (mm)	Sections
Circuit Breaker (without bus)					
2033	110	1, 12	2.4	35 (889)	1
		4, 4X	2.6	40 (1016)	
	180	1, 12	2.4	35 (889)	
		4, 4X	2.6	40 (1016)	
	210	1, 12	2.4	35 (889)	
		4, 4X	2.6	40 (1016)	
	300	1, 12	2.4	35 (889)	
		4, 4X	2.6	40 (1016)	
	420	1, 12	2.8	55 (1397)	2
		4, 4X	2.10	79 (2007)	
	630	1, 12	2.8	60 (1524)	
		4, 4X	2.10	79 (2007)	
	860	1, 12	2.8	60 (1524)	
		4, 4X	2.10	79 (2007)	
	1200	1, 12	2.11	110 (2794)	3
		4, 4X	2.13	119 (3023)	
Circuit Breaker (with bus)					
2033	110	12	2.4	35 (889)	1
	110	12	2.4	35 (889)	
	180	12	2.4	35 (889)	
	210	12	2.4	35 (889)	
	300	12	2.4	35 (889)	
	420	12	2.7	55 (1397)	2
	630	12	2.8	60 (1524)	
	860	12	2.8	60 (1524)	
	1200	12	2.11	105	3

Note: All height is 90 in.(2.286 mm); all depth is 20 in. (508 mm)

Figure 2.4
35 in. Wide Single-door MCC Enclosure Type 1, 12
Bulletin 2031 (110…420 A)
Bulletin 2032 (110…300 A)
Bulletin 2033 (110…300 A)

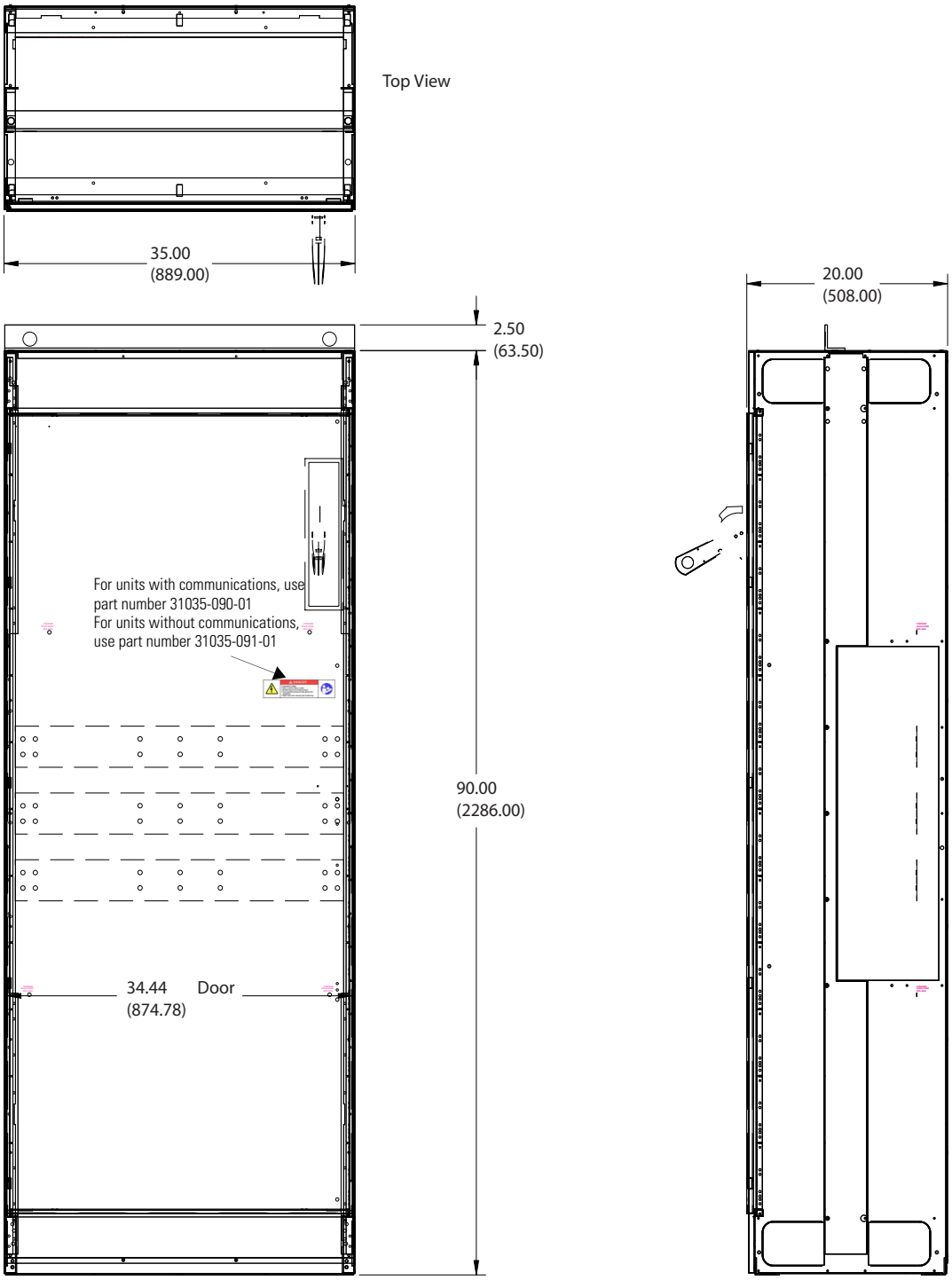

NOTES:
1) DIMENSIONS IN PARENTHESES ARE IN MILLIMETERS
2) ALL DIMENSIONS ARE APPROXIMATE AND NOT INTENDED FOR MANUFACTURING PURPOSES

Figure 2.5
40 in. Wide Two-door MCC Enclosure, Type 1, 12
Bulletin 2031 (630…860 A)

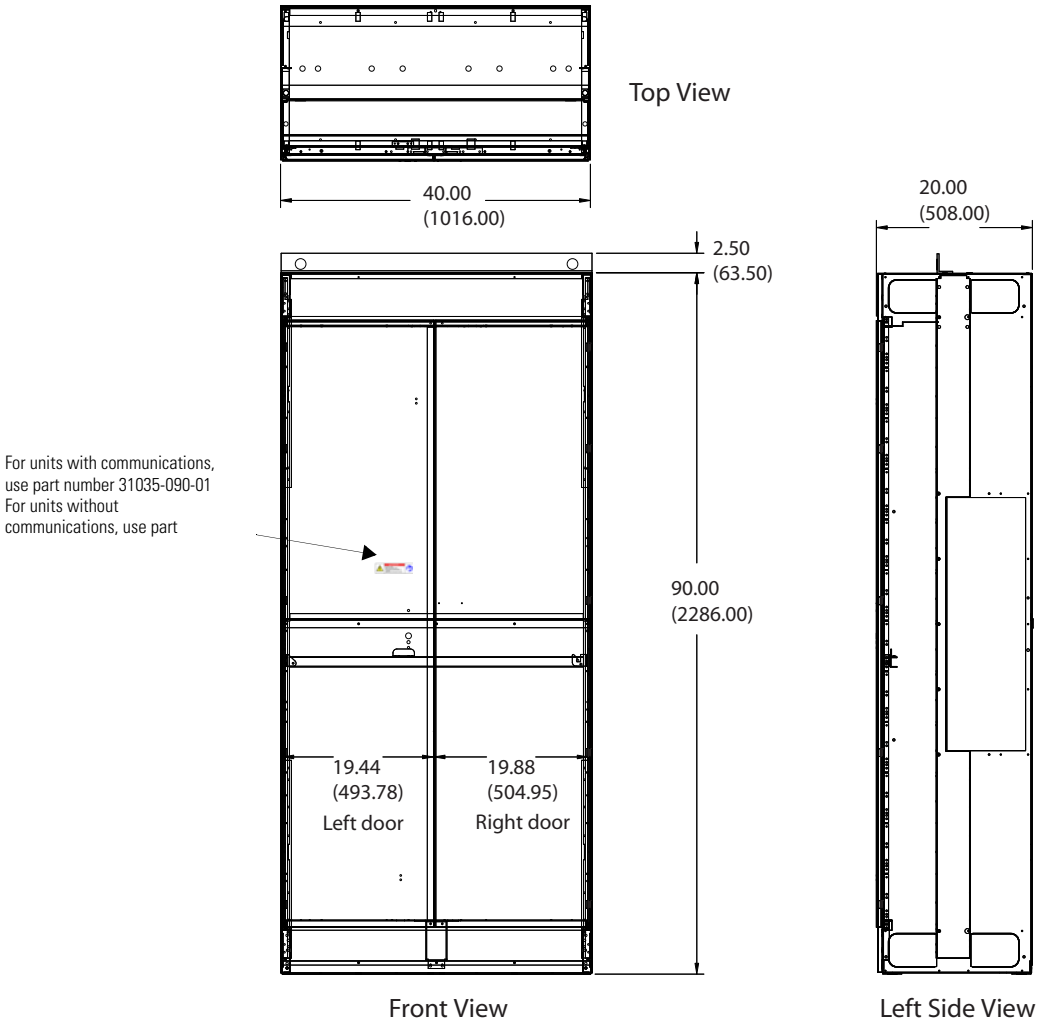

NOTES:
1) DIMENSIONS IN PARENTHESES ARE IN MILLIMETERS
2) ALL DIMENSIONS ARE APPROXIMATE AND NOT INTENDED FOR MANUFACTURING PURPOSES

Figure 2.6
40 in. Wide Single-door MCC Enclosure, Type 4, 4X
Bulletin 2031 (110…860 A)
Bulletin 2032 (110…300 A)

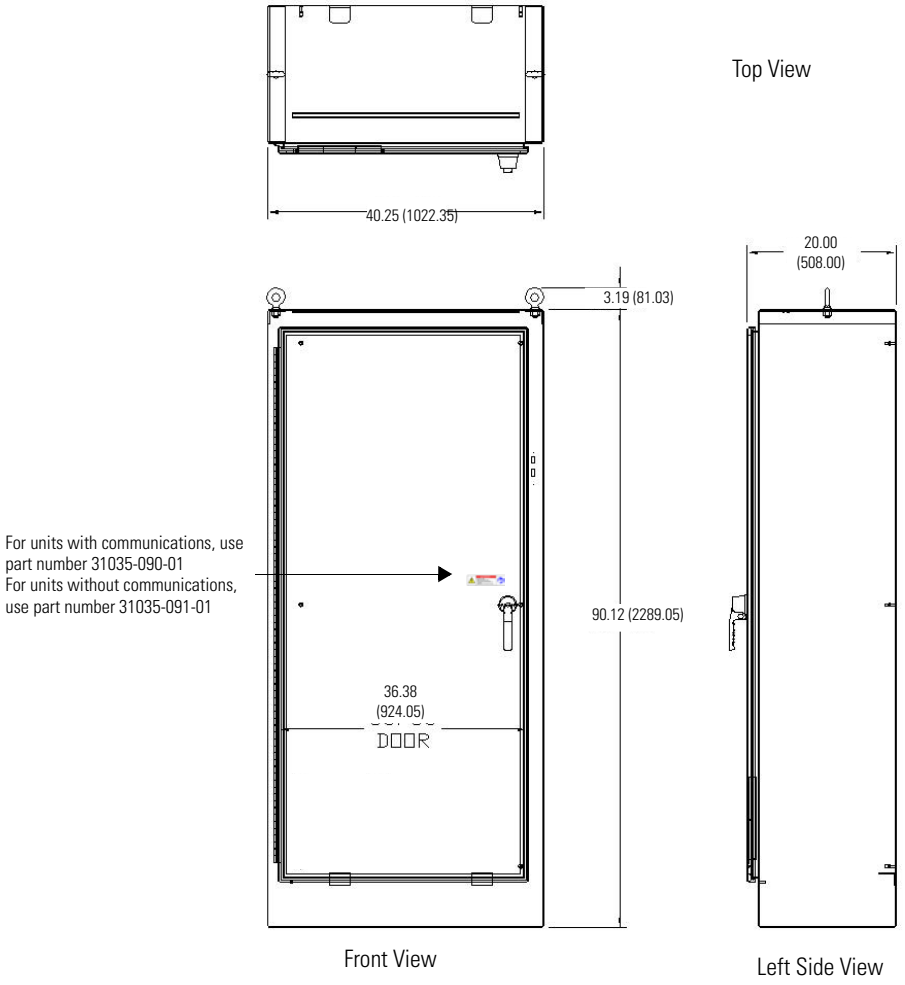

NOTES:
1) DIMENSIONS IN PARENTHESES ARE IN MILLIMETERS
2) ALL DIMENSIONS ARE APPROXIMATE AND NOT INTENDED FOR MANUFACTURING PURPOSES

Figure 2.7
55 in. Wide MCC Enclosure Type 1, 12
Bulletin 2032 (420 A)
Bulletin 2033(420 A)

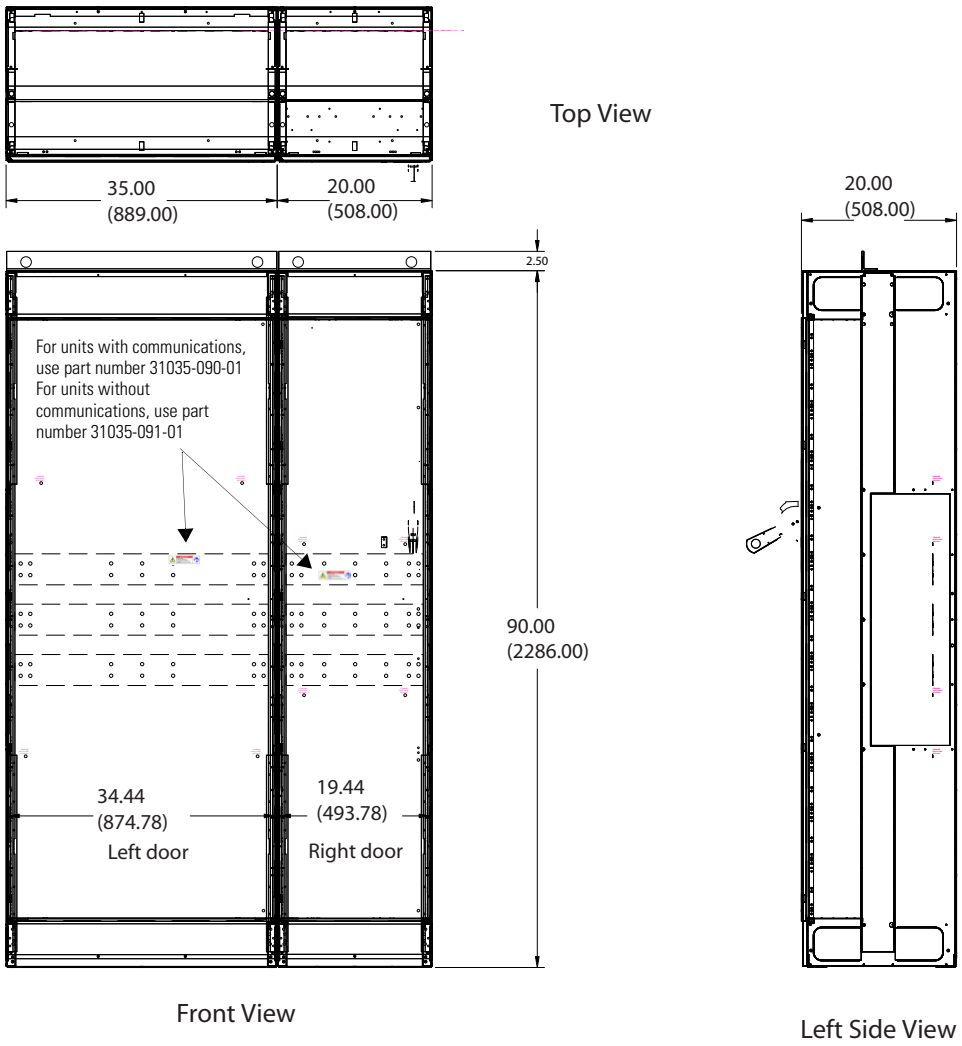

NOTES:
1) DIMENSIONS IN PARENTHESES ARE IN MILLIMETERS
2) ALL DIMENSIONS ARE APPROXIMATE AND NOT INTENDED FOR MANUFACTURING PURPOSES

Figure 2.8
60 in. Wide MCC Enclosure Type 1, 12
Bulletin 2032 (630…860 A)
Bulletin 2033 (630…860 A)

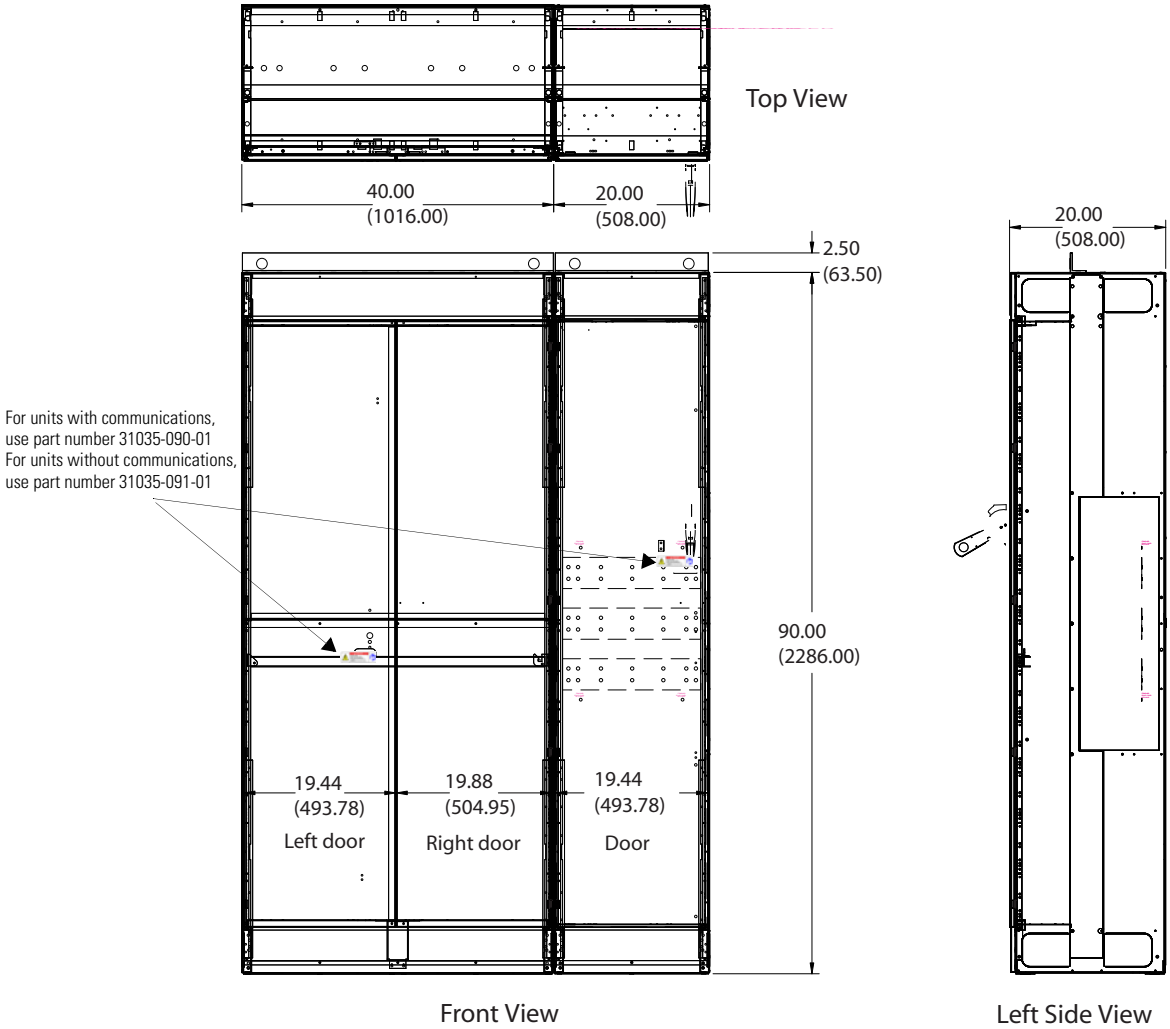

NOTES:
1) DIMENSIONS IN PARENTHESES ARE IN MILLIMETERS
2) ALL DIMENSIONS ARE APPROXIMATE AND NOT INTENDED FOR MANUFACTURING PURPOSES

Figure 2.9
75 in. Wide MCC Enclosure Type 1, 12
Bulletin 2031 (1200 A)

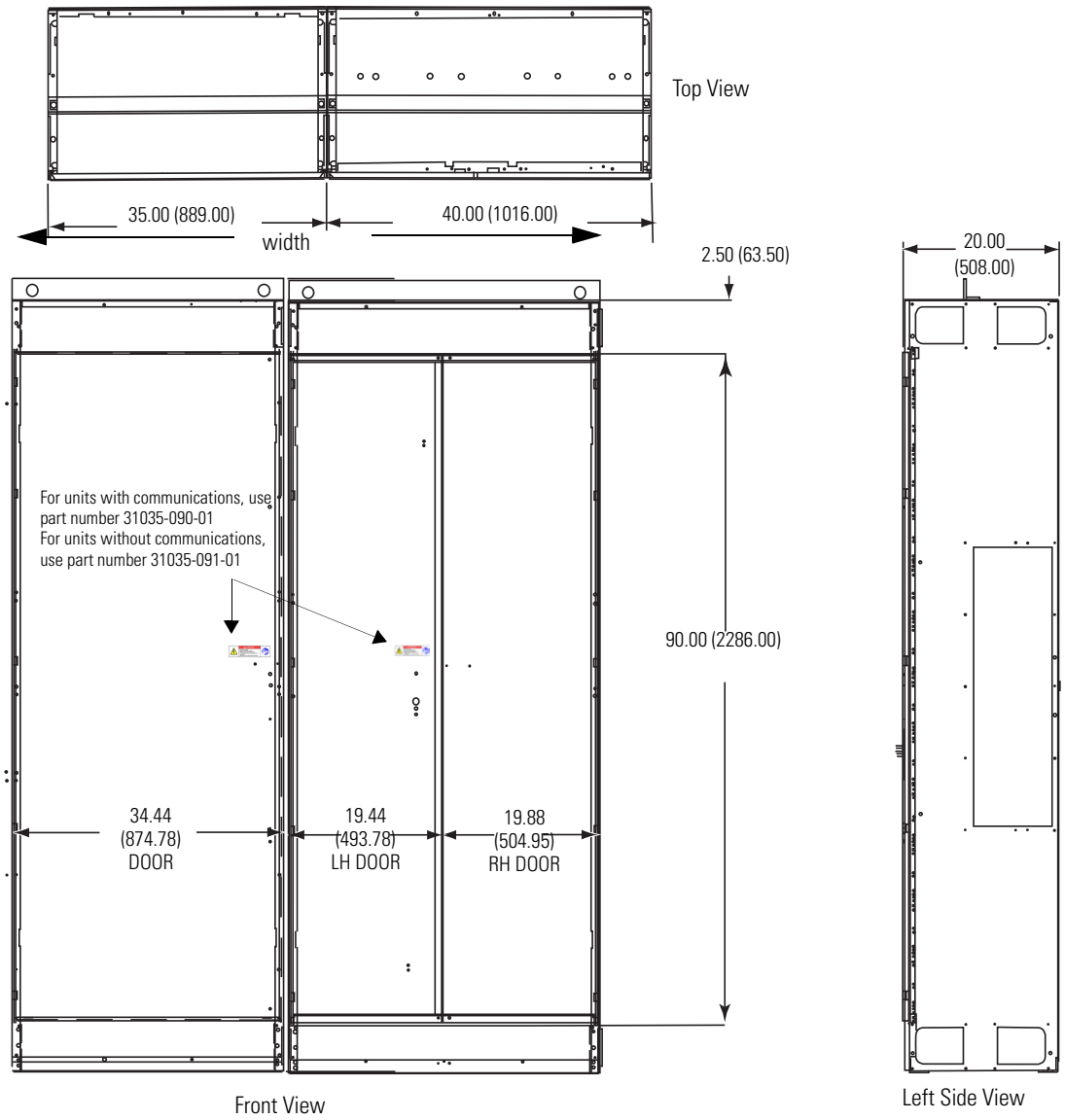

NOTES:
1) DIMENSIONS IN PARENTHESES ARE IN MILLIMETERS
2) ALL DIMENSIONS ARE APPROXIMATE AND NOT INTENDED FOR MANUFACTURING PURPOSES

Figure 2.10
79 in. Wide Two-door MCC Enclosure, Type 4, 4X
Bulletin 2031 (1200 A)
Bulletin 2032 (420…860 A)

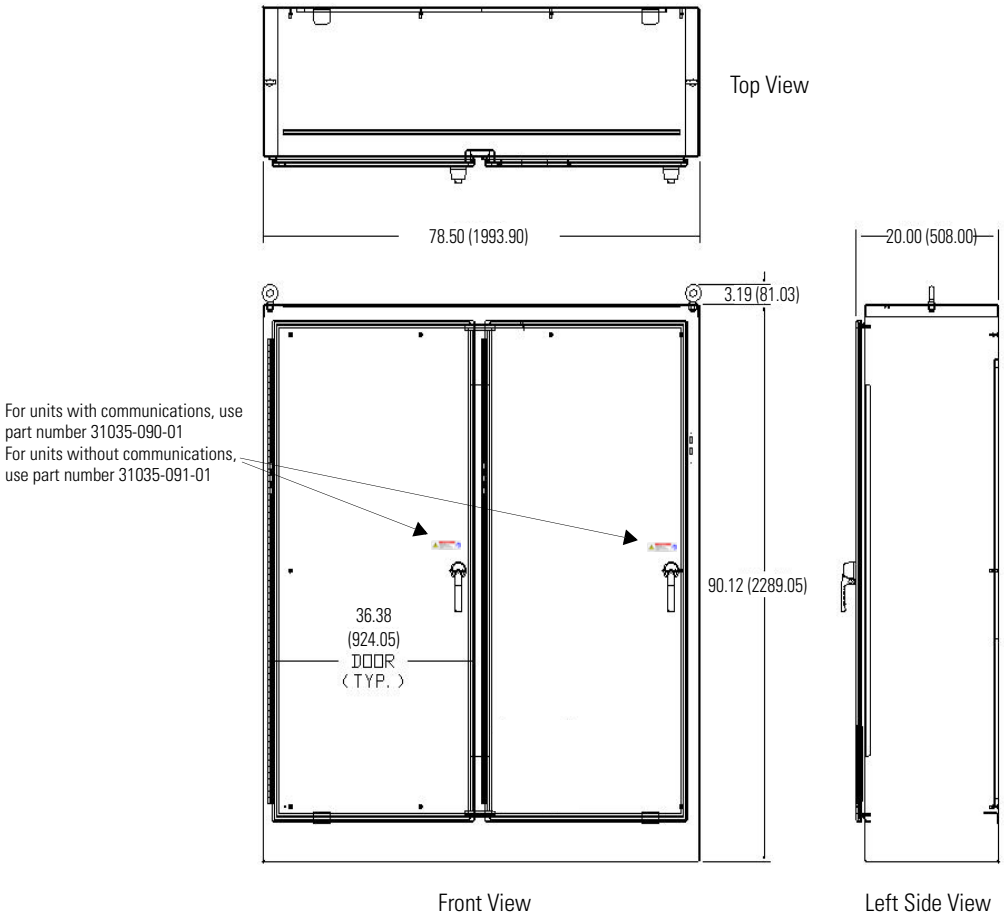

NOTES:
1) DIMENSIONS IN PARENTHESES ARE IN MILLIMETERS
2) ALL DIMENSIONS ARE APPROXIMATE AND NOT INTENDED FOR MANUFACTURING PURPOSES

Figure 2.11
105 in. Wide MCC Enclosure Type 1.12
Bulletin 2033 (1200 A)

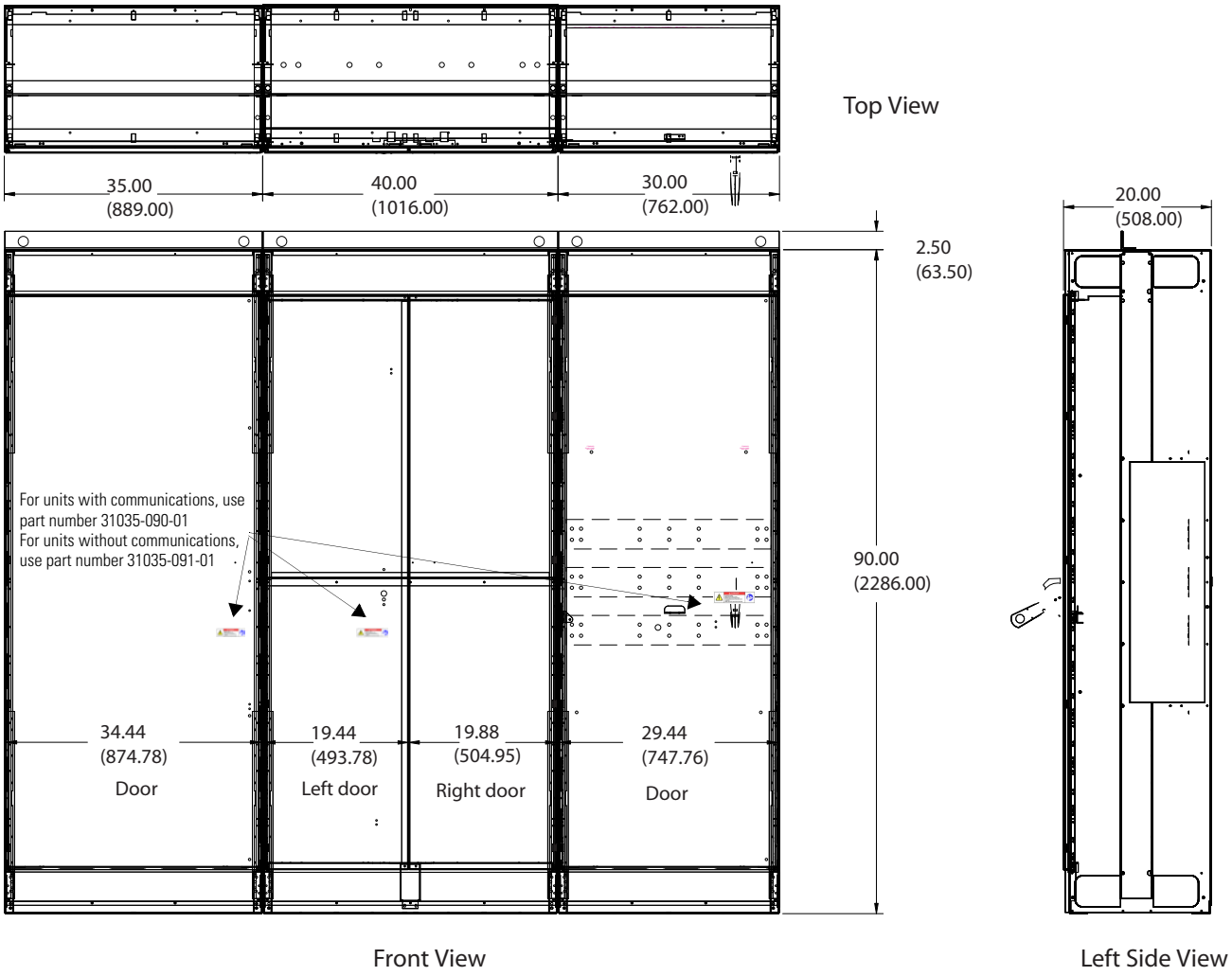

NOTES:
1) DIMENSIONS IN PARENTHESES ARE IN MILLIMETERS
2) ALL DIMENSIONS ARE APPROXIMATE AND NOT INTENDED FOR MANUFACTURING PURPOSES

Figure 2.12
110 in. Wide MCC Enclosure Type 1, 12
Bulletin 2032 (1200 A)

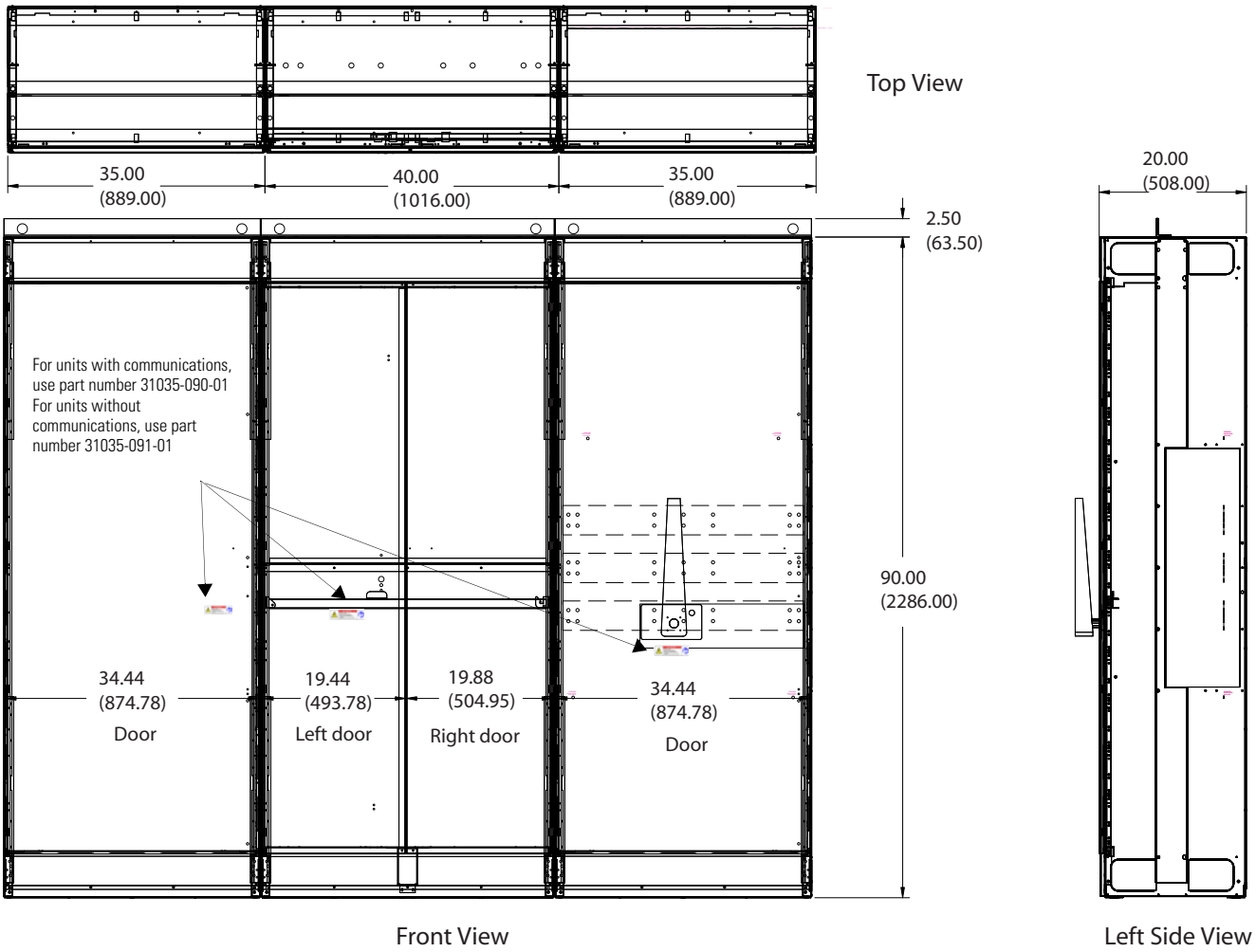

NOTES:
1) DIMENSIONS IN PARENTHESES ARE IN MILLIMETERS
2) ALL DIMENSIONS ARE APPROXIMATE AND NOT INTENDED FOR MANUFACTURING PURPOSES

Figure 2.13
119 in. Wide Two-door MCC Enclosure, Type 4, 4X
Bulletin 2032 (1200 A)

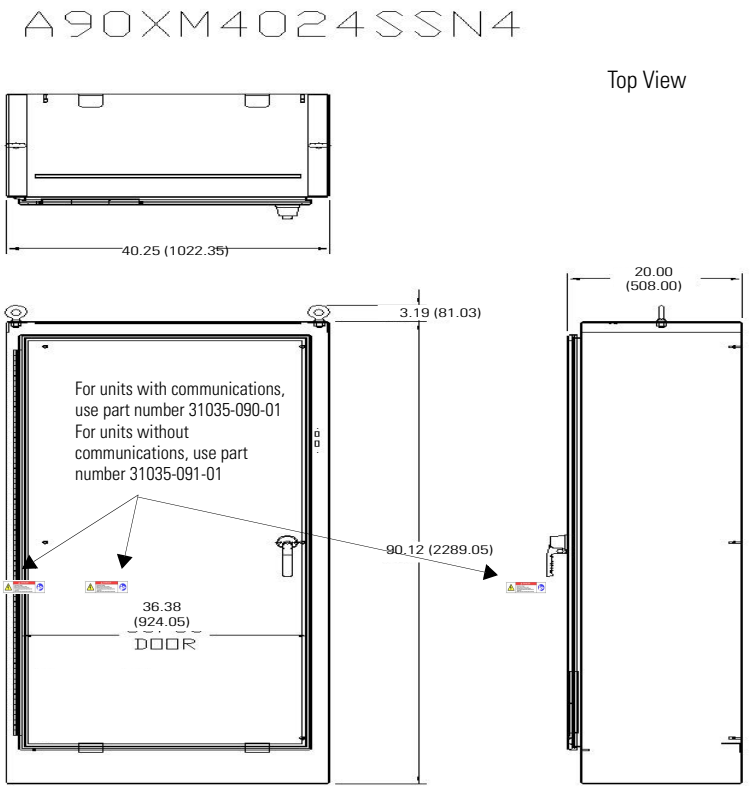

Front View

Left Side View

NOTES:
1) DIMENSIONS IN PARENTHESES ARE IN MILLIMETERS
2) ALL DIMENSIONS ARE APPROXIMATE AND NOT INTENDED FOR MANUFACTURING PURPOSES

Figure 2.14
Single Remote Lockout Station (Type 12 Enclosure)

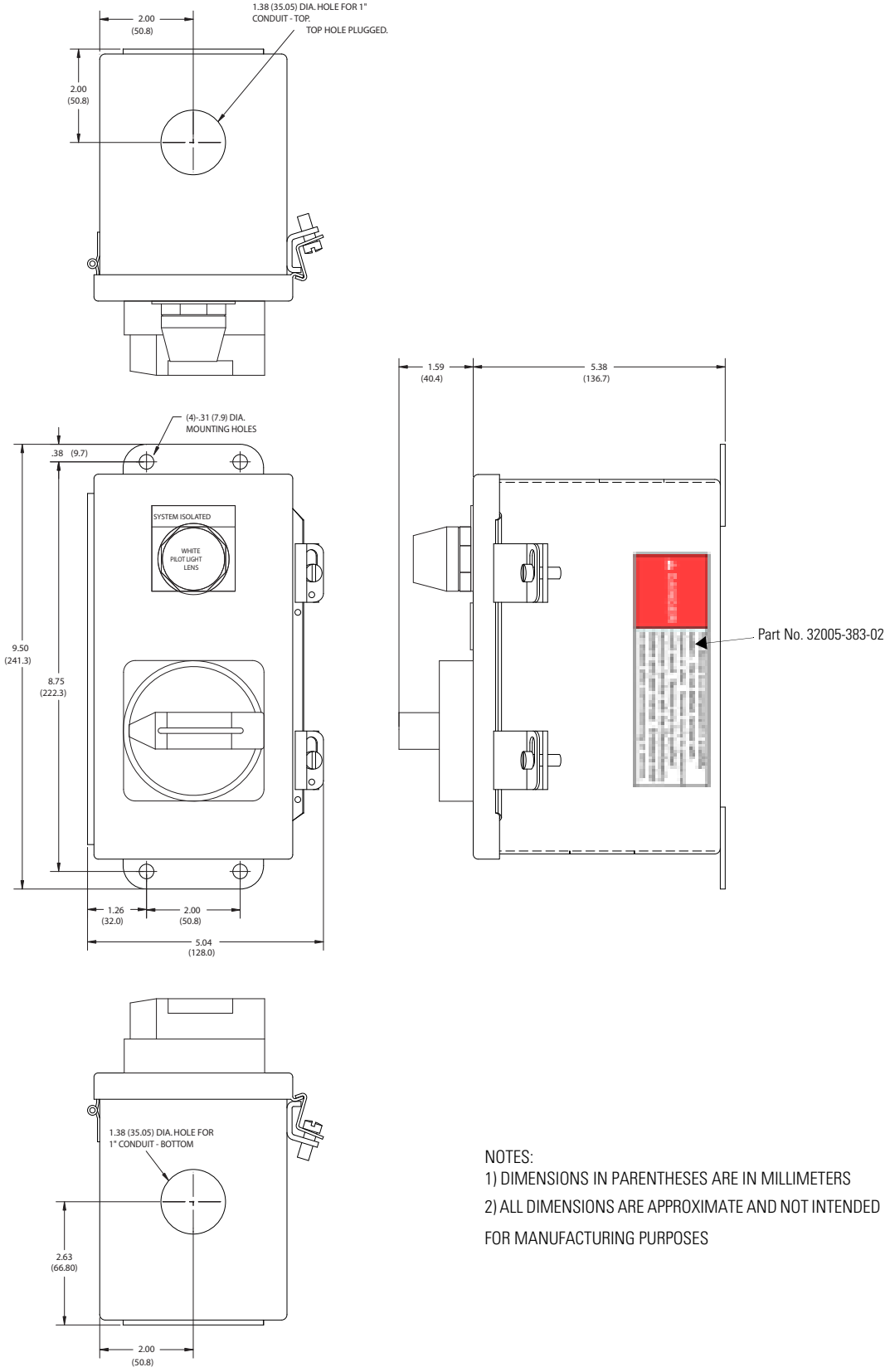

NOTES:
1) DIMENSIONS IN PARENTHESES ARE IN MILLIMETERS
2) ALL DIMENSIONS ARE APPROXIMATE AND NOT INTENDED FOR MANUFACTURING PURPOSES

Figure 2.15
Dual Remote Lockout Station (Type 12 Enclosure Shown)

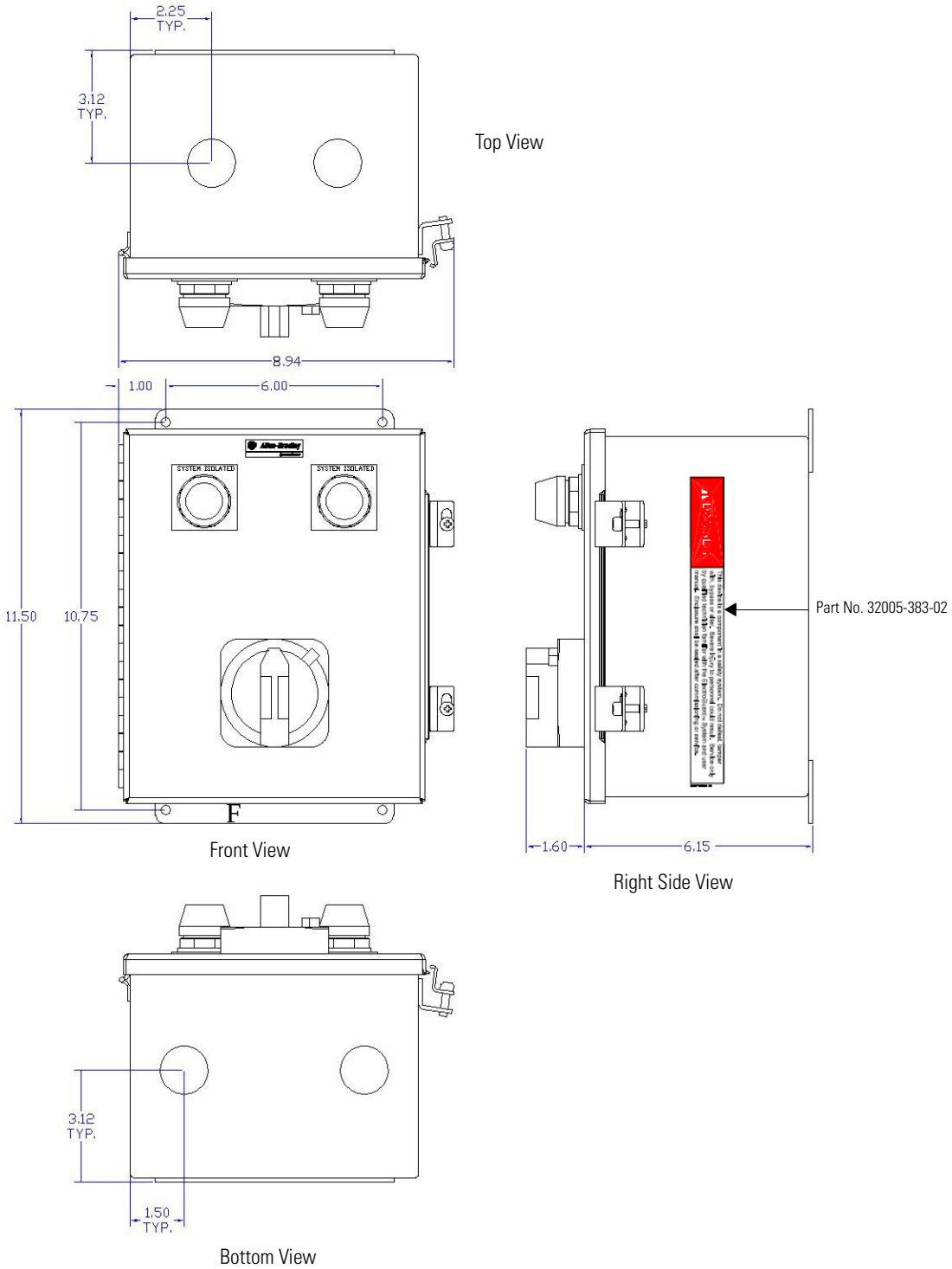

Note: Dimensions are in inches. Dimensions are not intended for manufacturing purposes.

Figure 2.16
NEMA 7/9

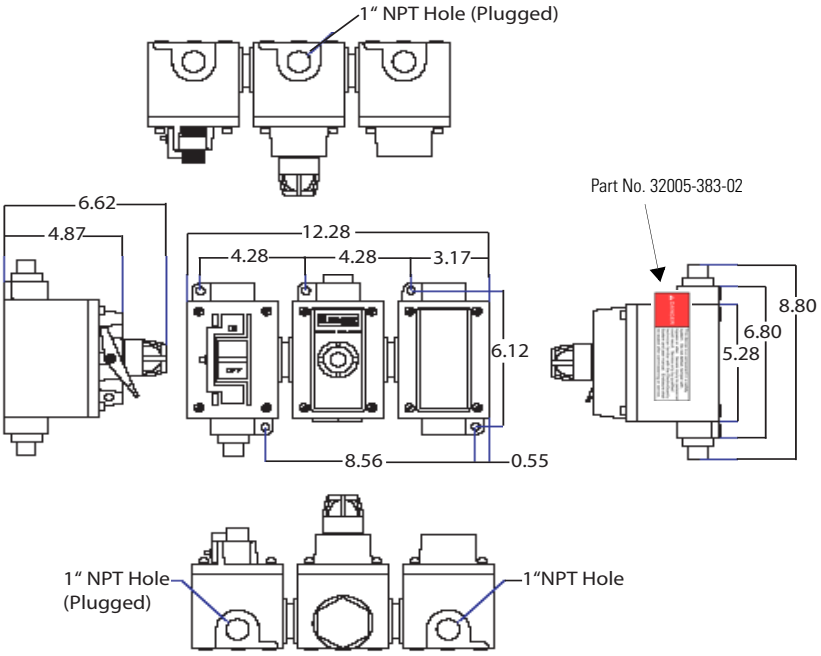

Note: Dimensions are in inches. Dimensions are not intended for manufacturing purposes.

Figure 2.17
Verification Module

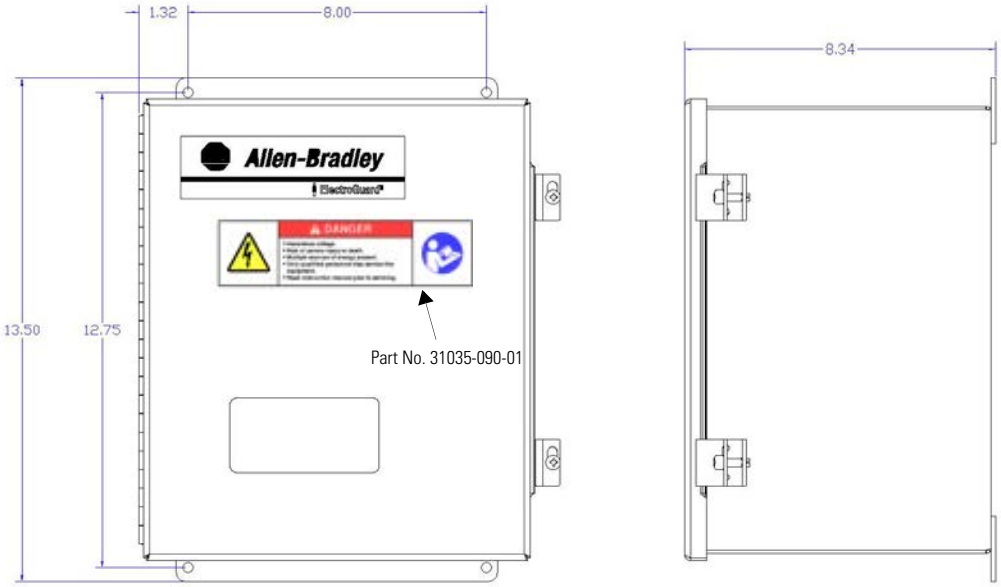

Note: Dimensions are in inches (mm). Dimensions are not intended for manufacturing purposes.

Figure 2.18
10-Port Expansion Module (Open Type)

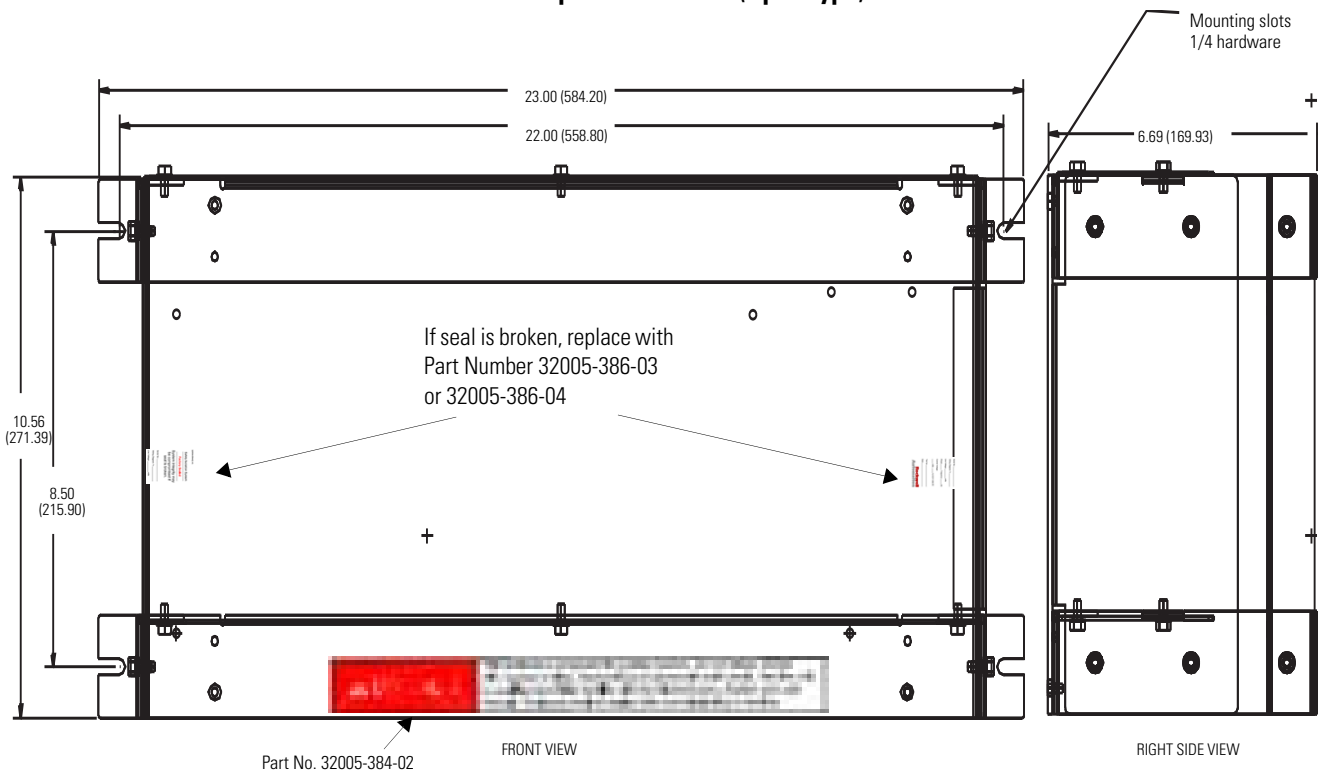

Note: Dimensions are in inches (mm). Dimensions are not intended for manufacturing purposes.

Figure 2.19
4-Port Expansion Module (Open Type)

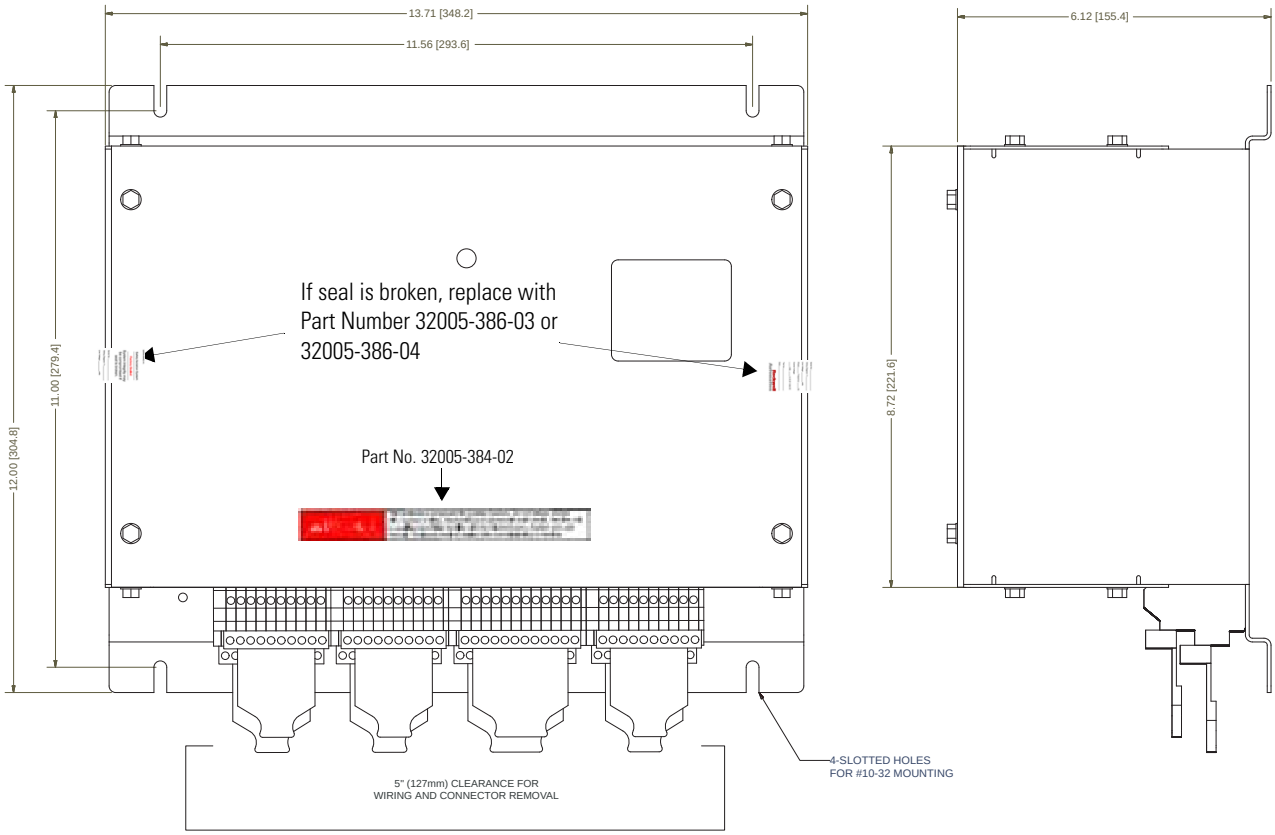

Note: Dimensions are in inches (mm). Dimensions are not intended for manufacturing purposes.

Figure 2.20
Pneumatic Isolation Module (in Type 12 Enclosure)

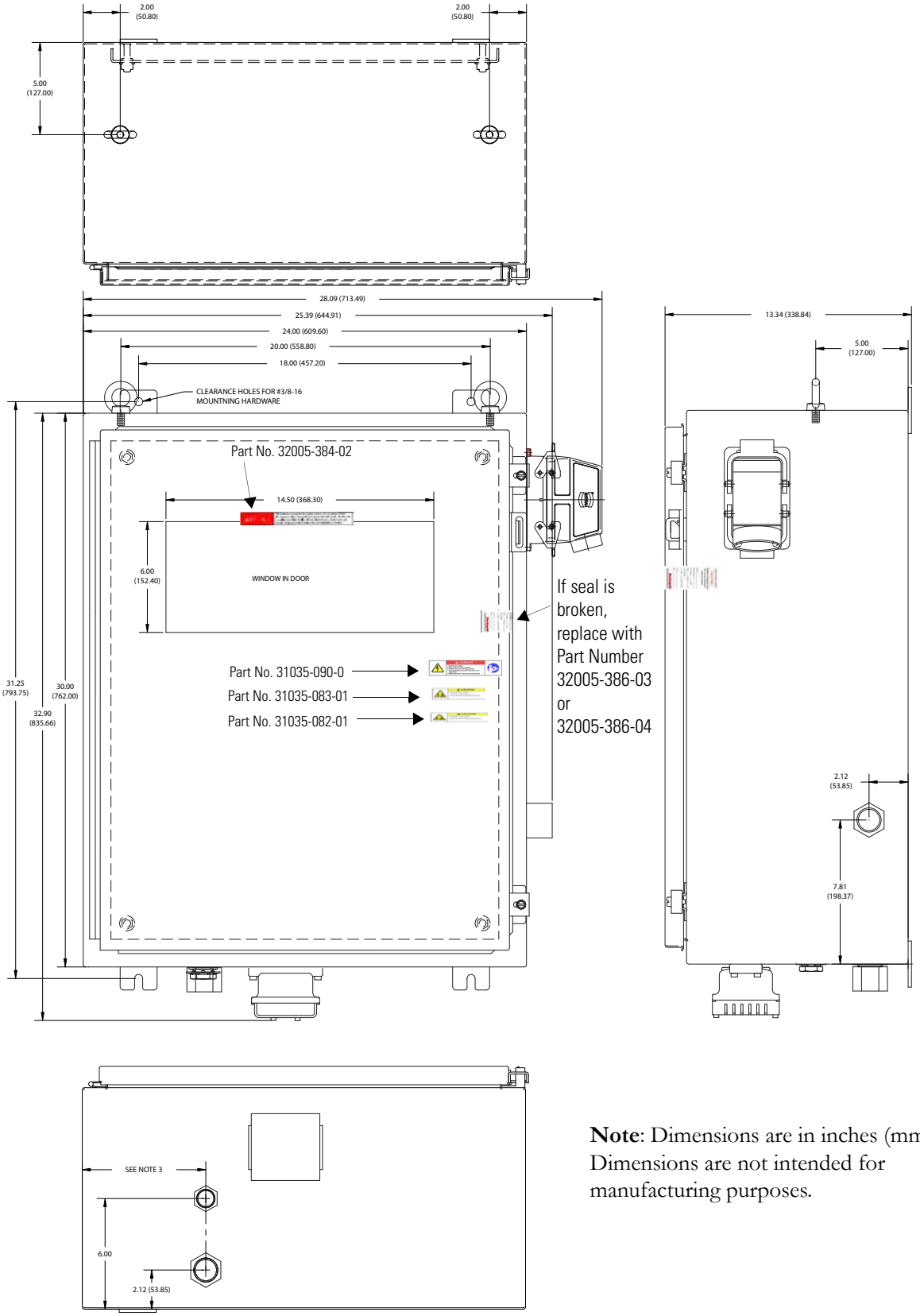

Note: Dimensions are in inches (mm). Dimensions are not intended for manufacturing purposes.

IMPORTANT Use flexible conduit and fittings when installing the external electrical plug provided with the module.

External pipe fittings are provided on the enclosure for customer connection to facility air piping.

IMPORTANT When installing air connections, the Pneumatic Module external pipe fitting must be held secure. Improper connections in internal fitting may become loose causing an air leak.

When making the hard-piped air connections to the air inlet and outlet fittings to the module, a clearance of 5 in. (12.5 cm) should be observed for ease of installation and module replacement, if necessary.

Approximate Weights

Table 2.3
Approximate Weights of ElectroGuard® Power Panels

Power Panel Ampere Rating	Without Disconnecting Means		With Disconnecting Means	
	Lbs.	Kg.	Lbs.	Kg.
23- 85 A	335	152	350	159
110 A	600	272	1050	476
180 A	650	295	1100	499
210 A	680	308	1150	522
300 A	725	329	1250	567
420 A	1100	499	2200	998
630 A	1250	567	2500	1134
860 A	1500	680	2650	1202
1200 A	1750	794	2780	1261

Table 2.4
Approximate Weights of ElectroGuard® Modules

System Component	Lbs.	Kg.
Remote Lockout Station	6	3
RLS NEMA 7/9	16	7
4-port Expansion Module w/o encl.	15	7
10-port Expansion Module w/o encl.	25	12
Pneumatic Isolation Module	135	62
Control Module	85	40
Verification Module	25	12

Receiving the ElectroGuard® Power Panel and Modules

Upon receipt, thoroughly inspect the packaging before accepting the shipment from the freight company. Any damage must be reported to the freight agent.

Should any concealed damage be found during unpacking, it is the responsibility of the user to notify the freight agent.

Storing the ElectroGuard® Power Panel and Modules

IMPORTANT The ElectroGuard® Power Panel and modules should remain on their shipping skids or in their shipping cartons until installation. If the equipment is not to be used for a period of time, it must be stored according to the following instructions in order to maintain warranty coverage:

- Store in a clean, dry location
- Store within an ambient temperature range of –10…+60°C (+14…+140°F).
- Store within a relative humidity of 5…95%, non-condensing.
- Do not store equipment where it could be exposed to a corrosive atmosphere.
- Do not store in a construction area.

ElectroGuard® Power Panel

1. Remove the ElectroGuard® SIS Power Panel from the shipping carton.
2. Visually inspect the enclosure for damage that may have occurred during shipment.
3. Open the enclosure door after loosening the door fasteners (see Figure 2.21 or 2.22). Look for damaged components, or wires that may have been disconnected during shipment.

IMPORTANT Use caution when opening the enclosure door. The unit may tip forward when the door is opened.

Figure 2.21
23...85 A Type 12 Enclosure with Optional Disconnecting Means

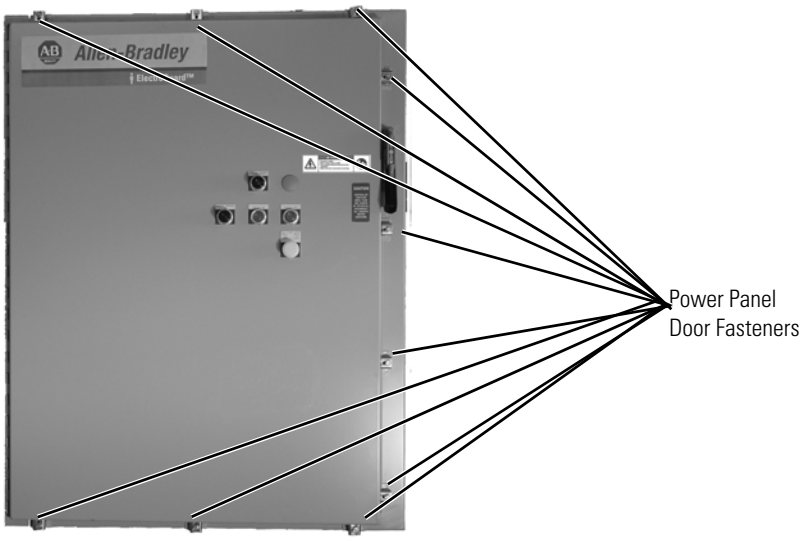

Figure 2.22
110...1200 A Type 12 Enclosure with Optional Disconnecting Means

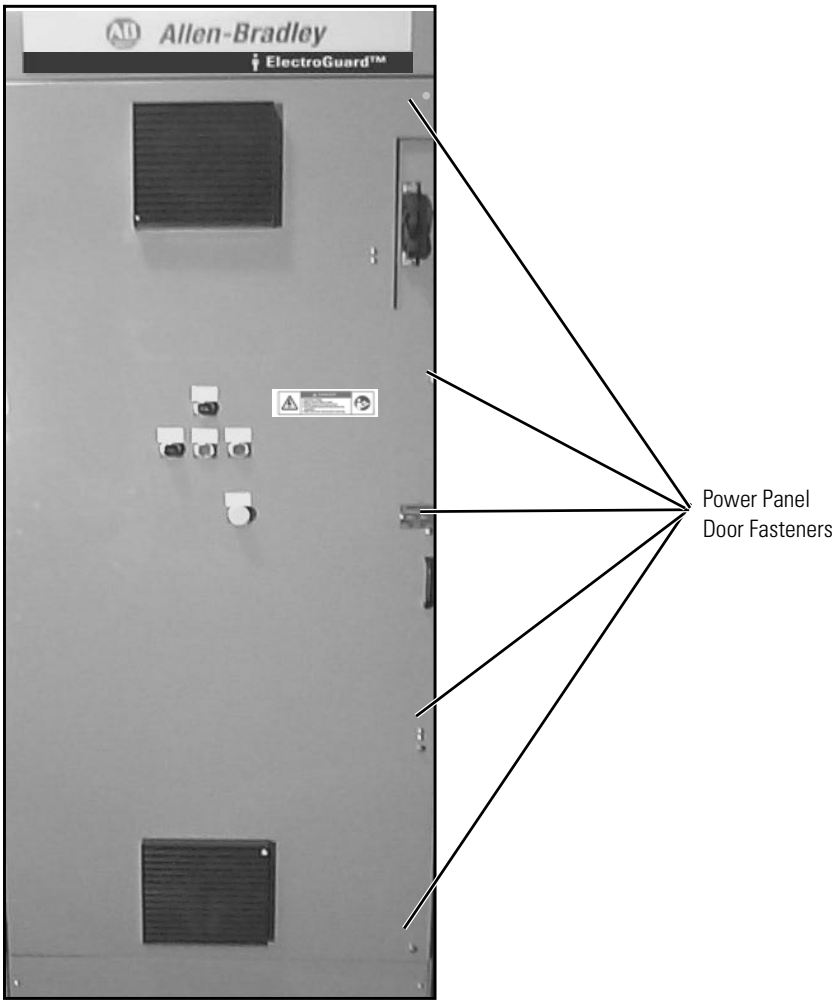

4. Check the ElectroGuard® Power Panel nameplate catalog no. (located on the middle right of the inside of the enclosure door) against the purchase order (see Figure 2.23).

Figure 2.23
ElectroGuard® Power Panel Nameplate

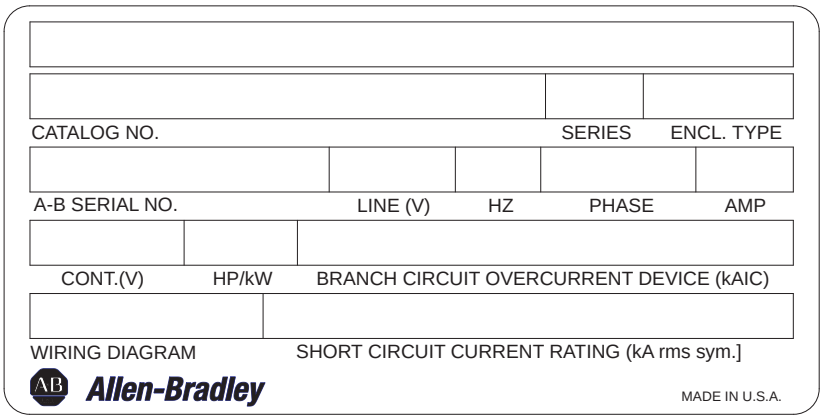

(Actual Size)

5. Check the document holder on the inside of the enclosure door to verify a document envelope was provided. If not, contact your local Rockwell Automation distributor.

Remote Lockout Station

1. Remove the RLS from the shipping carton.

2. Visually inspect the enclosure for damage that may have occurred during shipment.

ATTENTION

This is a safety device.

Altering, defeating or bypassing any module or component of the Safety Isolation System may result in personal injury, death, property damage, or economic loss.

Only qualified service technicians must perform service or maintenance.

3. Loosen the two screws holding the enclosure cover to the enclosure base (see Figure 2.24).

Figure 2.24
Bulletin 2030-RLSJW Type 12 Remote Lockout Station

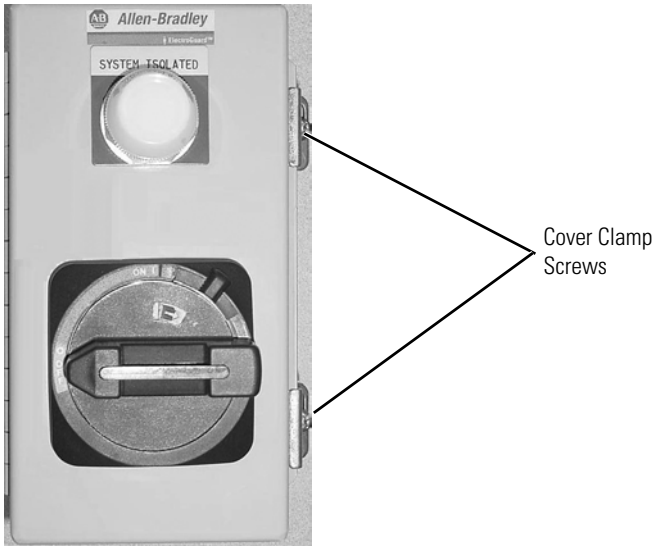

4. To open the RLS enclosure cover, rotate the operating handle to the OFF position. Squeeze the handle interlock lever and operating handle as in Figure 2.25. Lift the enclosure cover away from the base.

Figure 2.25
Opening a Remote Lockout Station

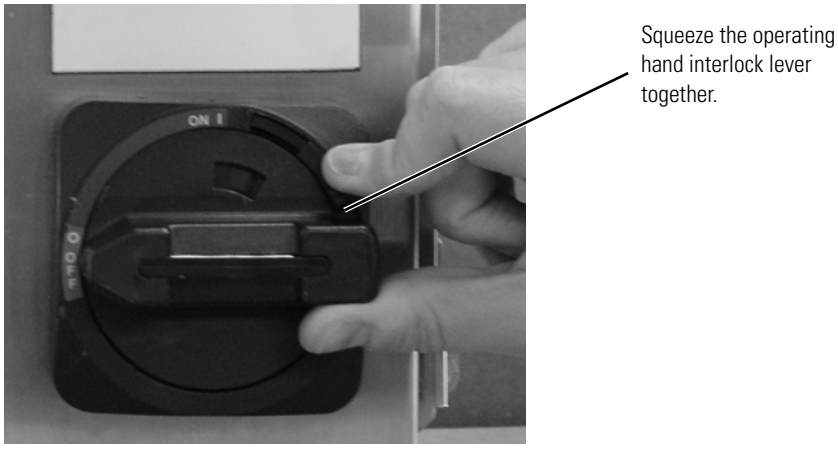

5. Look for damaged components or wires that may have been disconnected during shipment.

6. Verify the RLS nameplate catalog no. (located on the inside of the enclosure on the side surface) against the purchase order (see Figure 2.26).

Figure 2.26
Remote Lockout Station Nameplate

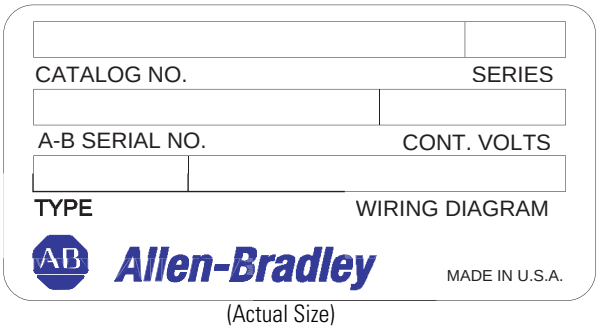

(Actual Size)

7. Refer to the documentation inside the RLS for the applicable wiring diagram.

8. Close the enclosure cover. With the operating handle in the OFF position, rotate the handle interlock lever clockwise and push the enclosure cover toward the enclosure base while holding the handle interlock lever. Release the handle interlock lever.

Verification Module (Optional)

1. Remove the Verification Module from the shipping carton

2. Visually inspect the enclosure for damage that may have occurred during shipping.

3. Open the enclosure door after loosening the door fasteners. Look for damaged components or wires that may have been disconnected during shipment.

4. Verify the nameplate catalog no. (located inside right of the enclosure door) against the purchase order (see Figure 2.28).

Figure 2.27 Verification Module Nameplate

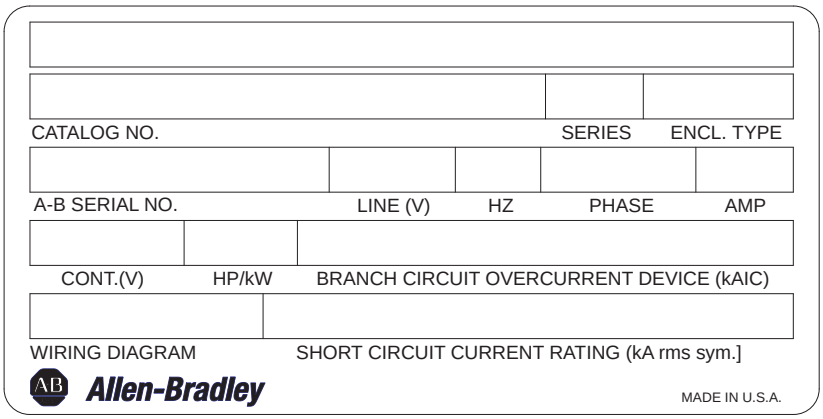

(Actual Size)

Expansion Module (Optional)

1. Remove the Expansion Module from the shipping carton.
2. Visually inspect the enclosure for damage that may have occurred during shipping.
3. Open the enclosure door after loosening the door fasteners. Look for damaged components or wires that may have been disconnected during shipment.
4. Remove the protective paper from the Expansion Module viewing window.
5. Verify the nameplate catalog no. (located on the front or right side of the equipment) against the purchase order (see Figure 2.28).

Figure 2.28
Expansion Module Nameplate

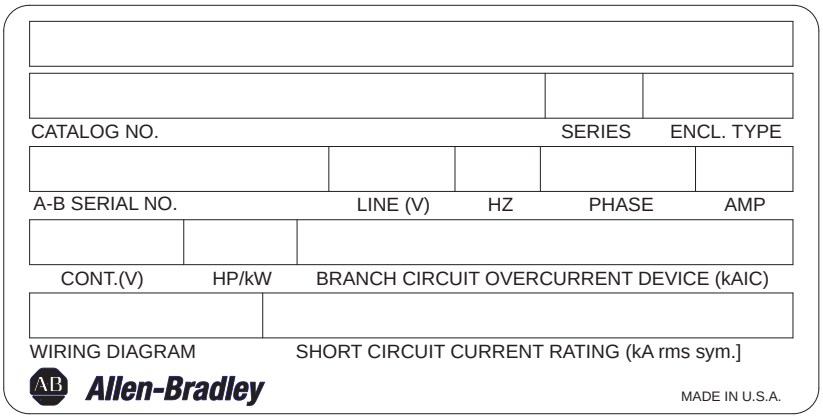

(Actual Size)

ATTENTION

ElectroGuard® system modules are factory sealed with a tamper-indicating seal. Altering, defeating, or bypassing any module or component of the Safety Isolation System may result in personal injury, death, property damage, or economic loss. Only qualified service technicians must perform service or maintenance. Resealing of the modules is the responsibility of the person or organization performing the service or maintenance.

Figure 2.29
Factory Seals on Expansion Module (Open Type)

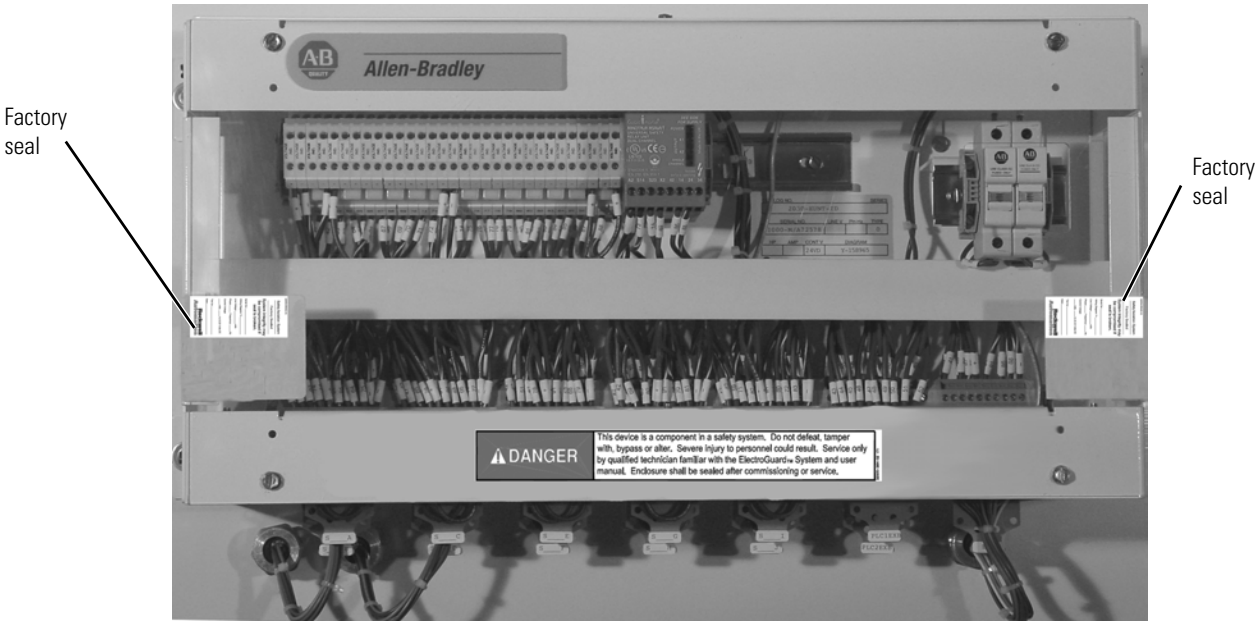

Pneumatic Isolation Module (Optional)

1. Remove the Pneumatic Isolation Module from the shipping carton.
2. Visually inspect the enclosure for damage that may have occurred during shipment.
3. Remove the adhesive protective paper from the enclosure viewing window.
4. Look through the module viewing window for damaged components or wires that may have been disconnected during shipment.
5. Check the nameplate catalog no. (located on the right side of the enclosure) against the purchase order (see Figure 2.30).

Figure 2.30
Pneumatic Isolation Module Nameplate

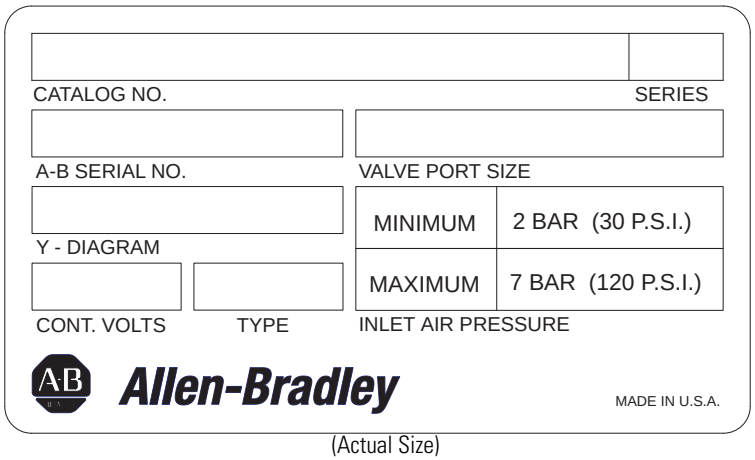

(Actual Size)

ATTENTION

ElectroGuard® system modules are factory sealed with a tamper-indicating seal. Altering, defeating, or bypassing any module or component of the Safety Isolation System may result in personal injury, death, property damage, or economic loss. Only qualified service technicians must perform service or maintenance. Resealing of the modules is the responsibility of the person or organization performing the service or maintenance.

Figure 2.31
Factory Seal on Pneumatic Isolation Module

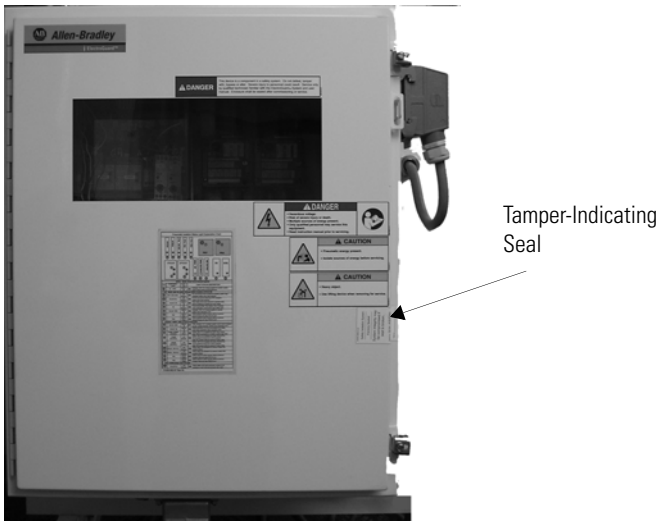

Installation and Wiring of the ElectroGuard® Power Panel

Overview

The ElectroGuard® Power Panel houses the Control Module, the isolation and grounding contactors, the control circuit transformer, and the system on/off push button operators, as well as the optional branch circuit protection and communications modules.

Installation of the Power Panel

ATTENTION

In order to help avoid serious injury or death, proper lifting techniques and equipment must be used when moving and installing the ElectroGuard®. The lifting means must be capable of lifting the weight of the panel.

IMPORTANT

The ElectroGuard® Safety Isolation System must be protected upstream by fuses or a thermal-magnetic circuit breaker. (The ElectroGuard® is available with fuse or circuit breaker branch circuit protection.) Size the upstream branch circuit short circuit protective device per applicable local codes

1. Verify that the power panel door is closed and fasteners securely tightened.

2. Secure the enclosure properly in its final location by using the enclosure mounting slots (see Figures 2.32, 2.33, and 2.34).

Figure 2.32
ElectroGuard® Power Panel External Mounting Feet (23…85 A)

ElectroGuard® Power Panel Upper Mounting Feet (Lower Mounting Feet Not Shown)

Figure 2.33
Floor Mounting of ElectroGuard® Single-door Power Panel (110…1200 A) (Top View)

MCC Style Enclosures Floor Mounting Hole Location (Front of Enclosure shown)

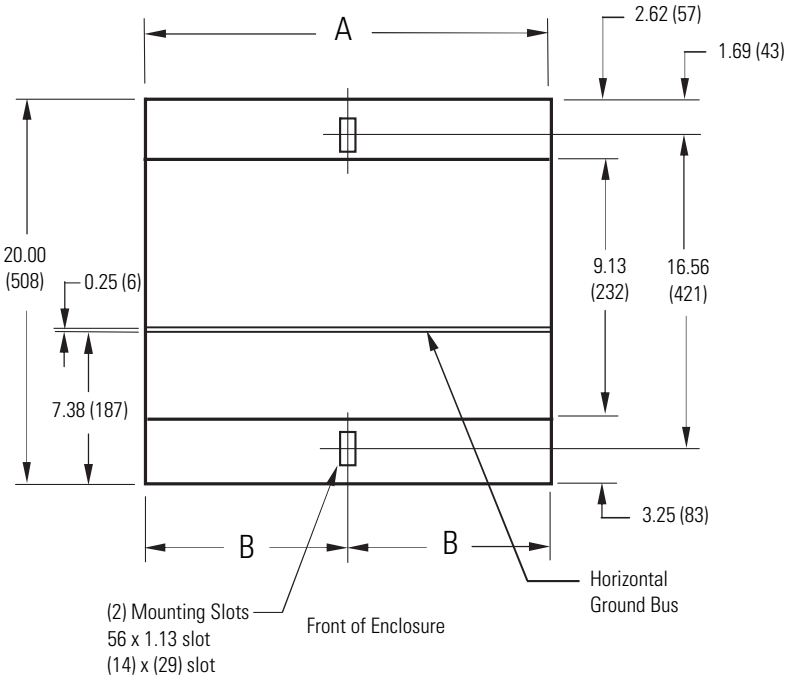

Dim.	20 in. Deep			
	20 in. Wide	25 in. Wide	30 in. Wide	35 in. Wide
A	20.00 (508)	25.00 (635)	30.00 (762)	35.00 (889)
B	10.00 (254)	12.50 (318)	15.00 (381)	17.50 (445)

Figure 2.34
Floor Mounting of ElectroGuard® Two-door Power Panel (110…1200 A)

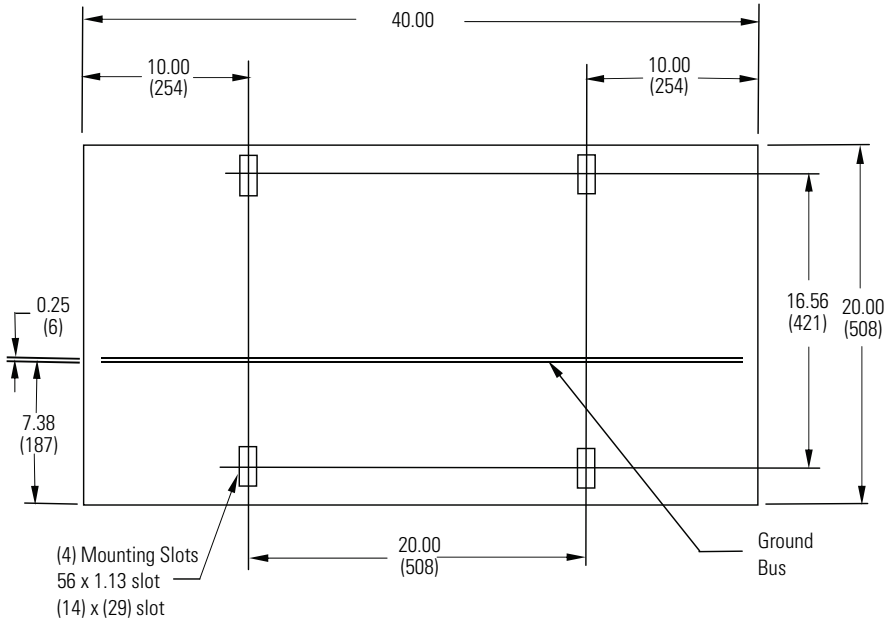

Note: Dimensions are in inches (mm). Dimensions are not intended for manufacturing purposes.

MCC Type enclosures wider than 40 in. consist of MCC section widths necessary to obtain the overall ElectroGuard® Power Panel width (see Table 2.5). The mounting dimensions will be as shown for the various MCC section widths in Figures 2.33 and 2.34.

Table 2.5
ElectroGuard® Power Panel Section Dimensions

Total Required Power Panel Width	Left Hand Section	Center Section	Right Hand Section
55 in.	35 in. Wide	—	20 in. Wide
60 in.	40 in. Wide	—	20 in. Wide
75 in.	35 in. Wide	—	40 in. Wide
105 in.	35 in. Wide	40 in. Wide	30 in. Wide
110 in.	35 in. Wide	40 in. Wide	35 in. Wide

Incoming and Outgoing Three-phase Cable Specifications

IMPORTANT

- Refer to applicable local codes and standards when selecting incoming and outgoing three phase power cables.
- Cable must have 75°C copper wire only.
- Cable with 600V insulation is required (or as specified by local codes).
- Oil-resistant cable is recommended.

Wiring of the Power Panel

IMPORTANT

The ElectroGuard® does not provide branch circuit protection unless ordered with the optional fused disconnect switch or circuit breaker. It is necessary to follow the requirements of regulatory agencies and local codes to select the circuit required for both line and load circuits.

- The enclosure is not provided with conduit entry holes.
- Use conduit and applicable environmentally-rated hub.
- After properly mounting the enclosure, then open the enclosure door.
- Follow the wiring diagram supplied.

For Bulletin 2031 Non-Combination Systems

1. Connect the incoming power wires to the L1-L2-L3 terminals of the 1IC Contactor or factory-supplied power block (see Figures 2.35 and 2.36). For units with a BUS, refer to the schematic.

Figure 2.35
Incoming Power Connections on Power Block (23…85 A)

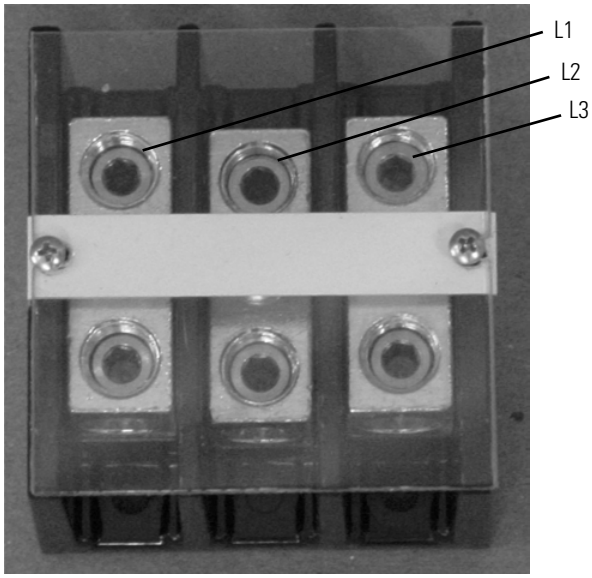

Figure 2.36
Incoming Power Connections on Power Block (110…860 A, Optional)

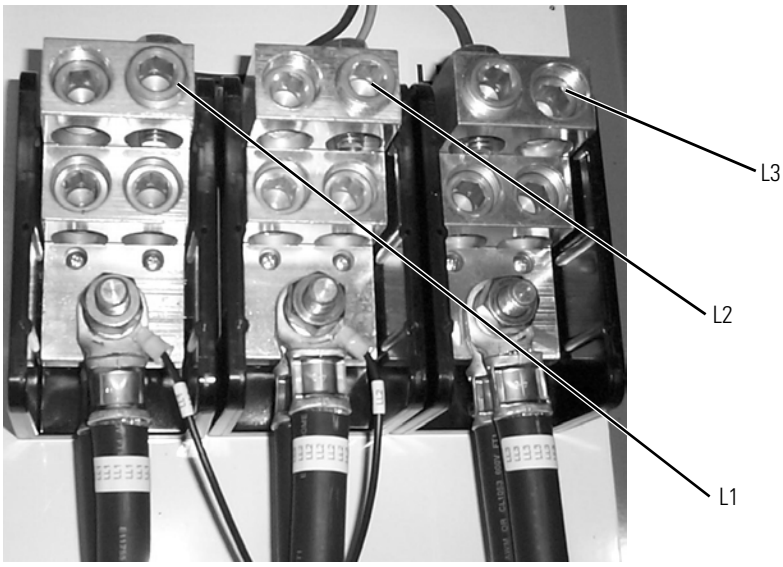

2. Connect the load to terminals T1-T2-T3 of the ElectroGuard® isolation contactor 2IC (see Figures 2.37 and 2.38).

Figure 2.37
Outgoing Power Connections to 2IC Contactor (110…1200 A)

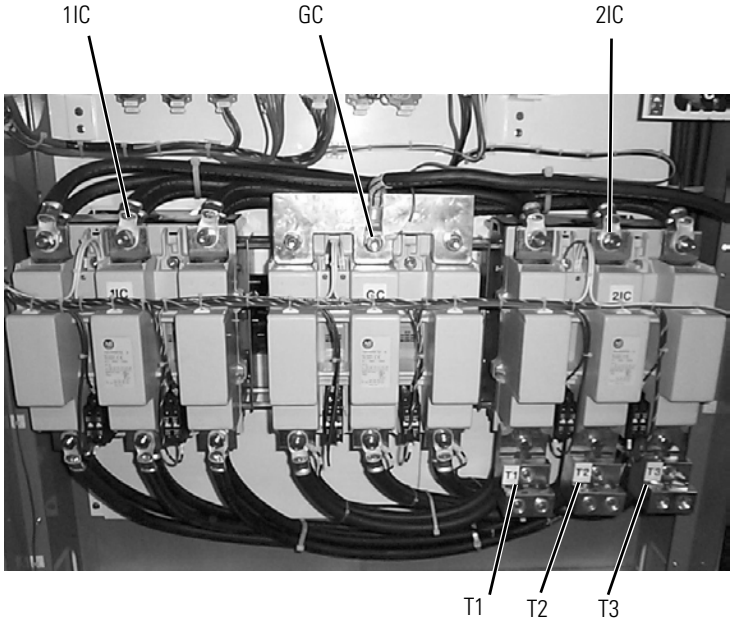

Figure 2.38
Outgoing Power Connections to 2IC Contactor (23…85 A)

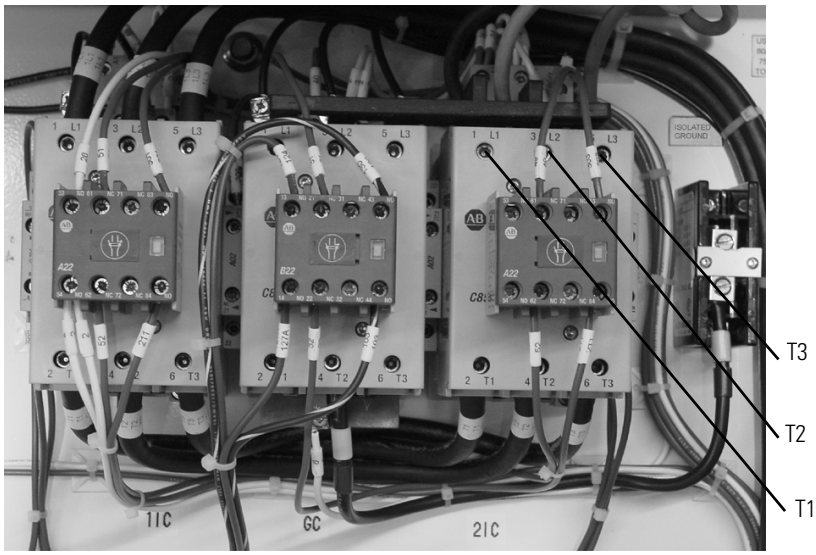

3. Connect a properly sized ground conductor to the Protective Earth (P.E.) terminal (see Figures 2.39 and 2.40, and Table 2.6).

Figure 2.39
Equipment Ground Conductor (P.E.) Lug (110…1200 A)

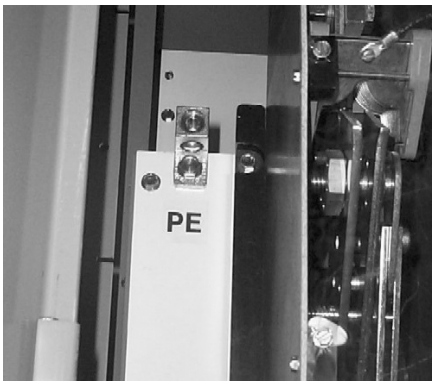

Figure 2.40
Equipment Ground Conductor (P.E.) Lug (23…85 A)

4. Connect a properly sized ground conductor to the isolated ground terminal block (see Figures 2.41 and 2.42, and Table 2.6).

Figure 2.41
Isolated Ground Terminal Block (110…1200 A)

Figure 2.42 Isolated Ground Terminal Block (23…85 A)

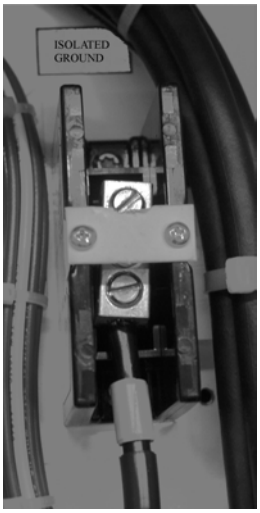

IMPORTANT The Isolated Ground Conductor must not be connected to conduit on any panel board it passes through and must be connected directly to distribution earth ground at the point where all grounds are bonded together.

For Bulletin 2032 or 2033 Combination Systems

1. Connect the incoming power wires to terminals L1-L2-L3 of the disconnect switch (or circuit breaker) (see Figures 2.43, 2.44, and Table 2.6).

Figure 2.43
Incoming Power Connections on Fusible Disconnect Switch (Bulletin 2032)

Figure 2.44
Incoming Power Connections to Circuit Breaker (Bulletin 2033)

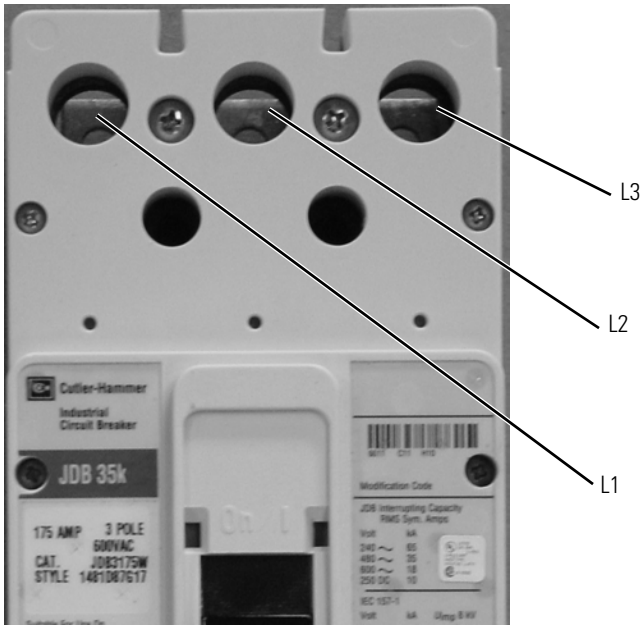

2. Connect the load to terminals T1-T2-T3 of the ElectroGuard® isolation contactor 2IC (see Figures 2.45 and 2.46, and Table 2.6). For units using a BUS, refer to the schematic.

Figure 2.45
Outgoing Power Connection Points on 2IC Isolation Contactor (110… 1200 A, without BUS)

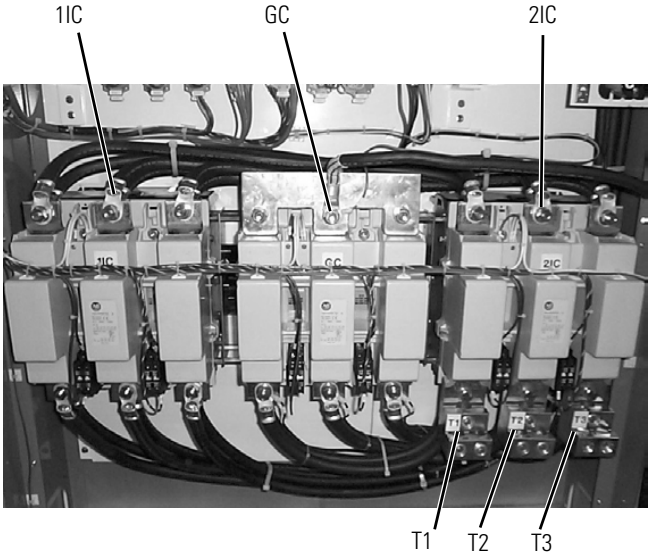

Figure 2.46
Outgoing Power Connections to 2IC Contactor (23… 85 A)

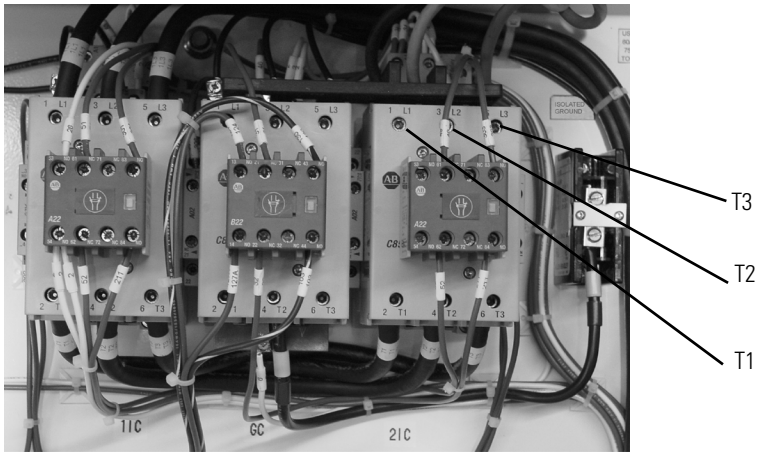

3. Torque the incoming and outgoing power wire terminals to the values shown on the torque label located inside the enclosure

4. Connect the applicable-sized ground conductor to the P.E. (Protective Earth) ground lug (see Figures 2.39 …2.40).

IMPORTANT The Isolated Ground Conductor must not be connected to conduit on any panel board it passes through and must be connected directly to distribution earth ground at the point where all grounds are bonded together.

Table 2.6
Power Connection Specifications for Torque (see Table on Power Panel Door)

Field Cable Connections (Torque -75°C Copper Wire Only)						
			Cable Size			
Connection Point	Function	Connection Point Designator	Current Rating	Line Voltage*	Circuit Breaker Rating*	AWG
1IC Isolation Contactor or 2IC Isolation Contactor	Incoming Power Connection or Outgoing Power Connection to Machine	L1, L2, L3 or T1, T2, T3	23 A			#16-10
			43 A			#14-4
			85 A			#14-1
			110 A			#6-300 MCM
			180 A			#6-300 MCM
			210 A			(2) #4-350 MCM
			300 A			(2X) #4-350 MCM
			420 A			(2X) #4-350 MCM
			630 A			(2X) 2/0-500 MCM
			860 A			(4X) 2/0-500 MCM
			1200 A			(4X) 3/0-750 MCM
Incoming Power Terminal Block Bulletin 2031	Incoming Power Connection	L1, L2, L3	23 A			#14-2/0
			43 A			#14-2/0
			85 A			#14-2/0
			110 A			#14-2/0 (optional)
			180 A			#6-350 MCM (optional)
			210 A			#6-350 MCM (optional)
			300 A			(2X) #4-500 MCM (optional)
			420 A			(2X) #4-500 MCM (optional)
			630 A			(4X) #4-600 MCM
			860 A			(4X) #4-600 MCM
			1200 A			(4X) 3/0-750 MCM
Fusible Disconnect Bulletin 2032	Branch Circuit Protection	L1, L2, L3	23 A			#14-8
			43 A			#14-4
			85 A			#8-1/0
			110 A			#6-250 MCM
			180 A			(2X) 1/0-250 MCM
			210 A			(2X) 1/0-250 MCM
			300 A			(2X) 1/0-250 MCM
			420 A			(2X) #4-600 MCM
			630 A			(2X) #6-350 MCM
			860 A			(4X) #6-350 MCM
			1200 A			(4X) #4-600 MCM

Field Cable Connections (Torque -75°C Copper Wire Only)						
			Cable Size			
Connection Point	**Function**	**Connection Point Designator**	**Current Rating**	**Line Voltage***	**Circuit Breaker Rating***	**AWG**
Circuit Breaker Bulletin 2033	Branch Circuit Protection	L1, L2, L3	23 A	H, A, B, C	39-42	#14-1/0
			43 A	H, A, B, C,	40-45	#14-1/0
			85 A	H	42	#14-1/0
				H, A	43-45	#4-4/0
				B	46	#14-1/0
				B	47	#4-4/0
				B, C	48	#4-350 MCM
				C	46-47	#14-1/0
			110 A	H, A, B, C	45, 46, 49, 50	#4-350 MCM
			180 A	H, A, B, C	47, 48 50-52	#4-350 MCM
			210 A	H	48	#4-350 MCM
				A, C	49, 53-54	250-500 MCM
			300 A	H	49	250-500 MCM
				H, A	50-51	(2X) 400-500 MCM
				B	53-54	250-500 MCM
				B	56	(2X) 400-500 MCM
				C	56	250-500 MCM
				C	57	(2X) 400-500 MCM
			420 A	H, A, B, C	51, 52, 57-59	(2X) 400-500 MCM
				A	53	(2X) 2/0-500 MCM
			630 A	H	53	(2X) 2/0-500 MCM
				H	54	(3X) 3/0-500 MCM
				A	54	(2X) 2/0-500 MCM
				A	56	(3X) 3/0-500 MCM
				B	59-60	(2X) 2/0-500 MCM
				B	61	(3X) 3/0-500 MCM
				C	60	(2X) 400-500 MCM
				C	61	(2X) 2/0-500 MCM
				C	62	(3X) 3/0-500 MCM
			860 A	H, A, B, C	56, 57, 62, 63	(3X) 3/0-500 MCM
			1200 A	H, A, B, C	57-60, 66	(4X) #1-600 MCM
Equipment Ground Lug (P.E.)	Chassis Ground/Protective EartH	P.E.	23…85 A			#14–4
			110…420 A			#8-1/0
			630…1200 A			#6 – 250 MCM
Isolated Ground Conductor Terminal Block	Isolated Ground Conductor Connection	Isolated Ground Terminal Block	23 – 210 A			#14 – 2
			300 – 1200 A			#6 – 250kcmil
Control Module Connector Plugs	Input and Output Connections for Control Module	RLS1 – RLS6, IP1 – IP4, ZB, HP1 & HP2, FB1 & FB2				#18 – 14
Communication Modules: 1COM-3COM 1DNET-3DNET 1CNET-3CNET	Control Voltage Source	L				#14 – 6
		N				#22 – 10
	Input Module	G				#22 – 10
		0 – 15	.			#12 Max
Pneumatic Module Connector Plug	Interface with Control Module	External Connector Plug HC				#14 Max.
1492-FB1 Fuse Holders	Communication Module Power Supply Protection	1FU, 2FU				#14-6
Remote Lockout Station	Interface with Control Module	RLS Internal Terminal Block				#18 -14

NOTE: For installation instructions see Publication No. 2030-UM002A-EN-P.

* See Appendix A for catalog explanations.

Installation and Wiring of the ElectroGuard® Control Module

Overview

The ElectroGuard® Control Module is an essential sub-assembly of the ElectroGuard® Safety Isolation System. This module contains the relay logic necessary for the operation of the system, and provides the connectors for the Remote Lockout Stations, the Pneumatic Isolation Module (optional), the time delay option, and the system status signals for customer wiring to a remote PLC. See Table 2.7 for Control Module connector information.

ATTENTION

ElectroGuard® system modules are factory sealed with a tamper-indicating seal. Altering, defeating, or bypassing any module or component of the Safety Isolation System may result in personal injury, death, property damage, or economic loss. Only qualified service technicians must perform service or maintenance. Resealing of the modules is the responsibility of the person or organization performing the service or maintenance.

Table 2.7
Control Module Table of Connectors

Connector	Description	Function	23…85 A	110…1200 A
RLS1	Remote Lockout Station #1 connection	Connects Remote Lockout Station to Control Module	X	X
RLS2	Remote Lockout Station #2 connection	Connects Remote Lockout Station to Control Module	X	X
RLS3	Remote Lockout Station #3 connection	Connects Remote Lockout Station to Control Module	X	X
RLS4	Remote Lockout Station #4 connection	Connects Remote Lockout Station to Control Module	X	X
RLS5	Remote Lockout Station #5 connection	Connects Remote Lockout Station to Control Module	—	X
RLS6	Remote Lockout Station #6 connection	Connects Remote Lockout Station to Control Module	—	X
HP1, HP2	Pneumatic Module	Control and status interface with optional Pneumatic Isolation Module	X	X
HV	High Voltage	Line, load, and ground (P.E.) inputs for Control Module	X	X
IP1	On/Off	Interface with door mounted push buttons and pilot lights	—	X
IP1	Control Stop	Optional Control Stop (control module with Time Delay)	X	—
IP2	PLC	Provide system status output signals to customer PLC or optional Remote I/O	X	X
IP3	Interconnect	Contactor coils and auxiliary contact input and outputs	X	X

Table 2.7
Control Module Table of Connectors

IP4	Control stop	Optional control stop (Expansion Module with time delay)	X	—
ZB	Power contactor auxiliary contact status interface	Connects mirror contacts on contactors for safety relay monitoring of contactor status	—	X
FB1, FB2	Control Stop	Optional Control Stop (Control Module with Time Delay and Expansion Modules with Time Delay)	—	X

Connectors RLS1 through RLS6, IP1,IP2, HP1, HP2 and IP4 and ZB will require field wiring. Connectors IP3, HV, FB1, and FB2 are wired at the factory (see Figures 2.47 and 2.48).

Figure 2.47
Location of 23...85 A Connectors in Control Module (bottom view)

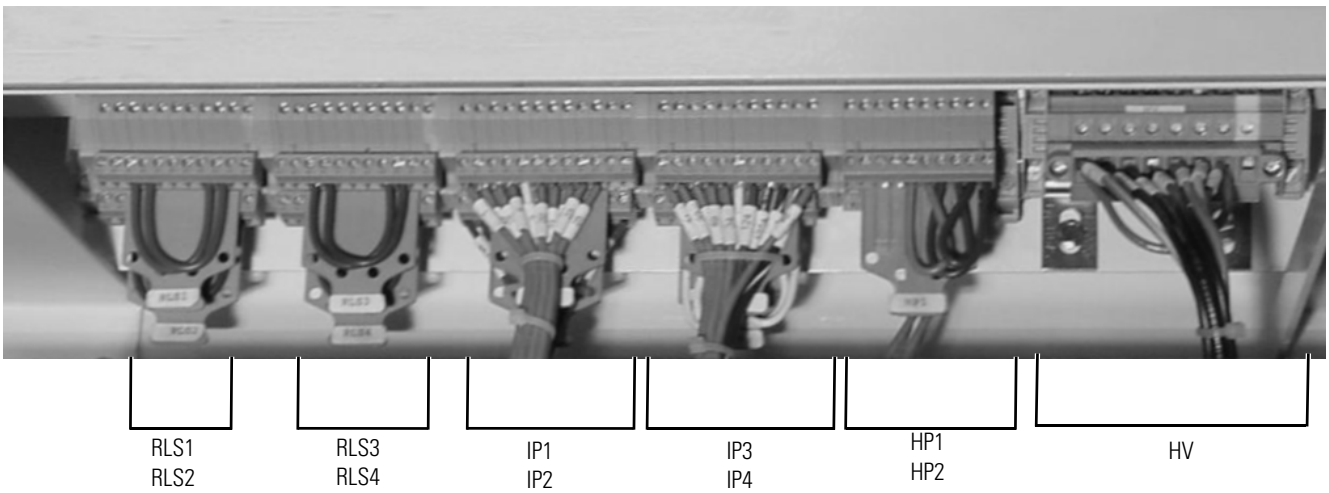

Figure 2.48
Location of 110...1200 A Connectors in Control Module (bottom view)

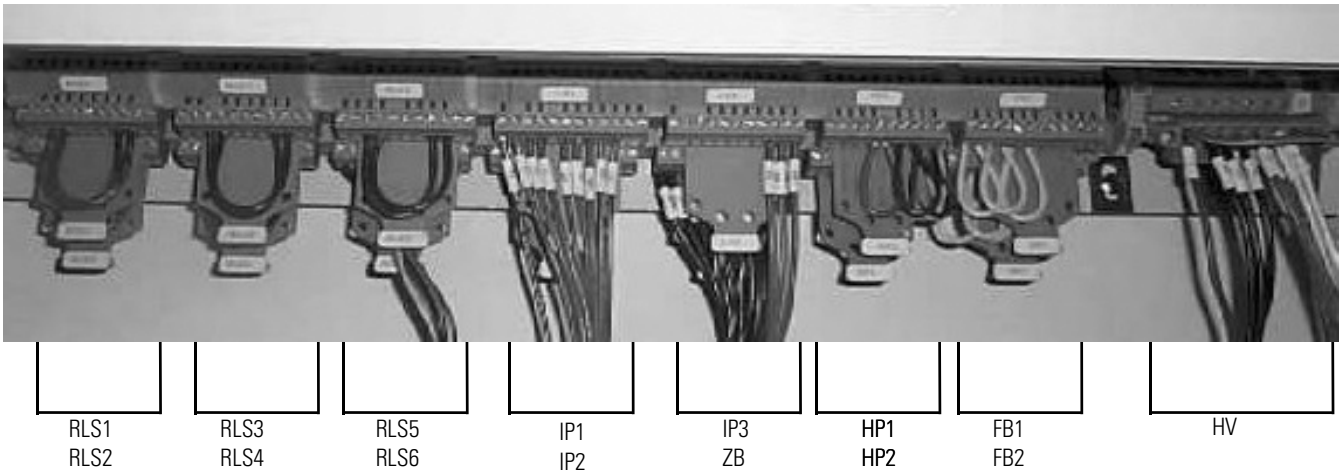

With the exception of the HV connector, all other connectors at the Control Module are "keyed" in order to uniquely identify each connector, in the event they will be removed and re-inserted. (See Figure 2.49).

Figure 2.49
Keying of the Connectors at the Control Module (23…1200 A) (110…1200 A only in gray)

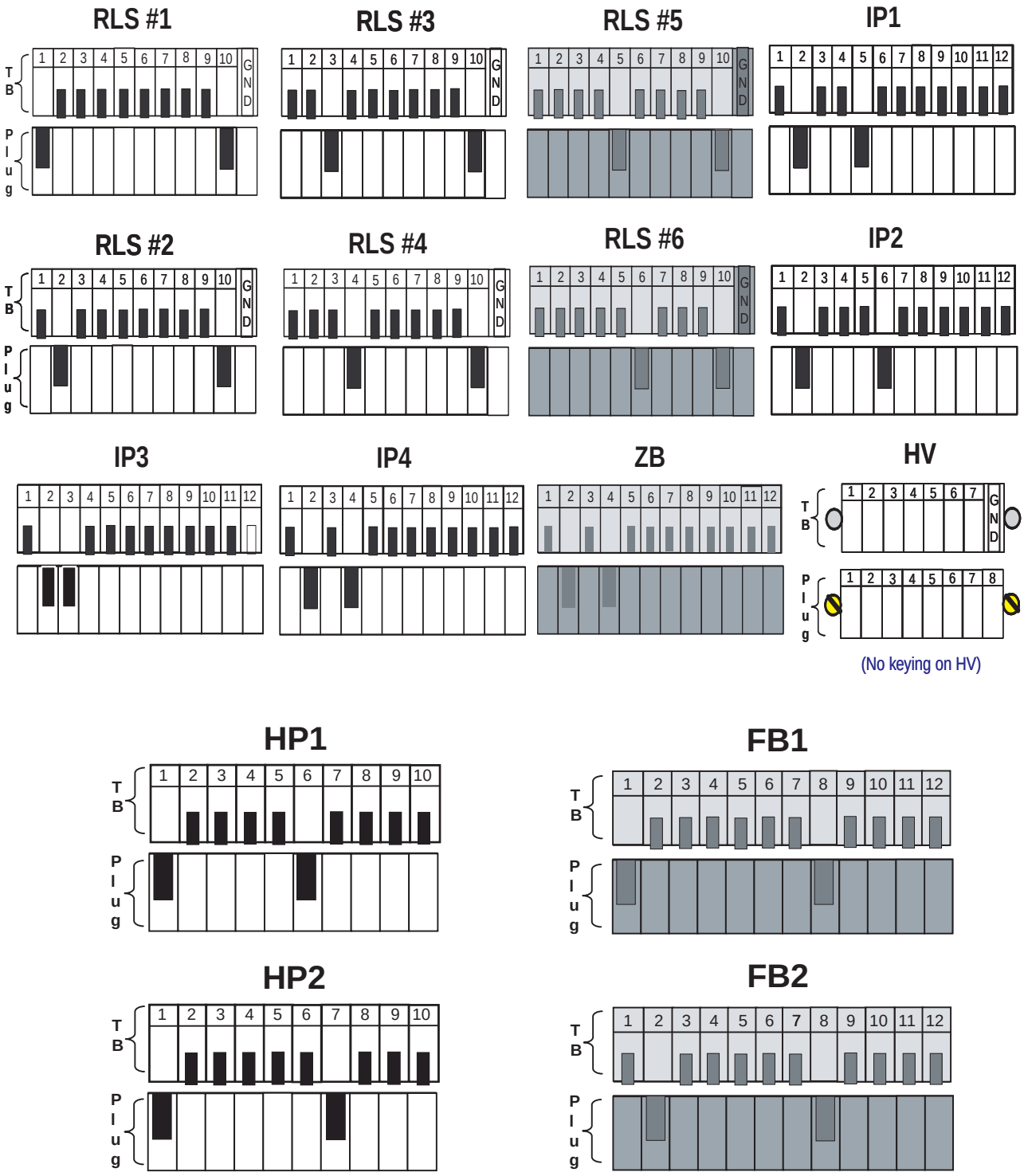

Figure 2.50
Control Module Factory Seals (23…85 A)

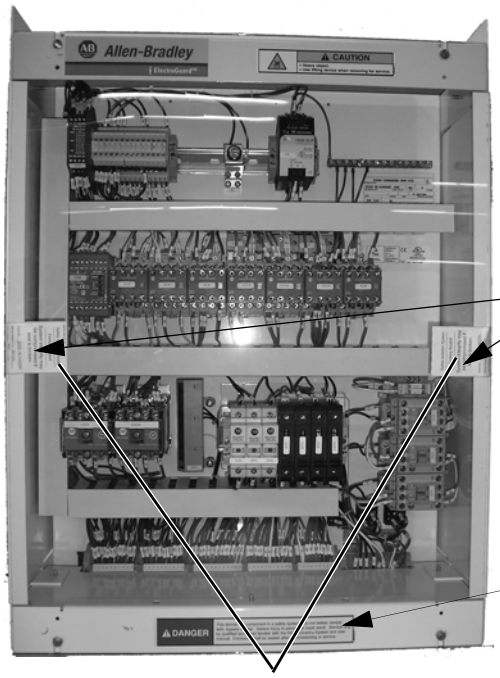

Tamper-indicating seal
Factory seal
#32005-386-02
OR
Rockwell field seal
#32005-386-03
OR
customer seal
#32005-386-04

Part number 32005-384-02

Control Module Factory Seals

Figure 2.51 Control Module Factory Seals (110…1200 A)

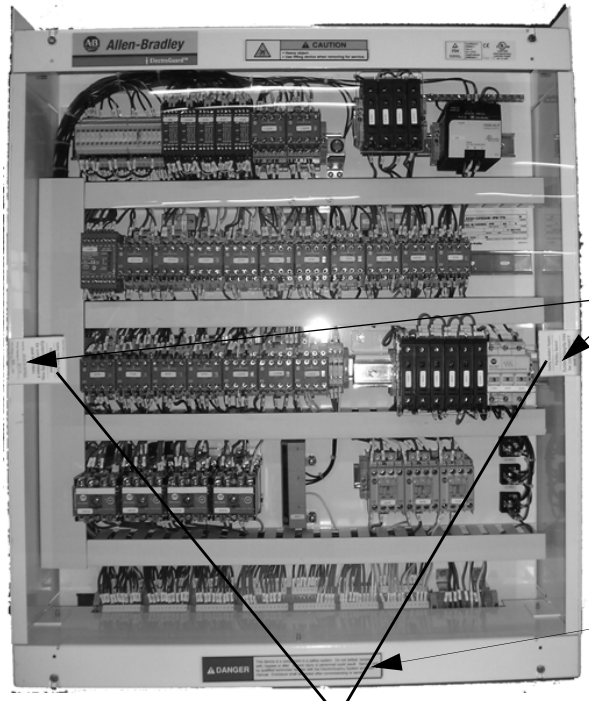

Tamper-indicating seal
Factory seal
#32005-386-02
OR
Rockwell field seal
#32005-386-03
OR
customer seal
#32005-386-04

Part number 32005-384-02

Control Module Factory Seals

Wiring the Remote Lockout Stations to the Control Module (RLS1…RLS6 Connectors)

The four (23… 85 A) or six (110… 1200 A) Remote Lockout Stations supported by the ElectroGuard® must be wired to the RLS1…RLS6 connector plugs in the Control Module (see Figure 2.52).

Figure 2.52
Remote Lockout Station Wiring to the Control Module

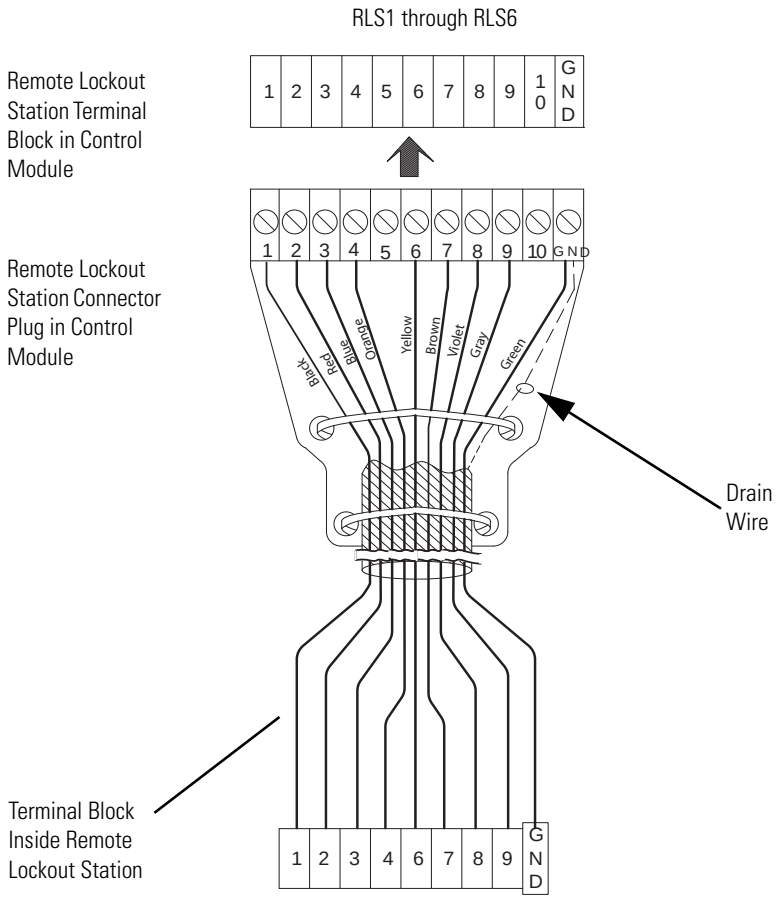

IMPORTANT The Control Module in the ElectroGuard® Power Panel has connectors to accommodate six (110… 1200 A) Remote Lockout Stations (four in the 23... 85 A models). The unused Remote Lockout Station connectors must have jumper wires installed.

Jumper wire plugs are factory installed.

If removing a Remote Lockout Station after it is installed, the jumpers in Figure 2.53 must be installed.

Figure 2.53
Jumper Wire Installation for Unused Remote Lockout Station Connection Plug

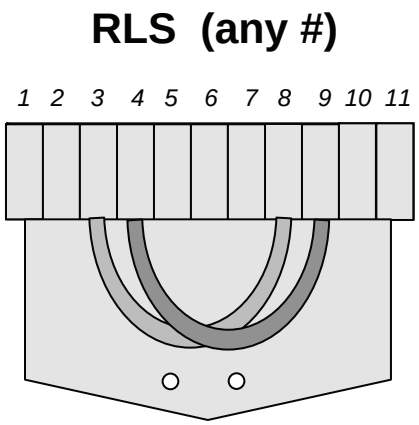

IMPORTANT

If an installation requires more than four (23… 85 A) or six (110… 1200 A) Remote Lockout Stations, Expansion Module(s) can be used to increase the total number of the Remote Lockout Stations to a maximum of 40 on 23… 85 A or 60 on 110… 1200 A.

(See Appendix D of this manual for maximum cable length and number of Remote Lockout Stations.

Wiring the Control Module with Pneumatic Ready Option

The ElectroGuard® can be ordered with the Pneumatic ready option. The HP1 and HP2 connectors interface the Control Module to the Pneumatic Isolation Module. When the connection to the Pneumatic Isolation Module is not needed, jumper wires must be installed on the HP1 connector in the Control Module. See Table 2.8 and Figure 2.54 for jumper information:

Figure 2.54
Jumper Wire Installation on Connector "HP1" When the Optional Pneumatic Isolation Module is Not Used

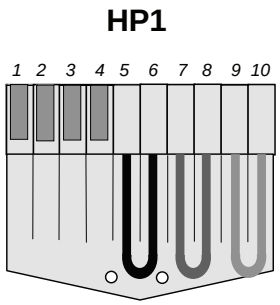

Table 2.8
Pneumatic Isolation Module Jumper

Connector	Connection Points	Recommended Wire
HP1	5 and 6	#16 AWG/1.3 mm^2 red
	7 and 8	#16 AWG/1.3 mm^2 blue
	9 and 10	#16 AWG/1.3 mm^2 blue

For wiring the Pneumatic Isolation Module, see Installation and Wiring of the ElectroGuard® Pneumatic Isolation Module on page 2-72

Wiring the Control Module with Time Delay Option (IP1 or FB1 Drive Control Stop Connector)

IMPORTANT The optional status Communication Modules allow a remote PLC to monitor the ElectroGuard® Safety Isolation System.

The Control Module with time delay feature may be used in applications where the machine or process requires a controlled stop. The time delay feature provides a set of contacts, which can be wired in series with the 2-wire or 3-wire control of a drive or system. After the operating handle of the RLS has been moved to the OFF position, the "DRIVE CONTROL STOP" contacts open, and 1…30 seconds later, isolation of the power bus occurs. Adjustment of this time delay is accomplished by adjusting 2TR and 3TR in the Control Module of the 110… 1200 A units and on 1IC and 2IC of the 23… 85 A units.

IMPORTANT The adjustment on two timers must be within two seconds of each other. If not, the system isolated light will not come on when the RLS is switched.

If the machine or process is not shut down before switching the RLS to the OFF position, this option provides a redundant means of performing the controlled stop function.

In the 23... 85 A models, the drive control stop connector is labeled IP1. In the 110... 1200 A models, the drive control stop connector is labeled FB1. See Figure 2.55 for a typical two-wire control scheme and Figure 2.56 for a typical three-wire control scheme. See Figure 2.57 or 2.58 for wiring to the Drive Control Stop connector.

Figure 2.55
Typical 2-Wire Control Scheme with "DRIVE CONTROL STOP" Function from Control Module with Optional Time Delay

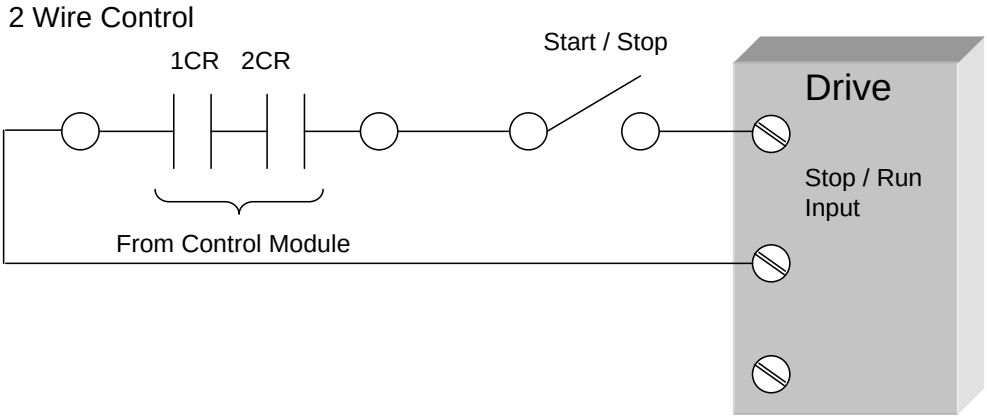

Figure 2.56
Typical 3-Wire Control Scheme with "DRIVE CONTROL STOP" Function from Control Module with Optional Time Delay

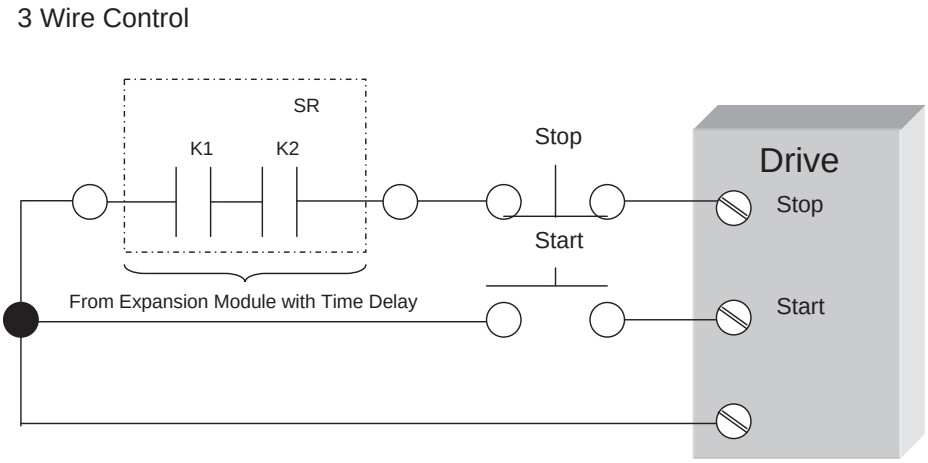

Figure 2.57
(23…85 A) Wiring to the IP1 Control Stop Connector

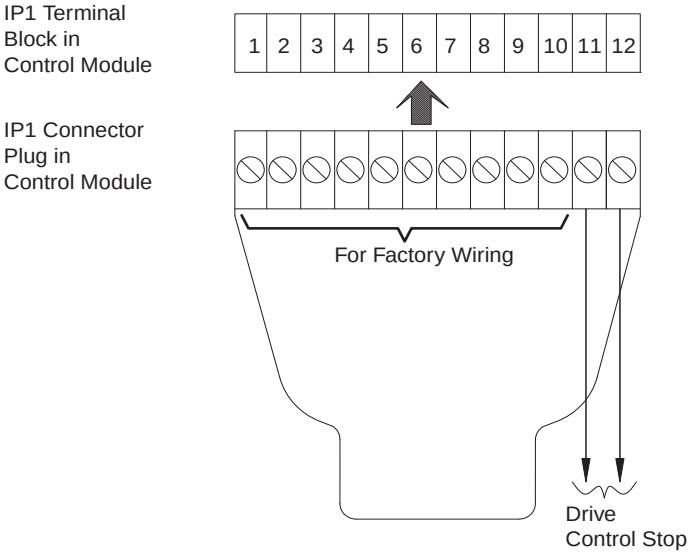

Figure 2.58
(110…1200 A) Wiring to Connector FB1 for a Drive Control Stop Connector

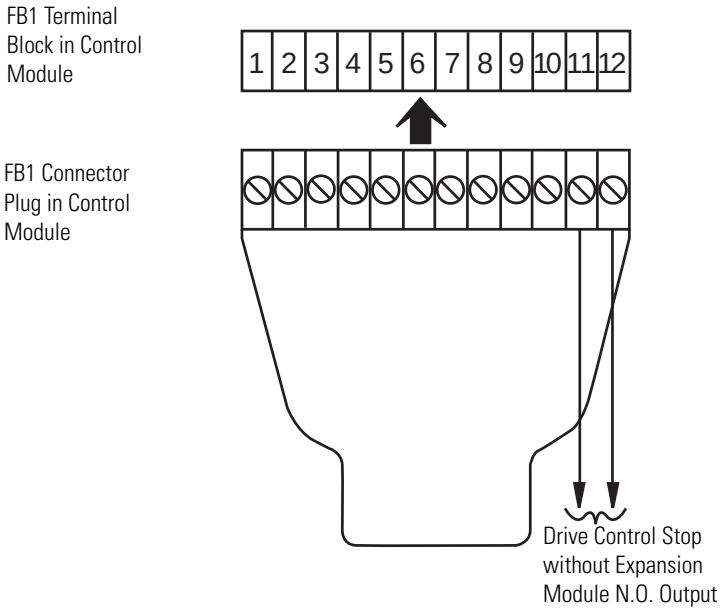

Wiring the RLS and System Status Signals (IP2 connector)

The Control Module provides status signals for the Safety Isolation System and for each of the Remote Lockout Stations (RLS) connected to the module.

The RLS status signals are provided via auxiliary contacts from the RLS. When the RLS switch is in the OFF position, the auxiliary contact will be open. Conversely, when the RLS switch is in the ON position, the auxiliary contact will be closed.

The Safety Isolation System status signal is provided via a series connection of an auxiliary contact from 1IC and 2IC. When the RLS switch is in the OFF position, the auxiliary contacts for 1IC and 2IC will be open. When the RLS switch is in the ON position, the auxiliary contacts for 1IC and 2IC will be closed.

These status signals can be wired to a customer-supplied control, or to the optional Communication Modules installed in the ElectroGuard® Power Panel.

IMPORTANT The optional status Communication Modules allow a remote PLC to monitor the ElectroGuard® Safety Isolation System.

ATTENTION Hazardous voltage or other forms of energy could be present. To avoid serious injury or death:

The Communication Module can be powered from a source external to the ElectroGuard®.

See Figure 2.59 or 2.60 for wiring to the IP2 connector in the Control Module. See *Installation and Wiring of Status Communication Modules* on page 2-73.

Figure 2.59
(23…85 A) ElectroGuard® Status Signals/Wiring to the IP2 Connector

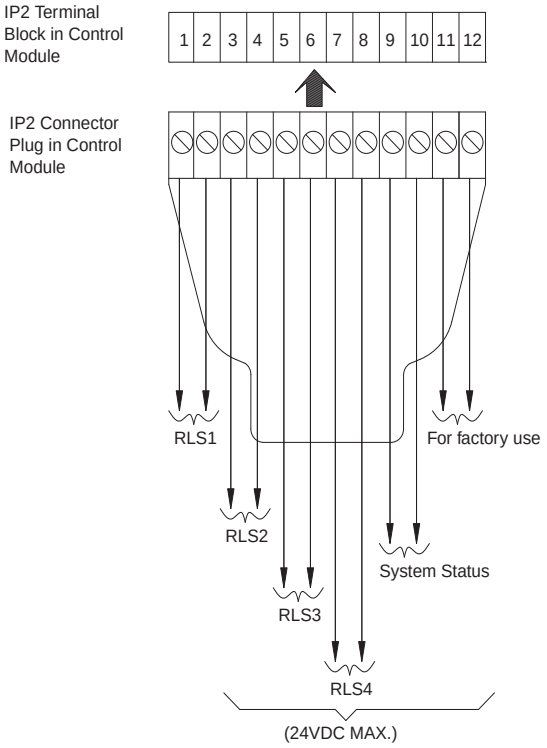

Figure 2.60
110…1200 A ElectroGuard® Status Signals/Wiring to the IP2 Connector

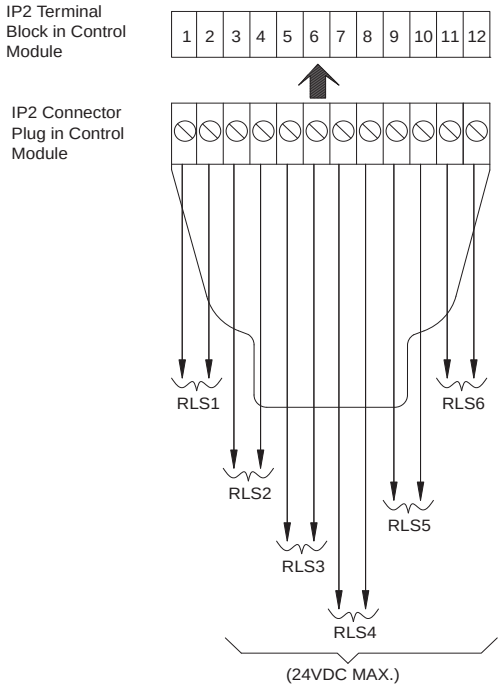

Installation and Wiring of the ElectroGuard® Remote Lockout Station(s)

Overview

The Remote Lockout Station (RLS) is a rotary operated, enclosed switch with a System Isolated verification light and operating handle that can be locked in the OFF position to provide Lockout/Tagout. The Remote Lockout Station is used to initiate the isolation sequence simultaneously in two separate ElectroGuard® units by sending a signal to the Control Module.

Remote Lockout Station Cable Specifications

IMPORTANT

- Cable must have copper conductors only.
- Cable with 600V insulation is required.
- Oil-resistant cable is recommended.
- Individual conductors within the cable should be color-coded or otherwise clearly marked (see Table 2.9).
- Cable must have a shield with a drain wire similar to Alpha wire XTRA-GUARD® 2:
  - Part No. 25450/9 for #14 AWG, 0.64 in. O.D.
  - Part No. 25440/9 for #16 AWG, 0.61 in. O.D.
  - Part No. 25430/9 for #18 AWG, 0.55 in. O.D.

Table 2.9
Suggested Color Scheme for Remote Lockout Station Cable

RLS Terminal Block No.	Wire Color
1	Black
2	Red
3	Blue
4	Orange
6	Yellow
7	Brown
8	Violet
9	Gray
GND	Green

Maximum Cable Length

IMPORTANT The maximum total cable length between all of the RLSs and the Control Module in the ElectroGuard® Power Panel shown in Table 2.10 must not be exceeded. This may affect the reliable operation of the ElectroGuard®. Consider using an optional Expansion Module if cable lengths greater than those shown are needed (see Installation and Wiring of the ElectroGuard® Expansion Module on page 2-68).

Table 2.10
Maximum Allowable Cable Lengths

In North America			Outside of North America			
Wire Gauge	**Control Module Connector**	**Maximum Total Cable Length (ft.)**	**Wire Gauge (mm^2)**	**Maximum Total Wire Length (m)**	**23…85 A**	**110…1200 A**
14 AWG	RLS1, RLS2, RLS3	19,500	2.1	5,900	—	X
	RLS4, RLS5, RLS6	19,500		5,900	—	X
	RLS1, RLS2, RLS3, RLS4	19,500		5,900	X	—
16 AWG	RLS1, RLS2, RLS3	12,250	1.3	3,735	—	X
	RLS4, RLS5, RLS6	12,250		3,735	—	X
	RLS1, RLS2, RLS3, RLS4	12,500		3,735	X	—
18 AWG	RLS1, RLS2, RLS3	7,650	0.8	2.330	—	X
	RLS4, RLS5, RLS6	7,650		2,330	—	X
	RLS1, RLS2, RLS3, RLS4	7,650		2,330	X	—

The cable lengths in Table 2.10 represent the total wire impedance allowed to help ensure proper operation of the safety monitoring relays used in the isolation system. See Appendix C of this manual regarding length calculation, conductor sizing and installation scenarios.

Wiring the Remote Lockout Station

1. Open the RLS enclosure by loosening the two cover clamp screws (see Figure 2.24). With the operating handle held in the OFF position, squeeze the handle and interlock lever and operation handle as in Figure 2.25. Lift the cover away from the base.

2. Use appropriate environmentally-rated hubs or conduit fittings to connect cables to the RLS enclosure.

   Each RLS is furnished with two 1.38 in. (35 mm) diameter openings (one on the top and one on the bottom) designed to accept 1 in. (25.4 mm) conduit fittings or hubs.

   The top openings have closing plugs to maintain the integrity of the enclosure environmental rating. Red plastic cap plugs are inserted in the bottom openings to keep debris out of the enclosure during shipment and storage.

IMPORTANT When installing and wiring the RLS, remove and discard the red plastic cap plug. If wiring the RLS using one top opening, remove the corresponding closing plug from the top and install in the open bottom hole to maintain the integrity of the enclosure environmental rating.

IMPORTANT The cables to the RLS must not be run in a line voltage wireway or run adjacent to power conductors. The cables must be protected from physical damage. This requires the appropriate conduit outside of the RLS.

IMPORTANT Connector plugs provided on ElectroGuard® Control Modules and Expansion Modules are factory shipped with two jumper wires installed (see Figure 2.61).

These two jumper wires must be removed and discarded when wiring is performed to connect a Remote Lockout Station to the connector plug.

Failure to remove the two jumper wires on the connector plug will prevent proper operation of the RLS "System Isolated" indicator light.

Figure 2.61 RLS Connector Plug Jumper Wire

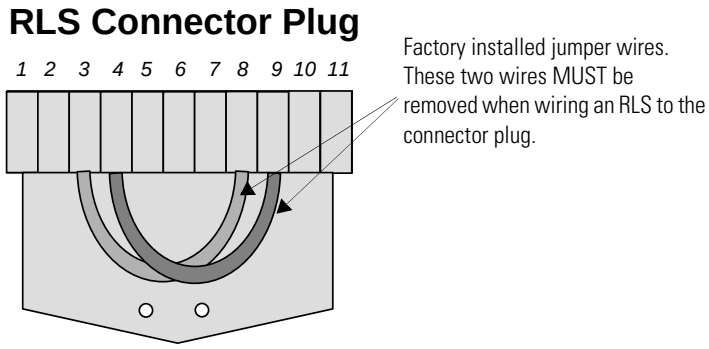

3. Select an RLS port and connector plug on the ElectroGuard® unit to be dedicated to the RLS being installed. Remove these plugs by firmly grasping their strain relief tabs and pulling straight out from the port.

IMPORTANT

Control Module and Expansion Module connector plugs and ports, with the exclusion of the HV connector in the Control Module, are factory keyed. This is done to help ensure correct plug installation after maintenance or servicing, which may have required the removal of any of the connector plugs.

Installing an RLS connector plug into a port with non-matching keying may damage the connector as well as the Control Module or Expansion Module port.

Figure 2.62
Wiring from the RLS Terminal Block to a Connector Plug on a Control Module or Expansion Module

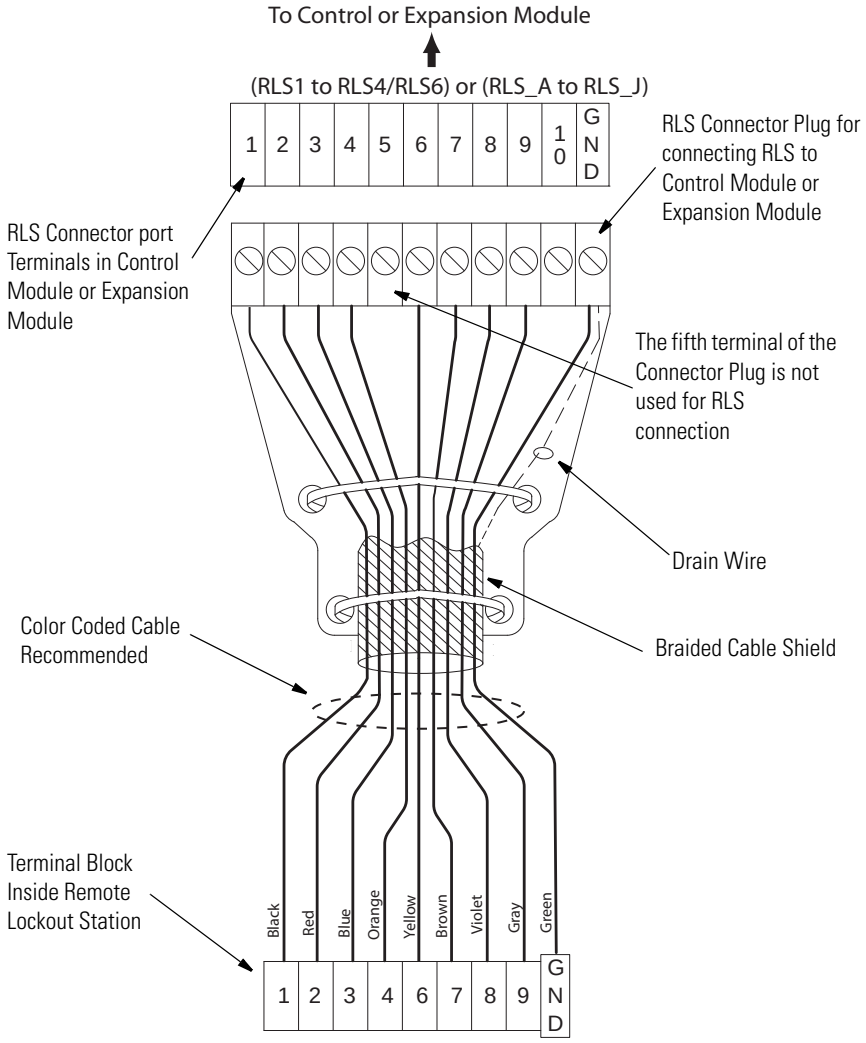

Table 2.11 Continuity Check Table

Remote Lockout Station Status	Control Module/Expansion Module Connector Plug Connection Point Numbers	Continuity
ON	2 & 7	Yes
ON	3 & 8	Yes
ON	4 & 9	Yes
ON	1 & 6	No
OFF	2 & 7	No
OFF	3 & 8	No
OFF	4 & 9	No
OFF	1 & 6	Yes ❶

❶ The "SYSTEM ISOLATED" light on the front of the Remote Lockout Station has an impedance of about 2k Ohms.

4. Wire each terminal block to its corresponding plug using appropriate cable (see Figure 2.62, also use Table 2.9, if using recommended cable). All wires from the first connected ElectroGuard® System should go to one terminal block, and all of the wires from the second system should go to the remaining terminal block.

5. Have one technician operate the RLS while a second technician checks the continuity between connection points on the RLS connector plug for the Control Module or Expansion Module of the ElectroGuard® System (per Table 2.11). If continuity check is unsatisfactory, review wiring done in step 4 for errors and then re-check continuity.

6. When the continuity checks are successfully completed, close the RLS enclosure cover, place the cover clamps over the lip on the edge of the cover, and tighten the two cover clamp screws.

7. Commission the unit per Chapter 3, *Commissioning of the ElectroGuard® Safety Isolation System*.

Installation and Wiring of the ElectroGuard® Dual Remote Lockout Station(s)

Overview

The Dual Remote Lockout Station (RLS) is a rotary operated, enclosed switch with two System Isolated verification lights and an operating handle that can be locked in the OFF position to provide Lockout/Tagout. The Dual Remote lockout Station is used to initiate the isolation sequence simultaneously in two separate ElectroGuard® units by sending signals to each Control Module.

Remote Lockout Station Cable Specifications

IMPORTANT

- Cable must have copper conductors only.
- Cable with 600V insulation is required.
- Oil-resistant cable is recommended.
- Individual conductors within the cable should be color-coded or otherwise clearly marked (see Table 2.12).
- Cable must have a shield with a drain wire similar to Alpha wire XTRA-GUARD® 2:
  - Part No. 25450/9 for #14 AWG, 0.64 in. O.D.
  - Part No. 25440/9 for #16 AWG, 0.61 in. O.D.
  - Part No. 25430/9 for #18 AWG, 0.55 in. O.D.

Table 2.12
Suggested Color Scheme for Remote Lockout Station Cable

RLS Terminal Block No.	Wire Color
1	Black
2	Red
3	Blue
4	Orange
6	Yellow
7	Brown
8	Violet
9	Gray
GND	Green

Maximum Cable Length

IMPORTANT The maximum total cable length between all of the RLSs and the Control Module in the ElectroGuard® Power Panel shown in Table 2.13 must not be exceeded. This may affect the reliable operation of the ElectroGuard®. Consider using an optional Expansion Module if cable lengths greater than those shown are needed (see Installation and Wiring of the ElectroGuard® Expansion Module on page 2-56).

.

Table 2.13
Maximum Allowable Cable Lengths

In North America			Outside of North America			
Wire Gauge	**Control Module Connector**	**Maximum Total Cable Length (ft.)**	**Wire Gauge (mm^2)**	**Maximum Total Wire Length (m)**	**23…85 A**	**110…1200 A**
14 AWG	RLS1, RLS2, RLS3	19,500	2.1	5,900	—	X
	RLS4, RLS5, RLS6	19,500		5,900	—	X
	RLS1, RLS2, RLS3, RLS4	19,500		5,900	X	—
16 AWG	RLS1, RLS2, RLS3	12,250	1.3	3,735	—	X
	RLS4, RLS5, RLS6	12,250		3,735	—	X
	RLS1, RLS2, RLS3, RLS4	12,500		3,735	X	—
18 AWG	RLS1, RLS2, RLS3	7,650	0.8	2.330	—	X
	RLS4, RLS5, RLS6	7,650		2,330	—	X
	RLS1, RLS2, RLS3, RLS4	7,650		2,330	X	—

The cable lengths in Table 2.13 represent the total wire impedance allowed to help ensure proper operation of the safety monitoring relays used in the isolation system. See Appendix C in this manual regarding length calculation, conductor sizing and installation scenarios. Note that each Dual RLS is connected to two separate ElectroGuard® units, and a cable length calculation must be done for both systems separately. When doing individual calculations, use only the length of the cable connected directly to that unit.

Wiring the Dual Remote Lockout Station

1. Open the Dual RLS enclosure by loosening the two cover clamp screws (see Figure 2.24). With the operating handle held in the OFF position, squeeze the handle and interlock lever and operation handle as in Figure 2.25. Lift the cover away from the base.

2. Use appropriate environmentally-rated hubs or conduit fittings to connect cables to the Dual RLS enclosure.

   Each Dual RLS is furnished with four 1.38 in. (35 mm) diameter openings (two on the top and two on the bottom) designed to accept 1 in. (25.4 mm) conduit fittings or hubs.

   The top openings have closing plugs to maintain the integrity of the enclosure environmental rating. Red plastic cap plugs are inserted in the bottom openings to keep debris out of the enclosure during shipment and storage.

IMPORTANT When installing and wiring the Dual RLS, remove and discard both red plastic cap plugs. If wiring the Dual RLS using one or both top openings, remove the corresponding closing plug(s) from the top and install in the open bottom hole(s) to maintain the integrity of the enclosure environmental rating.

IMPORTANT The cables to the Dual RLS must not be run in a line voltage wireway or run adjacent to power conductors. The cables must be protected from physical damage. This requires the appropriate conduit outside of the Dual RLS.

IMPORTANT Connector plugs provided on ElectroGuard® Control Modules and Expansion Modules are factory shipped with two jumper wires installed (see Figure 2.63).

These two jumper wires must be removed and discarded when wiring is performed to connect a Remote Lockout Station to the connector plug.

Failure to remove the two jumper wires prevents proper operation of the RLS “System Isolated” indicator light.

Figure 2.63 RLS Connector Plug Jumper Wire

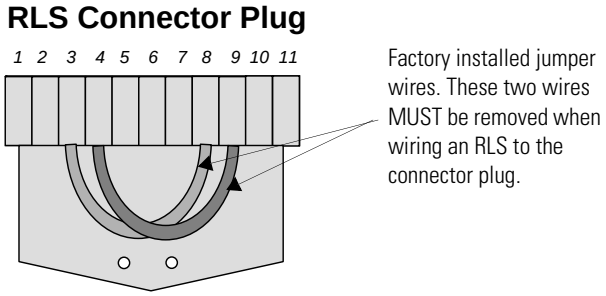

3. Select an RLS port and connector plug on both ElectroGuard® units to be dedicated to the Dual RLS being installed. Remove these plugs by firmly grasping their strain relief tabs and pulling straight out from the port.

IMPORTANT

Control Module and Expansion Module connector plugs and ports, with the exclusion of the HV connector in the Control Module, are factory keyed. This is done to help ensure correct plug installation after maintenance or servicing, which may have required the removal of any of the connector plugs.

Installing an RLS connector plug into a port with non-matching keying may damage the connector as well as the Control Module or Expansion Module port.

Figure 2.64
Wiring from the RLS Terminal Block to a Connector Plug on a Control Module or Expansion Module

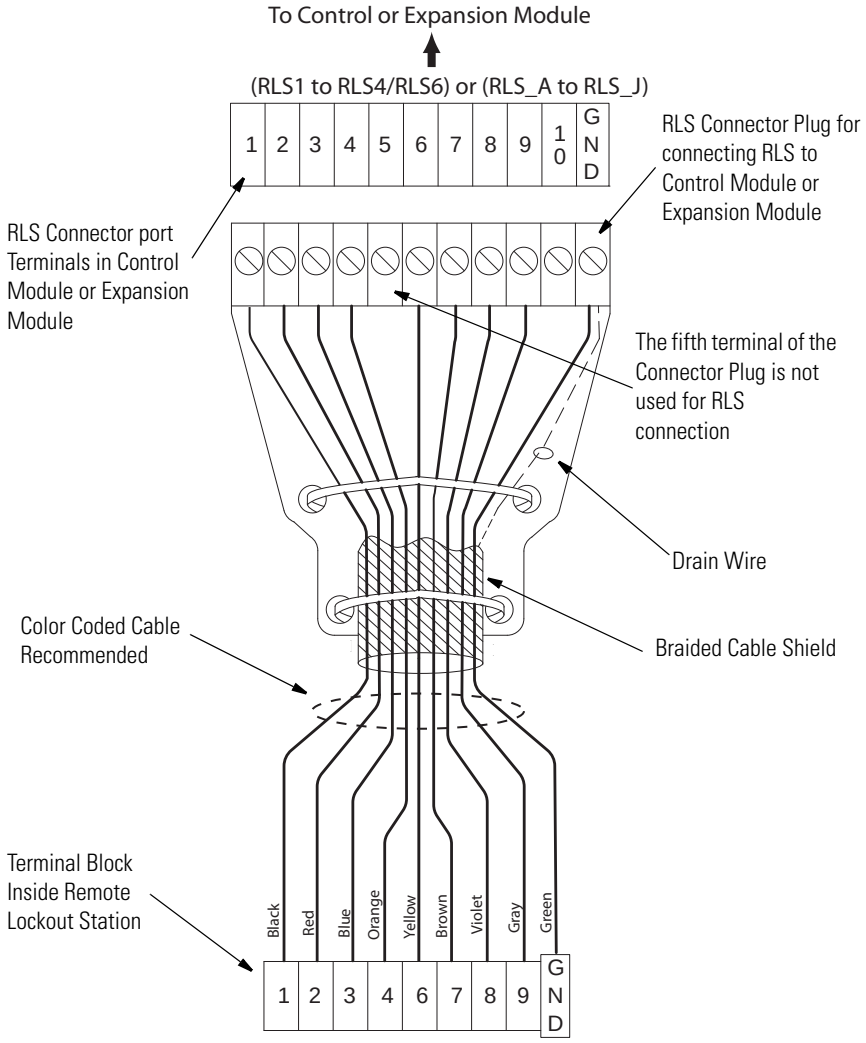

Table 2.14 Continuity Check Table

Remote Lockout Station Status	Control Module/Expansion Module Connector Plug Connection Point Numbers	Continuity
ON	2 & 7	Yes
ON	3 & 8	Yes
ON	4 & 9	Yes
ON	1 & 6	No
OFF	2 & 7	No
OFF	3 & 8	No
OFF	4 & 9	No
OFF	1 & 6	Yes ❶

❶ The "SYSTEM ISOLATED" light on the front of the Remote Lockout Station has an impedance of about 2k Ohms.

4. Wire each terminal block to its corresponding plug using appropriate cable (see Figure 2.64, also use Table 2.12 if using recommended cable). All wires from the first connected ElectroGuard® System should go to one terminal block, and all of the wires from the second system should go to the remaining terminal block.

5. Have one technician operate the Dual RLS while a second technician checks the continuity between connection points on the RLS connector plug for the Control Module or Expansion Module of the first ElectroGuard® System (per Table 2.14). If continuity check is unsatisfactory, review wiring done in Step 4 for errors and then re-check continuity. When all of the connections between the Dual RLS and the first ElectroGuard® System are satisfactory, repeat for all connections between the Dual RLS and the second ElectroGuard® System.

6. When both continuity checks are successfully completed, close the Dual RLS enclosure cover, place the cover clamps over the lip on the edge of the cover and tighten the two cover clamp screws.

7. Commission the unit per Chapter 3, *Commissioning of the ElectroGuard® Safety Isolation System,* of this manual.

Installation and Wiring of the ElectroGuard® Expansion Module

Overview

The ElectroGuard® Expansion Modules are used when there is a need to increase the number of Remote Lockout Stations, or the maximum total wire length for the four or six Remote Lockout Stations supported by the Control Module in the ElectroGuard® Power Panel.

Expansion modules are available in four-port or ten-port constructions with or without an adjustable 30-second time delay for the drive control stop (optional Expansion Module with time delay) (see Figure 2.65).

Figure 2.65
10-port Expansion Module (Open Type)

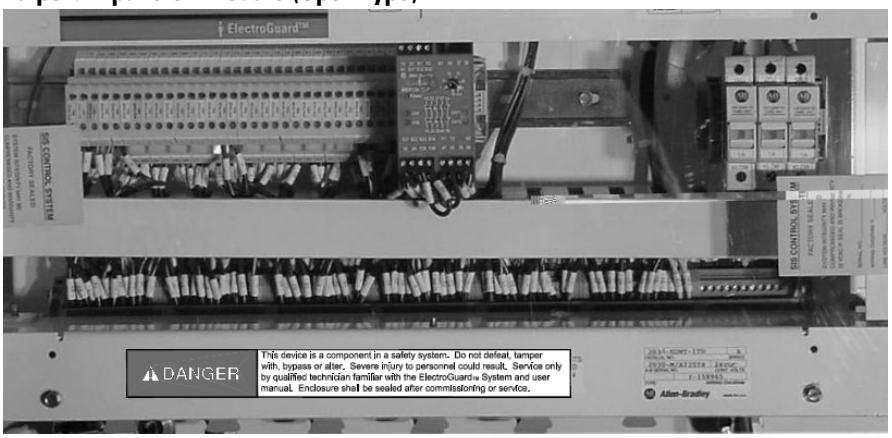

The Expansion Modules provide the connectors for the additional Remote Lockout Stations, the Remote Lockout Stations' status signals, the drive control stop (optional Expansion Module with time delay), and the connector to interface the Expansion Module to the Control Module in the ElectroGuard® Power Panel or the series connection of the Expansion Modules.(see Figure 2.66).

Note: Four-port Expansion Module is not pictured.

Installation of the Expansion Module

See the Expansion Module Installation Instruction Sheet (Revision 2 or later).

Wiring the Expansion Module

See the Expansion Module Installation Instruction Sheet (Revision 2 or later).

Figure 2.66
Connectors in 10-port Expansion Modules

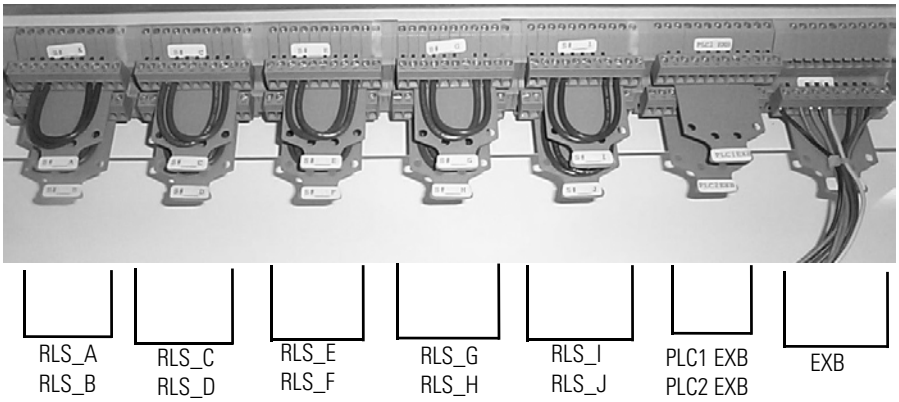

Figure 2.67
Connection of Expansion Modules to the Control Module

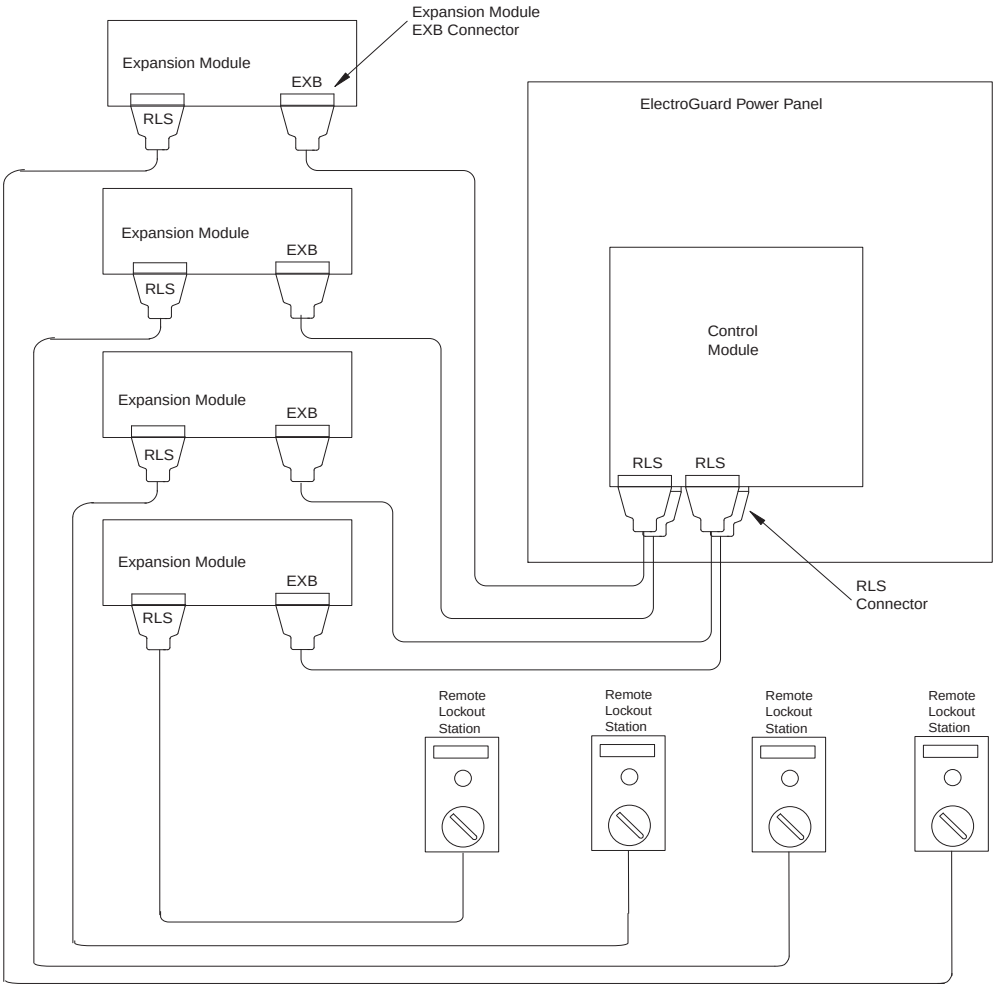

Figure 2.68
Series Connected Expansion Modules

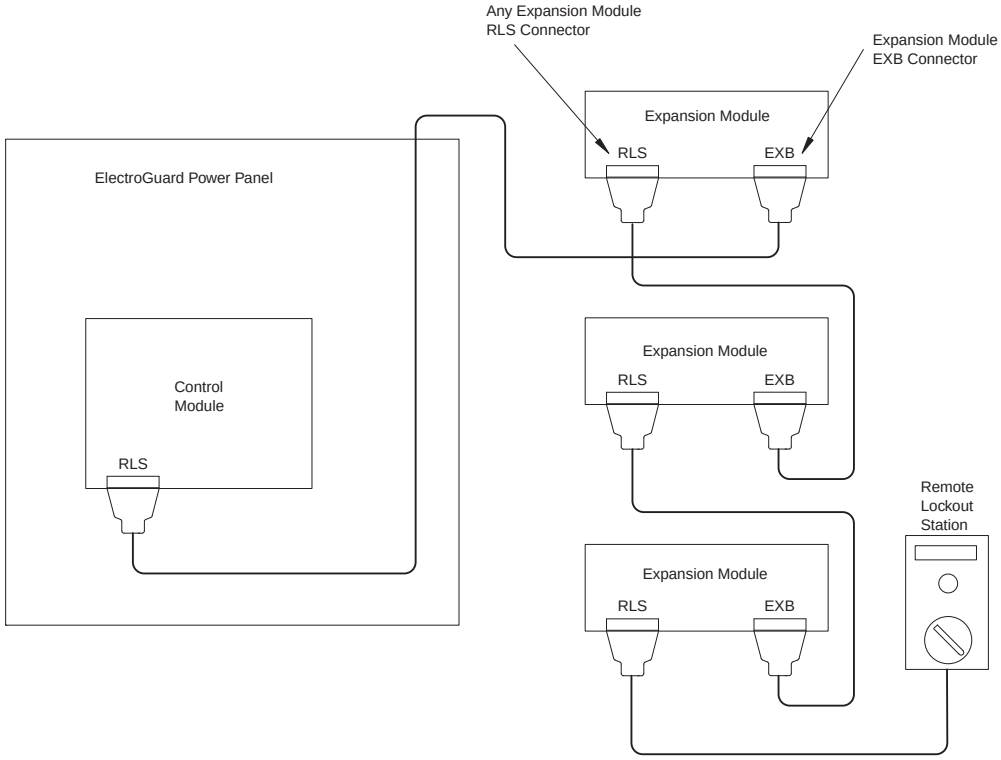

Installation and Wiring of the ElectroGuard® Verification Module

Overview

The Verification Module is an optional add-on module for the ElectroGuard® Safety Isolation System that links a customer-supplied remote device to the ElectroGuard® Control Module. The Verification Module provides a set of redundant contacts to a remote device that close when the ElectroGuard® system has safely isolated energy to the machine or process; the Verification Module can also monitor the state of the remote device and not re-apply energy until the remote device is in the proper state. The Verification Module uses a standard RLS port on a Control Module or Expansion Module and its safety outputs are analogous to an RLS 'System isolated' light.

Installation of the Verification Module

See the Verification Module Installation Instruction Sheet (Revision 2 or later).

Wiring of the Verification Module

See the Verification Module Installation Instruction Sheet (Revision 2 or later).

Installation and Wiring of the ElectroGuard® Pneumatic Isolation Module

Overview

The optional Pneumatic Isolation Module provides isolation of the pneumatic energy to the machine or process.

When an RLS is switched to the OFF position, the pneumatic energy supplied to the machine is turned off and the residual energy between the machine and pneumatic isolation module will be exhausted through the air exhaust muffler on the pneumatic module.

Installation of the Pneumatic Isolation Module

See the Pneumatic Isolation Module Installation Instruction Sheet (Revision 2 or later).

Wiring of the Pneumatic Isolation Module

See the Pneumatic Isolation Module Installation Instruction Sheet (Revision 2 or later).

Installation and Wiring of the Status Communication Modules

Installation of the Communication Modules

ATTENTION

Hazardous voltage or other forms of energy could be present. To avoid serious injury or death:

Prior to beginning the installation and wiring process, make sure that all forms of energy to the installation site have been properly turned OFF and locked out.

The optional status Communication Modules provided by Rockwell Automation are via "Flex I/O" modules.

Note: The optional status communication allows access to the status signals from the ElectroGuard® Safety Isolation System.

The Safety Isolation System status communication capabilities are:

- One data point for status indication of the ElectroGuard® Power Panel. N.O. auxiliary contacts from 1IC and 2IC are wired in series to provide the status of the isolation contactor in the ElectroGuard® Power Panel.
- Three data points for status indication of the Pneumatic Isolation Module (if applicable). One data point provides the status of the Pneumatic Valve, and two data points provide pressure status of PS1 and PS2 pressure switches in the Pneumatic Isolation Module.
- One data point for status indication of each Remote Lockout Station used in the application. An auxiliary contact from the Remote Lockout Station provides switch status indication. When the Remote Lockout Station switch is in the OFF position, the auxiliary contact is open. Conversely, when the Remote Lockout Station switch is in the ON position, the auxiliary contact is closed.

Note: The optional status Communication Modules are installed at the factory in the ElectroGuard® Power Panel enclosure when ordered with the Safety Isolation System. Each input communication module provides 16 data points. A maximum of three input communication modules (1794-IB16) can be installed within the ElectroGuard® Power Panel enclosure.

The optional status Communication Modules are installed at the factory in the Expansion Module enclosure when ordered with an enclosed Expansion Module. A maximum of one input Communication Module (1794-IB16) can be installed within the enclosed Expansion Module.

If additional input communication modules (1794-IB16) need to be installed at a later time either in the ElectroGuard® Power Panel enclosure or a customer enclosure, follow the 1794-IB16 and 1794-TB3 installation instructions. See reference publications 1794-5.4 and 1794-5.2.

Wiring of the Communication Module

The data point for the 1IC and 2IC isolation contactors status, and the data points for the status of the Remote Lockout Stations connected to the Control Module and Expansion Module in the ElectroGuard® Power Panel are factory wired to the Communication Module.

The data points from the Pneumatic Isolation Module and/or any open style Expansion Modules installed in a customer's enclosure will be wired to the 1794-IB16 by the user. If additional input communication modules (1794-IB16) are installed by the user at a later time either in the ElectroGuard® Power Panel enclosure or a customer supplied enclosure, follow the 1794-IB16 and 1794-TB3 wiring instructions. See reference publications 1794-5.4 and 1794-5.2. (See Tables 2.15, 2.16, and Figures 2.69…2.71 for typical wiring to the Communication Modules

The power for the Input Modules (separate control source #2) is factory wired when the optional Communication Module is ordered with the Safety Isolation System. The power for the Communication Adapter (separate control source #1) is wired by the customer.

To meet CE requirements, three ferrite cores and six wire ties are provided to the customer for use when wiring the Communication Module. Two of the ferrite cores must be placed around the wire's end feeding the power supplies of the Communication Module inside the enclosure. The first ferrite core is attached where the wires exit the enclosure and the second ferrite core is attached where the wires attach to the power supplies. The third ferrite core must be placed around the communication cable attached to the Communication Adapter Module inside the enclosure, where the wires exit the enclosure.

Table 2.15
Safety Isolation System Status Signals

Com Port	Module	Connector	Connection Point No.	Status Indication	RLS Status		23…85 A	110…1200 A	Input No./Bit
1 COM 1 CNET 1 DNET 1 ENET 1 PNET (Input Module)	ElectroGuard® Power Panel	IP2	9 and 10	System	Closed with all RLS "ON"	Open with any RLS "OFF"	X	N/A	0
		FB2	7 and 8				N/A	X	
	Pneumatic Isolation Module	HC	8 and 16	Pneumatic Valve	Closed No Value Fault	Open Air Pressure or Valve Fault	X	X	1
			17 and 18	Pressure Switch 1	Closed with all RLS "ON"	Open with any RLS "OFF"	X	X	2
			19 and 20	Pressure Switch 2	Closed with all RLS "ON"	Open with any RLS "OFF"	X	X	3
	Control Module	IP2	1 and 2	RLS1	Closed with RLS1 "ON"	Open with RLS1 "OFF"	X	X	4
			3 and 4	RLS2	Closed with RLS2 "ON"	Open with RLS2 "OFF"	X	X	5
			5 and 6	RLS3	Closed with RLS3 "ON"	Open with RLS3 "OFF"	X	X	6
			7 and 8	RLS4	Closed with RLS4 "ON"	Open with RLS4 "OFF"	X	X	7
			9 and 10	RLS5	Closed with RLS5 "ON"	Open with RLS5 "OFF"	N/A	X	8
			11 and 12	RLS6	Closed with RLS6 "ON"	Open with RLS6 "OFF"	N/A	X	9
	10-Port or 4-Port Expansion Module (Optional)	PLC1EXB	1 and 2	RLS1A	Closed with RLS1A "ON"	Open with RLS1A "OFF"	N/A	X	9
			3 and 4	RLS1B	Closed with RLS1B "ON"	Open with RLS1B "OFF"	N/A	X	10
			5 and 6	RLS1C	Closed with RLS1C "ON"	Open with RLS1C "OFF"	N/A	X	11
			7 and 8	RLS1D	Closed with RLS1D "ON"	Open with RLS1D "OFF"	N/A	X	12
			9 and 10	RLS1E	Closed with RLS1E "ON"	Open with RLS1E "OFF"	N/A	X	13
		PLC2EXB	1 and 2	RLS1F	Closed with RLS1F "ON"	Open with RLS1F "OFF"	N/A	X	14
			3 and 4	RLS1G	Closed with RLS1G "ON"	Open with RLS1G "OFF"	N/A	X	15
2 COM 2 CNET 2 DNET 2 ENET 2 PNET (Input Module)			5 and 6	RLS1H	Closed with RLS1H "ON"	Open with RLS1H "OFF"	N/A	X	0
			7 and 8	RLS1I	Closed with RLS1I "ON"	Open with RLS1I "OFF"	N/A	X	1
			9 and 10	RLS1J	Closed with RLS1J "ON"	Open with RLS1J "OFF"	N/A	X	2

Table 2.15
Safety Isolation System Status Signals (Continued)

Com Port	Module	Connector	Connection Point No.	Status Indication	RLS Status		23…85 A	110…1200 A	Input No./Bit
2 COM 2 CNET 2 DNET 2 ENET 2 PNET (Input Module)	10-Port Expansion Module (Optional)	PLC1EXB	1 and 2	RLS2A	Closed with RLS2A "ON"	Open with RLS2A "OFF"	N/A	X	2
			3 and 4	RLS2B	Closed with RLS2B "ON"	Open with RLS2B "OFF"	N/A	X	3
			5 and 6	RLS2C	Closed with RLS2C "ON"	Open with RLS2C "OFF"	N/A	X	4
			7 and 8	RLS2D	Closed with RLS2D "ON"	Open with RL2D "OFF"	N/A	X	5
			9 and 10	RLS2E	Closed with RLS2E"ON"	Open with RLS2E "OFF"	N/A	X	6
		PLC2EXB	1 and 2	RLS2F	Closed with RLS2F "ON"	Open with RLS2F "OFF"	N/A	X	7
			3 and 4	RLS2G	Closed with RLS2G "ON"	Open with RLS2G "OFF"	N/A	X	8
			5 and 6	RLS2H	Closed with RLS2H "ON"	Open with RLS2H "OFF"	N/A	X	9
			7 and 8	RLS2I	Closed with RLS2I"ON"	Open with RLS2I "OFF"	N/A	X	10
			9 and 10	RLS2J	Closed with RLS2J "ON"	Open with RLS2J "OFF"	N/A	X	11
							N/A	X	12
							N/A	X	13
							N/A	X	14
							N/A	X	15

Note: If one Expansion Module is used, RLS6 is not used.
Note: If two Expansion Modules (available only on 55 in. enclosures or larger) are used, RLS5 and RLS 6 are not used. Also, reduce Expansion Module Input No./Bit by one (1).

The 24V DC, 1794-PS13 power supplies, for the Communication Module must be powered by separate control sources. Field connection points for 120V/230V AC separate control voltage sources are provided as part of the Communication Module. (See Figure 2.69 and Table 2.16)

Table 2.16 Communication Modules Power Supply Connections

Connection Point	Designator	To 1794-PS13 Terminal
AC Ground Terminal Block	G	A
120/230V AC Common/ Neutral	L2/N	B
120/230V AC Power	L1/L	C

Figure 2.69 Communication Module

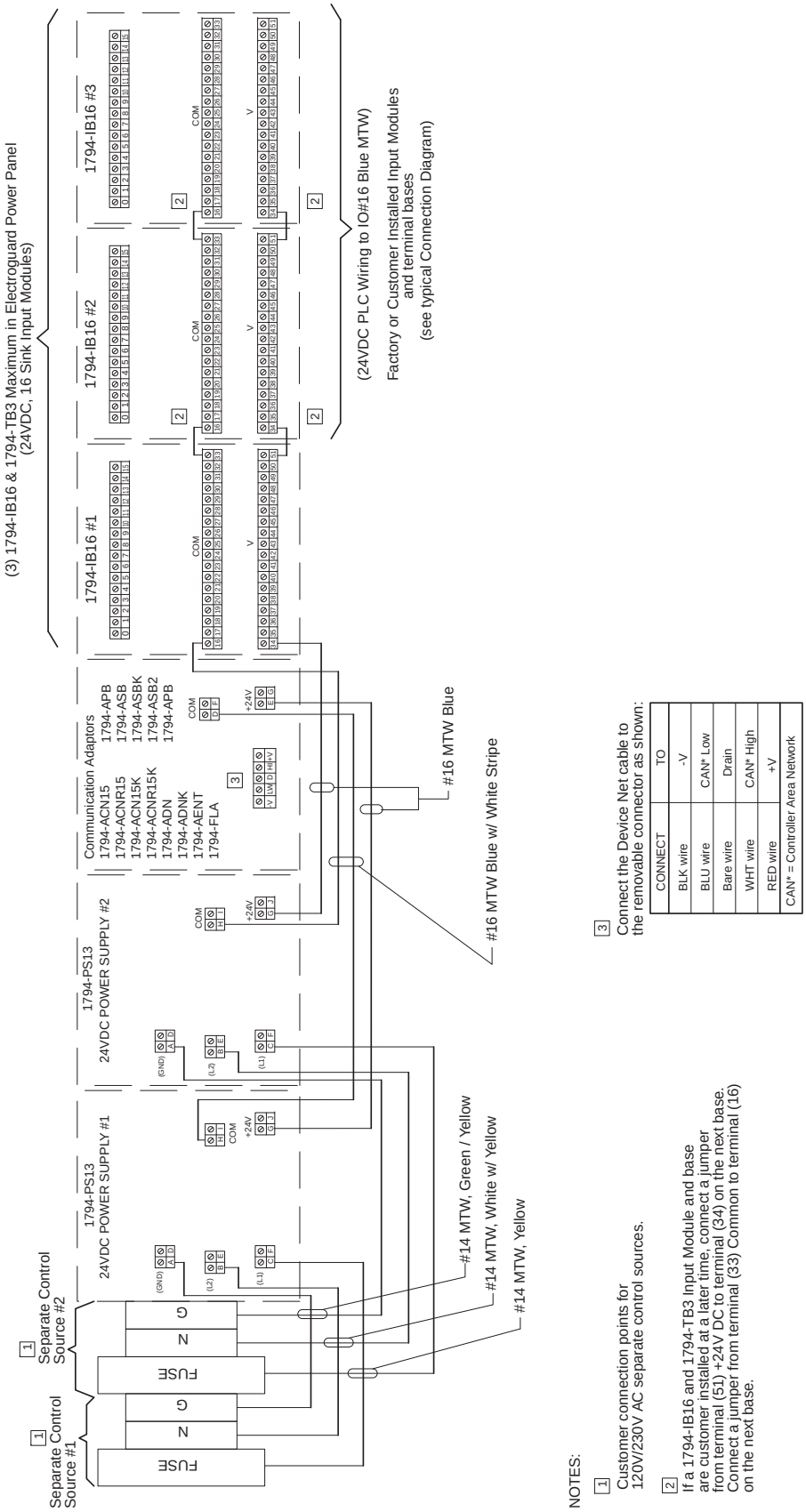

3 Connect the Device Net cable to the removable connector as shown:

CONNECT	TO
BLK wire	-V
BLU wire	CAN* Low
Bare wire	Drain
WHT wire	CAN* High
RED wire	+V
CAN* = Controller Area Network	

NOTES:

1 Customer connection points for 120V/230V AC separate control sources.

2 If a 1794-IB16 and 1794-TB3 Input Module and base are customer installed at a later time, connect a jumper from terminal (51) +24V DC to terminal (34) on the next base. Connect a jumper from terminal (33) Common to terminal (16) on the next base.

Figure 2.70
Typical Wiring for 23… 85 A Safety Isolation System with Pneumatic Isolation Module and No Expansion Modules

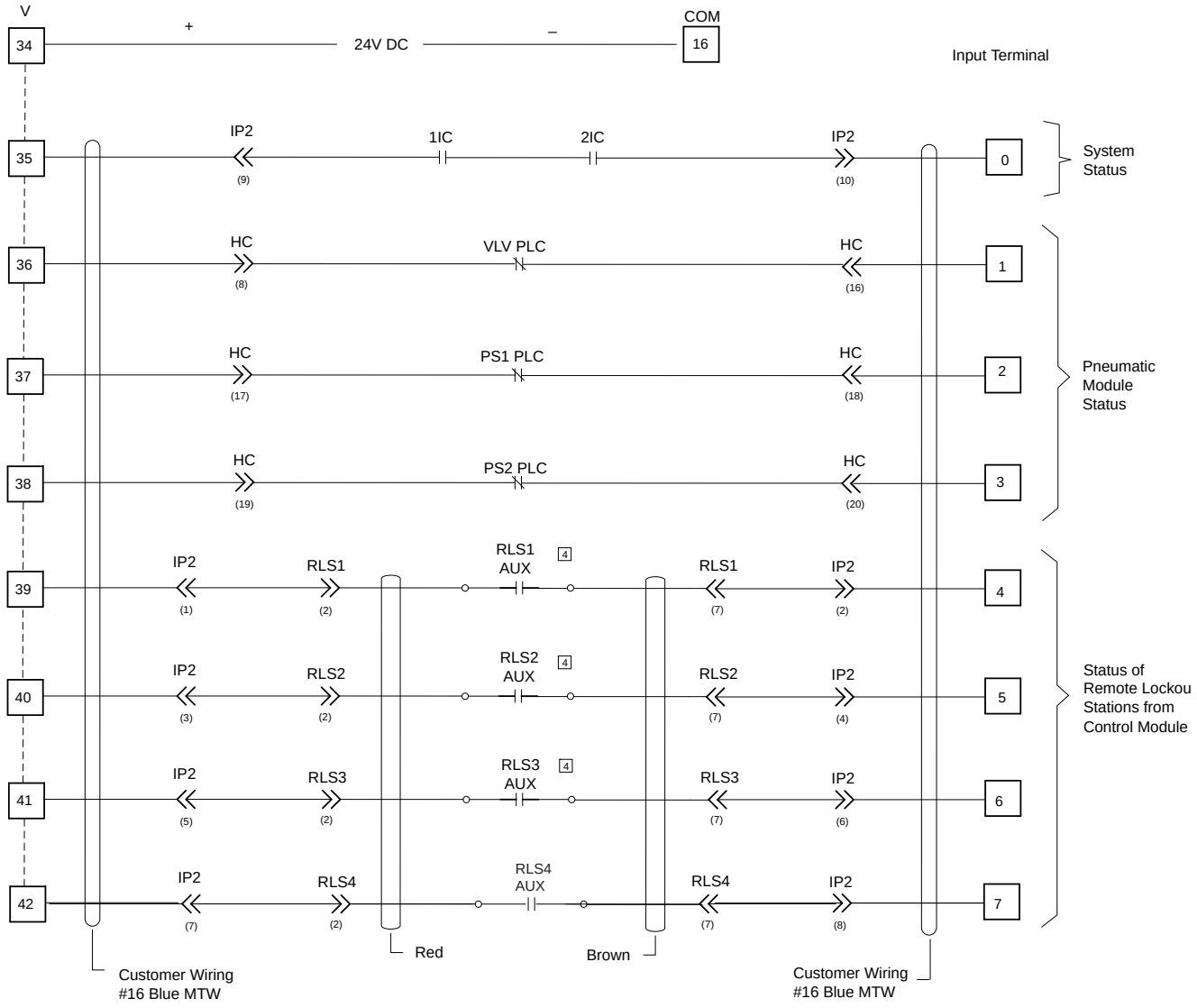

Figure 2.71
Typical Wiring for 110...1200 A, Safety Isolation System with Pneumatic Isolation Module and One (1) Expansion Module

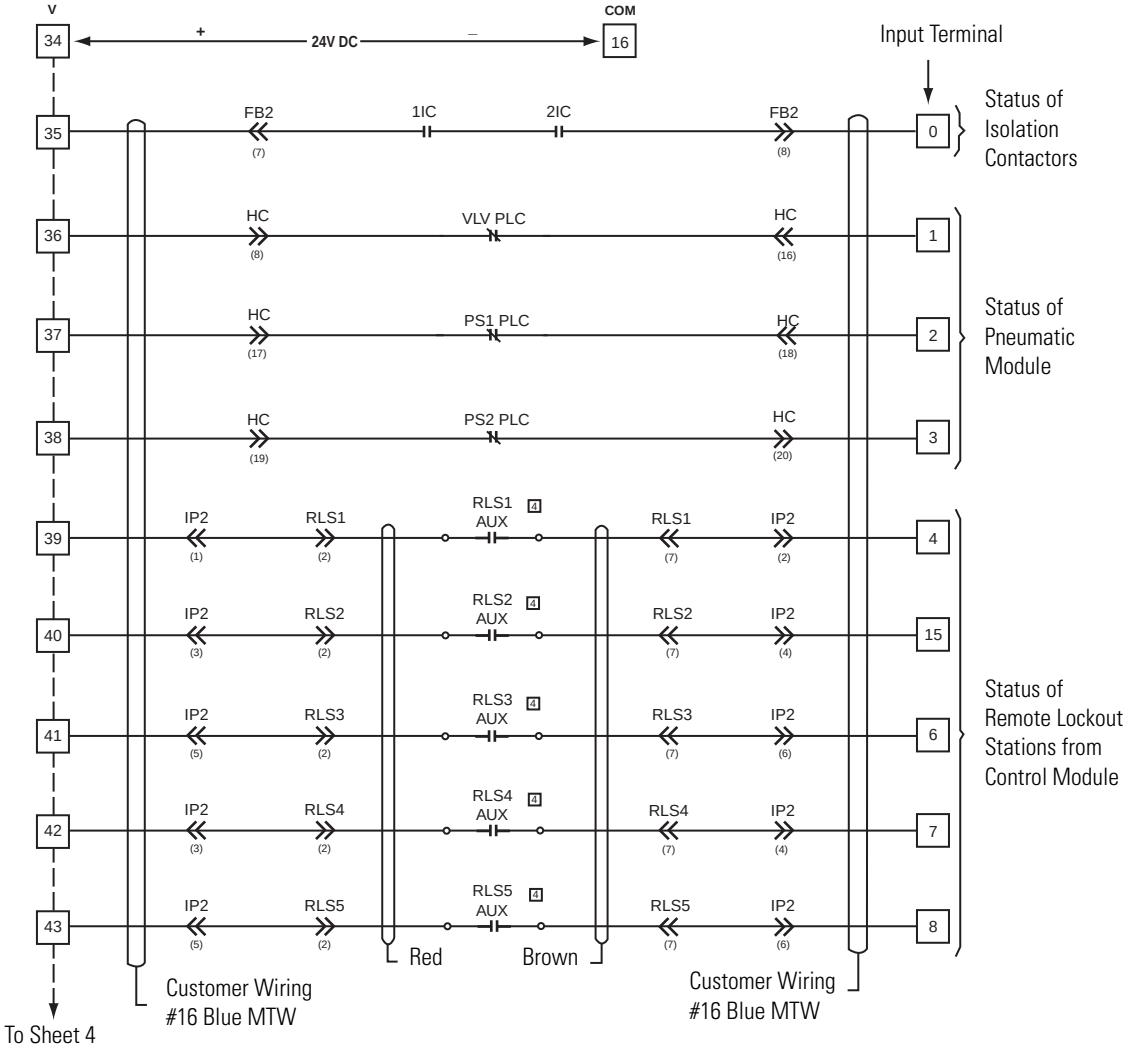

Figure 2.72
Typical Wiring for 110...1200 A, Safety Isolation System with Pneumatic Isolation Module and One (1) Expansion Module [Continued]

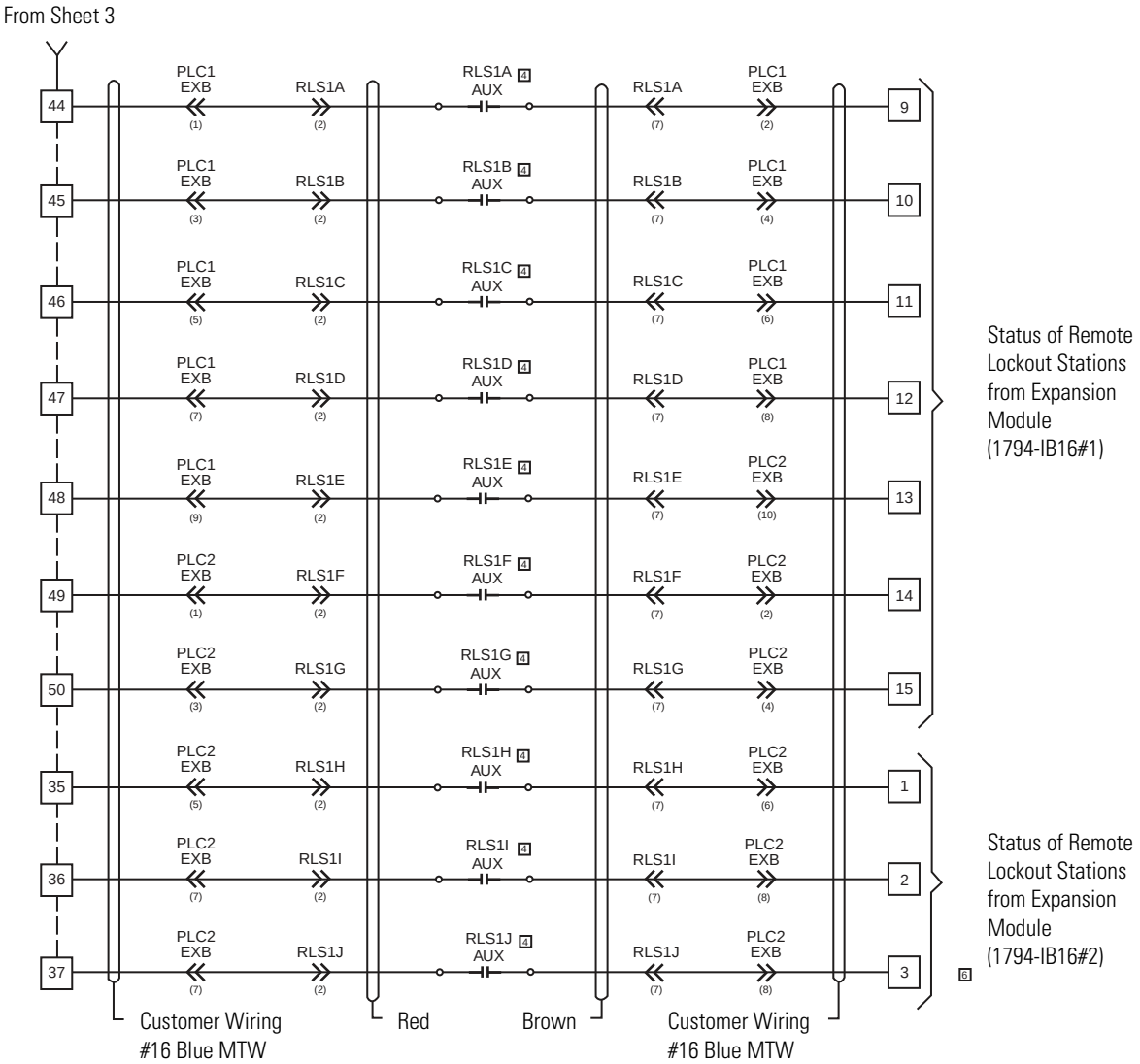

Notes:

4 Remote Device.

5 Terminal Screw tightening torque: 5…7 lb-in. (0.565…0.791 N•m)

6 If an additional open type (4) or (10) port Expansion Modules are added by the customer at a later time, additional 194-TB3 and 1794-IB16 will be required for the status indication of the Remote Lockout Stations connected to these Expansion Modules. A maximum of (3) 1794-IB16 and 1794-TB3 Input Modules and bases can be installed within the ElectroGuard® Power Panel.

Final Steps for Installation and Wiring

At this point in the installation/wiring process, all of the Safety Isolation System components should be installed and wired.

Close all RLS enclosure covers and tighten the two cover clamp screws.

All RLSs should be in the OFF position.

Proceed to Chapter 3, Commissioning of the ElectroGuard® Safety Isolation System.

Commissioning of the ElectroGuard® Safety Isolation System

Section	Page
Purpose	3-1
Required Equipment	3-2
ElectroGuard® Power Panel Verification	3-2
(Dual) Remote Lockout Station Verification	3-7
Expansion Module Verification 4-Port or 10-Port With or Without Time Delay	3-10
Communication Module Verification	3-11
Pneumatic Isolation Module Verification	3-12
Control Module with Time Delay	3-13
Incoming Power Verification	3-14
Commissioning the Safety Isolation System Without Time Delay Option	3-15
Remote Lockout Station Sequence Tests (23... 85 A)	3-17
Remote Lockout Station Sequence Tests (110…1200 A)	3-19
Commissioning Expansion Module (4-Port or 10-Port With or Without Time Delay) (23…1200 A)	3-21
Commissioning Verification Module (with Gate Locks)	3-23
Commissioning Pneumatic Isolation Module Operation	3-25
Commissioning the Communication Modules	3-27
Final Steps	3-29

Purpose

ATTENTION

Commissioning of the ElectroGuard® must be performed by a **qualified technician** familiar with the Safety Isolation System, who then seals the Remote Lockout Station(s). The Safety Isolation System Control Module, and optional Expansion and Pneumatic Isolation Modules are factory sealed. The technician responsible for the commissioning process should record the commissioning and all subsequent servicing of the system.

The purpose of Commissioning the system is to verify that the Safety Isolation System was correctly installed and operates properly.

Commissioning is necessary in order to verify:

- System hardware is operating as intended,
- Proper operation of each Remote Lockout Station,
- Proper operation of the Isolation and Grounding Contactors.

Required Equipment

- One multi-meter with lead assortment
- Field Connection Diagrams (supplied with the unit) for the ElectroGuard® Power Panel, Control Module, Remote Lockout Station, and, if applicable, Expansion Module, Communication Module, Verification Module, and Pneumatic Isolation Module.
- Proper personal protective equipment.

ElectroGuard® Power Panel Verification

ATTENTION

Hazardous voltage or other forms of energy could be present. To avoid serious injury or death:

Prior to beginning the installation and wiring process, make sure that all forms of energy to the installation site have been properly turned OFF and locked out.

1. With the power to the Safety Isolation System turned OFF and locked out at the upstream customer supplied disconnect (or locked out at the optional disconnecting means in the ElectroGuard® Power Panel), loosen the door fasteners and open the enclosure door (see Figure Chapter 3 for 23...85 A or Figure Chapter 3 for 110...1200 A).

ATTENTION

Commissioning of the ElectroGuard® must be performed by a **qualified technician** familiar with the Safety Isolation System, who then seals the Remote Lockout Station(s). The Safety Isolation System Control Module, and optional Expansion and Pneumatic Isolation Modules are factory sealed. The technician responsible for the commissioning process should record the commissioning and all subsequent servicing of the system.

ATTENTION

Hazardous voltage could be present. To avoid serious injury or death:

Personal protective equipment may be required for the commissioning process.

Figure 3.1
23…85 A ElectroGuard® in Type 12 Enclosure with Optional Branch Circuit Protection

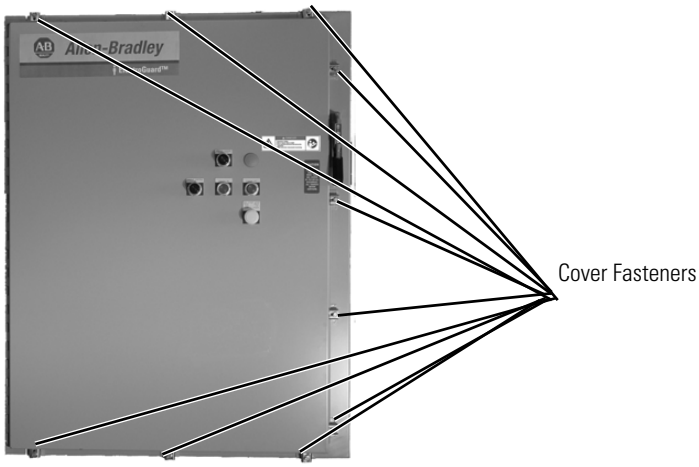

Figure 3.2
110…1200 A ElectroGuard® in MCC Enclosure

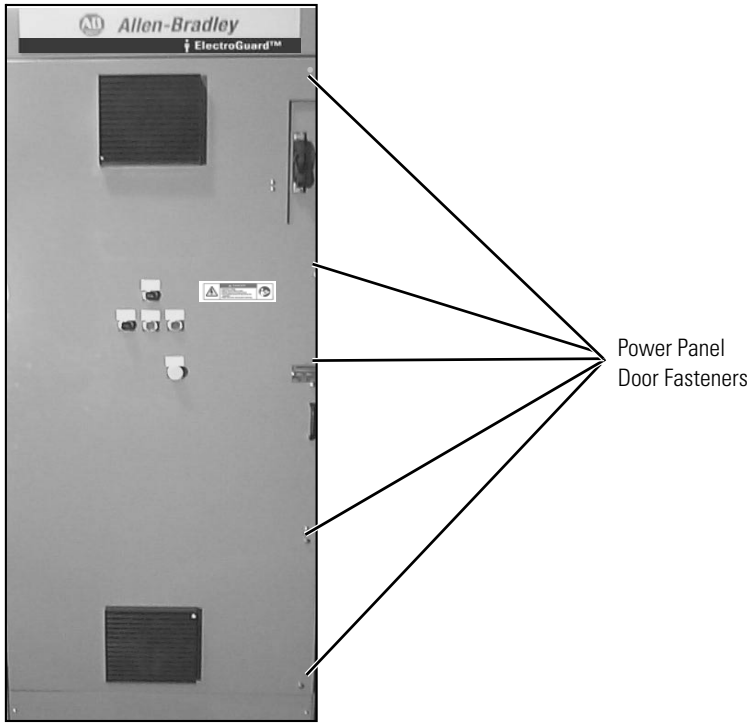

2. Verify that voltage is not present phase-to-phase and phase-to-ground on either the load side of the optional disconnecting means (if provided) or the terminals of the power distribution block (if optional disconnecting means not provided (See Figures Chapter 3 and Chapter 3 for disconnecting means, or Figures Chapter 3 and Chapter 3 for power distribution block).

Figure 3.3
Load Side of Fusible Disconnect Switch (Shown Without Fuses)

Figure 3.4
Load-side of Circuit Breaker

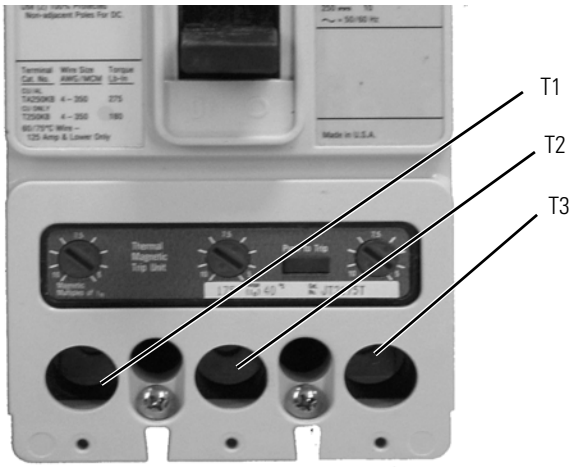

Figure 3.5
Line Side of Typical Power Distribution Block (23… 85 A)

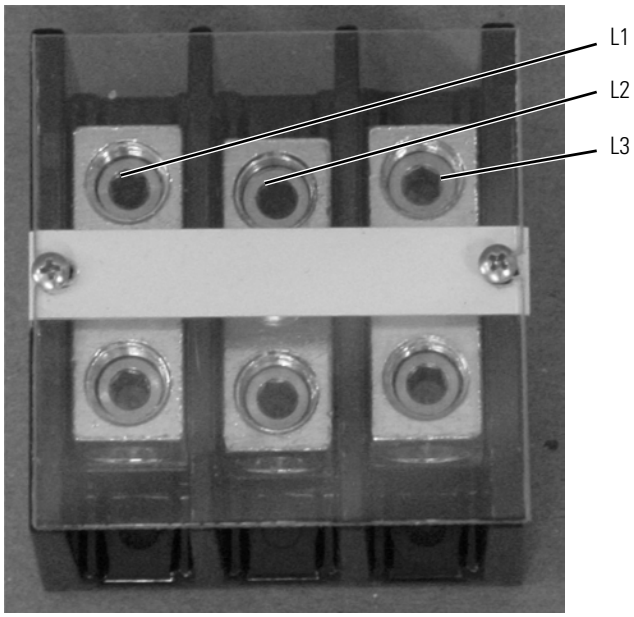

Figure 3.6
Line Side of Typical Power Distribution Block (110… 1200 A)

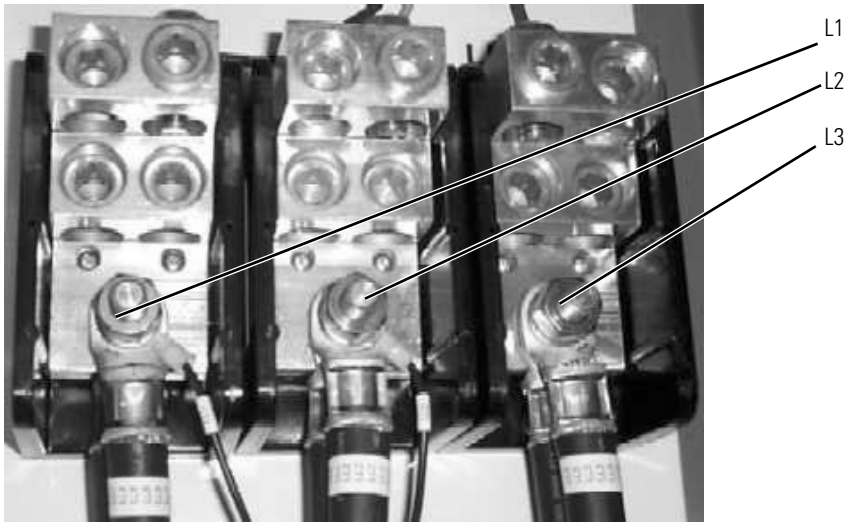

3. Verify that all the power connections inside of the ElectroGuard® Power Panel are tight. Refer to the torque label affixed to the enclosure door. (See Figure Chapter 3 for location of label on enclosure door.)

Figure 3.7
Torque Label Location

4. If the customer-supplied or factory-installed upstream disconnecting means is a fusible disconnect, verify that applicable sized power fuses are in place to allow commissioning and start up of the system.

5. Verify the Isolated Ground conductor is present and secured at the "Isolated Ground" terminal block. The isolated Grounding conductor must have a direct connection to Earth Ground.

6. Verify the Equipment Ground conductor is present and secured at the (P.E.) terminal lug.

(Dual) Remote Lockout Station Verification

Check the wiring from each of the Remote Lockout Stations to verify that wiring matches Figure Chapter 3 for each Remote Lockout Station.

Figure 3.8
Wiring the Remote Lockout Station to the Control Module or Expansion Module

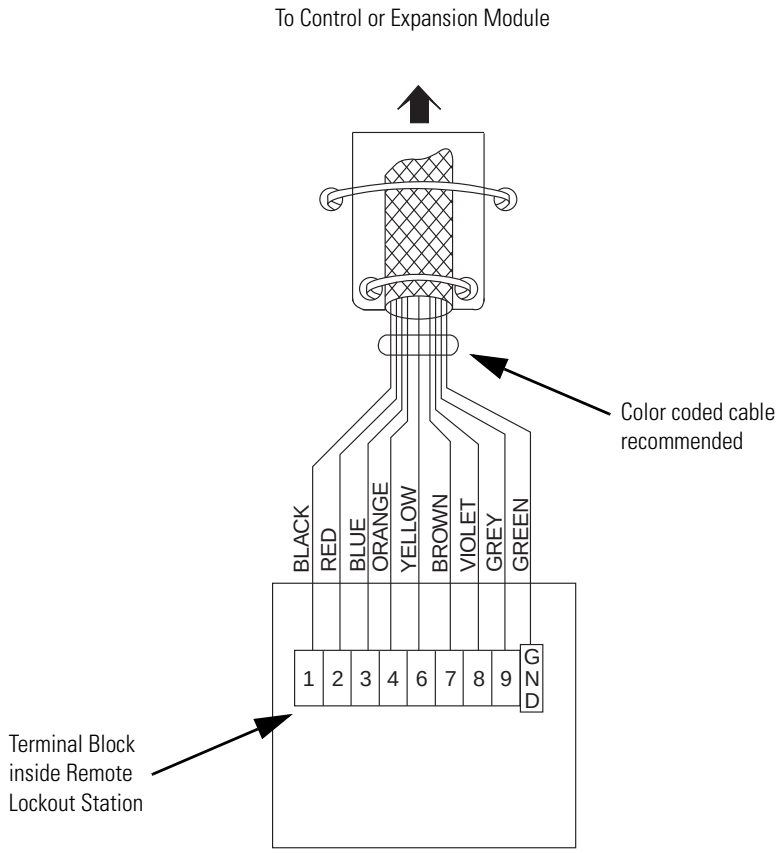

Check each Remote Lockout Station for proper wiring and operation as follows:

1. At the power panel, remove the Remote Lockout Station connector plug from the terminal block in the Control Module or the Expansion Module (see Figure Chapter 3).

Figure 3.9
Remote Lockout Stations Connector Plugs

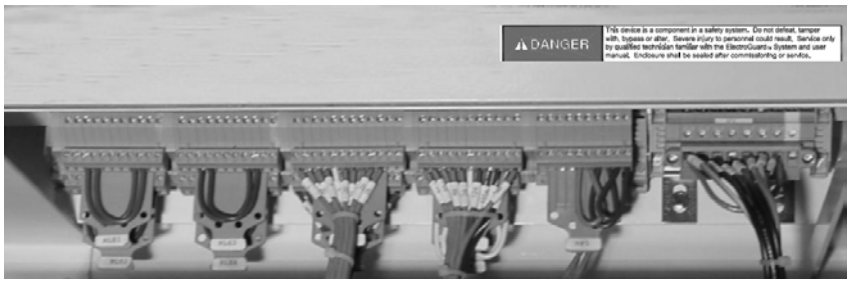

2. Have a qualified technician operate the Remote Lockout Station while another technician checks continuity between connection points on the Remote Lockout Station connector plug in the Control Module or the Expansion Module as outlined in Table Chapter 3, "Continuity Check Table". If continuity check is unsatisfactory, see Chapter 4, *Troubleshooting.*

Note: When all of the connections between the Dual RLS and the first ElectroGuard® system are satisfactory, repeat for all connections between the Dual RLS and the second ElectroGuard® system.

Table 3.1
Continuity Check Table

Remote Lockout Station Status	Control Module / Expansion Module Connector Plug Connection Point Numbers	Continuity
On	2 & 7	Yes
On	3 & 8	Yes
On	4 & 9	Yes
On	1 & 6	No
Off	2 & 7	No
Off	3 & 8	No
Off	4 & 9	No
Off	1 & 6	Yes ❶

❶ The "SYSTEM ISOLATED" light on the front of the Remote Lockout Station has an impedance of about 2k Ohms.

If a Remote Lockout Station connector plug is not used, grip the strain relief pad holding the Remote Lockout Station connector, and remove the connector by pulling it away from the Control Module or Expansion Module. Verify that jumper wires have been installed at connection points (3) and (8) and (4) and (9). (See Table Chapter 3 and Figure Chapter 3 for jumper information.)

Table 3.2
Jumpering Out an Unused Remote Lockout Station PortStation

Connector Plug	Connection Points	Recommended Wire
RLS1 through RLS6	(3) & (8)	# 16 AWG MTW, blue/1.3 mm^2 blue
	(4) & (9)	# 16 AWG MTW, blue/1.3 mm^2 blue

Figure 3.10
Jumper Wire Installation on a Connector Plug for an Unused Remote Lockout Station.

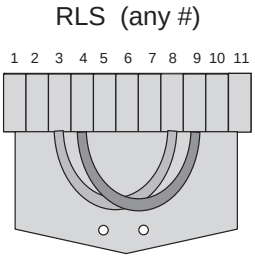

IMPORTANT

For proper operation of the Safety Isolation System:

When a Remote Lockout Station is installed, the two jumper wires must be removed from the plug that will be used to connect it.

3. Ensure that the connection points do not have continuity with any other connection point or ground when the Remote Lockout Station operating handle is in the ON position, except as stated in Table Chapter 3.

4. Ensure that the connection points do not have continuity with any other connection point or ground when the Remote Lockout Station operating handle is in the OFF position, except as stated in Table Chapter 3.

5. If a Remote Lockout Station fails any of the above continuity checks troubleshoot the point-to-point wiring between the terminal block in the Remote Lockout Station and the Remote Lockout Station connector plug in the Control Module or the Expansion Module.

IMPORTANT

For proper operation of the Safety Isolation System:

The five-step procedure outlined above should be repeated for each Remote Lockout Station.

Note: If any Remote Lockout Station fails the continuity check and if the wiring between the Remote Lockout Station terminal block and the Remote

Lockout Station connector plug in the Control Module or the Expansion Module is correct, replace the Remote Lockout Station.

Expansion Module Verification 4-Port or 10-Port With or Without Time Delay

Verify that the open type Expansion Module has been securely attached to the mounting plate of the enclosure.

Verify that the tamper-indicating seal has not been broken.

Check that there is proper clearance for the connector plugs and wires. A clearance of 6 in. (152 mm) should be observed for ease of installation and removal of connector plugs.

Check that all connectors are secure and inserted into the proper ports on the Expansion Module. There are four or ten Remote Lockout Station ports, one or two PLCEXB ports, and one EXB port. The EXB connector plug from the Expansion Module must be securely attached to a Remote Lockout Station port in the Control Module, or another Expansion Module.

Communication Module Verification

The Communication Module is for ElectroGuard® status and does not affect the operation of the ElectroGuard® system.

The communications can be verified after the system is commissioned by cycling each component of the system.

Pneumatic Isolation Module Verification

IMPORTANT

When installing air connections, the Pneumatic Module external pipe fitting needs to be held secure. If this is not done, internal fitting may become loose, causing an air leak.

When making the hard-piped air connections to the air inlet and outlet fittings to the module, a clearance of 5 in. (127 mm) should be observed for ease of installation and module replacement, if necessary.

1. Verify that an air filter and moisture trap for the incoming air line and a moisture trap for the outgoing air line have been installed.
2. Verify the Pneumatic Isolation Module has been securely attached to a wall or other form of permanent mount.
3. Check for a minimum of 6 in. (152 mm) of clearance for access to inlet and outlet piping connections.
4. Verify that the area in front of the pressure relief valve, protruding from the enclosure bottom is clear of obstructions.
5. Verify that inlet and outlet air line fittings have been tightened to prevent air line leakage.
6. Verify the electrical connector on the side of the Pneumatic Isolation Module is inserted and properly latched to the bulkhead connector.
7. Check connector plugs HP1 and HP2 inside the ElectroGuard® Power Panel to verify they are correctly installed and firmly inserted to the corresponding terminal blocks in the Control Module.
8. Verify the indicator Light Status Chart is affixed to the enclosure door.

Control Module with Time Delay

If the Safety Isolation System has been purchased with the Time Delay Option, the Control Module will provide two connection points for the Drive Control Stop. For more information, see *Wiring the Control Module with Time Delay Option (IP1 or FB1 Drive Control Stop Connector)* on page 2-51.

Incoming Power Verification

ATTENTION

Hazardous voltage or other forms of energy could be present. To avoid serious injury or death:

Personal protective equipment may be required for this portion of the commissioning process.

1. With the power to the Safety Isolation System still turned OFF and locked out at the customer-supplied upstream disconnect (or locked out at the optional disconnecting means in the ElectroGuard® Power Panel), verify the disconnect that feeds electrical energy to the ElectroGuard® Power Panel does not feed any other panel or device on the machine.
2. Verify the Motor Starters or Drives located downstream of the Safety Isolation System are OFF and can not start automatically when power is applied.
3. Turn the operating handles of all of the RLSs to the OFF position. A padlock(s) can be inserted into the locking tab of the RLS operating handles (if it is in the OFF position) in order to keep the electrical energy feeding the loads isolated.

ATTENTION

In this test, the disconnecting means supplying electrical energy to the Safety Isolation System will be turned ON.

Other panels or devices on portions of the machine not controlled by the SIS may also be fed through the branch circuit protection supplying the electrical energy.

It is the responsibility of personnel commissioning this system to take the necessary measures to protect the operators.

4. Remove the padlock and move the handle of the upstream customer supplied disconnecting means supplying power to the Safety Isolation System to the ON position,

   OR
5. Remove the padlock and move the handle of the optional disconnecting means in the ElectroGuard® Power Panel to the ON position.
6. Open the ElectroGuard® Power Panel enclosure door and measure between phases to verify that proper input voltage is available.
7. Verify there is no power at the load side of the main contactors 1IC and 2IC (With the RLSs in the OFF position, the power contactors 1IC and 2IC should be de-energized.)
8. Verify that proper input voltage is available to the Safety Isolation System Control Circuit Transformer primary and 120V AC ±10% is present on the secondary.

   The Safety Isolation System control transformer will be energized.

Commissioning the Safety Isolation System Without Time Delay Option

ATTENTION

During this process, the machine could inadvertently start.

ATTENTION

Hazardous voltage or other forms of energy could be present. To avoid serious injury or death:

Prior to beginning the installation and wiring process, make sure that all forms of energy to the installation site have been properly turned OFF and locked out.

ATTENTION

Commissioning of the ElectroGuard® must be performed by a **qualified technician** familiar with the Safety Isolation System, who then seals the Remote Lockout Station(s). The Safety Isolation System Control Module, and optional Expansion and Pneumatic Isolation Modules are factory sealed. The technician responsible for the commissioning process should record the commissioning and all subsequent servicing of the system.

1. Turn all the Remote Lockout Station operating handles to the ON position and continue with the following commissioning process to confirm the proper operation of all system functions.

   Note: Air will be exhausting out the muffler of the Pneumatic Isolation Module until the "SYSTEM ON" push button is pressed.

2. Energize the power bus to the motor starters (or drives) fed from the Safety Isolation System by pressing the "SYSTEM ON" push button. (Pilot lights "SYSTEM CONTROL ON" and "ISOLATED GROUND CONNECTED" will illuminate.)

3. Check motor operation using the machine or process normal "START" and "STOP" functions. Keep the machine in the stopped mode.

   If the Pneumatic Module is attached, verify that air is being supplied to the process from the Pneumatic Isolation Module.

4. Observe the indicating lights in the Safety Isolation system Control Module after the "SYSTEM ON" push button has been depressed. (Refer to the indicator Light Explanation sheet for the Control Module, included in the document holder on the inside of the Power Panel enclosure door.)

- Pilot lights “ISOLATED GROUND CONNECTED” (or “SYSTEM GROUND CONNECTED”) and “SYSTEM CONTROL ON” should be illuminated.
- Safety relay 1SR - (Power), (K1) and (K2) LEDs should be “On”.
- (23...85 A only) LED for terminal blocks 1 and 2 should be On”.
- (23…85 A only) Safety relay 2SR- (Power), (CH1), and (CH2) LEDs should be “On”.
- (110...1200 A only) NEON terminal blocks (1), (1B) and (2) should be illuminated.
- (110...1200 A only) Safety relays 2SR, 2ASR, 5SR - (Power), (CH1), and (CH2) LEDs should be “On”.
- (110...1200 A only) Safety relays 3SR and 4SR - (Power) LED should be “On”, (CH1), and (CH2) should be “Off”.
- DC power supply LED should be “On”.
- LED for terminal blocks (100) and (103) will be “On” indicating 24V DC power is present.
- The ML pilot light should not be illuminated.
- Contactors 1IC and 2IC will energize.
- (23...85 A only) LEDs for terminal blocks 142…151 should be ON.
- (23...85 A only) All blown fuse indicating lights 1FU…10FU should be OFF.
- (23...85 A only) LED terminal block (128 and 129) should be dimly lit.
- (110...1200 A only) LED terminal blocks (141) through (178) should be “On”.
- (110...1200 A only) Blown fuse indicating lights on fuseholders for 1FU through 16FU should be “Off”.
- Confirm all Remote Lockout Station “SYSTEM ISOLATED” lights are “Off”.

5. Check system operation by individually using each Remote Lockout Station to conduct the sequence tests that follow.

Remote Lockout Station Sequence Tests (23... 85 A)

IMPORTANT

If the System Isolated light does not illuminate, **stop** commissioning at this point and go to Chapter 4, *Troubleshooting*. Do not continue commissioning until the problem has been resolved and the System Isolated light illuminates again.

ATTENTION

Commissioning of the ElectroGuard® must be performed by a **qualified technician** familiar with the Safety Isolation System, who then seals the Remote Lockout Station(s). The Safety Isolation System Control Module, and optional Expansion and Pneumatic Isolation Modules are factory sealed. The technician responsible for the commissioning process should record the commissioning and all subsequent servicing of the system.

One at a time, check the operation of each Remote Lockout Station by conducting the following sequence test:

- Turn the operating handle of the Remote Lockout Station to the OFF position.
- (Time delay option only) Two N.O. auxiliary contacts from pilot control relays 1CR' and 2CR' are wired in series to connection points IP1 (11) and IP1 (12). These connection points, when wired to the customer's drive start/stop circuit, will provide an instantaneous signal to initiate a controlled stop.
- (Time delay option only) Pilot relays 1CR' and 2CR' will de-energize, removing power from off delay timing relays 2TR and 3TR.
- (Time delay option only) After 30 seconds, contactors 1IC and 2IC de-energize.
- (Standard Module) 1IC and 2IC will be de-energized.
- GC will be energized.
- The "SYSTEM ISOLATED" light should go "On"
- Voltage sensing relays ACR, BCR, and CCR will be de-energized.
- Safety relays 2SR - (Power) LED remains "On", and (CH1), and (CH2) LEDs will go "Off".
- Refer to the Indicator Light Explanation Sheet for LED terminal blocks (142) through (151) indicating status.
- The ML pilot light should be illuminated.
- LED terminal blocks (128) and (129) should be illuminated.
- See the indicator lights explanation sheet for LED terminal blocks 142…151 indicating status.
- (Time delay option only) Resistance between terminals 11 and 12 at connector IP1 of the Control Module should be high or infinite ohms.

- Turn the Remote Lockout Station operating handle back to the ON position, and continue the check by moving on to the next Remote Lockout Station and completing the sequence test again.

Note: For the Remote Lockout Station connected to an Expansion Module, see *Commissioning Expansion Module (4-Port or 10-Port With or Without Time Delay) (23…1200 A)* on page 3-21.

Remote Lockout Station Sequence Tests (110…1200 A)

RLS1…RLS3

- Turn the operating handle of Remote Lockout Station "RLS1" to the OFF position.
- (Time delay option only) Two N.O. auxiliary contacts from 1CR' and 2CR' are wired in series between terminals 11 and 12 on connector plug FB1 of the Control Module. (these connection points, when wired to a customer's drive start/stop circuit, will provide an instantaneous signal to the drive to initiate a controlled stop.)
- (Time delay option only) Pilot relays 1CR' and 2CR' will de-energize, removing power from off delay timing relays 2TR and 3TR.
- (Time delay option only) Resistance between terminals 11 and 12 at connector FB1 of the Control Module should be high or infinite ohms.
- (Time delay option only) After 30 seconds, contactor 1IC and 2IC de-energize.
- (Standard module) 1IC and 2IC will be de-energized.
- GC will be energized.
- The "SYSTEM ISOLATED" light should go "On"
- Voltage sensing relays ACR, BCR, and CCR will be de-energized.
- Safety relays 2SR and 5SR - (Power) LED remains "On", and (CH1), and (CH2) LEDs will go "Off".
- Safety relays 2ASR, 3SR and 4SR - (Power), (CH1), and (CH2) LEDs will be "On".
- Refer to the Indicator Light Explanation Sheet for LED terminal blocks (141) through (178) indicating status.
- The ML pilot light should be illuminated.
- LED terminal block (129) should be "On".

Return the RLS1 operating handle back to the ON position. Continue by completing the above sequence test using Remote Lockout Station RLS2 followed by RLS3.

RLS4…RLS6

- Turn the operating handle of Remote Lockout Station "RLS4" to the OFF position.
- (Time delay option only) Pilot relays 1CR; and 2CR' will de-energize, removing power from off delay timing relays 2TR and 3TR.
- (Time delay option only) Resistance between terminals 11 and 12 at connector FB1 of the Control Module should be high or infinite ohms.
- (time delay option only) After 30 seconds, contactors 1IC and 2IC are de-energized.
- (Standard module) 1IC and 2IC will be de-energized.

- GC will be energized.
- The “SYSTEM ISOLATED” light will go “On”
- Voltage sensing relays ACR, BCR, and CCR will be de-energized.
- Safety relays 2ASR and 5SR - (Power) LED remains “On”, and (CH1) and (CH2) LEDs will go “Off”.
- Safety relays 2SR, 3SR and 4SR - (Power), (CH1) and (CH2) LEDs will be “On”.
- The ML pilot light should be illuminated.
- LED terminal block (129) should be “On”.
- Refer to the Indicator Light Explanation Sheet for LED terminal blocks (141) through (178) indicating status.

Return the RLS4 operating handle back to the ON position. Continue by completing the above sequence test using Remote Lockout Station RLS5 followed by RLS6.

Note: For Communication Module option, refer to Chapter 2.

Commissioning Expansion Module (4-Port or 10-Port With or Without Time Delay) (23…1200 A)

ATTENTION

Commissioning of the ElectroGuard® must be performed by a **qualified technician** familiar with the Safety Isolation System, who then seals the Remote Lockout Station(s). The Safety Isolation System Control Module, and optional Expansion and Pneumatic Isolation Modules are factory sealed. The technician responsible for the commissioning process should record the commissioning and all subsequent servicing of the system.

1. Turn on the power to the ElectroGuard® Power Panel.

2. All the Remote Lockout Station switches must be in the ON position. Observe the indicating lights in the Expansion Module(s). (See the indicating lights explanation sheet in the document folder for the Expansion Module.)
   - Safety relay SR in the Expansion Module is energized. The red LED (Power) and the two green output LEDs (K1 and K2) will illuminate.
   - LED terminal blocks (–), (+), 41, 42 (dimly), 63…88, and 91 (dimly) for the 10-port Expansion Module will be illuminated.
   - LED terminal blocks (–), (+), 41, 42 (dimly), 63…66, 73, 74…77, 84, 85…88, and 91 (dimly) for the 4-port Expansion Module will be illuminated.

3. One at a time, check the operation of each Remote Lockout Station connected to the Expansion Module(s) by conducting the following sequence test.
   - For 23…85 A units, perform RLS test as defined in Commissioning the Safety Isolation System on Page 3-15.
   - For 110…1200 A units, perform RLS test as defined in Commissioning the Safety Isolation system. When Expansion Module is plugged into RLS1 to RLS3 on Page 3-19 and RLS4 to RLS6 on Page 3-19.

Expansion Module(s) Without Time Delay

- See the indicator light explanation sheet for LED terminal blocks 63…88 for the 10-port Expansion Module and 63…66, 73, 77, 84, 88 indicating status for the 4-port expansion.
- (23…85 A only) LED terminal blocks 128 and 129 in the Control Module should be illuminated.
- (110…1200 A only) LED terminal block 129 in the Control Module should be illuminated.
- LED terminal blocks 42 and 91 in the Expansion Module should be illuminated.

Expansion Module(s) With Time Delay

- When all the Remote Lockout Station switches connected to the time delay Expansion Module are ON, the green LED (Power) and the two green output LEDs (CH1, CH2) for the instantaneous safety outputs and the two green outputs LEDs (CH1T, CH2T) for the timed safety outputs will be illuminated.
- Turn the operating handle of the Remote Lockout Station to the OFF position.
- The System Isolated light should be "On" after the appropriate time delay.
- Verify that 1IC and 2IC de-energize after the appropriate time delay.
- N.O. auxiliary contacts from safety relay SR are wired to connection points PLC1 EXB(11) and PLC1 EXB(12). These connection points, when wired in the customer's drive start/stop circuit, will provide an instantaneous signal to initiate a controlled stop.

4. Turn the Remote Lockout Station operating handle back to the ON position and continue the check by moving on to the next Remote Lockout Station connected to the Expansion Modules and complete the sequence test again.

5. Verify all RLSs are in the ON position, the System Isolated lights are "Off" and 1IC and 2IC are energized.

Commissioning Verification Module (with Gate Locks)

ATTENTION

Hazardous voltage or other forms of energy could be present. To avoid serious injury or death:

Prior to beginning the installation and wiring process, make sure that all forms of energy to the installation site have been properly turned OFF and locked out.

ATTENTION

Commissioning of the ElectroGuard® must be performed by a **qualified technician** familiar with the Safety Isolation System, who then seals the Remote Lockout Station(s). The Safety Isolation System Control Module, and optional Expansion and Pneumatic Isolation Modules are factory sealed. The technician responsible for the commissioning process should record the commissioning and all subsequent servicing of the system.

1. Turn on the power to the ElectroGuard® Power Panel and the solenoid gate.
2. Confirm that all Remote Lockout Stations switches are in the ON position.
3. Press the "SYSTEM ON" push button (located on the ElectroGuard® Power Panel).
4. Verify power LED of safety relays SR1 and SR2 are "On".
5. Verify Gate Locks are "Locked".
6. Turn any Remote Lockout Station switch to the OFF position
7. Verify the following LEDs are "On":
   - CR1 and CR2
   - SR1-Power, CH1, CH2, CHT1 and CHT2
   - SR2-Power, CH1 and CH2
8. Remove tongue from Gate Lock.
9. Verify that LEDs CH1 and CH2 of SR2 turn "Off".
10. Replace the tongue from the Gate Lock.
11. Verify that LEDs CH1 and CH2 of SR2 turn "On".
12. Repeat steps 8–11 if a second Gate Lock is attached to the Verification Module.

13. Confirm that all Remote Lockout Stations switches are in the ON position.

14. Verify the following LEDs are "Off":
    - CR1 and CR2
    - SR1 — CH1, CH2, CHT1, and CHT2.

15. Repeat the sequence for any additional Verification Modules connected to the system.

Commissioning Pneumatic Isolation Module Operation

ATTENTION

Hazardous voltage or other forms of energy could be present. To avoid serious injury or death:

Prior to beginning the installation and wiring process, make sure that all forms of energy to the installation site have been properly turned OFF and locked out.

ATTENTION

Commissioning of the ElectroGuard® must be performed by a **qualified technician** familiar with the Safety Isolation System, who then seals the Remote Lockout Station(s). The Safety Isolation System Control Module, and optional Expansion and Pneumatic Isolation Modules are factory sealed. The technician responsible for the commissioning process should record the commissioning and all subsequent servicing of the system.

1. Verify that air is being supplied to the inlet of the Pneumatic Isolation Module.
2. Turn on the power to the ElectroGuard® Power Panel.
3. Confirm that all Remote Lockout Station switches are in the ON position.
4. Verify that the "System On" light is illuminated (located on the Power Panel). If not, press the "System On" push button. If the "System On" light does not illuminate, refer to Chapter 4, *Troubleshooting*.
5. Air will exhaust from the muffler of the Pneumatic Isolation Module until its internal air safety valve is reset.
6. Confirm that the Pneumatic Isolation Module has been reset. Refer to Indicator Light Status Chart on module door and that air is not being exhausted out the muffler.
7. Confirm that compressed air is going to the pneumatic machine components connected to the air outlet of the Pneumatic Isolation Module.
8. With the compressed air supply on and the Safety Isolation System in the "RUN" mode, turn any Remote Lockout Station switch to the OFF position.
9. Observe that contactors "1IC" and "2IC" in the ElectroGuard® Power Panel de-energize. This initiates the air isolation cycle of the Pneumatic Isolation Module.

10. As isolation of the outlet air begins, the safety valve in the Pneumatic Isolation Module will de-energize and prevent air from flowing to its outlet port. After this, any residual back pressure in the air lines from the machine pneumatics will be relieved through the exhaust muffler to the atmosphere.

11. When outlet residual air pressure decreases to 5 psi or less, the Pneumatic Isolation Module will signal the Control Module in the Power Panel that the compressed air is isolated.

12. After the Control Module receives the proper signal from the Pneumatic Isolation Module, the Control Module circuit logic (with all other input signals being correct) will enable the grounding contactor "GC" to energize.

13. Verify that the "System Isolated" light has illuminated on the Remote Lockout Station that was switched to OFF.

IMPORTANT If "System Isolated" light does not illuminate, STOP commissioning at this point and see *Chapter 4, Troubleshooting* of this manual. Do not continue commissioning until the problem is resolved and the "System Isolated" light will illuminate.

14. Move the Remote Lockout Station switch operator to the ON position.

15. Confirm the "System Isolated" light on the Remote Lockout Station is no longer illuminated

16. Again use the door mounted Indicator Light Status Chart and the viewing window to confirm operational status of the Pneumatic Isolation Module.

17. Confirm that compressed air has been restored to the pneumatic machine components connected to the air outlet of the Pneumatic Isolation Module.

18. If air pressure has not been restored by the Pneumatic Isolation Module, go to the troubleshooting section of this manual.

19. If air pressure has been successfully restored, commissioning of the Pneumatic Isolation Module is complete.

20. At this point during commissioning, test the machine pneumatics for proper operation. This is to confirm the Pneumatic Isolation Module will pass enough compressed air flow to enable proper pneumatics operation. If a problem occurs, re-verify the Pneumatic Isolation Module installation.

Commissioning the Communication Modules

ATTENTION

Hazardous voltage or other forms of energy could be present. To avoid serious injury or death:

In this test the disconnect supplying electrical energy to the Safety Isolation System will be turned ON.

ATTENTION

Hazardous voltage or other forms of energy could be present. To avoid serious injury or death:

Prior to beginning the installation and wiring process, make sure that all forms of energy to the installation site have been properly turned OFF and locked out.

Verify separate control voltage source is present (120/230V AC to the Communication Module).

Turn all the Remote Lockout Station operating handles to the ON position.

Turn ON the Safety Isolation System and confirm I/O terminal indicator LED status as follows:

1. Safety Isolation Systems without the optional Pneumatic Isolation or Expansion Modules: I/O LEDs (0), (4), (5), (6), (7), (8), and (9) will be "On". **Note**: (8) and (9) are for 110… 1200 A only.

   When the operating handle of a Remote Lockout Station is turned to OFF and then ON, the following I/O LEDs will go "Off" and then "On": LED (0), and the LED of the Remote Lockout Station that was turned "Off" and then back "On" as follows:

Remote Lockout Station	I/O LED Terminal
RLS1	4
RLS2	5
RLS3	6
RLS4	7
RLS5 (110…1200 A only)	8
RLS6 (110…1200 A only)	9

2. For Safety Isolation Systems with the optional Pneumatic Isolation Module, I/O LEDs (1), (2), and (3) should illuminate under the following conditions:

I/O LED	LED Status	Valve Status
1	On	Normal operation
1	Off	Fault State/No Air Pressure
I/O LED	**LED Status**	**Pressure Switch #1 Status**
2	On	High Pressure
2	Off	Low Pressure
I/O LED	**LED Status**	**Pressure Switch #2 Status**
3	On	High Pressure
3	Off	Low Pressure

For Safety Isolation Systems with a single 10-Port Expansion Module, I/O LEDs (4) to (15) will go "On".

When the operating handle of a Remote Lockout Station is turned to the OFF position and then ON, the following I/O LEDs will go "Off" and then "On": LED (0) and the LED of the Remote Lockout Station that was turned "Off" and then back "On" as shown in Table Chapter 2, *Safety Isolation System Status Signals*.

If additional Expansion Modules are added, the number of Communication input modules must be increased to obtain the Remote Lockout Station status signals from these Expansion Modules.

A maximum of three communication modules can be installed within the ElectroGuard® Power Panel. Each module provides an additional sixteen inputs.

Final Steps

To prevent tampering, reseal the Remote Lockout Stations and Power Panel doors with a tamper-indicating seal. There are holes on the right-hand side of the Remote Lockout Station enclosure to accommodate a wire seal (see Figure Chapter 3). The Power Panel enclosure doors have a hasp (23…85 A), a locking door handle (bays without fusible disconnects or circuit breaker), or a locking quarter-turn latch that will accommodate a tamper-indicating wire seal or lock. An alternative is to use the tamper-indicating seal (Part No. 32005-386-04).

Figure 3.11
Remote Lockout Station Sealing Points

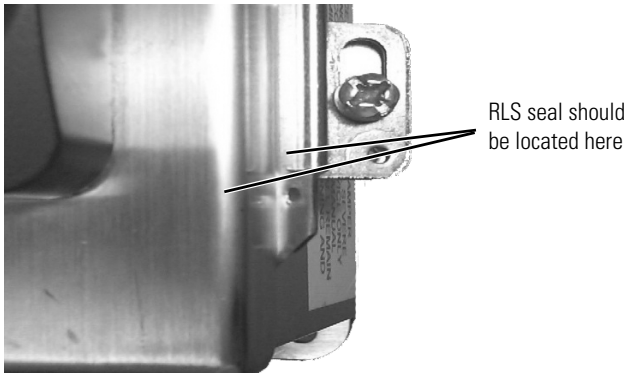

Follow your facility's procedures for sealing the Remote Lockout Stations.

- Close the ElectroGuard® Power Panel enclosure door(s) and tighten all fasteners securely.

IMPORTANT A service log, with the following data, should be maintained for each Safety Isolation System:

- Serial Number of the unit
- Date of system commissioning
- Name of the commissioning technician
- Name of the service technician
- Description of the service performed
- Date of the service

Notes:

Troubleshooting

Section	Page
General	4-1
Field Repairs	4-3
Troubleshooting Flowchart and Tables	4-3
Operational Troubleshooting of the ElectroGuard® Power Panel (23…85 A)	4-33
Operational Troubleshooting of the ElectroGuard® Power Panel (110… 1200 A)	4-40
Operational Troubleshooting of the Verification Module	4-47
Operational Troubleshooting of the Pneumatic Isolation Module	4-49
Operational Troubleshooting of the Expansion Module	4-56

General

The information in the following sections is provided to the user as a diagnostic tool to aid in the troubleshooting of the ElectroGuard® SIS. The assumption has been made that the SIS had been properly installed and operating prior to the occurrence of a fault.

ATTENTION

ElectroGuard® system modules are factory sealed with a tamper-indicating seal. Altering, defeating, or bypassing any module or component of the Safety Isolation System may result in personal injury, death, property damage, or economic loss. Only qualified service technicians must perform service or maintenance. Resealing of the modules is the responsibility of the person or organization performing the service or maintenance.

ATTENTION

Only qualified service technicians familiar with the ElectroGuard® and associated machinery should plan or implement the installation, commissioning, and subsequent maintenance of the system. Failure to do this may result in personal injury and/or equipment damage.

ATTENTION

Hazardous voltage and other forms of energy could be present. To avoid serious injury or death:

Local facility safety procedures and maintenance guidelines must always be followed when troubleshooting the ElectroGuard® equipment.

ATTENTION

Hazardous energy could be present while troubleshooting the ElectroGuard® system. Proper personal protective equipment must be used and any precautions determined by your facility.

ATTENTION

Severe injury, death, property damage, or economic loss could occur if the system is not recommissioned after repair. Refer to Chapter 3, *Commissioning of the ElectroGuard® Safety Isolation System*, of this manual for proper commissioning.

Troubleshooting requires clear definition of the problem based upon the system fault symptoms. Clear problem definition and knowing the system status or operating conditions prior to the problem will narrow the scope of the troubleshooting. (i.e., Was the system in the normal running mode? Were Remote Lockout Stations being turned ON or OFF? Was there a power source problem?)

The Control Module, optional Expansion Module, and Pneumatic Isolation Module include indicator light status charts to assist in troubleshooting.

The use of the following documentation is highly recommended when troubleshooting the ElectroGuard® System:

- Troubleshooting Flowchart (Figure 4.1).
- Troubleshooting Tables (Tables 4.2…4.11).
- Indicator Light Status Charts supplied with the equipment.
- Electrical schematics supplied with the equipment.
- Operational Troubleshooting included in this chapter.

Field Repairs

ATTENTION

ElectroGuard® system modules are factory sealed with a tamper-indicating seal. Altering, defeating, or bypassing any module or component of the Safety Isolation System may result in personal injury, death, property damage, or economic loss. Only qualified service technicians must perform service or maintenance. Resealing of the modules is the responsibility of the person or organization performing the service or maintenance.

Troubleshooting Flowchart and Tables

It is recommended that troubleshooting of the SIS begin with the use of the following troubleshooting flowchart for a more systematic and modular approach. If additional information on the SIS mode of operation is needed, refer to the operational troubleshooting sections in this chapter.

Table 4.1
Troubleshooting Flowchart

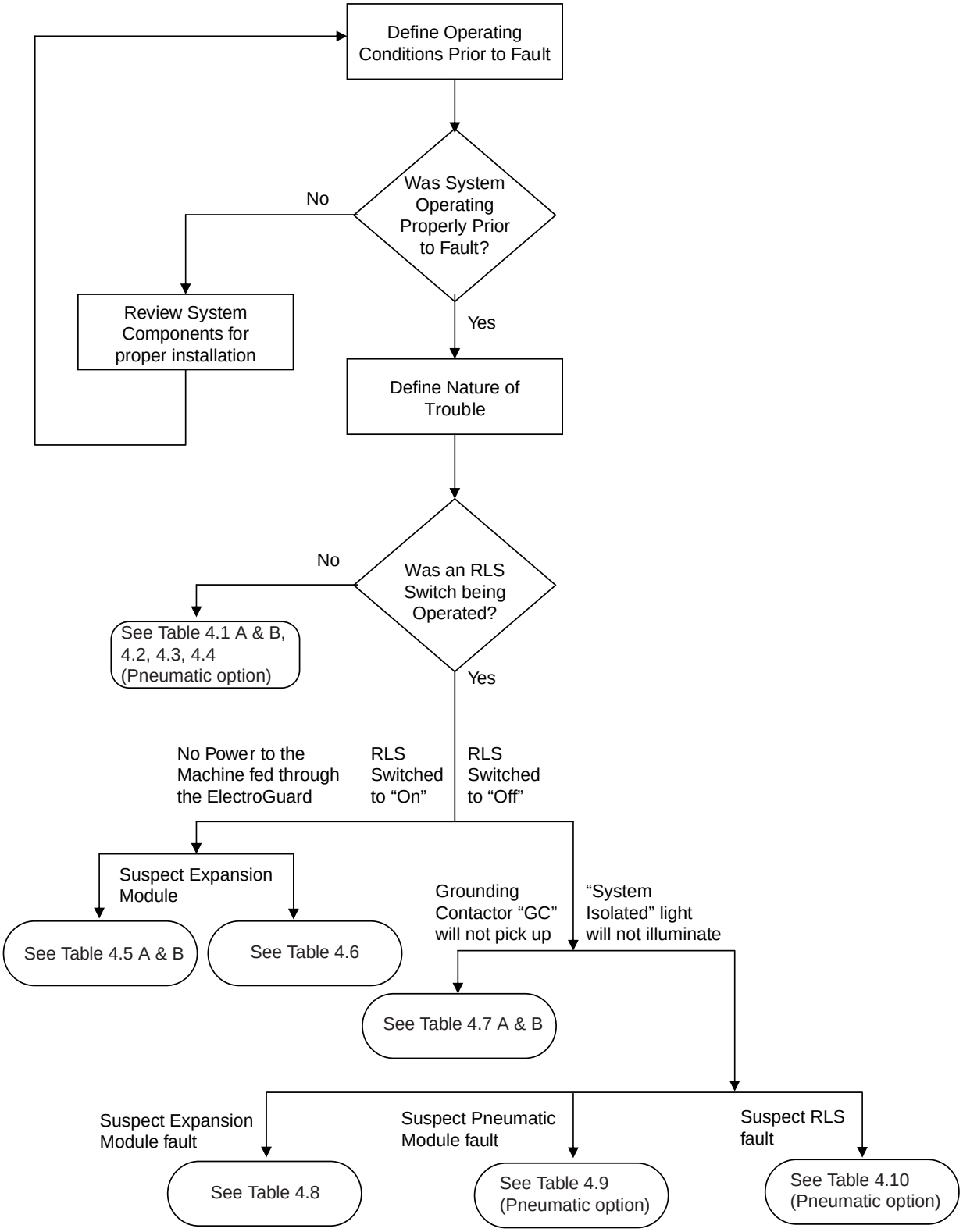

Table 4.2 A (23…85 A)
Was a Remote Lockout Station Switch Being Operated? (No) ❶

Problem	Component	Possible Cause	Check	Action
No Power to the machine fed through the ElectroGuard®	System coast-to-stop push-pull operator	Pushed In	System coast-to-stop push-pull operator status.	Pull or twist to reset the system coast-to-stop operator.
		Loose Wire	System Coast-to-Stop operator wiring.	Secure wiring.
	Control transformer	Shorted transformer	• Verify status of blown fuse indicator lights for 5FU, 6FU, and 7FU on the fuse holders. • Check control transformer terminals X1 and X2 for 120V AC.	Replace control transformer install appropriate size fuse(s). (see Chapter 6 — Replacement Procedures and Appendix E — Replacement Parts).
		Control transformer fuses (5FU, 6FU, 7FU) blown	• Verify status of blown fuse indicator lights for 5FU, 6FU, and 7FU on the fuse holders. • Check for loose wires or wire strands that may have shorted.	Replace and install appropriate size fuse(s). See the fuse label affixed on the ElectroGuard® Power Panel door.
		Loose connections in transformer circuit	Check transformer wiring.	Secure transformer wiring.
		Voltage feeding the transformer is OFF	Neon voltage indicator terminal blocks 1 and 2 ON when 120V AC is present.	Check that incoming power to the ElectroGuard® Power Panel is present.
	Isolated ground conductor	Loose connection	Verify the isolated ground conductor is connected to the isolated ground terminal block.	Connect isolated ground conductor to the isolated ground terminal block. See the torque label affixed on the ElectroGuard® Power Panel door
	Fuse 4FU	4FU fuse blown	Verify status of blown fuse indicator light for 4FU on the fuse holder.	• Replace 4FU with correct size fuse (replace only once). See the fuse label affixed on the ElectroGuard® Power Panel door. • Replace Control Module and return for repairs (see Field Repairs on page 4-3, Chapter 6 — Replacement Procedures, and Appendix E — Replacement Parts).
			Measure resistance between connection points IP1 (4) and HV(1). A resistance reading of less than 1,000 Ω would indicate a shorted relay coil for 1GCR or 2GCR.	Replace Control Module and return for repairs (see Field Repairs on page 4-3, Chapter 6— Replacement Procedures, and Appendix E — Replacement Parts).
	1SR safety relay	Defective 1SR safety relay	1SR power LED and the two green output LEDs (K1 and K2) should be illuminated (see Figure 4.2)	Replace Control Module and return for repairs (see Field Repairs on page 4-3, Chapter 6—Replacement Procedures, and appendix E—Replacement Parts).

❶ If system problem persists after checking the items outlined in this table, see Operational Troubleshooting of the ElectroGuard® Power Panel (23…85 A) on page 4-33.

Table 4.1A (23…85 A)
Was a Remote Lockout Station Switch Being Operated? (No) ❶ (Continued)

Problem	Component	Possible Cause	Check	Action
No Power to the machine fed through the ElectroGuard® (Continued)	Fuse 8FU	8FU fuse blown	Verify status of blown fuse indicator light for 8FU on the fuse holder.	• Replace 8FU fuse with appropriate size fuse (replace only once). See the fuse label affixed on the ElectroGuard® Power Panel door. • Replace Control Module and return for repairs (see Field Repairs on page 4-3, Chapter 6 — Replacement Procedures, and Appendix E — Replacement Parts).
			Measure resistance between connection points IP3(5) and HP1(2). A resistance reading of less than 150 Ω would indicate a short circuit has occurred.	Replace Control Module and return for repairs (see Field Repairs on page 4-3, Chapter 6 — Replacement Procedures, and Appendix E — Replacement Parts).
	Fuse 9FU	9FU fuse blown	Verify status of blown fuse indicator light for 9FU on the fuse holder.	• Replace 9FU fuse with appropriate size fuse (replace only once). See the fuse label affixed on the ElectroGuard® Power Panel Door. • Replace Control Module and return for repairs (see Field Repairs on page 4-3, Chapter 6 — Replacement Procedures, and Appendix E — Replacement Parts).
		Short on DC side of power supply	Disconnect an RLS connector plug in the Control Module and measure the resistance between connection points RLS(5) and RLS(10). A resistance reading of less than 1,000 Ω would indicate a short circuit has occurred.	Replace Control Module and return for repairs (see Field Repairs on page 4-3, Chapter 6 — Replacement Procedures, and Appendix E — Replacement Parts).
	HV connector plug	Loose connection	Check for loose connections on the HV connector plug.	Secure wire connections on the HV connector plug in the Control Module. See the torque label affixed on the ElectoGuard power Panel door. Replace Control Module and return for repairs (see Field Repairs on page 4-3, Chapter 6—Replacement Procedures and Appendix E—Replacement parts).

❶ If system problem persists after checking the items outlined in this table, see Operational Troubleshooting of the ElectroGuard® Power Panel (23…85 A) on page 4-33.

Table 4.1B (110…1200 A)
Was a Remote Lockout Station Switch Being Operated? (No)❶ (Continued)

Problem	Component	Possible Cause	Check	Action
No Power to the machine fed through the ElectroGuard®	System coast-to-stop push-pull operator	Pushed In	System coast-to-stop push-pull operator status.	Pull or twist to reset the system coast-to-stop operator.
		Loose Wire	System coast-to-stop operator wiring.	Secure wiring.
	Control transformer	Shorted transformer	• Verify status of blown fuse indicator lights for 4FU, 21FU, and 22FU on the fuse holders • Check control transformer terminals X1 and X2 for 120V AC.	Replace control transformer install appropriate size fuse(s). (See Chapter 6–Replacement Procedures and Appendix E—Replacement parts.)
		Control transformer fuses (4FU, 21FU, or 22FU) blown	Verify status of blown fuse indicator lights for 4FU, 21FU, and 22FU on the fuse holders	• Replace and install appropriate size fuse(s). See the fuse label affixed on the ElectroGuard® Power Panel door.
		Loose connections in transformer circuit	Check transformer wiring.	Secure transformer wiring.
		Voltage feeding the transformer is OFF.	Neon voltage indicator terminal blocks 1 and 2 ON when 120V AC is present.	Check that incoming power to the ElectroGuard® Power Panel is present.
	Isolated ground conductor	Loose connection	Verify the isolated ground conductor is connected to the isolated ground terminal block.	Connect isolated ground conductor to the isolated ground terminal block. See the torque label affixed on the ElectroGuard® Power Panel door.
	Fuse 4FU	4FU fuse blown	Verify status of blown fuse indicator light for 4FU on the fuse holder.	• Replace 4FU with appropriate size fuse (replace only once). See the fuse label affixed on the ElectroGuard® Power Panel door. • Replace Control module and return for repairs (see Filed Repairs on page 4-3, Chapter 6—Replacement Procedures, and appendix E—Replacement parts).
			Coil for relay 1GCR or 2GCR may be shorted. This cannot be verified without breaking the tamper-indicating seal on the Control Module.	Replace Control Module and return for repairs (see Field Repairs on page 4-3, Chapter 6—Replacement Procedures, and Appendix E—Replacement Parts).

❶ If system problem persists after checking the items outlined in this table, see Operational Troubleshooting of the ElectroGuard® Power Panel on page 4-40.

4.1B (110…1200 A)
Was a Remote Lockout Station Switch Being Operated? (No)❶ (Continued)

Problem	Component	Possible Cause	Check	Action
No Power to the machine fed through the ElectoGuard (Continued)	Fuse 5FU	5FU fuse blown	Verify status of blown fuse indicator light for 5FU on the fuse holder.	• Replace 5FU with appropriate size fuse (replace only once). See the fuse label affixed on the ElectroGuard® Power Panel door. • Replace Control Module and return for repairs (see Field Repairs on page 4-3, Chapter 6—Replacement Procedures, and Appendix E—Replacement Parts).
			Measure resistance between connection points HV(5) and IP1(4). A resistance reading of less than 1,000 Ω would indicate a shorted relay coil for 1MCR or 2MCR.	Replace Control Module and return for repairs (see Field Repairs on page 4-3, Chapter 6—Replacement Procedures, and Appendix E—Replacement Parts)
			Measure resistance between connection points IP1(3) and HV(6). A resistance reading of less than 100 Ω would indicate a shorted relay coil for 1SR or 4CR.	Replace Control Module and return for repairs (see Field Repairs on page 4-3, Chapter 6—Replacement Procedures, and Appendix E—Replacement Parts)
	1SR safety relay	Defective 1SR safety relay	1SR power LED and the two green output LEDs (K1 and K2) should be illuminated (see Figure 4.2)	Replace Control Module and return for repairs (see Field Repairs on page 4-3, Chapter 6—Replacement Procedures, and Appendix E—Replacement Parts)
	Fuse 6FU	6FU fuse blown	Verify status of blown fuse indicator light for 6FU on the fuse holder.	• Replace 6FU with appropriate size fuse (replace only once). See the fuse label affixed on the ElectroGuard® Power Panel door. • Replace Control Module and return for repairs (see Field Repairs on page 4-3, Chapter 6—Replacement Procedures, and Appendix E—Replacement Parts)
			Coil for relay DCCR, 1CR1, 2CR1, 1CR, 2CR, or 3CR may be shorted. This cannot be verified without breaking the tamper-indicating seal on the Control Module.	Replace Control Module and return for repairs (see Field Repairs on page 4-3, Chapter 6—Replacement Procedures, and Appendix E—Replacement Parts)
	Fuse 7FU	7FU fuse blown	Verify status of blown fuse indicator light for 7FU on the fuse holder.	• Replace 7FU with appropriate size fuse (replace only once). See the fuse label affixed on the ElectroGuard® Power Panel door. • Replace Control Module and return for repairs (see Field Repairs on page 4-3, Chapter 6—Replacement Procedures, and Appendix E—Replacement Parts)
			Coil for relay 5CR, 6CR, 7CR, 8CR, 11CR, or 12CR may be shorted. This cannot be verified without breaking the tamper-indicating seal	Replace Control Module and return for repairs (see Field Repairs on page 4-3, Chapter 6—Replacement Procedures, and Appendix E—Replacement Parts)

❶ If system problem persists after checking the items outlined in this table, see Operational Troubleshooting of the ElectroGuard® Power Panel (110…1200 A) on page 4-40.

Table 4.1B (110…1200 A)
Was a Remote Lockout Station Switch Being Operated? (No) ❶ (Continued)

Problem	Component	Possible Cause	Check	Action
No power to the machine fed through the ElectroGuard® (Continued)	Fuse 8FU	8FU fuse blown	Verify status of blown fuse indicator light for 8FU on the fuse holder.	• Replace 8FU with appropriate size fuse (replace only once). See the fuse label affixed on the ElectroGuard® Power Panel door. • Replace Control Module and return for repairs (see Field Repairs on page 4-3, Chapter 6 — Replacement Procedures, and Appendix E — Replacement Parts).
			Coil for relay 9CR, 10CR, VTCR, or GC1CR may be shorted. This cannot be verified without breaking the tamper-indicating seal	Replace Control Module and return for repairs (see Field Repairs on page 4-3, Chapter 6 — Replacement Procedures, and Appendix E — Replacement Parts).
	Fuse 9FU	9FU fuse blown	Verify status of blown fuse indicator light for 9FU on the fuse holder.	• Replace 9FU with appropriate size fuse (replace only once). See the fuse label affixed on the ElectroGuard® Power Panel door. • Replace Control Module and return for repairs (see Field Repairs on page 4-3, Chapter 6 — Replacement Procedures, and Appendix E — Replacement Parts).
			Measure resistance between connection points IP3(9) and HV(6) for 1IC; between IP3(10)and HV(6) for 2IC; between IP3(11) and HV(6) for GC. A resistance reading of less than 5 Ω would indicate a shorted contactor coil.	Replace power contactor (see Field Repairs on page 4-3, Chapter 6 — Replacement Procedures, and Appendix E — Replacement Parts).
			Visually check for loose, jammed or broken mechanical interlock between contactors 1IC, GC, and 2IC.	Replace mechanical interlock (see Field Repairs on page 4-3, Chapter 6 — Replacement Procedures, and Appendix E — Replacement Parts).
	Fuse 12FU	12FU fuse blown	Verify status of the blown fuse indicator light for 12FU on the fuse holder.	• Replace 12FU with appropriate size fuse (replace only once). See the fuse label affixed on the ElectroGuard® Power Panel door. • Replace Control Module and return for repairs (see Field Repairs on page 4-3, Chapter 6 — Replacement Procedures, and Appendix E — Replacement Parts).
		Short on input side of DC power supply	Measure resistance between connection points HP1(4) and HV(6). A resistance reading of less than 150 Ω would indicate a short circuit has occurred.	Replace Control Module (see Field Repairs on page 4-3, Chapter 6 — Replacement Procedures, and Appendix E — Replacement Parts).

❶ If system problem persists after checking the items outlined in this table, see Operational Troubleshooting of the ElectroGuard® Power Panel (110…1200 A) on page 4-40.

Table 4.1B (110…1200 A)
Was a Remote Lockout Station Switch Being Operated? (No) ❶ (Continued)

Problem	Component	Possible Cause	Check	Action
No power to the machine fed through the ElectroGuard® (Continued)	Fuse 13FU	13FU fuse blown	Verify status of the blown fuse indicator light for 13FU on the fuse holder.	• Replace 13FU with appropriate size fuse (replace only once). See the fuse label affixed on the ElectroGuard® Power Panel door. • Replace Control Module and return for repairs (see Field Repairs on page 4-3, Chapter 6 — Replacement Procedures, and Appendix E — Replacement Parts).
		Short on DC side of power supply	Disconnect an RLS connector plug in the Control Module and measure the resistance between connection points RLS(5) and RLS(10). A resistance reading of less than 1,000 Ω would indicate a short circuit has occurred.	Replace Control Module (see Field Repairs on page 4-3, Chapter 6 — Replacement Procedures, and Appendix E — Replacement Parts).
	Fuse 14FU	14FU fuse blown	Verify status of the blown fuse indicator light for 14FU on the fuse holder.	Replace 14FU with appropriate size fuse (replace only once). See the fuse label affixed on the ElectroGuard® Power Panel door.
			Coil for relay 3SR, 4SR, or 5SR shorted. This can not be verified without breaking the tamper-indicating seal.	Replace Control Module (see Field Repairs on page 4-3, Chapter 6 — Replacement Procedures, and Appendix E — Replacement Parts).
	Fuse 16FU	16FU fuse blown	Verify status of the blown fuse indicator light for 16FU on the fuse holder.	Replace 16FU with appropriate size fuse (replace only once). See the fuse label affixed on the ElectroGuard® Power Panel door.
			Coil for relay 2SR or 2ASR shorted. This can not be verified without breaking the tamper-indicating seal.	Replace power contactor (see Field Repairs on page 4-3, Chapter 6 — Replacement Procedures, and Appendix E — Replacement Parts).
	HV connector plug	Loose connection	Check for loose connections on the HV connector plug.	• Secure wire connections on the HV connector plug in the Control Module. See the torque label affixed on the ElectroGuard® Power Panel door. • Replace Control Module and return for repairs (see Field Repairs on page 4-3, Chapter 6 — Replacement Procedures, and Appendix E — Replacement Parts).

❶ If system problem persists after checking the items outlined in this table, see Operational Troubleshooting of the ElectroGuard® Power Panel (110…1200 A) on page 4-40.

Table 4.3 (23… 85 A) & (110…1200 A) with Pneumatic Option
Was an RLS Switch Being Operated? (No)❶

Problem	Component	Possible Cause	Check	Action
Pneumatic Isolation Module will not reset and prevents compressed air from reaching the outgoing air line connection after ElectroGuard® system ON push button has been pressed.	AC PWR neon indicator light in pneumatic module is ON (see Figure 4.1 and Table 4.4) but module does not operate	Loose or open connection between Control Module and Pneumatic Isolation Module	• Check wiring on connector plug HC on the Pneumatic Isolation Module • Check wiring on connector plugs HP1 and HP2 in the Control Module.	Repair or tighten connector plugs or plug wiring as needed and retest ElectroGuard® for proper operation and isolation. See the torque label affixed on the ElectroGuard® Power Panel door.
		Pneumatic Isolation Module not providing contact input information.	Install temporary test jumper wires on connector plug HP1 connector points as indicated below ❷: • 5 to 6 • 7 to 8 • 9 to 10 (see Figure 4.12)	Test operate ElectroGuard® and if electrical isolation is achieved, replace Pneumatic Isolation Module and return for repairs (see Field Repairs on page 4-3, Chapter 6—Replacement Procedures, and Appendix E—Replacement Parts).
		Power Panel Control Module is not providing correct contact input information.	With the ElectroGuard® powered up, but in OFF mode, check continuity at connector plug HP2 connection points (see Table 4.2)	Repair per Table 4.2
	AC PWR neon indicator light in Pneumatic Isolation Module is OFF (see Figure 4.1 and Table 4.4)	Loose connection at HP1 or HP2 Control Module connector plugs.	Check connector plugs HP1 and HP2 are completely inserted.	Push connector plugs firmly into the terminal blocks to secure connections.
		Loose wire on HP1 connector plug connection points 1 or 2.	Check that all wires on connector plug HP1 are securely attached.	Tighten or reconnect any loose connector plug wires. See the torque label affixed on the ElectroGuard® Power Panel door.
		120V AC is missing between connector plug HP1 connection points 1 and 2.	Measure voltage between connector plug HP1 connection points 1 and 2.	Replace Control Module if 120V AC control voltage is not present, and return for repairs (see Field Repairs on page 4-3, Chapter 6—Replacement Procedures, and Appendix E—Replacement Parts).
		Defective neon indicator light or internal wiring in Pneumatic Isolation module.	—	Replace Pneumatic Isolation Module and return for repairs
	Incoming source air pressure to Pneumatic Isolation Module inlet fitting is missing.	Compressed air source is OFF.	Check whether source air compressor is still ON.	Restart compressor to restore air pressure to Pneumatic Isolation Module.
		Upstream air valve is turned OFF.	Check status of all upstream air lockout valves.	Reopen lockout valves in upstream air line feeding the Pneumatic Isolation Module.
		Broken or disconnected upstream air line.	Check for broken air line or open air fitting.	Repair or reconnect compressed air line to restore air pressure to Pneumatic Isolation Module.

❶ If system problem persists after checking the items outlined in this table, see Operational Troubleshooting of the ElectroGuard® Power Panel (23…85 A) on page 4-33 and (110…1200 A) on page 4-40.

❷ When finished testing, remove all temporary jumper wires and re-install unplugged connector plugs.

Figure 4.1
Pneumatic Isolation Module Status Light Explanation Chart

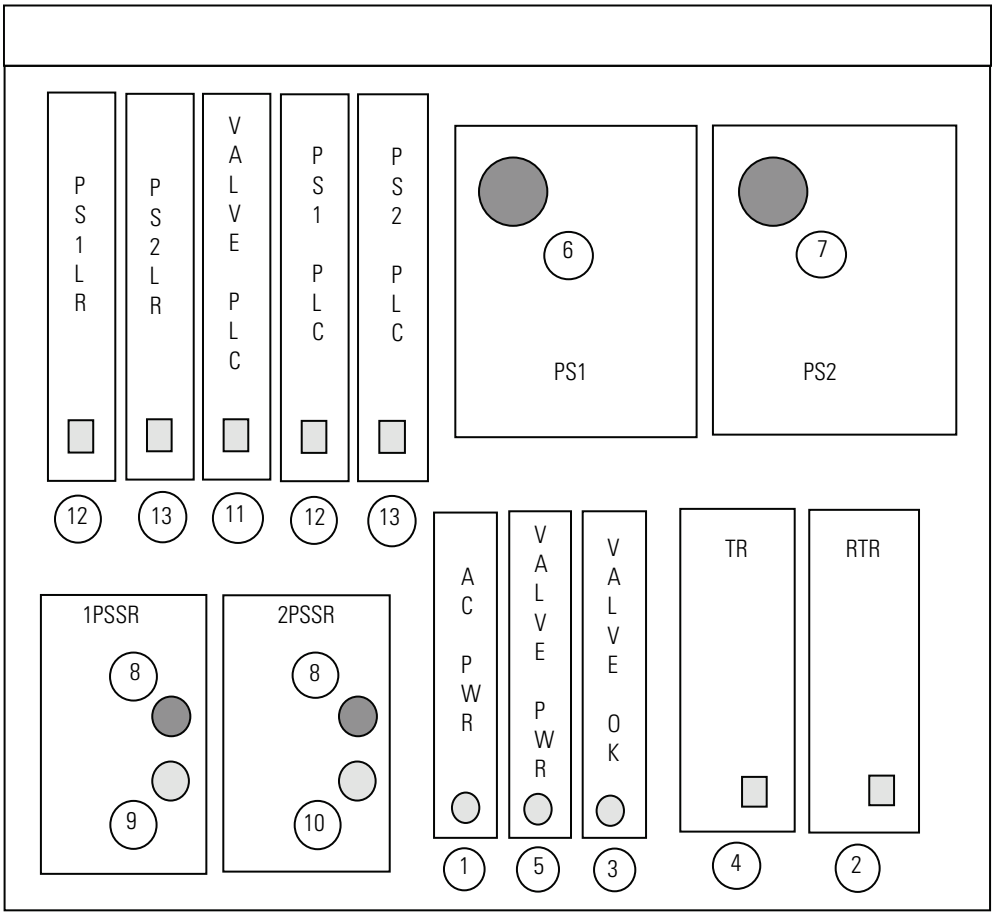

Table 4.4 (23… 85 A) & (110… 1200 A) with Pneumatic Option Pneumatic Isolation Module Status Light Explanation Chart

INITIAL MODE (Power and Air Pressure Applied)				
ITEM	**COMPONENT LABEL**	**LIGHT TYPE**	**LIGHT STATUS DESCRIPTION**	
1	AC PWR	NEON TB	ON	Indicates 120V AC is being supplied by the ElectroGuard® Power Panel control circuit transformer
RUN MODE (After the "SYSTEM ON" PB pushed, all RLS ON)				
2	RTR (One shot)	LED (Green)	ON	For one second, timer enabled by Control Module, energizes safety valve reset solenoid
11	VALVE PLC	LED (Green)	ON	On for one second while timer RTR energizes safety valve reset solenoid
3	VALVE OK	NEON TB	ON	The valve resets after safety valve reset solenoid is operated while inlet air pressure is present
4	TR	LED (Green)	ON	Three second flash, then steady, timer energizes valve solenoids A and B which opens safety valve
5	VALVE PWR	NEON TB	ON	Indicates 120V AC is being supplied to operate safety valve solenoids A and B
6	PS1	NEON (Red)	ON	When pressure switch senses outlet air pressure above 20 psi and relay PS1LR is OFF
7	PS2	NEON (Red)	ON	When pressure switch senses outlet air pressure above 20 psi and relay PS2LR is OFF
LOCKOUT MODE (After a Remoter Lockout Station is turned OFF)				
5	VALVE PWR	NEON TB	OFF	After contactor "GC" in ElectroGuard® Power Panel is energized, an auxiliary contact removes 120V AC from solenoids A and B
3	VALVE OK	NEON TB	ON	While solenoids A and B are de-energized and safety valve fault mechanism does not sense a fault
8	1PSSR, 2PSSR (POWER)	LED (Red)	ON	When 120V AC is supplied by PSCR relay contact after PSCR is energized by Control Module input
9	1PSSR (OUTPUT)	LED (Green)	ON	When 120V AC is supplied and relay circuit S13 to S14 is closed and circuit S21 to S22 is opened after PS1 senses outlet air pressure 5 psi or less
10	1PSSR (OUTPUT)	LED (Green)	ON	When 120V AC is supplied and relay circuit S13 to S14 is closed and circuit S21 to S22 is opened after PS2 senses outlet air pressure 5 psi or less
12	PS1LR, PS1 PLC	LED (Green)	ON	When relays are energized by pressure switch PS1 contact closing
13	PS2LR, PS2 PLC	LED (Green)	ON	When relays are energized by pressure switch PS2 contact closing
6	PS1	NEON (Red)	OFF	When pressure switch senses outlet air pressure 5 psi or less and relay PS1LR is ON
7	PS2	NEON (Red)	OFF	When pressure switch senses outlet air pressure 5 psi or less and relay PS2LR is ON
FAULT MODE (Safety Valve not reset)				
11	VALVE PLC	LED (Green)	ON	When safety valve fault mechanism senses an air pressure or valve fault and prevents valve reset

Table 4.5 (23…85 A) & (110…1200 A) with Pneumatic Option
Connector Plugs HP1 and HP2 with all Remote Lockout Stations ON ❶

System Status for Continuity Checking	Check Connector Plugs between Connection Points	Continuity Check Must Read as Listed	Action
ElectroGuard® in OFF mode, connector plug HP1 should be unplugged and connector plug HP2 should remain plugged in to the Control Module terminal block assembly	Plug HP2 terminals 1 and 2	OPEN (Infinite Resistance)	• If closed, check for shorted wire strands between HP2 plug terminals 1 and 2. • If wire connections are correct, the pneumatic module needs to be replaced (see Field Repairs on page 4-3, Chapter 6— Replacement Procedures, and Appendix E — Replacement Parts).
	Plug HP2 terminals 3 and 4	OPEN (Infinite Resistance)	
ElectroGuard® in OFF mode, connector plug HP1 should be unplugged and connector plug HP2 should now be unplugged for this check	Plug HP1 terminals 1 and 2	OPEN (Infinite Resistance)	• If closed, check for shorted wire strands between HP1 plug terminals 1 and 2. • If wire connections are correct and resistance measured is above the given limit, the pneumatic module needs to be replaced (see Field Repairs on page 4-3, Chapter 6— Replacement Procedures, and Appendix E — Replacement Parts).
	Plug HP1 terminals 3 and 4	OPEN (Infinite Resistance)	• If closed, check for shorted wire strands between HP1 plug terminals 3 and 4. • If wire connections are correct, the pneumatic module needs to be replaced (see Field Repairs on page 4-3, Chapter 6— Replacement Procedures, and Appendix E — Replacement Parts).
	Plug HP1 terminals 5 and 6	Measure resistance between terminals 5 and 6. It should be less than 10 Ω.	• If resistance is incorrect, check wire connections at HP1 terminals 5 and 6. • If wire connections are correct, the pneumatic module needs to be replaced (see Field Repairs on page 4-3, Chapter 6— Replacement Procedures, and Appendix E— Replacement Parts).
	Plug HP1 terminals 7 and 8	OPEN (Infinite Resistance)	• If closed, check for shorted wire strands between HP1 plug terminals 7 and 8. • If wire connections are correct, the pneumatic module needs to be replaced (see Field Repairs on page 4-3, Chapter 6— Replacement Procedures, and Appendix E— Replacement Parts).
	Plug HP1 terminals 9 and 10	OPEN (Infinite Resistance)	• If closed, check for shorted wire strands between HP1 plug terminals 9 and 10. • If wire connections are correct, the pneumatic module needs to be replaced (see Field Repairs on page 4-3, Chapter 6— Replacement Procedures, and Appendix E— Replacement Parts).

❶ When finished testing, re-install unplugged connector plugs.

Table 4.6 A (23…85 A)
Was a Remote Lockout Station Switch Being Operated? (Yes – to ON) ❶

Problem	Component	Possible Cause	Check	Action
No power to the machine fed through the ElectroGuard® (RLS switched to ON)	RLS connector plug	Loose wire in RLS or RLS connector plug	Check that RLS connector plugs are completely inserted.	Push RLS connector plugs firmly into the terminal blocks to secure connections.
			• Check wiring to the RLS connector plugs in the Control Module. • Check wiring in the RLS.	Use RLS connector plug with connection points 3 and 8, 4 and 9 jumpered to isolate the incorrectly wired RLS. See Figure 4.11. Once the incorrectly wired RLS has been isolated, check for continuity between connection points 3 and 8, 4 and 9, and 2 and 7 at the terminal block in the RLS. See RLS schematic to secure any loose wires. Replace RLS load switch assembly. see Chapter 6 — Replacement Procedures and Appendix E– Replacement Parts).
	1IC, 2IC	Open connection in the coil circuitry	Check wiring at the 1IC and 2IC contactor coils	Secure wiring to the 1IC and 2IC contactor coils. See Figure 4.13 (see Field Repairs on page 4-3, Chapter 6— Replacement Procedures, and Appendix E— Replacement Parts).
			Check wiring on the IP3 connector plug connection points 5 and 6.	Secure wiring to the connector plug IP3 connection points 5 and 6.
	2TR, 3TR timers (time delay option)	Loose wire on timer circuits	Check wiring to the 2TR and 3TR timer modules.	Secure wiring to the 2TR or 3TR timer modules. See Figure 4.13. (see Field Repairs on page 4-3, Chapter 6— Replacement Procedures, and Appendix E— Replacement Parts).
		Faulty timer	Check wiring to the IP3 connector plug connection points 5 and 6.	Replace timer. See Figure 4.13. (see Field Repairs on page 4-3, Chapter 6— Replacement Procedures, and Appendix E— Replacement Parts).
	Pneumatic module connector (if applicable)	Faulty or open connection between Control Module and pneumatic module (if applicable)	• Check wiring on the HC connector on the pneumatic module. • Check wiring on the HP1 and the HP2 connector plugs in the Control Module.	Use the HP1 connector plug in the Control Module with connection points 5 and 6, 7 and 8, 9 and 10 jumpered to help isolate the pneumatic module. See Figure 4.12. See (23…85 A) on page 4-32.

❶ If system problem persists after checking the items outlined in this table, see Operational Troubleshooting of the ElectroGuard® Power Panel (23…85 A) on page 4-33.

Table 4.5A (23…85 A)
Was a Remote Lockout Station Switch Being Operated? (Yes – to ON) ❶ (Continued)

Problem	Component	Possible Cause	Check	Action
No power to the machine fed through the ElectroGuard® (RLS switched to ON) (Continued)	Fuse 9FU	9FU fuse blown	Verify status of blown fuse indicator light for 9FU on the fuse holder.	• Replace 9FU with appropriate size fuse (only Once) • Replace Control Module and return for repairs. (see Field Repairs on page 4-3, Chapter 6 — Replacement Procedures, and Appendix E— Replacement Parts).
		Short on DC Side of Power Supply	Disconnect an RLS connector plug in the Control Module and measure the resistance between connection points RLS 5 and RLS 10. A resistance reading of less than 1,000 Ω would indicate a short circuit has occurred.	Replace Control Module and return for repairs. (see Field Repairs on page 4-3, Chapter 6 — Replacement Procedures, and Appendix E— Replacement Parts).
	24V DC power supply	24V DC not available	Check 24V DC indicating light on power supply.	Replace Control Module and return for repairs. (see Field Repairs on page 4-3, Chapter 6 — Replacement Procedures, and Appendix E— Replacement Parts).
	2SR safety relay	Faulty 2SR safety relay	2SR Power LED and CH1, and CH2, should be ON (see Figure 4.2)	Replace Control Module and return for repairs. (see Field Repairs on page 4-3, Chapter 6 — Replacement Procedures, and Appendix E— Replacement Parts).
	Mechanical Interlock	Loose or broken interlock	Visually check interlock for physical damage	The mechanical interlock may need to be replaced. See Figure 4.13. See Field Repairs on page 4-3, Chapter 6— Replacement procedures, and Appendix E—Replacement parts.)
	Rectifier A, Rectifier B, or Rectifier C	Defective rectifier	Verify status of blown fuse indicator light for 1FU, 2 FU, or 3 FU on the fuse holder	Replace Control Module and return for repairs. (See Field Repairs on page 4-3, Chapter 6—Replacement Procedures, and Appendix E—Replacement Parts.)
	Expansion Module	Faulty Expansion Module or RLS connected to Expansion Module	Connector plug at the Control Module	• Use RLS connector plug with connection points 3 and 8, and 4 and 9 to isolate the faulty Expansion Module. • See Expansion Module: Was a Remote Lockout Station Switch being operated? (Yes–to ON) ❶on page 4-20.

❶If system problem persists after checking the items outlined in this table, see Operational Troubleshooting of the ElectroGuard® Power Panel (23…85 A) on page 4-33.

Table 4.5B (110…1200 A)
Was a Remote Lockout Station Switch Being Operated? (Yes – to ON) ❶ (Continued)

Problem	Component	Possible Cause	Check	Action
No power to the machine fed through the ElectroGuard® (RLS switched to ON) (Continued)	RLS connector plug	Loose wire in RLS or RLS connector plug	Check that RLS connector plugs are completely inserted.	Push RLS connector plugs firmly into the terminal blocks to secure connections.
			• Check wiring to the RLS connector plugs in the Control Module. • Check wiring in the RLS.	Use RLS connector plug with connection points 3 and 8, and 4 and 9 jumpered to isolate the incorrectly wired RLS ❷. See Figure 4.11. Once the incorrectly wired RLS has been isolated, check for continuity between connection points 3 and 8, 4 and 9, and 2 and 7 at the terminal block in the RLS. See RLS schematic to secure any loose wires. Replace RLS load switch assembly. (see Chapter 6—Replacement Procedures and Appendix E—Replacement Parts.)
	1IC, 2IC	Open connection in the coil circuitry	Check wiring at the 1IC and 2IC contactor coils	Secure wiring to the 1IC and 2IC Contactor coils. See Figure 4.13. (see Field Repairs on page 4-3, Chapter 6—Replacement procedures, and Appendix E—Replacement parts).
			Check wiring on the IP3 connector plug connection pints 5 and 6.	Secure wiring to the connector plug IP3 connection pints 5 and 6.
	2TR, 3TR timers (time delay option)	Loose wire on timer circuits	Check wiring to the 2TR and 3TR timer modules.	Secure wiring to the 2TR or 3TR timer modules. See Figure 4.13. (see Filed Repairs on page 4-3, Chapter 6—Replacement procedures, and Appendix E—Replacement Parts).
		Faulty timer	—	Replace timer. See Figure 4.13 (see Field Repairs on page 4-3, Chapter 6—Replacement procedures, and Appendix E—Replacement Parts).
	Pneumatic Module connector (if applicable)	Faulty or open connection between Control Module and pneumatic module (if applicable)	• Check wiring on the HC connector on the pneumatic module. • Check wiring on the HP1 and the HP2 connector plugs in the Control Module.	Use the HP1 connector plug in the Control Module with connection points 5 and 6, 7 and 8, 9 and 10 jumpered to help isolate the pneumatic module. See Figure 4.13. See Operational Troubleshooting of the Pneumatic Isolation Module on page 4-32.

❶ If system problem persists after checking the items outlined in this table, see Operational Troubleshooting of the ElectroGuard® Power Panel (23…85 A) on page 4-33 and (110…1200 A) on page 4-40.

❷ When finished testing, remove all temporary jumper wires and re-install unplugged connector plugs.

Table 4.5B (110… 1200 A)
Was a Remote Lockout Station Switch Being Operated? (Yes–to ON) ❶(Continued)

Problem	Component	Possible Cause	Check	Action
No power to the machine fed through the ElectroGuard® (RLS switched to ON) (continued)	Fuse 13FU	13FU fuse blown	Verify status of blown fuse indicator light for 13FU on the fuse holder.	Replace 13FU with appropriate size fuse (replace only once). Replace Control Module and return for repairs. (see Field Repairs on page 4-3, Chapter 6—Replacement Procedures, and Appendix E—Replacement Parts).
		Short on DC side of power supply	Disconnect an RLS connector plug in the Control Module and measure the resistance between connection points RLS5 and RLS10. A resistance reading of less than 1,000 Ω would indicate a short circuit has occurred. ❷	Replace Control Module and return for repairs. (see Field Repairs on page 4-3, Chapter 6—Replacement Procedures, and Appendix E—Replacement Parts).
	24V DC power supply	24V DC not available	Check 24V DC LED indicator on power supply.	Replace Control Module and return for repairs. (see Field Repairs on page 4-3, Chapter 6—Replacement Procedures, and Appendix E—Replacement Parts).
	2SR safety relay	Faulty 2SR safety relay	2SR power LED and CH1 and CH2 should be ON (see Figure 4.3).	Replace Control Module and return for repairs. (see Field Repairs on page 4-3, Chapter 6—Replacement Procedures, and Appendix E—Replacement Parts).
	2ASR safety relay	Faulty 2ASR safety relay	2ASR power LED and CH1 and CH2 should be ON (see Figure 4.3)	Replace Control Module and return for repairs. (see Field Repairs on page 4-3, Chapter 6—Replacement Procedures, and Appendix E—Replacement Parts).
	3SR safety relay	Faulty 3SR safety relay	3SR power LED should be ON (see Figure 4.4)	Replace Control Module and return for repairs. (see Field Repairs on page 4-3, Chapter 6—Replacement Procedures, and Appendix E—Replacement Parts).
	4SR safety relay	Faulty 4SR safety relay	4SR power LED should be ON (see Figure 4.4)	Replace Control Module and return for repairs. (see Field Repairs on page 4-3, Chapter 6—Replacement Procedures, and Appendix E—Replacement Parts).

❶ If system problem persists after checking the items outlined in this table, see Operational Troubleshooting of the ElectroGuard® Power Panel (23…85 A) on page 4-33 and (110…1200 A) on page 4-40.

❷ When finished testing, remove all temporary jumper wires and re-install unplugged connector plugs.

Table 4.5B (110…1200 A)
Was a Remote Lockout Station Switch Being Operated? (Yes–to ON)❶ (Continued)

Problem	Component	Possible Cause	Check	Action
No power to the machine fed through the ElectroGuard® (RLS switched to ON) (Continued)	5SR safety relay	Faulty 5SR safety relay	5SR power LED and CH1 and CH2 should be ON (see Figure 4.5)	Replace Control Module and return for repairs. (see Field Repairs on page 4-3, Chapter 6—Replacement Procedures, and Appendix E—Replacement Parts).
		Faulty mirror auxiliary contactor GC	Check for welded or broken auxiliary contact	Replace mirror auxiliary contact on power contactor GC. (see Field Repairs on page 4-3, Chapter 6—Replacement Procedures, and Appendix E—Replacement Parts).
	Mechanical Interlock	Loose or broken interlock	Visually check interlock for physical damage	The mechanical interlock may need to be replaced. (see Field Repairs on page 4-3, Chapter 6—Replacement Procedures, and Appendix E—Replacement Parts).
	Rectifier A, Rectifier B, or Rectifier C	Defective rectifier	Verify status of blown fuse indicator light for 1FU, 2FU, or 3FU on the fuse holder.	Replace Control Module and return for repairs. (see Field Repairs on page 4-3, Chapter 6—Replacement Procedures, and Appendix E—Replacement Parts).
	Expansion Module	Faulty Expansion Module or RLS connected to Expansion Module	Connector plug at the Control Module	• Use RLS connector plug with connection points 3 and 8, 4 and 9 jumpered to isolate the faulty Expansion Module.❷ See Figure 4.11. • Refer to Table 4.7.

❶ If system problem persists after checking the items outlined in this table, see Operational Troubleshooting of the ElectroGuard® Power Panel (23…85 A) on page 4-33 and (110…1200 A) on page 4-40.

❷ When finished testing, remove all temporary jumper wires and re-install unplugged connector plugs.

Table 4.7
Expansion Module: Was a Remote Lockout Station Switch Being Operated? (Yes – to ON) ❶

Problem	Component	Possible Cause	Check	Action
No power to the machine fed through the ElectroGuard® (RLS switched to ON)	2FU	2FU fuse blown	Verify status of blown fuse indicator light for 2FU on the fuse holder.	• Replace 2FU with appropriate size fuse (replace only once). • Replace Expansion Module and return for repairs (see Field Repairs on page 4-3, Chapter 6 — Replacement Procedures, and Appendix E— Replacement Parts)
	SR safety relay in Expansion Module	Faulty SR safety relay	SR Power LED and CH1, CH2, K1, and K2 should be ON (see Figure 4.9).	Measure the resistance between connection point EXB(10) and top of 2FU fuse holder. If the resistance is very large or infinite, the SR safety relay needs to be replaced. Replace Expansion Module and return for repairs (see Field Repairs on page 4-3, Chapter 6 — Replacement Procedures, and Appendix E— Replacement Parts).
		2FU fuse in Expansion Module blown	Verify status of blown fuse indicator light for 2FU on the fuse holder.	• Replace 2FU fuse with appropriate size fuse (replace only once). • Replace Expansion Module and return for repairs (see Field Repairs on page 4-3, Chapter 6 — Replacement Procedures, and Appendix E— Replacement Parts).
	RLS connector plug(s) in Expansion Module	Connector plug with jumper wires not installed in unused RLS port(s)	Verify connector plug with jumper wires connected from terminals 3 to 8 and 4 to 9.	Wire jumpers correctly. (see Figure 4.11)
		RLS connector plugs not wired properly	Verify all RLSs are wired properly.	Wire RLS connector plugs correctly.
		RLS connector plug(s) not properly inserted	Verify all RLS connector plugs are properly inserted.	Push RLS connector plug into receptacle until properly seated.
	Wiring cable between Control Module and Expansion Module or between series connected Expansion Modules	Incorrect wiring	Check wire connections by performing a point-to-point test on connection points.	Correct wiring.

❶ If system problem persists after checking the items outlined in this table, see Operational Troubleshooting of the ElectroGuard® Power Panel (23…85 A) on page 4-33 or (110…1200 A) on page 4-40.

Table 4.6
Expansion Module: Was a Remote Lockout Station Switch Being Operated? (Yes – to ON) ❶

Problem	Component	Possible Cause	Check	Action
Control stop signal not closing (Expansion Module with time delay)	Fuse 3FU	3FU fuse blown	Verify status of blown fuse indicator light for 3FU on the fuse holder.	• Replace 3FU with appropriate size fuse (replace only once). See the fuse label affixed on the ElectroGuard® Power panel door. • Replace Expansion Module and return for repairs (see Field Repairs on Page 4-3, Chapter 6—Replacement Procedures, and appendix E—Replacement Parts).
	Safety relay SR	Faulty SR safety relay	SR Power LED and CH1, CH2, K1, and K2 should be ON (see Figure 4.9).	Measure the resistance between connection point EXB(10) and top of 2FU fuse holder. If the resistance is very large or infinite, the SR safety relay needs to be replaced. Replace Expansion Module and return for repairs (see Field Repairs on Page 4-3, Chapter 6—Replacement Procedures, and Appendix E—Replacement parts).
	Wiring cable between Control Module and Expansion Module	Incorrect wiring	Check wire connections by performing a point-to-point test on connection points.	Correct wiring.

❶ If system problem persist after checking the items outlined in this table, see Operational Troubleshooting of the ElectroGuard® Power Panel (23…85 A) on page 4-33 or (110…1200 A) on page 4-40.

Table 4.8 A (23…85 A)
Was a Remote Lockout Station Switch Being Operated? (Yes – to OFF)❶

Problem	Component	Possible Cause	Check	Action
Grounding contactor GC will not pick up (RLS switched to OFF)	• 24V DC power supply is OFF • Indicating light on power supply is OFF	Control transformer 120V AC input to power supply is missing	Verify that primary and secondary voltages are present.	Replace control transformer. (see Chapter 6 — Replacement Procedures and Appendix E— Replacement Parts).
			Verify status of blown fuse indicator light for 5FU, 6FU, or 7FU on fuse holder.	• Check for loose wires or wire strands that may have shorted. • Replace 5FU, 6FU, or 7FU fuse with appropriate size fuse (replace only once). • Replace Control Module and return for repairs (see Field Repairs on page 4-3, Chapter 6 — Replacement Procedures, and Appendix E— Replacement Parts).
	Relays ACR, BCR, CCR, and VTCR	Voltage decay relays ACR, BCR, CCR, and VTCR have not dropped out	Measure voltage on load side of 2IC for low voltage (below 70V AC).	Wait until voltage decays to safe level for relay drop out.
			Relays may have welded, preventing drop out.	Replace Control Module and return for repairs (see Field Repairs on page 4-3, Chapter 6 — Replacement Procedures, and Appendix E— Replacement Parts).
	GC grounding contactor coil	Open connection in the coil circuitry	Check wiring at the IP3 connector plug connection point 11.	Secure wiring to the IP3 connector plug connection point 11.
		Faulty contacts		Replace GC contactor. See Figure 4.13 and See Field Repairs page 4-3, Chapter 6 – Replacement Procedures and Appendix E– Replacement Parts.
	Fuse 8FU	8FU fuse blown	Verify status of blown fuse indicator light for 8FU on the fuse holder.	• Replace 8FU fuse with appropriate size fuse (replace only once). • Replace Control Module and return for repairs (see Field Repairs on page 4-3, Chapter 6 — Replacement Procedures, and Appendix E— Replacement Parts).
			Measure resistance between connection points IP3(5) and HP1(2). A resistance reading of less than 150 Ω would indicate a short circuit has occurred.	Replace Control Module and return for repairs (see Field Repairs on page 4-3, Chapter 6 — Replacement Procedures, and Appendix E— Replacement Parts)
	Mechanical interlock	Loose or broken interlock	Visually check interlock for physical damage.	Replace mechanical interlock. See Figure 4.13. See Field Repairs on page 4-3, Chapter 6 — Replacement Procedures, and Appendix E— Replacement Parts)

❶ If system problem persists after checking the items outlined in this table, see Operational Troubleshooting of the ElectroGuard® Power Panel (23…85 A) on page 4-33.

Table 4.7A (23…85 A)
Was a Remote Lockout Station Switch Being Operated? (Yes – to OFF) ❶ (Continued)

Problem	Component	Possible Cause	Check	Action
Grounding contactor GC will not pick up (RLS switched to OFF)	6CR	Relay 6CR did not energize	Contactors 1IC and 2IC did not drop out due to welded contact.	Replace 1IC or 2IC (see Field Repairs on page 4-3, Chapter 6 — Replacement Procedures, and Appendix E— Replacement Parts).
			Relay VTCR did not energize due to ACR, BCR, or CCR not picking up.	Replace Control Module and return for repairs (see Field Repairs on page 4-3, Chapter 6 — Replacement Procedures, and Appendix E— Replacement Parts).
			6CR control circuit wiring defective.	Replace Control Module and return for repairs (see Field Repairs on page 4-3, Chapter 6 — Replacement Procedures, and Appendix E— Replacement Parts).
			6CR coil open, or defective hold-in contact.	Replace Control Module and return for repairs (see Field Repairs on page 4-3, Chapter 6 — Replacement Procedures, and Appendix E— Replacement Parts).
	3CR	Relay 3CR will not drop out	Relay may have a welded contact which is preventing drop out	Replace Control Module and return for repairs (see Field Repairs on page 4-3, Chapter 6 — Replacement Procedures, and Appendix E— Replacement Parts).
	11CR	Relay 11CR did not energize	6CR contact did not energize.	Replace Control Module and return for repairs (see Field Repairs on page 4-3, Chapter 6 — Replacement Procedures, and Appendix E— Replacement Parts).
		11CR contacts did not close	11CR coil open	
			11CR contact not closing due to weld.	

❶ If system problem persists after checking the items outlined in this table, see Operational Troubleshooting of the ElectroGuard® Power Panel (23…85 A) on page 4-33.

Table 4.7B (110…1200 A)
Was a Remote Lockout Station Switch Being Operated? (Yes – to OFF)❶

Problem	Component	Possible Cause	Check	Action
Grounding contactor GC will not pick up (RLS switched to OFF)	• 24V DC power supply is OFF • Power LED indicator on power supply is OFF	Control transformer 120V AC input to power supply is missing	Verify that primary and secondary voltages are present.	Replace control transformer. (see Chapter 6 — Replacement Procedures and Appendix E— Replacement Parts).
			Verify status of blown fuse indicator light for 7FU, 21FU, or 22FU on fuse holder.	• Replace 5FU, 6FU, 7FU, 21FU, or 22FU fuse with appropriate size fuse (replace only once). • Replace Control Module and return for repairs (see Field Repairs on page 4-3, Chapter 6 — Replacement Procedures, and Appendix E— Replacement Parts).
	Relays ACR, BCR, CCR, and VTCR	Voltage decay relays ACR, BCR, CCR, and VTCR have not dropped out	Measure voltage on load side of 2IC for low voltage (below 70V AC).	Wait until voltage decays to safe level for relay drop out.
			Relays may have welded, preventing drop out.	Replace Control Module and return for repairs (see Field Repairs on page 4-3, Chapter 6 — Replacement Procedures, and Appendix E— Replacement Parts).
	3SR safety relay	Faulty 3SR safety relay	3SR power LED, and CH1 and HC2 should be ON (see Figure 4.6)	Replace Control Module and return for repairs (see Field Repairs on page 4-3, Chapter 6 — Replacement Procedures, and Appendix E— Replacement Parts).
	4SR safety relay	Faulty 4SR safety relay	4SR power LED and CH1 and CH2 should be ON (see Figure 4.7)	Replace Control Module and return for repairs (see Field Repairs on page 4-3, Chapter 6 — Replacement Procedures, and Appendix E— Replacement Parts).
	5SR safety relay	Faulty 5SR safety relay	5SR power LED should be ON and Ch1 and CH2 should be OFF (see Figure 4.8)	Replace Control Module and return for repairs (see Field Repairs on page 4-3, Chapter 6 — Replacement Procedures, and Appendix E— Replacement Parts).
	GC grounding contactor coil	Open connection in the coil circuitry	Check wiring at the IP3 connector plug connection point 11.	Secure wiring to the IP3 connector plug connection point 11.
		Faulty GC contactor coil	Measure resistance between connection points IP3 (11) and HP1 (2). a resistance reading of less than approx. 5 Ω would indicate a faulty contactor coil.	Replace GC contactor (see Field Repairs page 4-3, Chapter 6 – Replacement Procedures and Appendix E– Replacement Parts).
	Fuse 9FU	9FU fuse blown	Verify status of blown fuse indictor light for 9FU on the fuse holder.	• Replace 9FU with appropriate size fuse (replace only once). • Replace Control Module and return for repairs (see Field Repairs on page 4-3, Chapter 6 — Replacement Procedures, and Appendix E— Replacement Parts)

❶ If system problem persists after checking the items outlined in this table, see Operational Troubleshooting of the ElectroGuard® Power Panel (110…1200 A) on page 4-40.

Table 4.7B (110…1200 A)
Was a Remote Lockout Station Switch Being Operated? (Yes – to OFF) ❶ (Continued)

Problem	Component	Possible Cause	Check	Action
Grounding contactor GC will not pick up (RLS switched to OFF)	Mechanical interlock	Loose or broken interlock	Visually check interlock for physical damage.	Replace mechanical interlock (see Field Repairs on page 4-3, Chapter 6 — Replacement Procedures, and Appendix E— Replacement Parts).
	5CR, 6CR, 7CR, or 8CR	Relay 5CR, 6CR, 7CR, or 8CR did not energize	Contactors 1IC and 2IC did not drop out due to welded contact.	Replace 1IC or 2IC (see Field Repairs on page 4-3, Chapter 6 — Replacement Procedures, and Appendix E— Replacement Parts).
			Relay VTCR did not drop out. Relay may have a welded contact that is preventing drop out.	Replace Control Module and return for repairs (see Field Repairs on page 4-3, Chapter 6 — Replacement Procedures, and Appendix E— Replacement Parts).
			5CR, 6CR, 7CR or 8CR control circuit wiring defective.	Replace Control Module and return for repairs (see Field Repairs on page 4-3, Chapter 6 — Replacement Procedures, and Appendix E— Replacement Parts).
			5CR, 6CR, 7CR, or 8CR coil open, or defective hold-in contact.	Replace Control Module and return for repairs (see Field Repairs on page 4-3, Chapter 6 — Replacement Procedures, and Appendix E— Replacement Parts).
	3CR	Relay 3CR will not drop out	Relay may have a welded contact which is preventing drop out	Replace Control Module and return for repairs (see Field Repairs on page 4-3, Chapter 6 — Replacement Procedures, and Appendix E— Replacement Parts).
	11CR or 12 CR	Relay 11CR or 12CR did not energize	DCCR, 5CR, 6CR, 7CR, 8CR, or GCICR contact did not close. Faulty 5TR timer.	Replace Control Module and return for repairs (see Field Repairs on page 4-3, Chapter 6 — Replacement Procedures, and Appendix E— Replacement Parts).
		11CR or 12CR contacts did not close	11CR or 12CR coil open	
			11CR or 12CR contact not closing due to weld.	

❶ If system problem persists after checking the items outlined in this table, see Operational Troubleshooting of the ElectroGuard® Power Panel (110I…1200 A) on page 4-40.

Table 4.9 A (23…85 A)
Expansion Module: Was a Remote Lockout Station Switch Being Operated? (Yes – to OFF) ❶

Problem	Component	Possible Cause	Check	Action
Isolation contactors 1IC and 2IC will not de-energize when all RLSs are turned to the OFF position ❶	Safety relay SR output will not de-energize (time delay option)	Time delay safety relay has not timed out	Check that green LEDs CHT1 and CHT2 are blinking, indicating time delay in process.	Wait for time delay.
Control stop signal not opening with all other circuitry checking OK and components functioning normally❶	Jumper on IP4(3) through IP4(10) when Expansion Modules connected	Jumper installed	Check whether jumpers are present.	Remove appropriate jumpers.

❶ If system problem persists after checking the items outlined in this table, see Operational Troubleshooting of the ElectroGuard® Power Panel (23…85 A) on page 4-33.

Table 4.8B (110…1200 A)
Was a Remote Lockout Station Switch Being Operated? (Yes – to OFF) ❶

Problem	Component	Possible Cause	Check	Action
Isolation contactors 1IC and 2IC will not de-energize when all RLSs are turned to the OFF position	Safety relay SR output will not de-energize (time delay option)	Time delay safety relay has not timed out	Check that green LEDs CHT1 and CHT2 are blinking, indicating time delay in process. (see Figure 4.10)	Wait for time delay.
Control stop signal not opening with all other circuitry checking OK and components functioning normally	Jumper on FB1 or FB2 connector plug points 1…6, when Expansion Modules connected	Jumper installed	Check whether jumpers are present.	Remove appropriate jumpers.

❶ If system problem persists after checking the items outlined in this table, see Operational Troubleshooting of the ElectroGuard® Power Panel (110…1200 A) on page 4-40.

Table 4.10 (23…85 A) & (110…1200 A)
Pneumatic Option: Was a Remote Lockout Station Switch Being Operated? (Yes – to OFF)❶

Problem	Component	Possible Cause	Check	Action
When any RLS switch is switched to the OFF position, the Pneumatic Isolation Module goes to fault status, air pressure exhausts through the muffler and the RLS System Isolated indicator light(s) will not illuminate	AC PWR neon indicator light in Pneumatic Isolation Module is ON but module does not operate. (see Pneumatic Isolation Module Status Light Explanation Chart Figure 4.1 on page 4-12 and Table 4.4 on page 4-13).	Loose or disconnected connector plug at HP1 or HP2 on Control Module	Check that connector plugs to HP1 and HP2 are completely inserted.	Push connector plugs firmly in to the terminal blocks.
		Loose wire on connector plug(s) to HP1 or HP2 on Control Module	Check that all wires on the connector plugs to HP1 and HP2 are securely attached.	Tighten or reconnect any loose connections.
	Electrical connector plug on side of Pneumatic Isolation Module	Connector plug is loose or disconnected	Check that connector plug is connected and fully seated in bulkhead connector.	Push connector plug in completely and secure with the latches provided.
		Loose wire in connector plug	Inspect Connector Plug interior wires for loose connections.	Tighten or reconnect any loose connections.
	Pneumatic isolation module	Component failure inside of Pneumatic Isolation Module	Install temporary test jumper wires on connector plug HP1 connector points as indicated below ❷: • 5 to 6 • 7 to 8 • 9 to 10 (see Figure 4.12)	• Test operate ElectroGuard®. • If electrical isolation is achieved, replace Pneumatic Isolation Module and return for repairs (see Field Repairs on page 4-3, Chapter 6 — Replacement Procedures, and Appendix E— Replacement Parts). • If electrical isolation is not achieved, problem may be in ElectroGuard® Power Panel or wiring to the Pneumatic Isolation Module.

❶ If system problem persists after checking the items outlined in this table, see Operational Troubleshooting of the Pneumatic Isolation Module on page 4-49 or Operational Troubleshooting the ElectroGuard® Power Panel (23…85 A) on page 4-33 or (110…1200 A) on page 4-40.

❷ When finished testing, remove all temporary jumper wires and re-install unplugged Connector Plugs.

Table 4.11
Remote Lockout Station: Was a Remote Lockout Station Switch Being Operated? (Yes – to OFF) ❶

Problem	Component	Possible Cause	Check	Action
System Isolated light will not illuminate and all other components are functioning normally	RLS System Isolated indicator light	Loose or burned out LED cluster	Check LED.	Replace LED cluster (see Field Repairs on page 4-3, Chapter 6 — Replacement Procedures, and Appendix E— Replacement Parts).
		Loose wiring connections	Check for open wiring at terminal connections.	Tighten connections.
	RLS switch	Switch contact failure	With RLS switch OFF, no continuity between connection points 1 and 2, 3 and 4, 5 and 6 in the RLS switch.	Replace switch in the RLS (see Field Repairs on page 4-3, Chapter 6 — Replacement Procedures, and Appendix E— Replacement Parts).
	RLS switch auxiliary contact	Auxiliary contact failure at connection points 21 and 22 in the RLS switch	Continuity and operation of the auxiliary contact.	Replace switch in the RLS (see Field Repairs on page 4-3, Chapter 6 — Replacement Procedures, and Appendix E— Replacement Parts).

❶ If problem persists after checking the items outlined in this table, see Operational Troubleshooting of the ElectroGuard® Power Panel (23…85 A) on page 4-33 or (110…1200 A) on page 4-40.

Figure 4.2
(23…1200 A) Safety Relay 1SR When All RLS Switches Are in the ON Position

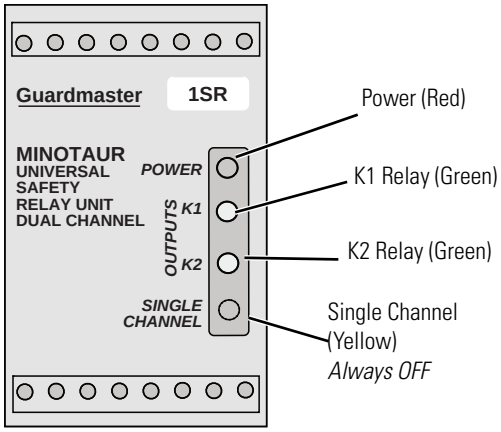

Figure 4.3
(23…1200 A) Safety Relays 2SR and (110…1200 A) 2ASR When All RLS Switches Are in the ON Position

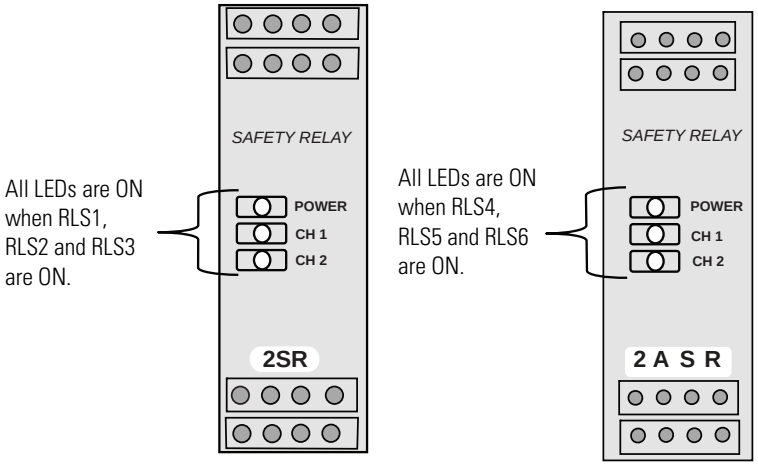

Figure 4.4
(110...1200 A) Safety Relays 3SR and 4SR When All RLS Switches Are in the ON Position

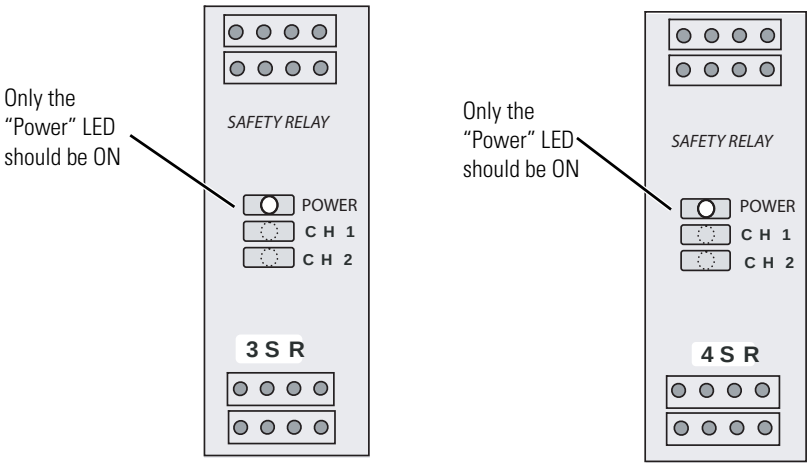

Figure 4.5
(110...1200 A) Safety Relay 5SR When All RLS Switches Are in the ON Position

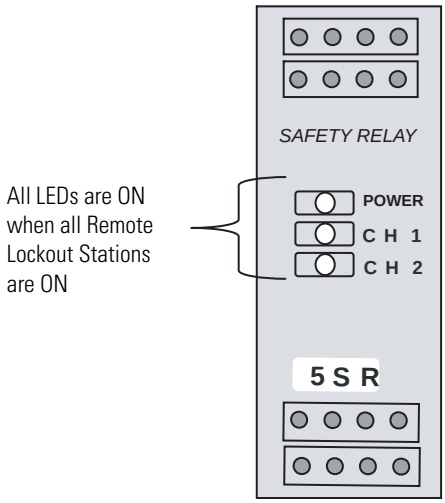

Figure 4.6
(110...1200 A) Safety Relay 3SR When Any RLS Is in the OFF Position

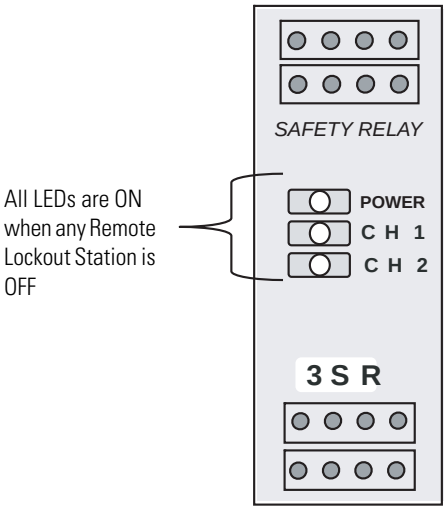

Figure 4.7
(110...1200 A) Safety Relay 4SR When Any RLS Is in the OFF Position

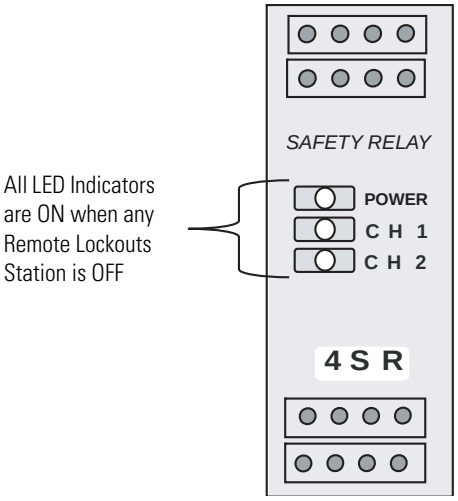

Figure 4.8
(110...1200 A) Safety Relay 5SR When Any RLS Is in the OFF Position

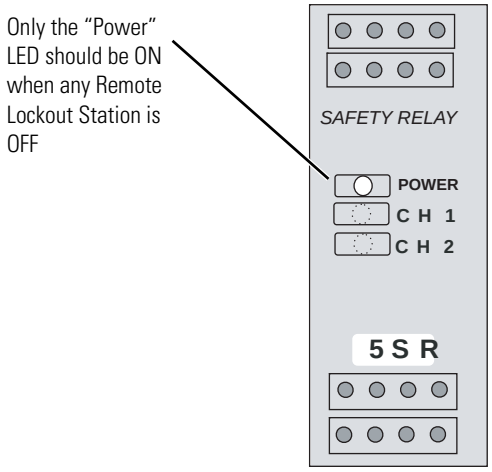

Figure 4.9
Safety Relay SR in Expansion Module without Time Delay

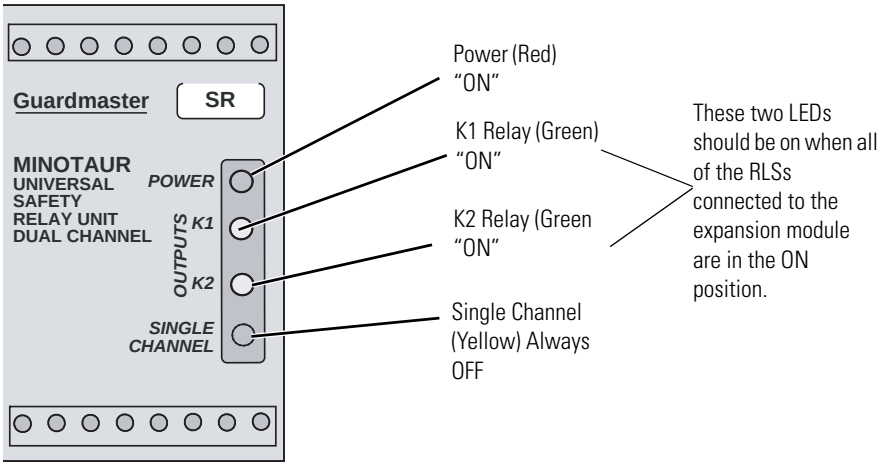

Figure 4.10
Safety Relay SR in Expansion Module with Time Delay

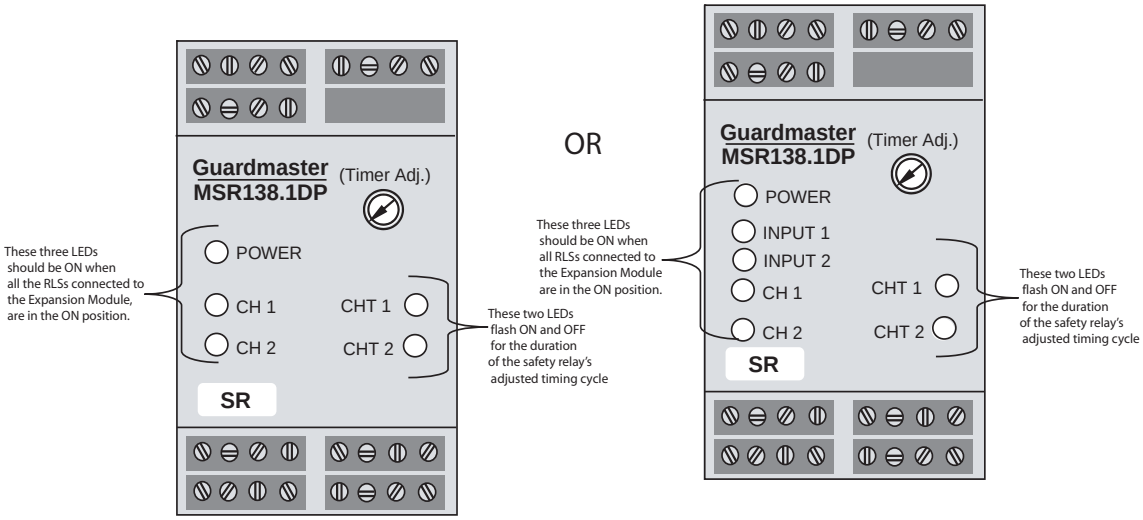

Figure 4.11
Remote Lockout Station Connector Plug with Jumpers Installed

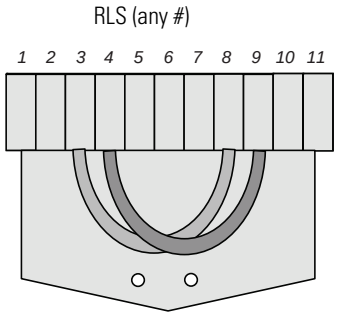

Figure 4.12
HP1 Connector Plug with Jumpers Installed

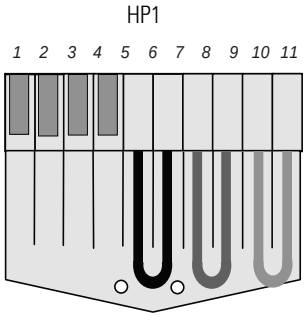

Figure 4.13
Contactors 1IC, 2IC, and GC

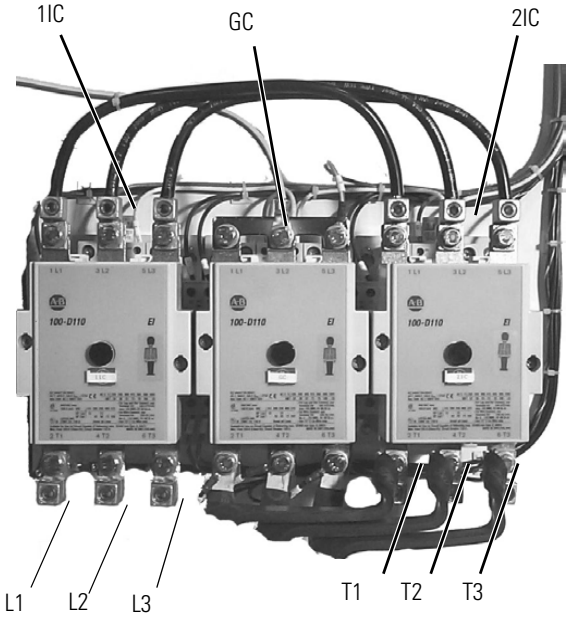

Operational Troubleshooting of the ElectroGuard® Power Panel (23…85 A)

Operational Troubleshooting of the ElectroGuard® Power Panel with all Remote Lockout Stations in the ON position

ATTENTION

Severe injury, death, property damage, or economic loss could occur if the system is not recommissioned after repair. Refer to Chapter 3, *Commissioning of the ElectroGuard® Safety Isolation System*, of this manual for proper commissioning.

ATTENTION

ElectroGuard® system modules are factory sealed with a tamper-indicating seal. Altering, defeating, or bypassing any module or component of the Safety Isolation System may result in personal injury, death, property damage, or economic loss. Only qualified service technicians must perform service or maintenance. Resealing of the modules is the responsibility of the person or organization performing the service or maintenance.

ATTENTION

Only qualified service technicians familiar with the ElectroGuard® and associated machinery should plan or implement the installation, commissioning, and subsequent maintenance of the system. Failure to do this may result in personal injury and/or equipment damage.

If the input line voltage is present, the following should occur:

1. The two neon voltage indicator terminal blocks labeled 1 and 2 will light when 120V AC control voltage is present from the secondary of the control transformer. The fan will be running.

   If the two neon voltage indicators, terminal blocks 1 and 2 are not illuminated:

   - The control transformer circuit may have a blown fuse (5FU, 6FU, 7FU).
   - The voltage feeding the transformer primary may be turned OFF.
   - There may be a loose connection in the transformer wiring.
   - The neon voltage indicator terminal block may be defective.

2. With all connected RLS switches in the ON position, pushing the System ON push button starts the control system logic cycle. Safety Relay 1SR is energized. If all of the 1SR input contact requirements are satisfied, the red LED (Power) and two green output LEDs (K1 and K2) will illuminate. (see Figure 4.14).

Figure 4.14
Safety Relay 1SR

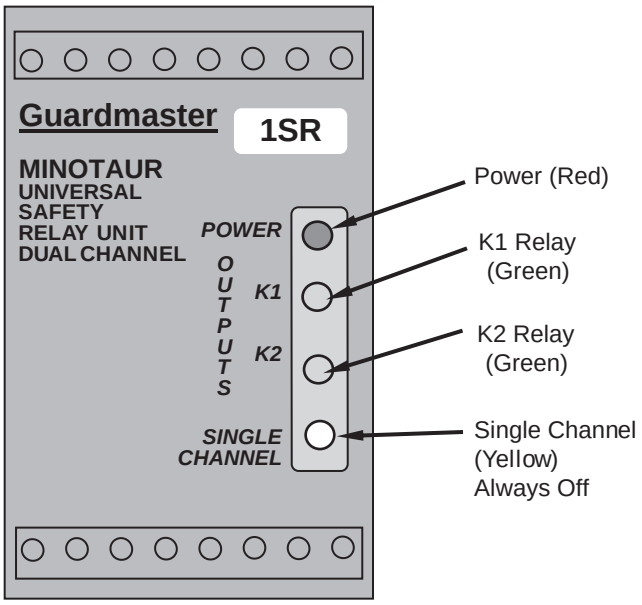

3. When 1SR is energized the isolated ground monitoring Relays 1GCR and 2GCR will energize and illuminate the door-mounted System Ground Connected pilot light, and apply 120V AC to solid-state timer 1TR (mounted on Relay DCCR) and the 24V DC power supply.

   Any one of the following will prevent Relays 1GCR and 2GCR from energizing:

   - Fuse 4FU is blown.
   - The isolated ground conductor is disconnected.
   - The connector plug labeled HV has a loose connection at connection point HV(1).

   If none of the above conditions are present to prevent Relays 1GCR and 2GCR from energizing, the control logic cycle proceeds.

4. The 24V DC power supply LED power indicator light should illuminate.

5. After the 1TR time delay of 1.5 seconds, 1TR energizes Relay DCCR, which then allows 24V DC to be available to the RLS circuits and Safety Relay 2SR.

6. With the 24V DC applied and all connected RLS switches in the ON position, the LED terminal blocks 100, 103, and 142…151 will be illuminated (see Figure 4.15).

Figure 4.15
23…85 A ElectroGuard® Indicating Light

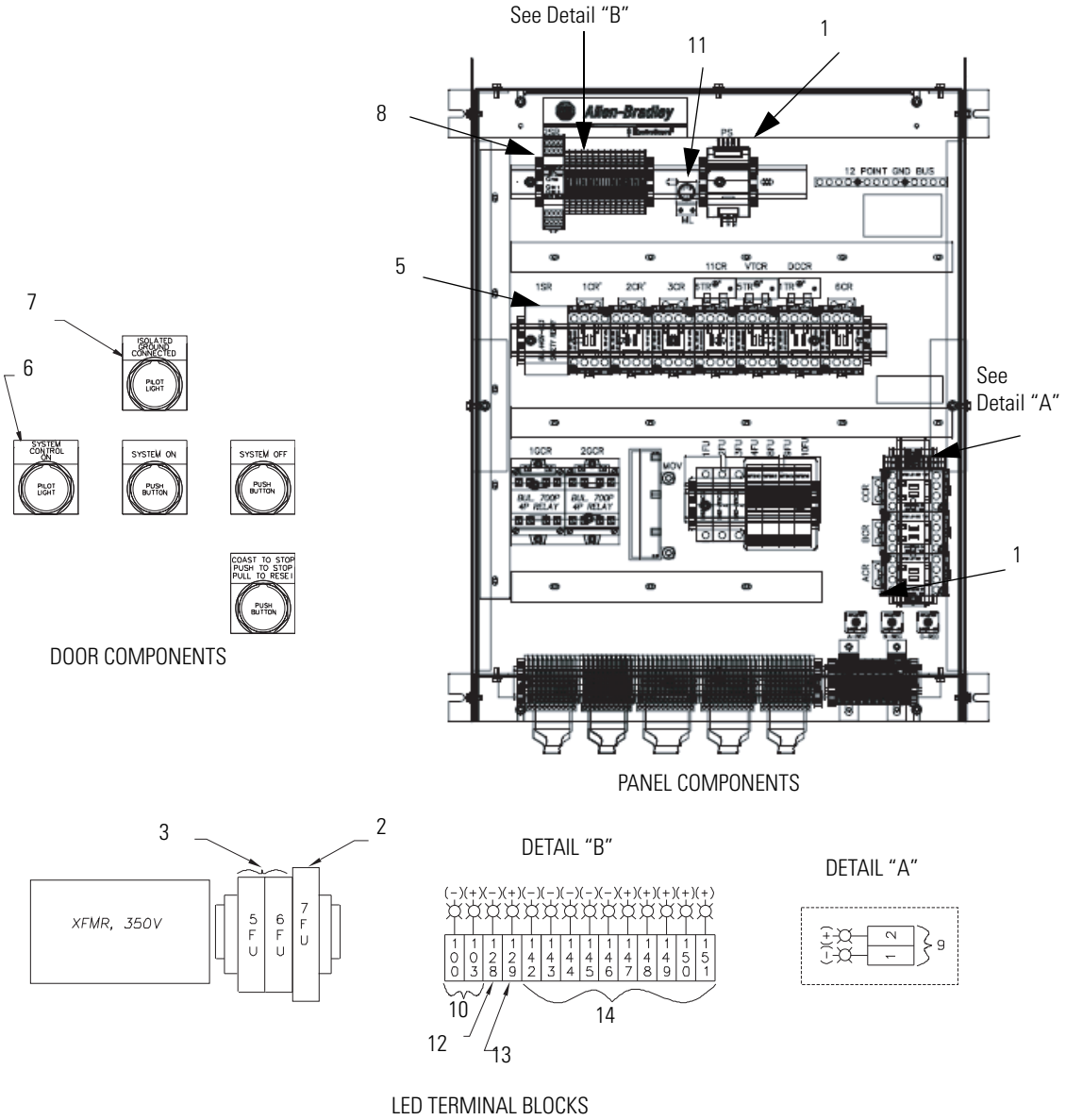

Figure 4.17
23…85 A ElectroGuard® Indicating Lights (Continued)

Item	Description	Indicator	Explanation
1	Power Supply (24V DC)	LED	ON when 120V is applied indicating DC available.
2	Control Transformer Sec. Fuse — 7FU	LED	ON when fuse is blown. *Probable cause:* Circuit fault or overload. Primary to secondary of control transformer is shorted.
3	Control Transformer Primary Fuses 5FU and 6FU	LED	ON when fuse is blown. *Probable cause:* Transformer shorted winding.
4	Ground Sensing Relay(s) Fuse — 4FU	LED	ON when fuse is blown. *Probable cause:* 1GCR or 2GCR coil burned out and shorted across A1 and A2.
5	Safety Monitoring Relay 1SR	LED	Power LED is ON when 120V is applied across A1 and A2. SYSTEM ON has been pressed. K1 ON when internal relay K1 is energized. K2 ON when internal relay K2 is energized. K1 and K2 are energized when SYSTEM ON is pressed supplying power to terminals A1 and A2, the inputs across terminals X1 and X2 are closed, DIP switch R/T in DOWN (T/Auto) position, DIP switch S/D in UP (D/Dual Channel), and the GIS coast-to-stop contacts across S13, S14, S23, and S24 are closed. Single channel is OFF when S/D switch is in the (D) dual channel position.
6	System Control On Door Device	Pilot Light	ON when SYSTEM ON push button has been pushed. If 1SR, 1MCR, and 2MCR have picked up and pilot light is OFF, bulb may be burnt out. Push-to-test to determine bulb failure.
7	Isolated Ground Connected Door Device	Pilot Light	ON when 1GCR and 2GCR relays are energized because the ground conductor is connected. *Probable cause:* If 1GCR and/or 2GCR have picked up and pilot light is OFF, the bulb may be burnt out. Push-to-test to determine bulb failure.
8	Safety Monitoring Relay 2SR	LED	Power is ON when 24V DC is applied across A1 and A 2. For 2SR: CH1 ON when internal relay K1 is energized (circuit S10 to S11 is closed because all RLS are in the ON position). CH2 ON when internal relay K2 is energized (circuit S21 to S22 is closed because all RLS are in the ON Position). CH1 and CH2 are ON when 24V DC power is supplied to terminals A1 and A2, circuit across S10 and S33 is complete and inputs across terminals S10, S11, S21, and S22 are closed. If inputs across S21 andS22 failed to close, K2 will not energize and CH2 LED will be OFF. If inputs across S10 and S11 fail to close, K1 will not energize and CH1 LED will be OFF. The safety outputs (13), (14), and (23), (24) will not close. The auxiliary output for the coil (K1 or K2) that failed to energize will not close. If either of the inputs across S10, S11, or S21, S22 were to weld, either CH1 or CH2 LEDs will remain ON. The safety relay will **not** re-close its safety outputs (13), (14) and (23), (24).
9	△1 and △2 Terminal Block	Neon	ON when 120V AC is ON. △1 is ON when 120V to GND present. △2 is ON when GND to 120V present.
10	Terminal Block △100 and △103	LED	24V DC is ON, 9FU is not blown and relay door is energized.
11	ML Pilot Light	PL	ON when any RLS is OFF and system contacts are closed to energize "System Isolated" light on the RLS.
12	△128 Terminal Block	LED	ON when the circuit to the power supply plus is complete, 10FU is not blown, safety relay 1PSSR output is closed (Terminal 13 and 14) and one RLS station is OFF.
13	△129 Terminal Block	LED	ON
14	△142 — △151 Terminal Block	LED	On when 2SR is energized and RLS1, RLS2, RLS3, and RLS4 are ON. When RLS1 is OFF: 142 and 148…151 are ON and 143…147 are OFF. When RLS2 is OFF: 142, 143, and 149…151 are ON and 144…148 are OFF. When RLS3 is OFF: 142…144, 150, and 151 are ON and 145…149 are OFF. When RLS4 is OFF: 142…145 and 151 are ON and 146…150 are OFF.
15	1FU, 2FU, 3FU	LED	ON when fuse is blown and the RLS switches are in the ON position. *Probable cause:* Shorted or defective ACR, BCR, or CCR coil.
16	8FU	LED	ON when fuse is blown and the SIS system is ON and will only be lit dimly if any RLS switch is OFF. *Probable cause:* 1CR, 2CR, 3CR, 6CR, 11CR, DCCR, VTCR, 1IC, 2IC, or GC coil burnt out or shorted across A1, A2.
17	9FU	LED	ON when fuse is blown and the SIS system is ON, the system will fault out. *Probable cause:* Short on DC side of power supply. 24V DC is not available to rung #68.
18	10FU	LED	ON when fuse is blown and the SIS system is ON. The system will not fault out. The RLS indicator will not light if turned to the OFF position. *Probable cause:* Shorted RLS or wiring.

△ = Number of LED label on terminal block.

7. If all connected RLS switches are in the ON position, all three green LED indicator lights on Safety Relay 2SR will illuminate (see Figure 4.13 and Figure 4.4).

8. When the safety output contacts of Safety Relays 1SR and 2SR are closed, they allow power contactors 1IC and 2IC to energize (see Figure 4.15).

Safety Isolation System (Time Delay Option)

When the safety output contacts of Safety Relays 1SR and 2SR are closed, they allow control Relays 1CR' and 2CR' to energize. 1CR' and 2CR' will allow off-delay timers 2TR and 3TR mounted on contactors 1IC and 2IC to energize. Power contactors 1IC and 2IC will energize.

Safety Isolation System (Pneumatic Isolation Option)

In addition to the normal system operation described, a contact from Relay PSCR in the Pneumatic Isolation Module must close to allow the 1IC and 2IC isolation contactors to energize.

Failure of one or both isolation contactors 1IC and 2IC to energize may result from:

- An open connection to the 1IC, 2IC coil voltage.
- Safety output contacts for 1SR or 2SR not closing.
- Control Relays 6CR or 11CR not de-energizing.
- Loose 2TR or 3TR timer attachment (time delay option)
- 1CR' or 2CR' control relays not energizing (time delay option).
- An incorrect or missing input from the auxiliary contact on grounding contactor GC.
- Any one of the power contactors having a welded contact, preventing further normal system operation. The contactor must be replaced.
- The mechanical interlocks between the power contactors operating incorrectly, preventing proper contactor mechanical operation. The control contacts on the interlocks will not provide the correct logic to the circuit, preventing normal system operation.
- A faulty or open connection between the Control Module and the Pneumatic Isolation Module (Pneumatic Isolation Module option).

Operational Troubleshooting of the ElectroGuard® Power Panel with all Remote Lockout Stations in the OFF Position

When any of the connected RLSs are switched to the OFF position, power contactors 1IC and 2IC are de-energized and contactor GC is energized. After GC is energized, the System Isolated light on the RLS will illuminate.

The normal sequence of operation causing this to occur is as follows:

1. Turning an RLS OFF opens two contacts that are wired to connection points 3 and 8, and 4 and 9 on the RLS terminal block. This causes the safety output contacts of Safety Relay 2SR to open. The green Power LED on Safety Relay 2SR remains illuminated. All other LEDs on 2SR will be OFF (see Figure 4.4).

2. When the 2SR safety output contacts open, power contactors 1IC and 2IC de-energize. Control Relay 3CR will de-energize. Control Relay VTCR remains energized until the SIS loadside voltage decays to a predetermined level. This allows control relay 6CR to hold itself in and energize control relay 11CR. After the SIS loadside voltage decays to a predetermined level ACR, BCR, and CCR will de-energize. Grounding contactor GC will energize.

   Closing contacts on GC also complete the 24V DC circuit to illuminate the ML pilot light and the RLS System Isolated indicator light (see Figure 4.15 or 4.16).

Figure 4.16
ML Light in Control Module

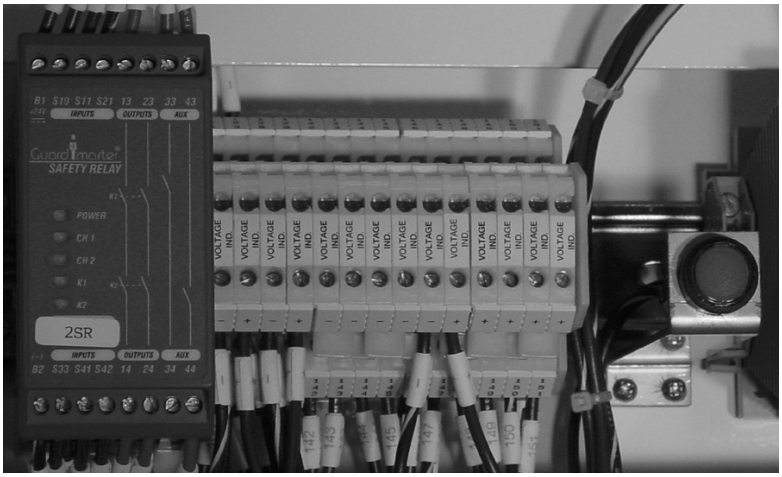

Safety Isolation System Control Module (Time Delay Option)

When the safety output contacts of Safety Relay 2SR open, control Relays 1CR' and 2CR' will de-energize. The off-delay timers 2TR and 3TR will time out after 30 seconds, allowing contactors 1IC and 2IC to de-energize. Control Relay 3CR will de-energize. Control Relay VTCR remains energized until the SIS loadside voltage decays to a predetermined level. This allows control relay 6CR to hold itself in and energize control relay 11CR. After the SIS loadside voltage decays to a predetermined level, ACR, BCR, and CCR will de-energize. Grounding contactor GC will energize.

Closing contacts on GC also completes the 24V DC circuit to illuminate the ML pilot light and the RLS System Isolated indicator light.

Safety Isolation System (Pneumatic Isolation Option)

In addition to the normal system operation described, redundant output contacts from Safety Relays 1PSSR and 2PSSR in the Pneumatic Isolation Module must close to complete the 24V DC circuit to illuminate the ML pilot light and the RLS System Isolated indicator light.

If contactor GC is energized, the ML pilot light and LEDs 128 and 129 are ON but the RLS indicator light does not illuminate, the following faults may be possible:

- The System Isolated light may need to be replaced (LED cluster).
- The circuit through the RLS switch auxiliary contact to the LED light is defective or missing. Perform a point-to-point check between terminals 21 and 22 in the switch and terminals 1 and 6 on the terminal block in the RLS.

If contactor GC does not energize, the following faults may have occurred:

- 24V DC may be OFF.
- Control Relays 6CR, 11CR, or VTCR failed to energize.
- Welded N.O. contact on Control Relays 1CR' or 2CR' (time delay option).
- Voltage Decay Relays ACR, BCR, or CCR have not de-energized.

Operational Troubleshooting of the ElectroGuard® Power Panel (110… 1200 A)

Operational Troubleshooting of the ElectroGuard® Power Panel with All Remote Lockout Stations in the ON Position

ATTENTION

Severe injury, death, property damage, or economic loss could occur if the system is not recommissioned after repair. Refer to Chapter 3, *Commissioning of the ElectroGuard® Safety Isolation System*, of this manual for proper commissioning protocol.

ATTENTION

ElectroGuard® system modules are factory sealed with a tamper-indicating seal. Altering, defeating, or bypassing any module or component of the Safety Isolation System may result in personal injury, death, property damage, or economic loss. Only qualified service technicians must perform service or maintenance. Resealing of the modules is the responsibility of the person or organization performing the service or maintenance.

ATTENTION

Only qualified service technicians familiar with the ElectroGuard® and associated machinery should plan or implement the installation, commissioning, and subsequent maintenance of the system. Failure to do this may result in personal injury and/or equipment damage.

If the input line voltage is present, the following should occur:

1. The two neon voltage indicator terminal blocks labeled 1 and 2 will light when the 120V AC control voltage is present from the secondary of the control transformer. The enclosure cooling fan will be running.

   If the two neon voltage indicators, terminal blocks 1 and 2 are not illuminated:

   - The control transformer circuit may have a blown fuse (4FU, 21FU, 22FU).
   - The voltage feeding the transformer primary may be turned OFF.
   - There may be a loose connection in the transformer wiring.
   - The neon voltage indicator terminal block may be defective.

2. With all the connected RLS switches in the ON position, pushing the System ON push button (neon voltage indicator 1B will light) starts the control system logic cycle. Safety Relay 1SR is energized. If all of the 1SR input contact requirements are satisfied, the red LED (Power) and two green output LEDs (K1 and K2) will illuminate (see Figure 4.17).

Figure 4.17
Safety Relay 1SR

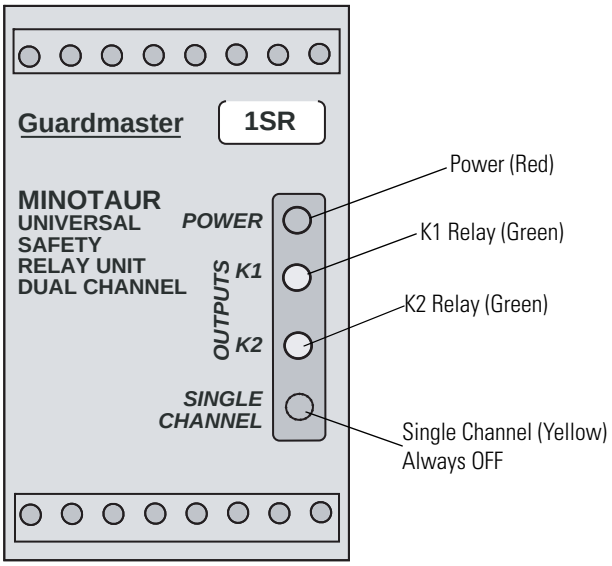

3. When 1SR is energized it will energize Master Control Relays 1MCR and 2MCR which enables the isolated ground monitoring relays 1GCR and 2GCR to energize and illuminate the door-mounted System Ground Connected pilot light and apply 120V AC to solid-state timer 1TR (mounted on Relay DCCR) and the 24V DC power supply.

   Any one of the following will prevent Relays 1GCR and 2GCR from energizing:

   - Fuse 5FU is blown
   - The isolated ground conductor is disconnected
   - The connector plug labeled HV has a loose connection at connection point HV(1)
   - Safety relay 1SR is faulty
   - Safety relay 4CR contact input to 1SR is faulty
   - Master Control Relay 1MCR or 2MCR is faulty

   If none of the above conditions are present to prevent relays 1MCR and 2MCR from energizing, the control logic cycle proceeds.

4. The 24V DC power supply LED power indicator light should now illuminate.

5. After the 1TR time delay of 1.5 seconds, 1TR energizes relay DCCR, which then allows the 24V DC to be available to the RLS circuits and safety relays 2SR, 2ASR, 3SR, 4SR, and 5SR.

6. With the 24V DC applied and all connected RLS switches in the ON position, the LED terminal blocks 100, 103, and 141 … 178 will be illuminated (see Figure 4.18, Figure 4.19, and Table 4.12).

Figure 4.18
Control Module LED Terminal Blocks

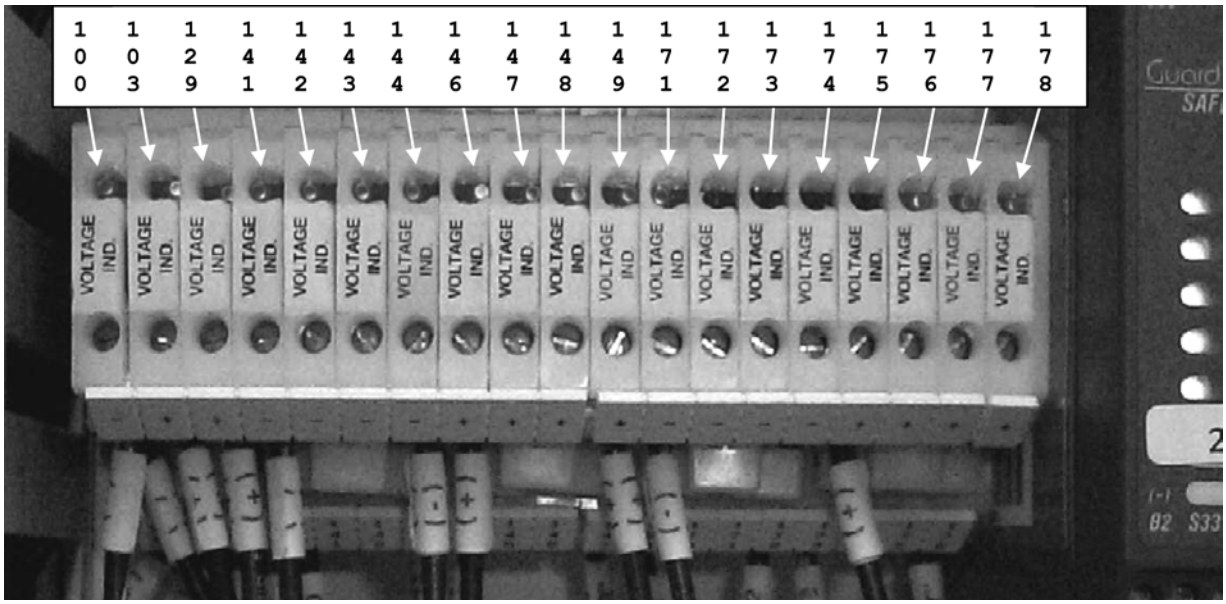

Figure 4.19
110…1200 A Control Module

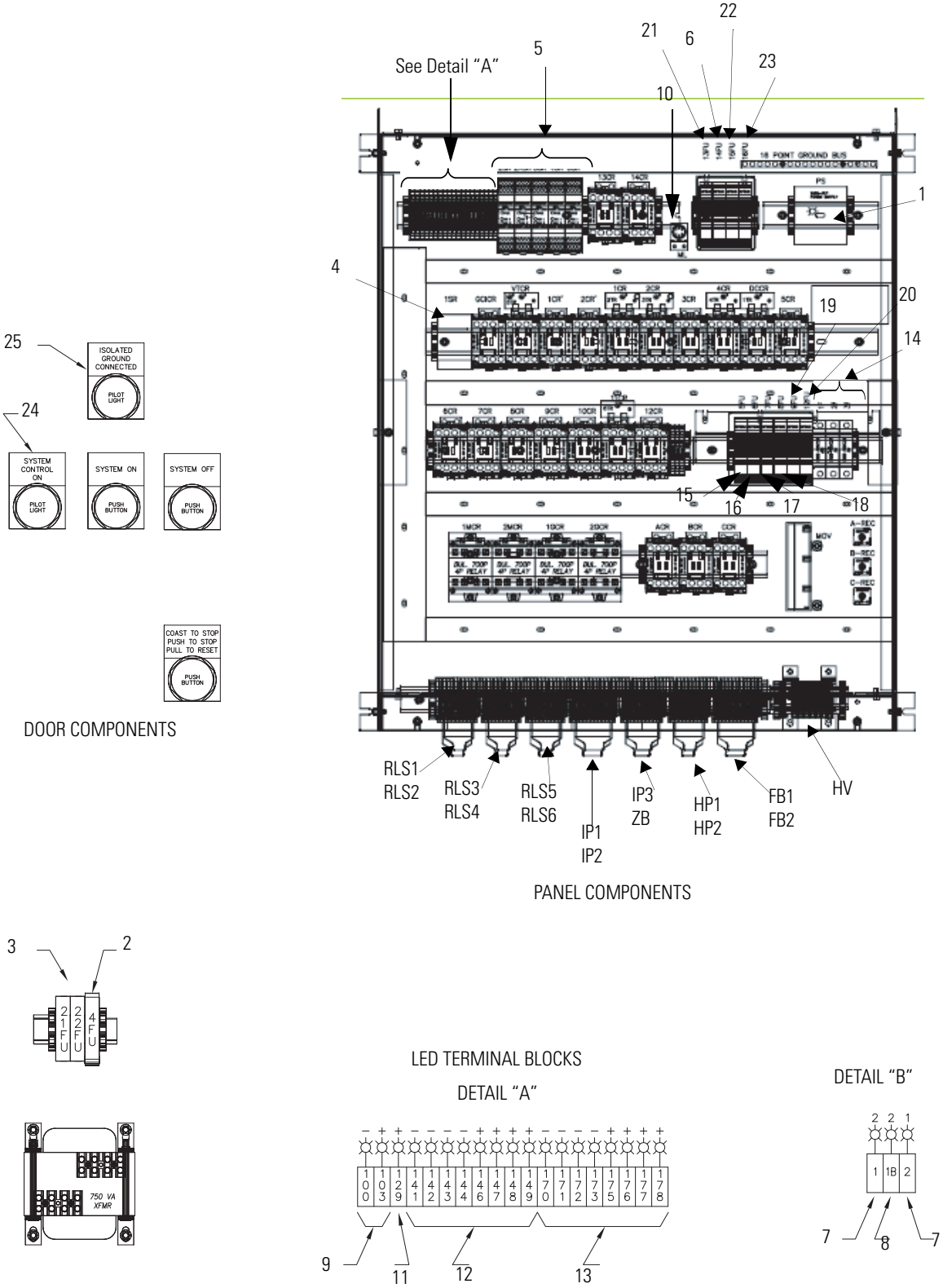

Table 4.12 Indicator Light Explanation for 110…1200 A Control Module (△ Number of LED Label on Terminal Block)

Item	Description	Indicator	Explanation
1	Power Supply (24V DC)	LED	ON when 120V is applied and DC available.
2	Control Transformer Sec. Fuse – 4FU	NEON	ON when fuse is blown; located in power panel enclosure assembly.
3	Control Transformer 21FU and 22FU	NEON	ON when fuse is blown; located in power panel enclosure assembly.
4	Safety Monitoring Relay 1SR	LED	Power LED is ON when 120V is applied across A1 and A2. SYSTEM ON has been pressed. K1 ON when internal relay K1 is energized. K2 ON when internal relay K2 is energized. K1 and K2 are energized when SYSTEM ON is pressed supplying power to terminals A1 and A2, the inputs across terminals X1 and X2 are closed, DIP switch R/T in down (T/Auto) position DIP switch S/D in up (D/Dual Channel), and the SIS coast-to-stop contacts across S13, S14, S23, and S24 are closed. Single channel is OFF when S/D switch is in the (D) dual channel position.
5	Safety Monitoring Relays 2SR, 2ASR, 3SR, 4SR, 5SR	LED	Power is ON when 24V DC is applied across A1and A2. For 2SR and 2ASR: CH1 ON when circuit S10 to S11 is closed because all RLS are in the ON position. CH2 ON when circuit S21 to S22 is closed because all RLS are in the ON position. For 3SR, 4SR, and 5SR: CH1 ON when circuit S10 to S11 is closed when 1IC, 2IC or GC right-hand (RH) mirror contact is closed. CH2 ON when circuit S21 to S22 is closed when 1IC, 2IC, or GC left-hand (LH) mirror contact is closed. This is normal operation when 1IC, 2IC, or GC are de-energized: CH1 ON when internal relay K1 is energized. CH2 ON when internal relay K2 is energized. CH1 and CH2 are ON when 24V DC power is supplied to terminals A1 and A2, circuit across S10 and S33 is complete and inputs across terminals S10, S11, S21, and S22 are closed. If inputs across S21 and S22 fail to close, K2 will not energize and CH2 LED will be OFF. If inputs across S10 and S11 fail to close, K1 will not energize and CH1 LED will be OFF. The safety outputs (13), (14) and (23), (24) will not close. The auxiliary output for the coil (K1 or K2) that failed to energize will not close. If either of the inputs across S10, S11 or S21, S22 were to weld, either K1 and CH1 LED or K2 and CH2 LEDs will remain ON. The safety relay will **not** re-close its safety outputs (13), (14) and (23), (24).
6	14FU—Fuse Block for 24V DC to 3SR, 4SR, and 5SR	LED	ON when fuse is blown. *Probable causes*: Shorted 3SR, 4SR, or 5SR.
7	△1 and △2 Terminal Block	NEON	ON when 120V AC is ON. Light △1 ON when 120V to GND present. Light △2 ON when GND to 120V present.
8	△1B Terminal Block	NEON	ON when System ON is pushed and 1SR, 1MCR, and 2MCR are ON.
9	Terminal Block △100 and △103	LED	ON when the time delay is complete and N.O. contact 1TR is closed. DCCR is on and 24V DC power is ON.
10	ML Pilot Light	PL	ON when any RLS is OFF and system contacts are closed to energize “System Isolated” light on the RLS.
11	△129 Terminal Block	LED	ON when any RLS is OFF.
12	△141 — △149 Terminal Blocks	LED	ON when 2SR is energized and RLS 1…RLS3 are ON. When RLS1 is OFF: 141 and 147…149 are ON and 142…146 are OFF.
12A	△141 — △149 Terminal Blocks	LED	When RLS2 is OFF, 141, 142, 148, and 149 are ON; 143…147 are OFF.
12B	△141 — △149 Terminal Blocks	LED	When RLS3 is OFF, 141, 142, 148, and 149 are ON; 144…148 are OFF.

Table 4.11

Indicator Light Explanation for 110…1200 A Control Module (△ Number of LED Label on Terminal Block) (Continued)

Item	Description	Indicator	Explanation
13	△170 — △178 Terminal Blocks	LED	ON when 2ASR is energized and RLS4…RLS6 are ON. When RLS4 is OFF: 170, 176, 177, and 178 are ON; 171…175 are OFF.
13A	△170 — △178 Terminal Blocks	LED	When RLS5 is OFF: 170, 171, 177, and 178 are ON; 172…176 are OFF.
13B	△170 — △178 Terminal Blocks	LED	When RLS6 is OFF; 170, 171, 172, and 178 are ON; 173…177 are OFF.
14	1FU, 2FU, 3FU	ON when fuse is blown. Probable Cause: Shorted or defective ACR, BCR or CCR coil.	
15	5FU	ON when fuse is blown. *Probable cause:* 1MCR or 2MCR coils burnt out or shorted across terminals. 1 MCR and 2MCR will drop out—shutting down the system.	
16	6FU	ON when fuse is blown. *Probable cause:* 1TR, DCCR, 1CR, 2CR, 1CR', 2CR', 2TR, 3TR, 4CR, or 4TR defective coil.	
17	7FU	ON when fuse is blown. *Probable cause:* 11CR, 12CR, 5CR, 6CR, 7CR, or 8CR defective coil.	
18	8FU	ON when fuse is blown. *Probable cause:* 9CR, 10CR, VTCR, 5TR, or GCICR defective coil.	
19	9FU	ON when fuse is blown. *Probable cause:* 1IC, 2IC, or GC has defective coil.	
20	12FU	ON when fuse is blown. *Probable cause:* Defective or shorted power supply.	
21	13FU	ON when fuse is blown. *Probable cause:* Short on DC side of power supply.	
22	15FU	ON when fuse is blown. *Probable cause:* Shorted RLS or wiring.	
23	16FU	ON when fuse is blown. *Probable cause:* Shorted 2SR or 2ASR.	

Note: When optional Expansion Modules are plugged into RLS locations on the control Module, any RLS turned OFF in that Expansion Module will generate an OFF for that RLS location on the Control Module.

Key: △ = number on terminal block for indicator light

7. If all connected RLS switches are in the ON position, all three green LED indicator lights on safety relay 2SR and 2ASR will illuminate (see Figure 4.3 and Table 4.12).

8. When the safety output contacts of safety relays 1SR, 2SR and 2ASR are closed, pilot relays 1CR and 2CR will energize and allow power contactors 1IC and 2IC to energize (see Figure 4.13).

Safety Isolation System (Time Delay Option)

When the safety output contacts of safety relays 1SR, 2SR, and 2ASR are closed, they allow control relays 1MCR and 2MCR to energize. 1MCR and 2MCR will allow control relays 1CR and 2CR to energize by applying voltage to off delay timers 2TR and 3TR mounted on 1CR and 2CR respectively. Power contactors 1IC and 2IC will energize.

Safety Isolation System (Pneumatic Isolation Option)

In addition to the normal system operation described, a contact from relay PSCR in the Pneumatic Isolation Module must close to allow the 1IC and 2IC isolation contactors to energize.

Failure of one or both isolation contactors, 1IC or 2IC to energize may result from:

- An open connection to the 1IC, 2IC coil voltage.
- Safety output contacts of 1SR, 2SR, or 2ASR not closing.
- Control relays DCCR, 3CR, 4CR, 5CR, 6CR, or GCICR not de-energizing.
- 1CR or 2CR control relays not energizing (with time delay option).
- 1MCR, 2MCR, 9CR, or 10CR not energizing.
- An incorrect or missing input from the auxiliary contact on grounding contactor GC.
- Any one of the power contactors having a welded contact, preventing further normal system operation. The power contactor must be replaced.
- The mechanical interlocks between the power contactors operating incorrectly, preventing proper contactor mechanical operation. The control contacts on interlocks will not provide the correct logic to the circuit, preventing normal system operation.
- A faulty or open connection between the Control Module and the Pneumatic Isolation Module (Pneumatic Isolation Module option).

Operational Troubleshooting of the ElectroGuard® Power Panel with all Remote Lockout Stations in the OFF Position

When any of the connected RLSs is switched to the OFF position, power contactors 1IC and 2IC are de-energized and contactor GC is energized. After GC is energized, the System Isolated light on the RLS will illuminate.

The normal sequence of operation causing this to occur is as follows:

1. Turning an RLS OFF opens two contacts that are wired to connection points 3 and 8, and 4 and 9 on the RLS terminal block. This causes the safety output contacts on safety relay 2SR (monitoring RLS1, RLS2, or RLS3) or 2ASR (monitoring RLS4, RLS5 or RLS6) to open. The green power LEDs on 2SR and 2ASR remain illuminated. All other LEDs on 2SR or 2ASR will be OFF (see Figure 4.3).

Operational Troubleshooting of the Verification Module

ATTENTION

Severe injury, death, property damage, or economic loss could occur if the system is not recommissioned after repair. Refer to Chapter 3, *Commissioning of the ElectroGuard® Safety Isolation System*, of this manual for proper commissioning.

ATTENTION

ElectroGuard® system modules are factory sealed with a tamper-indicating seal. Altering, defeating, or bypassing any module or component of the Safety Isolation System may result in personal injury, death, property damage, or economic loss. Only qualified service technicians must perform service or maintenance. Resealing of the modules is the responsibility of the person or organization performing the service or maintenance.

ATTENTION

Only qualified service technicians familiar with the ElectroGuard® and associated machinery should plan or implement the installation, commissioning, and subsequent maintenance of the system. Failure to do this may result in personal injury and/or equipment damage.

The Verification Module requires 24V DC, which is supplied by connecting the Verification Module RLS plug to the Control Module or Expansion Module RLS plug. The Power LEDs on SR1 and SR2 will be illuminated.

When one of the Remote Lockout Station switches is turned to the OFF position, the ElectroGuard® will isolate the 3-phase power and turn on the "SYSTEM ISOLATED" light. The LEDs on CR1 and CR2 will turn "On". If the jumpers are in place or a set of contacts are closed between SOFB1 position #9 & #10, and #11 & #12, the outputs of SR1 will close. The LEDs CH1 and CH2 of SR1 will illuminate. The outputs SO between position #1 & #2, or #3 & #4, will provide an output to drive the solenoid of a Gate Lock or other device.

When the inputs SOFB1 position #1 & #2, or #3 & #4, and SOFB2 position #1 & #2, or #3 & #4, are opened, the contacts of SR2 between RLS position #3 & #8, and #4 & #9, will open. The LEDs CH1 and CH2 of SR2 will go "Off".

When all of the Remote Lockout Station switches are turned to the ON position, the "SYSTEM ISOLATED" lights will be "Off". The LEDs on CR1 and CR2 will turn "Off". The LEDs CH1 and CH2 of SR1 will turn "Off" and the outputs SO between position #1 & #2, or #3 & #4, will open.

The outputs of SR1 are time opening between positions #37 & #38, and #47 & #48. This will help prevent the contacts of SR2 between RLS position #3 & #8, and #4 & #9, from opening until the set time has expired. When SR1 has timed out and the inputs SOFB1 position #1 & #2, #3 & #4, #5 & #6, and #7 & #8, and SOFB2 position #1 & #2, #3 & #4, #5 & #6, and #7 & #8, are closed, the contacts of SR2 between RLS position #3 & #8, and #4 & #9, will remain closed. The LEDs CH1 and CH2 of SR2 will be “On”.

Operational Troubleshooting of the Pneumatic Isolation Module

ATTENTION

Severe injury, death, property damage, or economic loss could occur if the system is not recommissioned after repair. Refer to Chapter 3, *Commissioning of the ElectroGuard® Safety Isolation System*, of this manual for proper commissioning.

ATTENTION

ElectroGuard® system modules are factory sealed with a tamper-indicating seal. Altering, defeating, or bypassing any module or component of the Safety Isolation System may result in personal injury, death, property damage, or economic loss. Only qualified service technicians must perform service or maintenance. Resealing of the modules is the responsibility of the person or organization performing the service or maintenance.

ATTENTION

Only qualified service technicians familiar with the ElectroGuard® and associated machinery should plan or implement the installation, commissioning, and subsequent maintenance of the system. Failure to do this may result in personal injury and/or equipment damage.

ATTENTION

Severe personal injury, death, economic loss, or equipment damage could result. Only qualified service technicians familiar with the Ross Valve and ElectroGuard® Systems should service the valve in this equipment.

The Pneumatic Isolation Module requires 120V AC control voltage supplied by connecting to the ElectroGuard® Power Panel. It also requires connection to a compressed air system (minimum 30 psi). Insufficient or no air pressure to the Pneumatic Isolation Module air inlet prevents pneumatic isolation as well as illumination of the RLS System Isolated lights.

The Pneumatic Isolation Module has one neon voltage indicator terminal block labeled AC PWR (see Figure 4.20). This light illuminates when 120V AC control voltage has been properly connected.

Figure 4.20
120V AC Power ON Neon Indicator Light

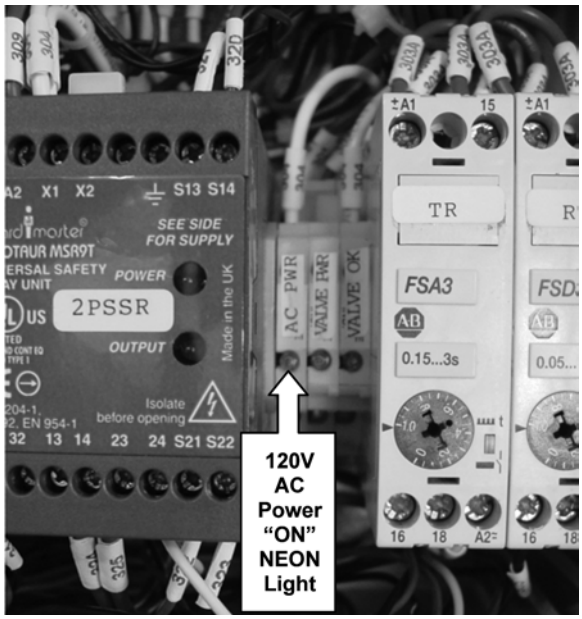

The indicator light status chart includes an added fault mode indicator light status for the pneumatic module.

The condition of the status lights can be seen through the viewing window on the front door of the Pneumatic Isolation Module.

The pneumatic module provides the Control Module with contact feedback indicating the outlet air pressure is isolated. Conversely, the Control Module provides contact inputs to enable the pneumatic isolation function. If contact status output is incorrect or there is insufficient air pressure, the pneumatic module will not function and the System Isolated lights will not be allowed to illuminate.

Relay PSCR will energize to start the pneumatic isolation process after it receives power via contacts on the Control Module relays 1CR and 2CR and there is enough outlet air pressure to trip pressure switches PS1 and PS2. A contact on relay PSCR also provides input to the main panel Control Module to make sure contactors 1IC and 2IC are de-energized (see Figure 4.21).

Figure 4.21
Safety Relay PSCR in the Pneumatic Isolation Module

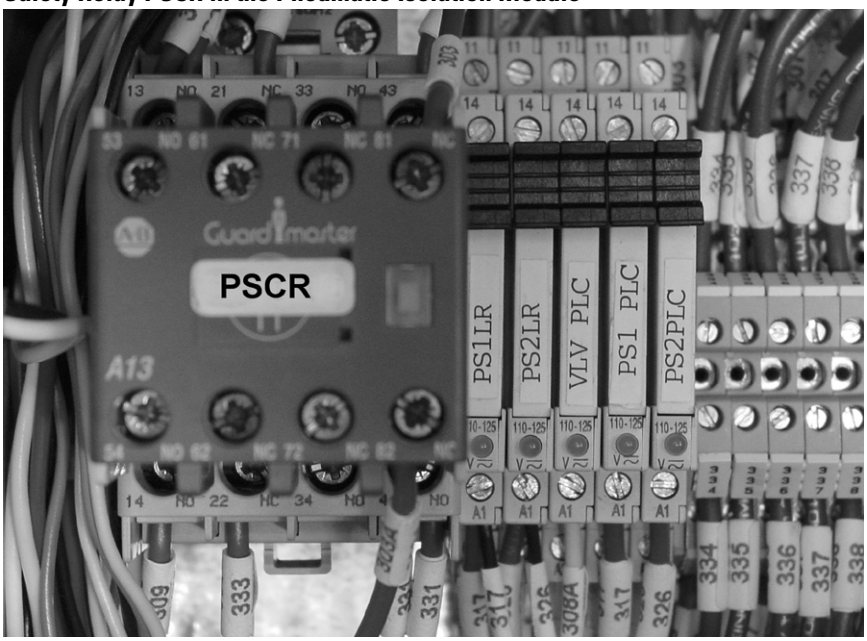

PS1 and PS2 are Allen-Bradley Bulletin 836T pressure switches that monitor the air pressure at the outlet of the pneumatic module (see Figure 4.22). They are adjusted to drop out after the safety valve has exhausted the outlet air and outlet line air pressure has decreased to 5 psi or less. The exhaust process also helps dissipate back-fed air pressure from retracting cylinders or machine pneumatic devices.

Figure 4.22
Bulletin 836T Pressure Switches in the Pneumatic Isolation Module

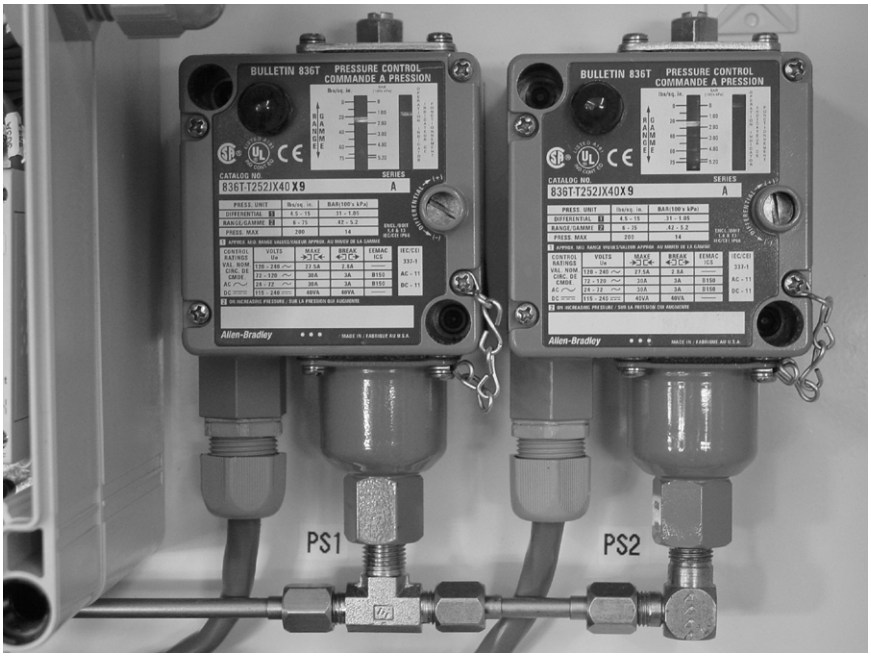

A pair of contacts on pressure switch PS1 are connected to safety relay 1PSSR and a pair of contacts on PS2 are connected to safety relay 2PSSR.

These independent safety relays monitor pressure switch status and their outputs are sent to the Control Module in the ElectroGuard® Power Panel (see Figure 4.23). If a pressure switch or safety relay fails, the control logic will not receive the necessary input from the Pneumatic Isolation Module. Outputs from both safety relays 1PSSR and 2PSSR are required to complete the Control Module circuit that illuminates the RLS System Isolated indicator lights.

Figure 4.23
Safety Relays 1PSSR and 2PSSR in the Pneumatic Isolation Module

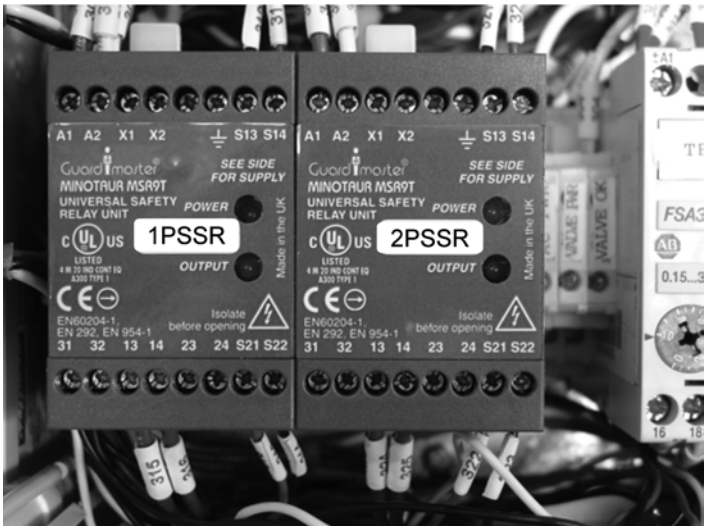

Failure of a pressure switch may be indicated when its red neon trip indicator light does not illuminate. Failure of the light to illuminate may also be due to failure of the respective pressure switch light relay, PS1LR or PS2LR. A pressure switch contact failure may prevent operation of its associated safety relay, its indicator light relay or operation of the pressure switch control relay PSCR. The fault depends on which of the DPDT contacts in the pressure switch may have failed to operate correctly.

Each pressure switch uses a contact to operate a pair of dedicated relays. The two relays respond to the operation of the pressure switch to illuminate the pressure switch pilot light and provide a status indication contact that can be used to communicate to a user's external monitoring equipment (see Figure 4.24).

Figure 4.24
PS1 and PS2 Status Indicator Relays

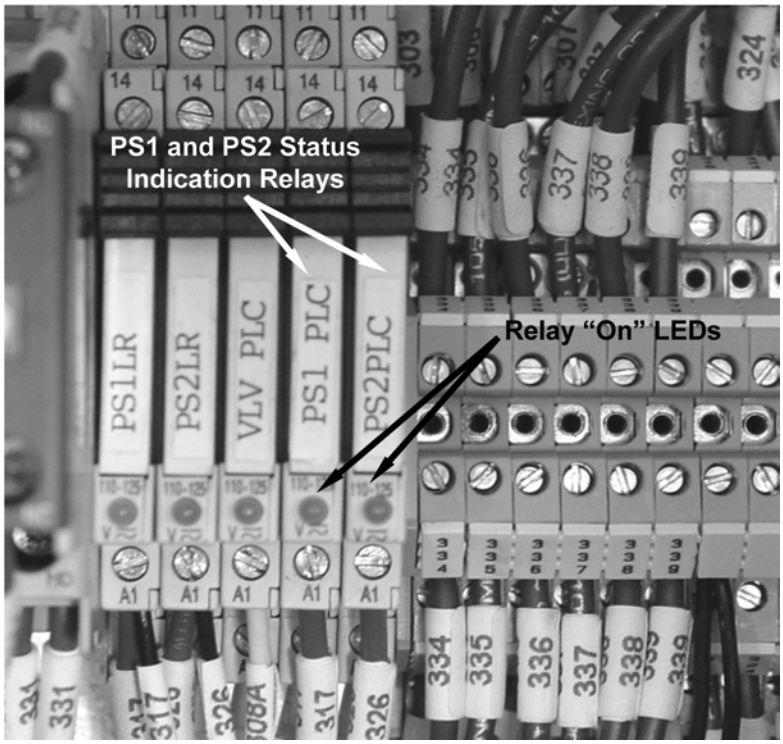

A minimum of 30 psi (2 bar) air pressure must be present at the inlet of the pneumatic module to allow the safety valve to reset and operate properly. Timer TR momentarily turns ON the safety valve reset solenoid.

After approximately 3 seconds, timer TR will energize the main valve solenoids A and B (see Figure 4.25). If the safety valve resets and does not detect an internal fault, the valve opens to allow air to flow out of the pneumatic module to the machine.

Figure 4.25
Timing Relay TR and RTR

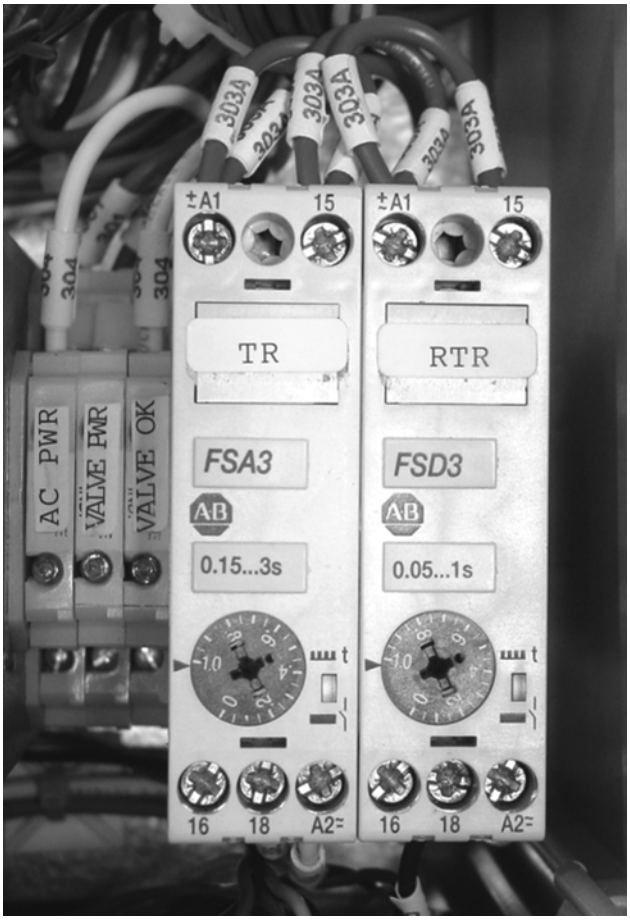

Detection of an internal fault prevents the valve from opening and passing air to the outlet. This condition makes machine pneumatics connected to the outlet inoperable until the fault is corrected. A safety valve fault pressure switch is connected to relay Valve PLC to provide indication of safety valve status.

- During normal operation, relay Valve PLC will light the neon indicator labeled Valve OK and will provide a N.C. output status contact (for PLC, etc.).
- During a safety valve fault, the valve fault pressure switch will energize relay Valve PLC, which turns off the Valve OK light and opens the N.C. output status contact (see Figures 4.26 and 4.27).

Figure 4.26
Valve Status Indicator Relay

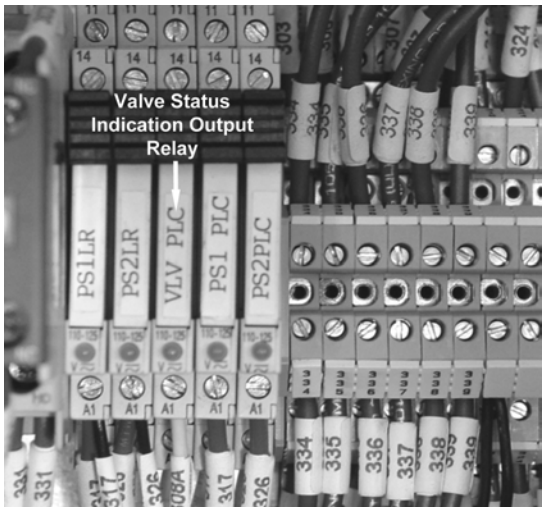

Figure 4.27
Valve Status Neon Indicator Light

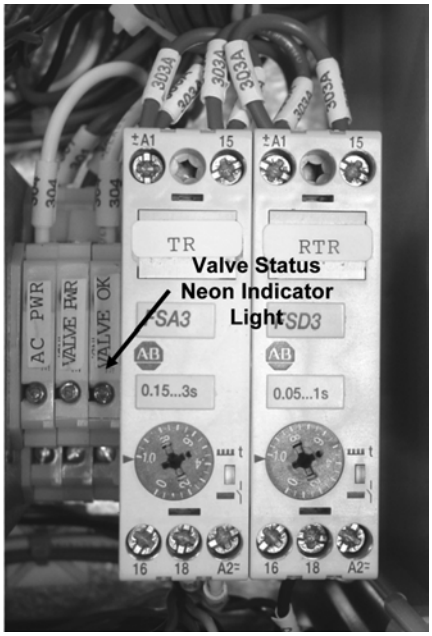

Operational Troubleshooting of the Expansion Module

Operational Troubleshooting of the Expansion Module with All Remote Lockout Stations in the ON Position

ATTENTION

Severe injury, death, property damage, or economic loss could occur if the system is not recommissioned after repair. Refer to Chapter 3, *Commissioning of the ElectroGuard® Safety Isolation System*, of this manual for proper commissioning.

ATTENTION

ElectroGuard® system modules are factory sealed with a tamper-indicating seal. Altering, defeating, or bypassing any module or component of the Safety Isolation System may result in personal injury, death, property damage, or economic loss. Only qualified service technicians must perform service or maintenance. Resealing of the modules is the responsibility of the person or organization performing the service or maintenance.

ATTENTION

Only qualified service technicians familiar with the ElectroGuard® and associated machinery should plan or implement the installation, commissioning, and subsequent maintenance of the system. Failure to do this may result in personal injury and/or equipment damage.

The initial step in isolating the Expansion Module as the source of trouble is to verify that the Control Module is working correctly.

1. Firmly grip the strain relief pad for the RLS connector plug used to interconnect the Expansion Module (see Figure 4.28) and remove the connector by pulling it away from the Control Module.

Figure 4.28
Expansion Module Connector Plug in the Control Module

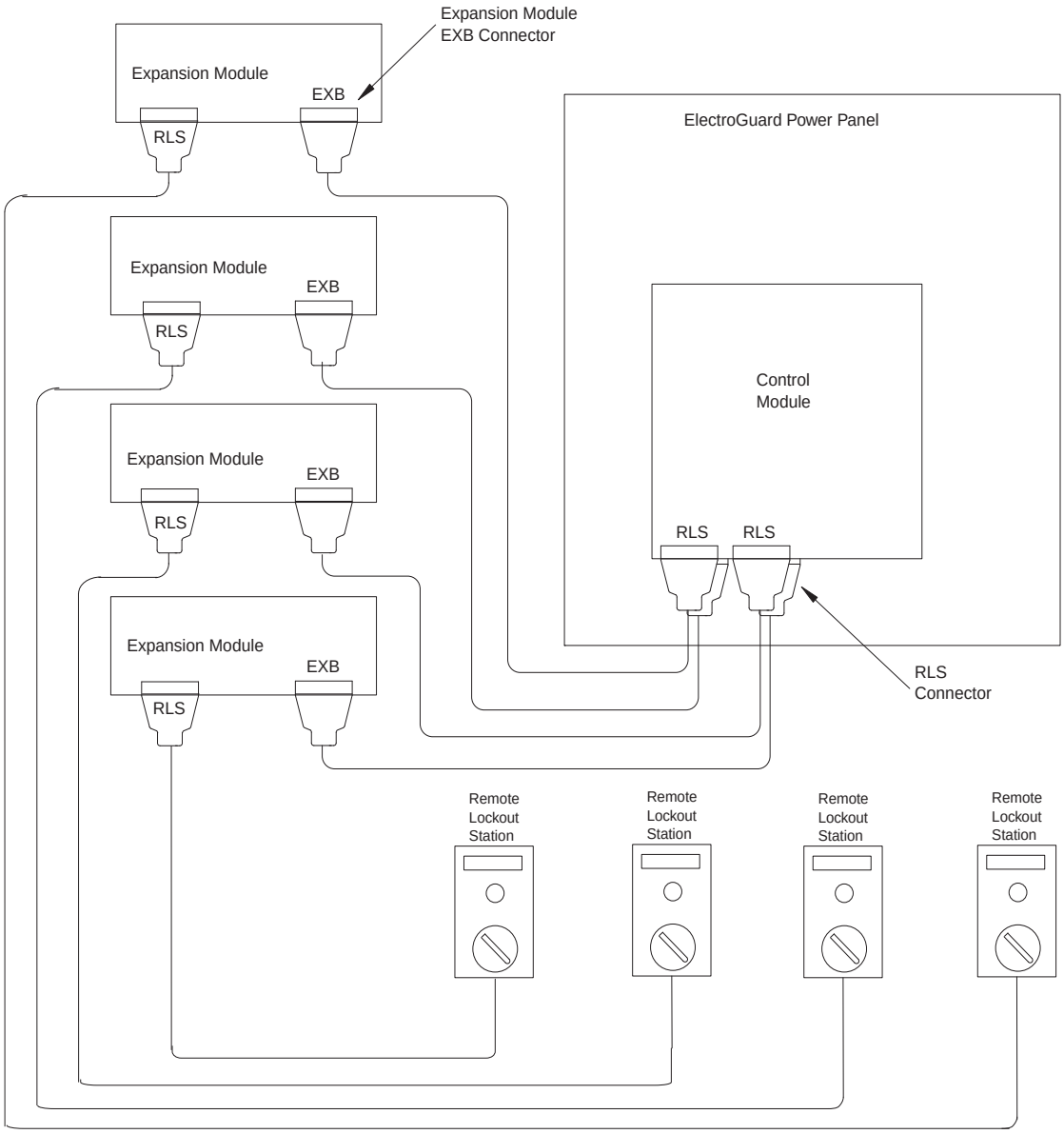

2. Insert the connector plug with jumpered out connection points into the RLS port in the Control Module (see Table 4.13 and Figure 4.29 for jumper information).

Table 4.13
Unused Remote Lockout Station Jumper

Connector	Connection Points	Recommended Wire
RLS1…RLS6	3 and 8	#16 AWG blue/1.3 mm^2 blue
	4 and 9	#16 AWG blue/1.3 mm^2 blue

Figure 4.29
Jumpering Out an Unused Remote Lockout Station Port

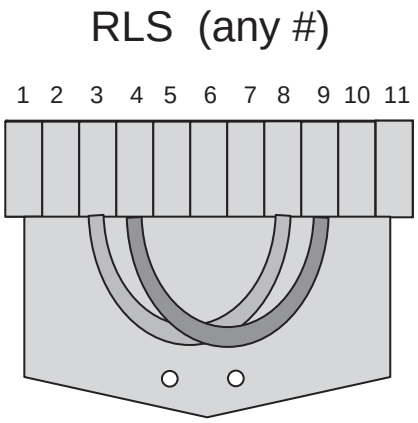

3. Verify the Control Module is operating properly with all the RLSs connected to this module.
   - If the Control Module is not operating properly, see Table 4.2, 4.3, 4.6, or 4.7.
   - If the Control Module is operating properly, remove the connector with the jumpered wires and re-insert the connector for the Expansion Module.

4. Push the System ON to start the system control logic cycle. Safety Relay SR in the Expansion Module is energized and the Red LED is on at power-up.

- For the non-time delay Expansion Module, if all of the Safety Relay SR input contact requirements are satisfied, the two green output LEDs (K1 and K2) will illuminate (see Figure 4.30).

Figure 4.30
Safety Relay SR in Expansion Module without Time Delay

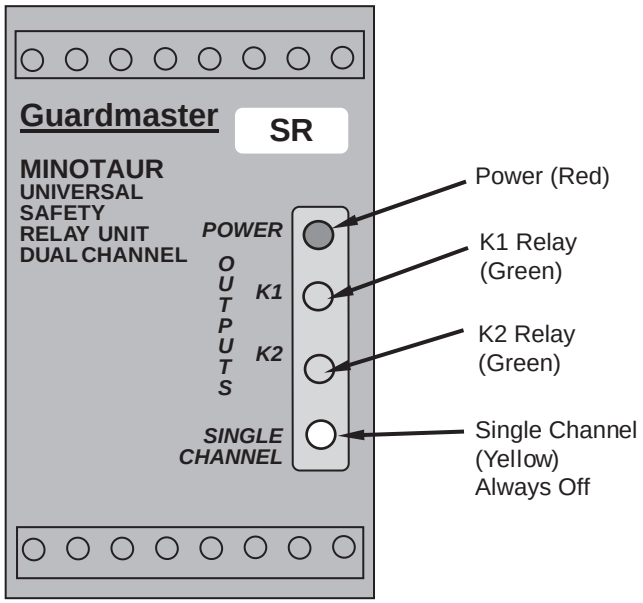

- For the time delay Expansion Module, if all of the Safety Relay SR input contact requirements are satisfied, the green LED (Power) and four green output LEDs (CH1, CH2, CHT1, and CHT2) will illuminate (see Figure 4.31).

Figure 4.31
Safety Relay SR in Expansion Module with Time Delay

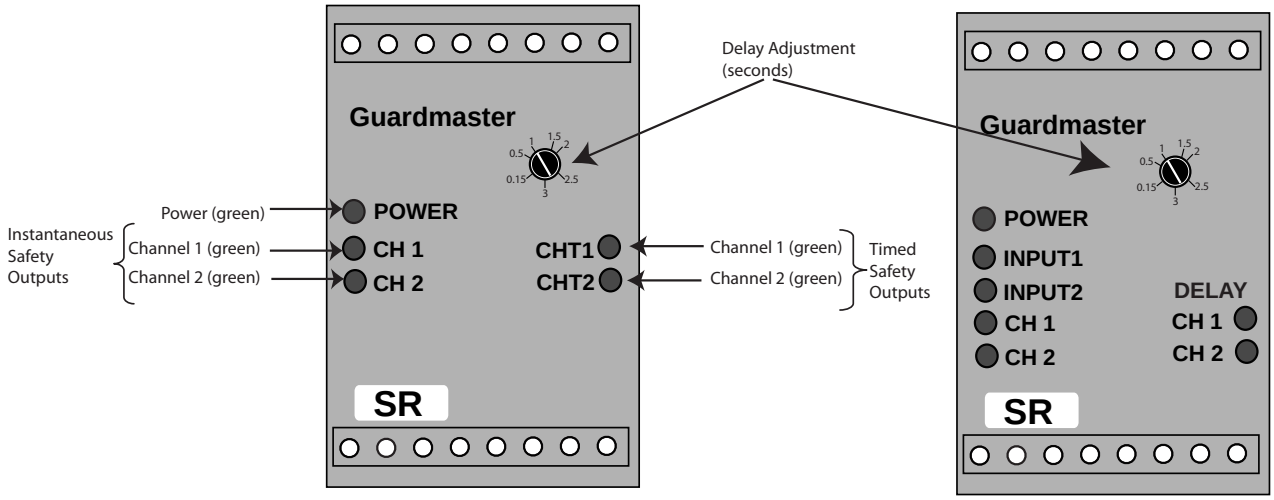

If the Safety Relay SR Power LED does not illuminate with power present at its A1 and A2 terminals, the Expansion Module needs to be replaced.

- With the 24V DC applied and all connected RLS switches in the ON position, the LED terminal blocks -, +, 41, 42, 63…88, and 91 for the 10-port Expansion Module will be illuminated (see Figure 4.32).
- With the 24V DC applied and all connected RLS switches in the ON position, the LED terminal blocks -, +, 41, 42, 63…66, 73, 74…77, 84, 85…88, and 91 for the 4-port Expansion Module will be illuminated (see Figure 4.33).

The safety output contacts from Safety Relay SR are interconnected to the input channels of safety Relay 2SR or 2ASR (110…1200 A only, RLS4…RLS6 input) in the Control Module via the EXB connector plug.

When all the RLSs connected to the Expansion Module are in the ON position, the input channels of safety Relay SR in the Expansion Module will be closed, and the safety output contacts from SR being interconnected to the input channels of safety Relay 2SR or 2ASR (110…1200 A only, RLS4…RLS6 input) will be closed.

The system control logic cycle continues (see Operational Troubleshooting of the ElectroGuard® Power Panel (23…85 A) on page 4-33 or (110…1200 A) on page 4-40). The 1IC and 2IC contactors will be energized.

Figure 4.32
10-Port Expansion Module Indicating Lights

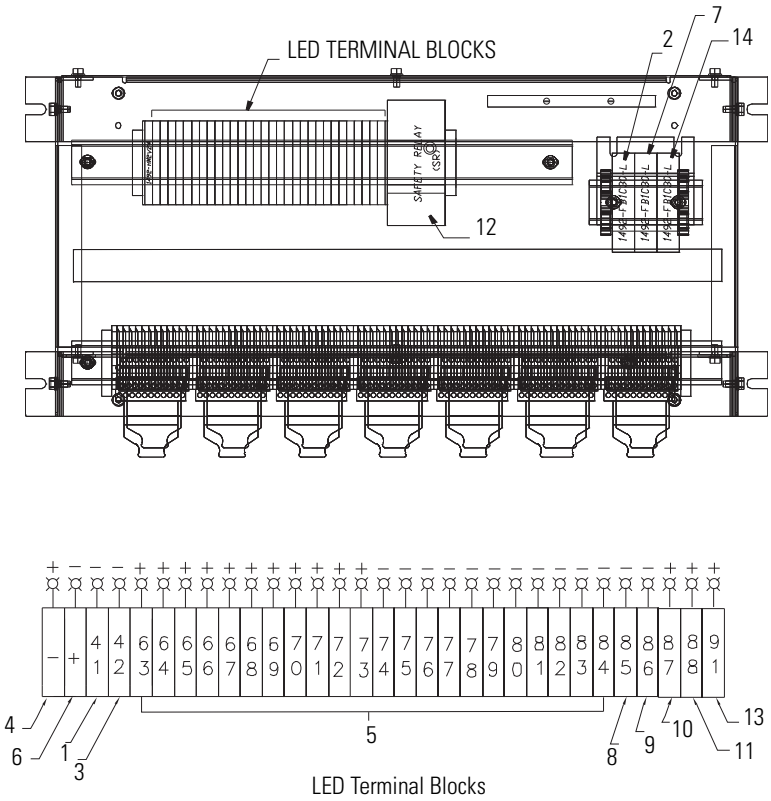

Figure 4.35
10-Port Expansion Module Indicating Lights (Continued)

Item	Description	Indicator	Explanation
1	#41 LED Terminal Block	LED	ON when 1IC, 2IC, and 3CR are OFF and GC is ON in SIS power panel.
2	1FU Fuse	Blown Fuse	ON when fuse is blown.
3	#42 LED Terminal Block	LED	ON when 1IC, 2IC, and 3CR are OFF and GC is ON in SIS power panel.
4	(–) LED Terminal Block	LED	ON when 24V DC supply (–V) applied through EXB connector.
5	#63…84 LED Terminal Block	LED	#63…73 and 74…84 terminal block ON when SR is energized and S#_A, S#_B, S#_C, S#_D, S#_E, S#_F, S#_G, S#_H, S#_I and S#_J are ON. When S#_A is OFF 64…73 and 75…84 are ON, 63 and 74 are OFF. When S#_B is OFF 65…73 and 76…84 are ON, 63…64 and 74…75 are OFF. When S#_C is OFF 66…73 and 77…84 are ON, 63…65 and 74…76 are OFF. When S#_D is OFF 67…73 and 78…84 are ON, 63…66 and 74…77 are OFF. When S#_E is OFF 68…73 and 79…84 are ON, 63…67 and 74…78 are OFF. When S#_F is OFF 69…73 and 80…84 are ON, 63…68 and 74…79 are OFF. When S#_G is OFF 70…73 and 81…84 are ON, 63…69 and 74…80 are OFF. When S#_H is OFF 71…73 and 82…84 are ON, 63…70 and 74…81 are OFF. When S#_I is OFF 72, 73, 83, and 84 are ON, 63…71 and 74…82 are OFF. When S#_J is OFF 73 and 83 are ON, 63…72 and 74…84 are OFF.
6	(+) LED Terminal Block	LED	ON when 24V DC applied through EXB connector.
7	2FU Fuse	Blown Fuse	ON when fuse is blown.
8	#85 LED Terminal Block	LED	ON when RLS switch string is closed in SIS Control Module.
9	#86 LED Terminal Block	LED	ON when RLS switch string is closed in SIS Control Module.
10	#87 LED Terminal Block	LED	ON when RLS switch string is closed in SIS Control Module.
11	#88 LED Terminal Block	LED	ON when RLS switch string is closed in SIS Control Module.
12	Safety Relay SR	Red LED	POWER ON when 24V DC is applied.
		Green LED	K1 ON when internal relay K1 is energized.
		Green LED	K2 ON when internal relay K2 is energized.
		Yellow LED	ON when internal switch is set to single channel (not used in this application).
	Safety Relay SR with time delay	Green LED	POWER ON when 24V DC is applied.
		Green LED	CH1 ON when internal relay CH1 is energized.
		Green LED	CH2 ON when internal relay CH2 is energized.
		Green LED	CHT1 ON when internal relay CHT1 is energized.
		Green LED	CHT2 ON when internal relay CHT2 is energized.
13	#91 LED Terminal Block	LED	ON when 1IC, 2IC, and 3CR are OFF and GC is ON in SIS power module.
14	3FU Fuse	Blown Fuse	ON when fuse is blown.

Figure 4.33
4-Port Expansion Module Indicating Lights

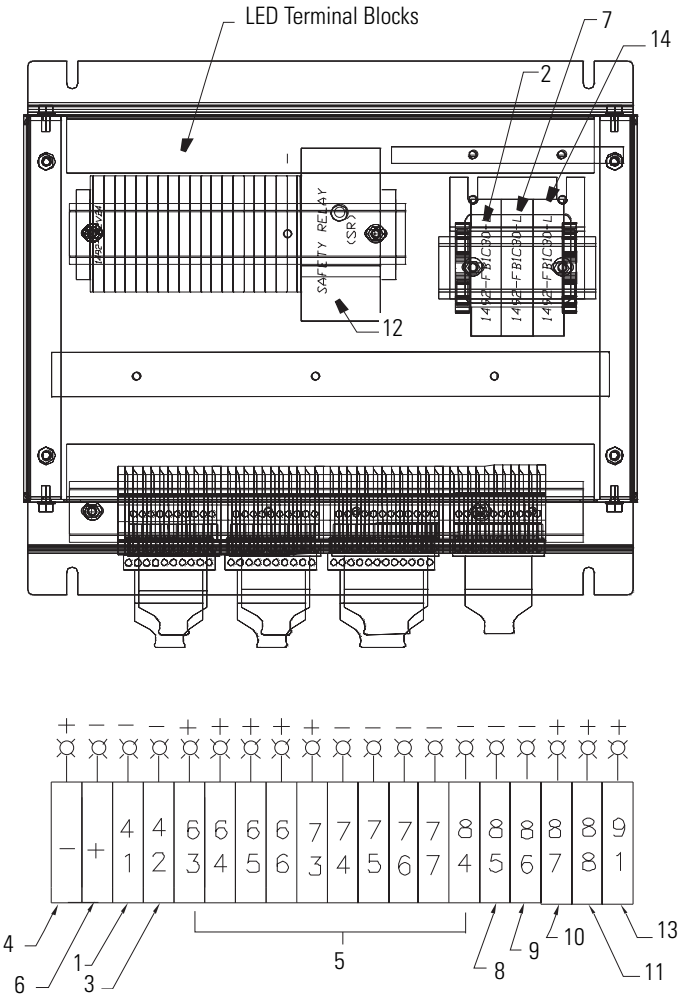

Figure 4.36
4-Port Expansion Module Indicating Lights (Continued)

Item	Description	Indicator	Explanation
1	#41 LED Terminal Block	LED	ON when 1IC, 2IC, and 3CR are OFF and GC is ON in SIS power panel.
2	1FU Fuse	Blown Fuse	ON when fuse is blown.
3	#42 LED Terminal Block	LED	ON when 1IC, 2IC, and 3CR are OFF and GC is ON in SIS power panel.
4	(–) LED Terminal Block	LED	ON when 24V DC supply (–V) applied through EXB connector.
5	#63…84 LED Terminal Block	LED	#63…73 and 74…84 LED terminal block ON when SR is energized and S#_A, S#_B, S#_C, S#_D are ON. When S#_A is OFF 64…73 and 75…84 are ON, 63 and 74 are OFF. When S#_B is OFF 65…73 and 76…84 are ON, 63…64 and 74…75 are OFF. When S#_C is OFF 66…73 and 77…84 are ON, 63…65 and 74…76 are OFF. When S#_D is OFF 73 and 84 are ON, 63…66 and 74…77 are OFF.
6	(+) LED Terminal Block	LED	ON when 24V DC applied through EXB connector
7	2FU Fuse	Blown Fuse	ON when fuse is blown.
8	#85 LED Terminal Block	LED	ON when RLS switch string is closed in SIS Control Module.
9	#86 LED Terminal Block	LED	ON when RLS switch string is closed in SIS Control Module.
10	#87 LED Terminal Block	LED	ON when RLS switch string is closed in SIS Control Module.
11	#88 LED Terminal Block	LED	ON when RLS switch string is closed in SIS Control Module.
12	Safety Relay SR	Red LED	Power ON when 24V DC is applied.
		Green LED	K1 ON when internal relay K1 is energized.
		Green LED	K2 ON when internal relay K2 is energized
		Yellow LED	ON when internal switch is set to single channel (not used in this application)
	Safety Relay SR with time delay	Green LED	Power ON when 24V DC is applied.
		Green LED	CH1 ON when internal relay CH1 is energized.
		Green LED	CH2 ON when internal relay CH2 is energized.
		Green LED	CHT1 ON when internal relay CHT1 is energized.
		Green LED	CHT2 ON when internal relay CHT2 is energized.
13	#91 LED Terminal Block	LED	ON when 1IC, 2IC, and 3CR are OFF and GC is ON in SIS power module.
14	3FU Fuse	Blown Fuse	ON when fuse is blown.

Operational Troubleshooting of Series Connected Expansion Module (with all Remote Lockout Stations in the ON Position)

A similar process is used when Expansion Modules are connected in series as previously done with an Expansion Module connected to the Control Module.

1. Firmly grip the strain relief pad for the RLS connector plug used to interconnect the Expansion Module to the series connected Expansion Module.

2. Remove the connector by pulling it away from the Expansion Module being tested (see Figure 4.34).

Figure 4.34
Series Connected Expansion Modules

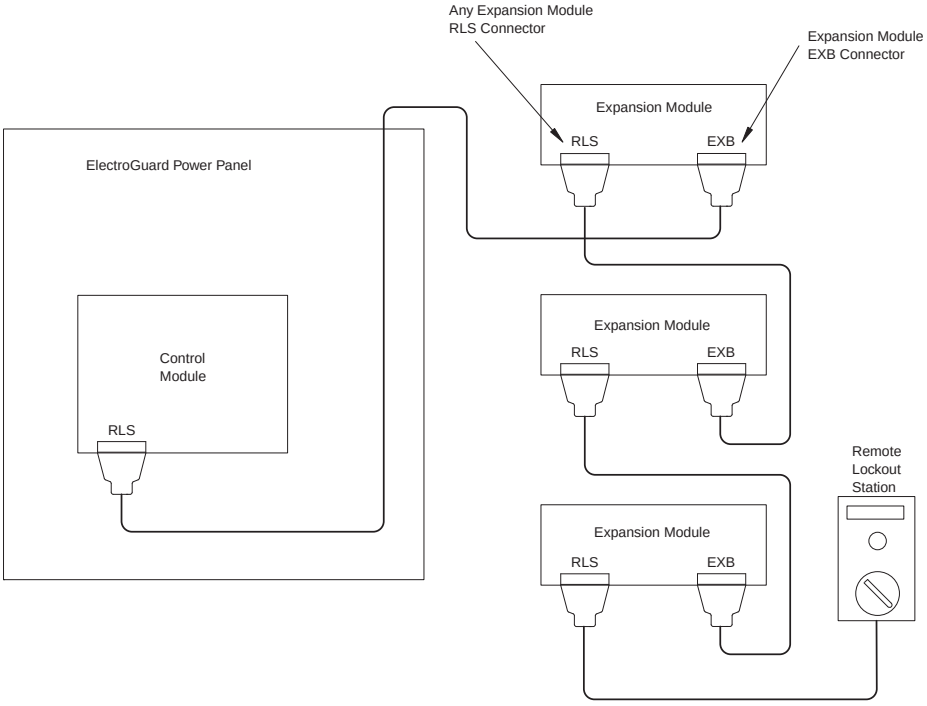

3. Insert connector plug with jumpered out connection points into the RLS port of the Expansion Module being tested.

4. Verify the tested Expansion Module is operating properly with all the RLSs connected to this module.
   - If the Expansion Module under test is not operating properly, refer to Table 4.7.
   - If the tested Expansion Module is operating properly, remove the connector with the jumpered wires and re-insert the connector in the next series connected Expansion Module.

Repeat this process until the Expansion Module that is not functioning properly has been isolated.

Operational Troubleshooting of the Expansion Module (Switching a Remote Lockout Station to the OFF Position)

When any of the RLSs connected to the Expansion Module is switched to the OFF position, power contactors 1IC and 2IC are de-energized and contactor GC energizes. After GC is energized, the System Isolated light on the RLS will illuminate.

The normal sequence of operation causing this to occur is as follows:

1. Turning an RLS OFF opens two N.C. contacts that are wired to Connection Points 3 and 8, and 4 and 9 on the RLS terminal block. This causes the safety output contacts of safety Relay SR to open. The Power LED on safety Relay SR remains illuminated (see Figure 4.35).

Figure 4.35
Safety Relay SR in Expansion Module without Time Delay

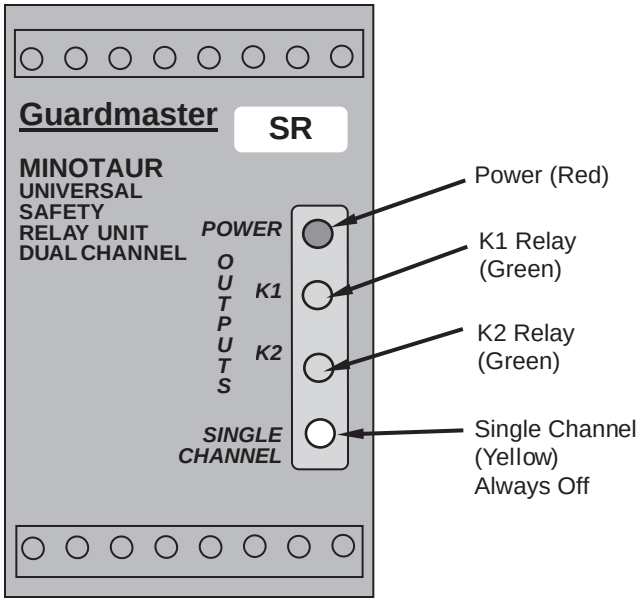

2. With the time delay Expansion Module, LEDs CH1 and CH2 are OFF and LEDs CHT1 and CHT2 are blinking, indicating the timing function (see Figure 4.36).

Figure 4.36
Safety Relay SR in Expansion Module with Time Delay

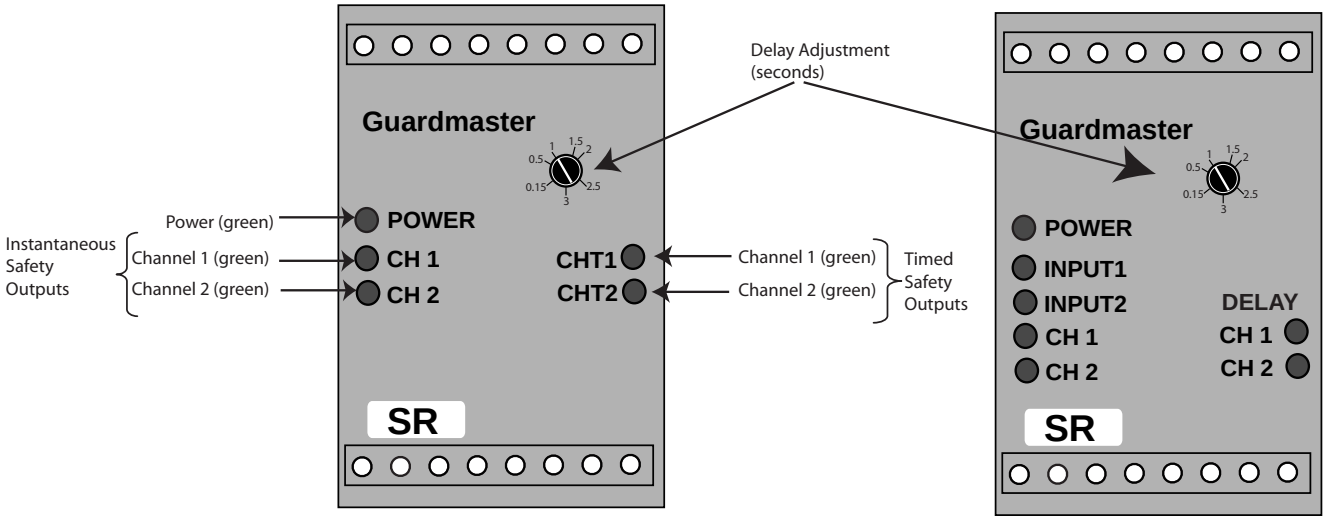

3. The timed safety output contacts of safety Relay SR that are interconnected to the input channels of safety Relay 2SR or 2ASR (110…1200 A only, RLS4…RLS6) in the Control Module via the EXB connector will time out and open (stop blinking). The safety output contacts for 2SR or 2ASR (110…1200 A only, RLS4…RLS6) will open. This causes power contactors 1IC and 2IC to de-energize.

4. The system control logic cycle continues (see *Operational Troubleshooting of the Expansion Module* on page 4-56).

- If contactor GC is energized, the ML pilot light and LED #41 in the Expansion Module are ON, but the RLS "System Isolated" light does not illuminate, the following faults might be possible:
  - The "System Isolated" light may need to be replaced (LED cluster).
  - The circuit through the RLS switch auxiliary contact to the LED light could be defective or missing. Perform a point-to-point check between terminals 21 and 22 in the switch and terminals 1 and 6 on the terminal block in the RLS.
- If contactor GC does not energize, the ML pilot light, LED #41 in the Expansion Module, and the RLS System Isolated light should all be OFF.

Preventive Maintenance

Section	Page
General	5-2
ElectroGuard® Power Panel	5-3
Isolation and Grounding Contactors Wiring Connections	5-8
Cooling Fans and Filters	5-11
Control Transformer and Circuit Protection	5-12
Equipment Ground	5-13
Isolated Ground Conductor	5-13
Product Information Labels	5-14
Control Module	5-16
Remote Lockout Station(s)	5-17
Expansion Module	5-22
Communication Module	5-23
Pneumatic Isolation Module	5-24
Final Preventive Maintenance Steps	5-25

ATTENTION

ElectroGuard® system modules are factory sealed with a tamper-indicating seal. Altering, defeating, or bypassing any module or component of the Safety Isolation System may result in personal injury, death, property damage, or economic loss. Only qualified service technicians must perform service or maintenance. Resealing of the modules is the responsibility of the person or organization performing the service or maintenance.

ATTENTION

Commissioning of the ElectroGuard® must be performed by a **qualified technician** familiar with the Safety Isolation System, who then seals the Remote Lockout Station(s). The Safety Isolation System Control Module, and optional Expansion and Pneumatic Isolation Modules are factory sealed. The technician responsible for the commissioning process should record the commissioning and all subsequent servicing of the system.

General

The user has the responsibility to develop an appropriate preventive maintenance schedule per NFPA 70B. Rockwell Automation recommend at a minimum of an annual schedule. If the system is cycled more than 150 times per day a more frequent schedule is required.

The following are recommended scheduled preventive maintenance inspections on various components of the SIS.

Using the operational life and the estimated number of operations, the need for replacement can be estimated for the contactor assembly, the Control Module, and the RLS. The expected electrical and mechanical life for these components is listed in Table 5.1:

Table 5.1

Component	Anticipated Electrical Life (Operations)	Anticipated Mechanical Life (Operations)
Power contactor	❶	❶
RLS switch	200,000	200,000
Safety relay (in Control Module)	500,000	2,000,000

❶ Refer to life span for 100 C contactor on the 23…85 A, 100 D for 110…860 A, and 100 G for 1200 A.

ElectroGuard® Power Panel

ATTENTION

Hazardous voltage or other forms of energy could be present. To avoid serious injury or death:

Prior to beginning the installation and wiring process, make sure that all forms of energy to the installation site are turned OFF and locked out.

ATTENTION

It is important that you inspect all product safety labels. If any of the labels are damaged, loose or illegible, they will be replaced at no charge.

1. Verify that product safety and information labels in Figures 2.3…2.20 are legible and not loose or damaged. If any label is damaged, loose or illegible, replacement labels can be obtained free of charge by contacting Rockwell Automation Technical Support or your local distributor.
2. Press the System OFF push button on the front of the ElectroGuard® Power Panel.
3. Follow your facility's LOTO procedures.
4. Turn the handle of the branch circuit protection on the ElectroGuard® Power Panel, or the upstream customer-supplied branch circuit protection feeding electrical energy to the SIS OFF. Padlock the branch circuit protection operating handle in the OFF position.
5. If the SIS includes a Communication Module, de-energize and padlock the electrical energy feeding these modules.
6. If the machine has a source of pneumatic energy, shut off the air valve supplying the pneumatic energy to the machine and padlock it in the OFF position. (The pneumatic energy lockout valve must be located upstream of the Pneumatic Isolation Module.)
7. Open the ElectroGuard® Power Panel enclosure door by loosening the cover hold-down fasteners (see Figure 2.21 or 2.22).
8. Verify that product safety and information labels in Figures 5.19 and 5.20 are legible and not loose or damaged. If any label is damaged, loose or illegible, replacement labels can be obtained free of charge by contacting Rockwell Automation Technical Support or your local distributor.
9. Inspect the enclosure interior cleanliness. Clean dust and dirt from the enclosure interior with a vacuum cleaner.

Door Operated Devices

Perform inspection of door-mounted pilot devices:

- Verify finger-safe covers are still on contact terminals
- Inspect push button operators, pilot lights, and contact blocks for physical damage and proper operation

ElectroGuard® Service Log

Verify the Service Log has been maintained with the following information:

- Serial Number of the unit
- Date of Commissioning
- Name of the Commissioning Technician
- Name of the Service Technician
- Description of the service performed
- Date of the service

If required information has not been entered in the ElectroGuard® Service Log, report it to the department responsible for the log.

Power Connections

Re-torque the incoming and outgoing power cable connections. (See torque label affixed to the inside of the enclosure door for proper torque values.)

Disconnect Switch (if Equipped)

Depending on the type of disconnect switch, either "fold back" the terminal guard (see Figure 5.1) or loosen the shield mounting screws and lift off the safety shield (see Figures 5.2 and 5.3). Check incoming power connections for proper torque.

Figure 5.1
Safety Guard and Incoming Line Connection Points on Optional Disconnect Switch

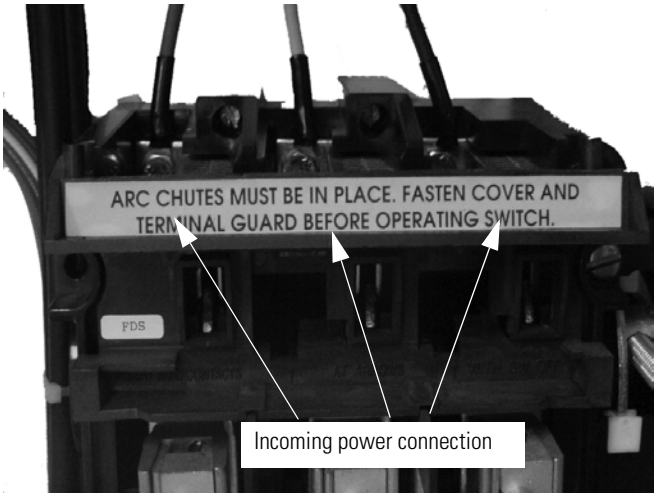

Figure 5.2
Boltswitch Protective Shield Attachment Screws

Figure 5.3
Typical Incoming Line Power Lugs with Safety Shield Removed for Service Access

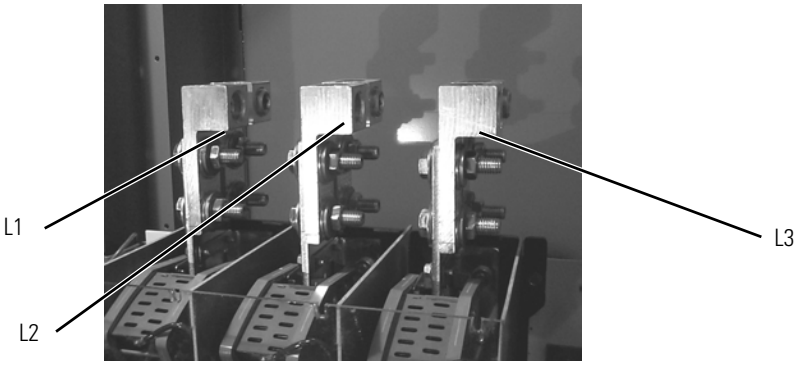

If multi-strand wire is used, verify all strands are contained by the terminal clamp or lug. If any wire strands are not contained by the terminal clamp or

lug, loosen the clamp or lug set screw, remove the wire, push the strands together, insert the wire, and torque the connection to the level shown on the torque label.

Thermal-Magnetic Circuit Breaker (Option)

Inspect line side power connections for proper torque. If multi-stranded wire is used, verify all wire strands are contained by the terminal lug. If any wire strands are not contained, loosen the lug set screw, remove the wire, push the strands together, re-insert the wire, and torque the connection to the level shown on the torque label (see Figure 5.4).

Figure 5.4
Example of Incoming Line Connection Points on Optional Thermal-Magnetic Circuit Breaker

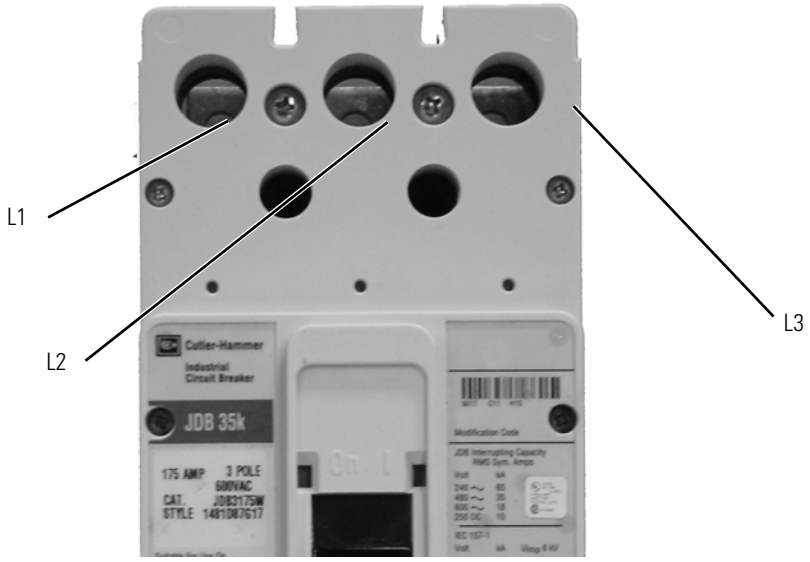

(Non-Combination System)

1. Inspect line and load power wire connections on the power distribution block for proper torque.

2. Remove the protective shield provided, to access the power terminals.

3. If multi-stranded wire is used, verify all strands are contained in the terminal lug. If any wire strands are not contained, loosen the lug set screw, remove the wire, push the strands together, re-insert the wire, and torque the connection to the level shown on the torque label (see Figure 5.5 or 5.6).

4. Re-torque line and load power wire connections, per torque table on door.

Figure 5.5
(23… 85 A) Power Distribution Block

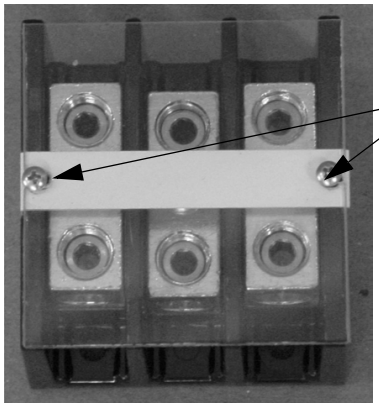

Figure 5.6
(110… 1200 A) Power Distribution Block

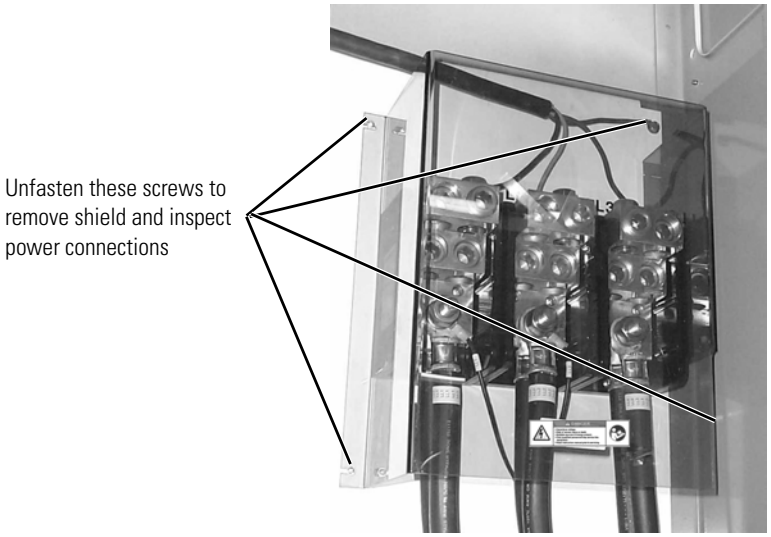

Isolation and Grounding Contactors Wiring Connections

ATTENTION

Hazardous voltage or other forms of energy could be present. To avoid serious injury or death:

Make certain to replace the protective shield on the power distribution block after inspecting the wire connections on the power terminals.

ATTENTION

ElectroGuard® system modules are factory sealed with a tamper-indicating seal. Altering, defeating, or bypassing any module or component of the Safety Isolation System may result in personal injury, death, property damage, or economic loss. Only qualified service technicians must perform service or maintenance. Resealing of the modules is the responsibility of the person or organization performing the service or maintenance.

In order to inspect the wiring connections on the power contactors, it is first necessary to remove the tamper-indicating seal for the protective shield. Then loosen and remove the mounting screws that hold the contactor shield in place (see Figure 5.8 for the 23…85 A, and Figure 5.7 for the 110…1200 A).

Figure 5.7
(110...1200 A) Removing Power Contactor Protective Shield

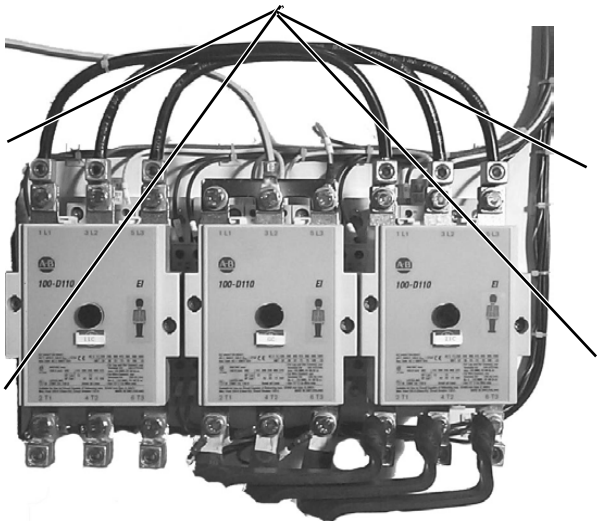

Figure 5.8
(23...85 A) Removing the Power Contactor Protective Shield

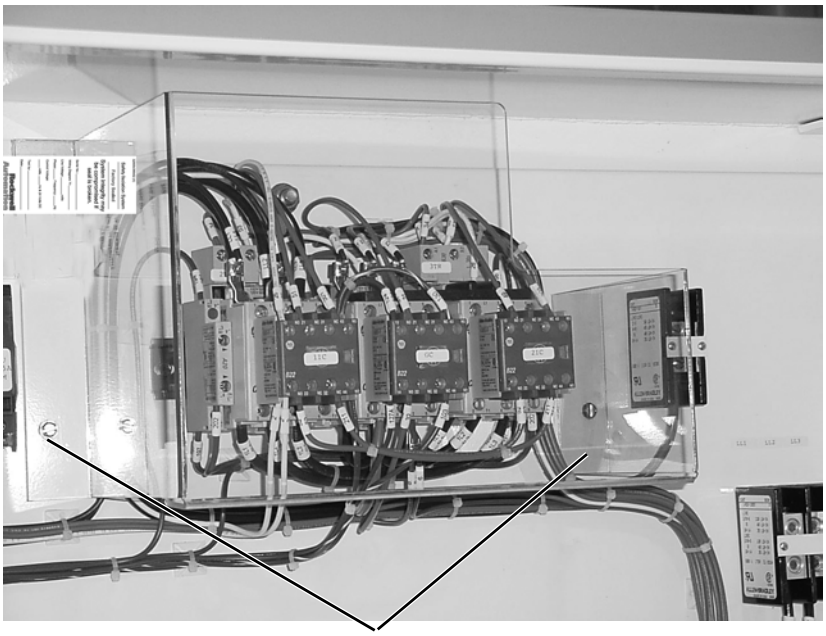

Remove shield bracket mounting screws adjacent to left and right sides of contactor assembly

1. After removing the shield mounting screws, remove the contactor shield to gain access to the power contactor wiring.

2. Inspect wiring connections (see Figures 5.9 and 5.10) for proper torque as indicated on the torque label.

Figure 5.9
(23...85 A) Inspect Power Connections on the Contactors

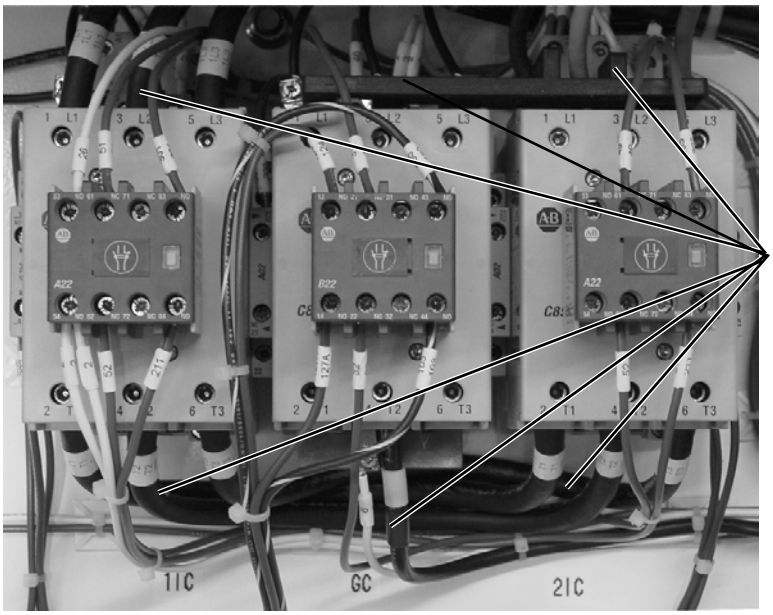

Figure 5.10
(110…1200 A) Inspect Power Connections on the Contactors.

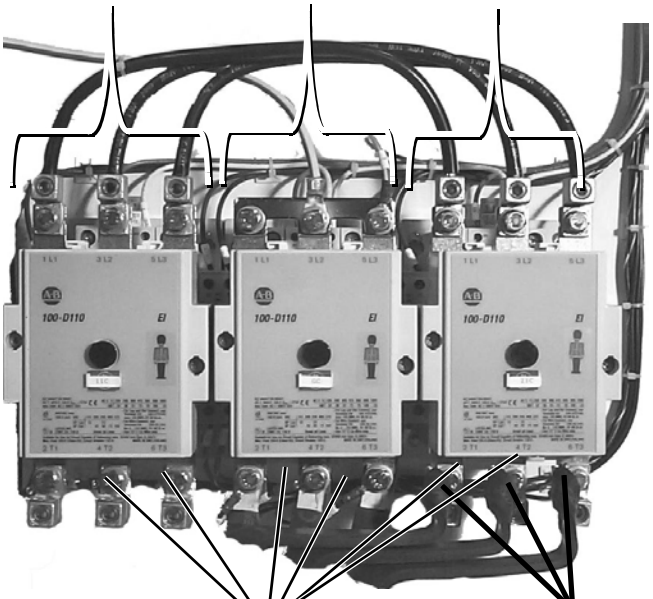

3. When checking the lower power wire connections, include a re-torque of the load lug mounting bolts. See the torque specifications on the torque label location on the inside of the panel door.

4. The top covers on 1IC, 2IC, and GC contactors may be removed to allow visual inspection of the power contacts. If contacts show excessive wear or physical damage, they must be replaced. If the power contactors are near the end of their normal life expectancy, the complete contactor must be replaced (see Chapter 6 for replacement procedures).

5. Check for secure mounting of auxiliary contacts and the electrical/ mechanical interlocks on the power contactors.

6. Verify mounting screws, when used on these devices, are in place and secure. Verify the control wiring is secure and torqued to values indicated on the torque label.

7. Make certain to replace the protective shield over the power contactors after completing the inspection of the wire connections.

8. Re-install the appropriate tamper-indicating seal on the contactor shield. See Figure G.9 on page G-3 and Figure G.10 on page G-4.

Cooling Fans and Filters

Clean dust and dirt from the fans and filters with a vacuum cleaner. The fans should be free to rotate without binding or obstruction. Verify fan ground wire is securely attached (see Figures 5.11, 5.12, and 5.13).

Figure 5.11
Typical ElectroGuard® Power Panel Fan and Fan Ground Wire Connection

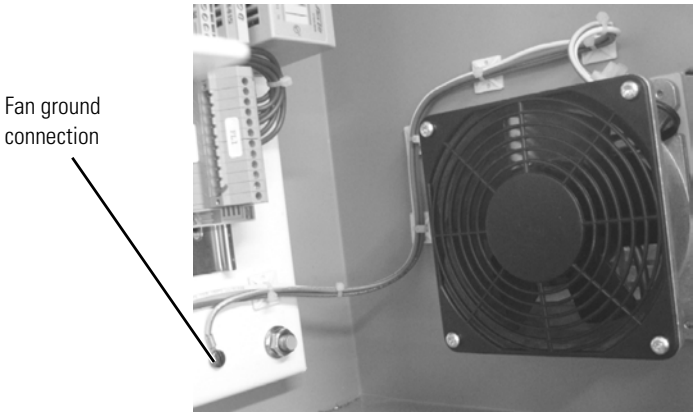

Figure 5.12
Typical Removal of an ElectroGuard® Power Panel Filter Grille for Filter Inspection or Cleaning

Figure 5.13
Removing Filter Media for Inspection or Cleaning

Control Transformer and Circuit Protection

1. Verify that all wire connections to the control transformer are secure as indicated on the torque label.

2. Verify the primary and secondary fuses/circuit breakers are present, and are the appropriate type, voltage, and ampacity as indicated on the fuse label affixed to the inside of the ElectroGuard® Power Panel door.

Figure 5.14
Checking the Wiring and Fusing of the Control Transformer

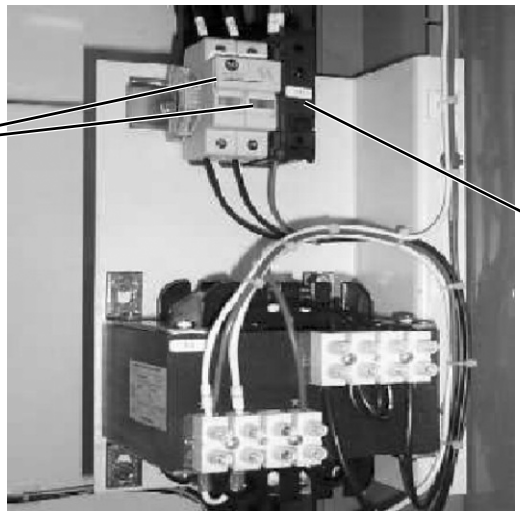

IMPORTANT The control transformer installed in the ElectroGuard® Power Panel is dedicated to the use of the Control Module relay logic only. Additional loads or circuits must not be connected to the control transformer. Added loading could compromise the circuit integrity and prevent system operation.

Equipment Ground

Re-torque the connection to the Equipment Ground Lug and tighten as indicated on the torque Label (see Figured 5.15 and 5.16).

Figure 5.15
(23…85 A) Equipment Ground Conductor (P.E.) Lug

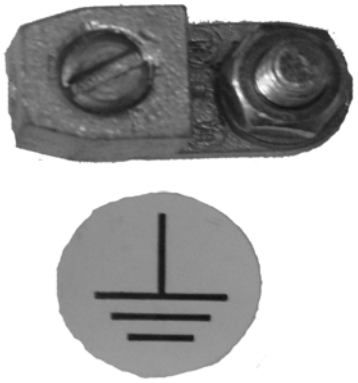

Figure 5.16
(110…1200 A) Equipment Ground Conductor (P.E.) Lug

Isolated Ground Conductor

Verify that the isolated ground conductor is connected to the Isolated Ground Terminal Block and re-torque as indicated on the torque label (see Figure 5.17 and Figure 5.18 on page 5-14).

Figure 5.17
(110…1200 A) Isolated Ground Terminal Block

Figure 5.18
Isolated Ground Terminal Block (110…1200 A)

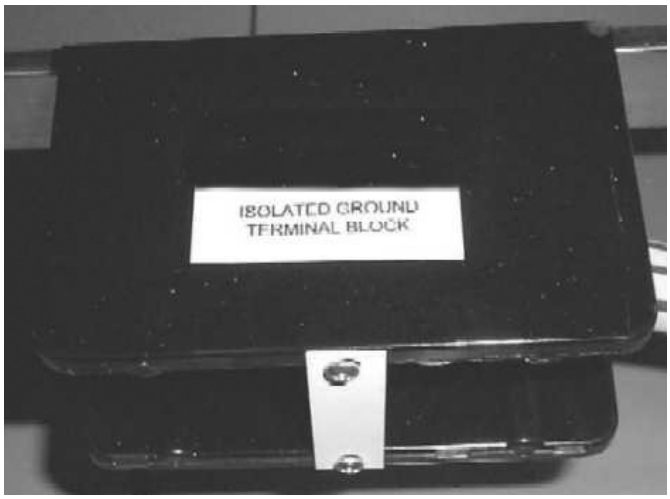

Product Information Labels

Figure 5.19 .
Control Module (23…85 A)

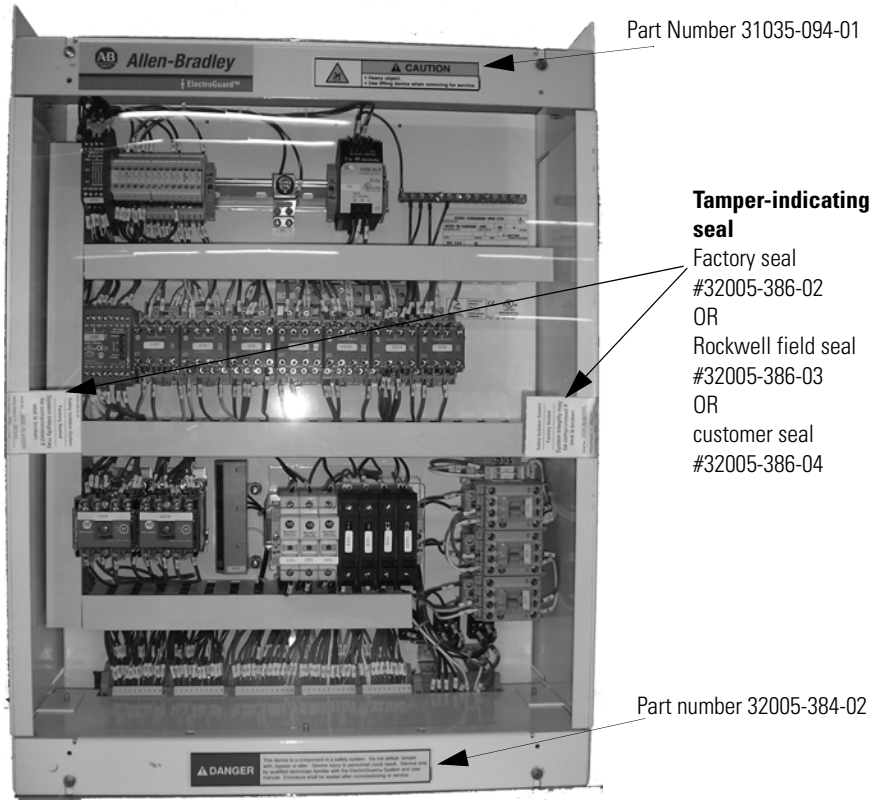

Figure 5.20
Control Module (110…1200 A)

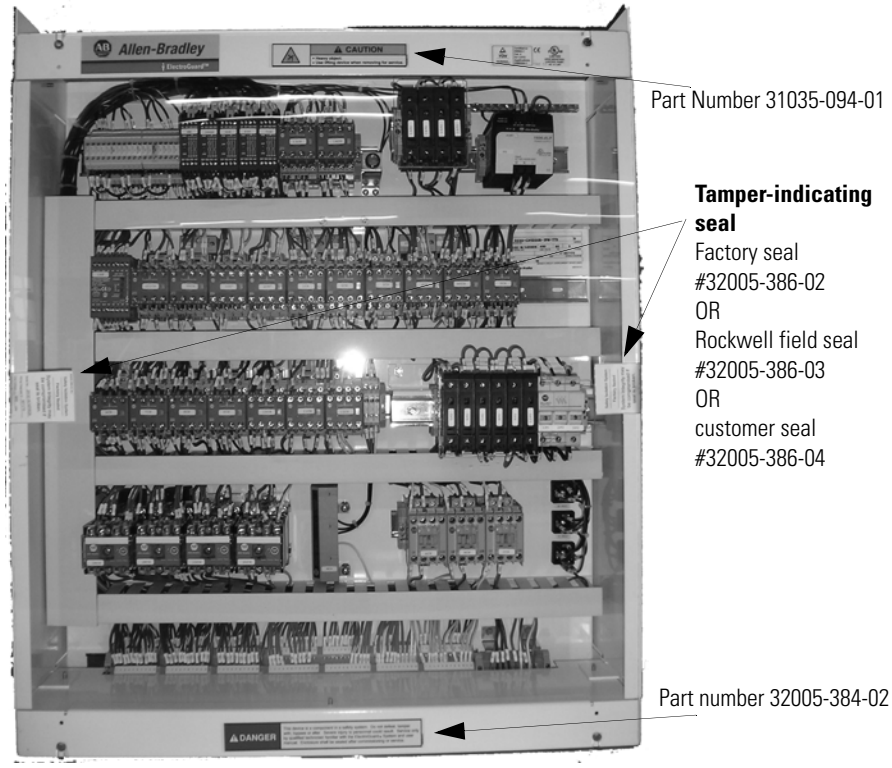

Control Module

ATTENTION

ElectroGuard® system modules are factory sealed with a tamper-indicating seal. Altering, defeating, or bypassing any module or component of the Safety Isolation System may result in personal injury, death, property damage, or economic loss. Only qualified service technicians must perform service or maintenance. Resealing of the modules is the responsibility of the person or organization performing the service or maintenance.

1. Visually inspect for loosened parts, wires, components, and mounting hardware through the module's shield.
2. Inspect the fuses in the Control Module to verify they are the appropriate type, voltage, and amperage as factory installed.
3. Verify all external connectors and cables are firmly attached, and have not been damaged (see Figure 5.21 or 5.22).

Figure 5.21
(23...85 A) Checking the Control Module Connector Plugs

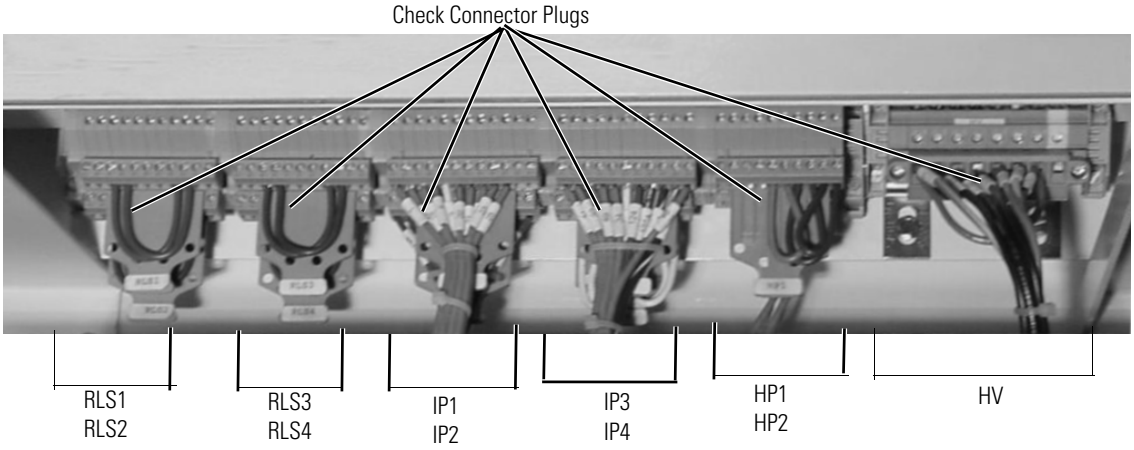

Figure 5.22
(110...1200 A) Checking the Control Module Connector Plugs

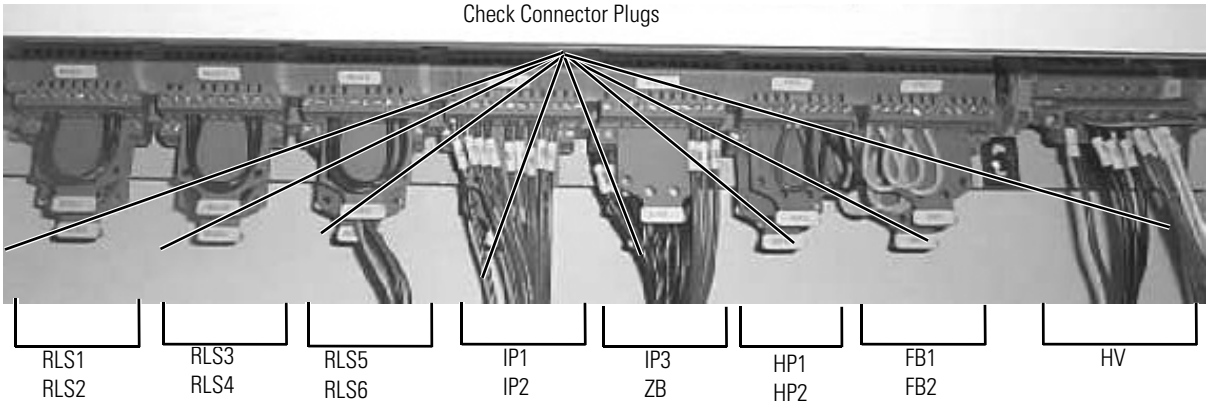

Verify the tamper-indicating seal has not been broken or tampered with (see Figure 5.19 or 5.21).

Remote Lockout Station(s)

IMPORTANT The Remote Lockout Station may have a wire seal. In order to inspect the interior of the Remote Lockout Station, it will be necessary to break the wire seal (see Figure 5.23). Follow your facility's procedures for accessing and resealing the Remote Lockout Stations.

Perform the following preventive maintenance on each Remote Lockout Station.

Figure 5.23 .
Removing Customer Wire Seal from Remote Lockout Station

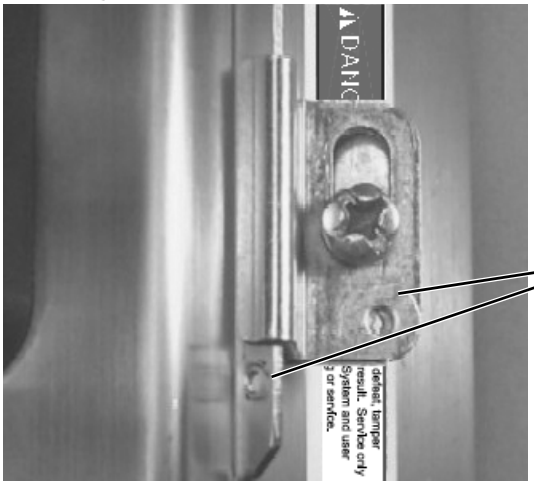

Figure 5.24
Cover Clamp Screws on the Remote Lockout Station Enclosure

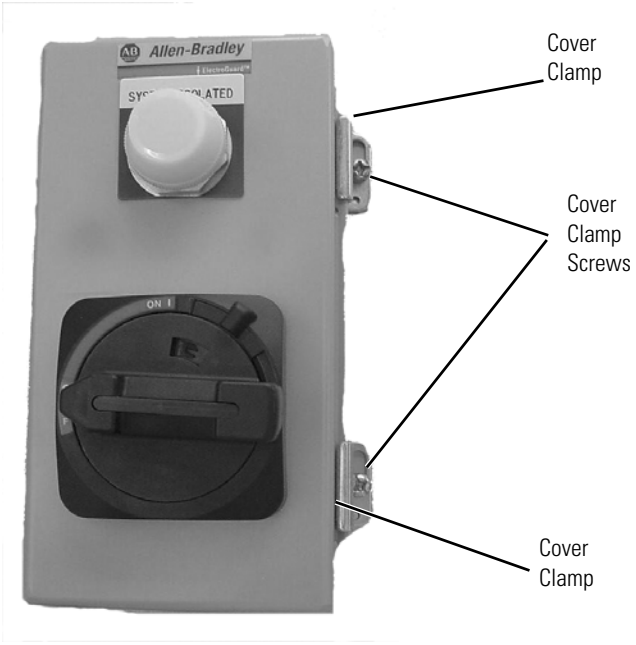

1. Verify the product safety label (See Appendix G, part number 32005-384-02 or 32005-383-02) is present, legible, and not damaged or loose. If this label is damaged, loose or illegible, replacement labels can be obtained at no charge to the customer by contacting Rockwell Automation Technical Support or your local distributor.

2. To open the RLS enclosure cover, rotate the operating handle in the OFF position. Squeeze the handle interlock lever and operating handle as in Figure 5.25. Lift the enclosure cover away from the base.

Figure 5.25
Opening the Remote Lockout Station

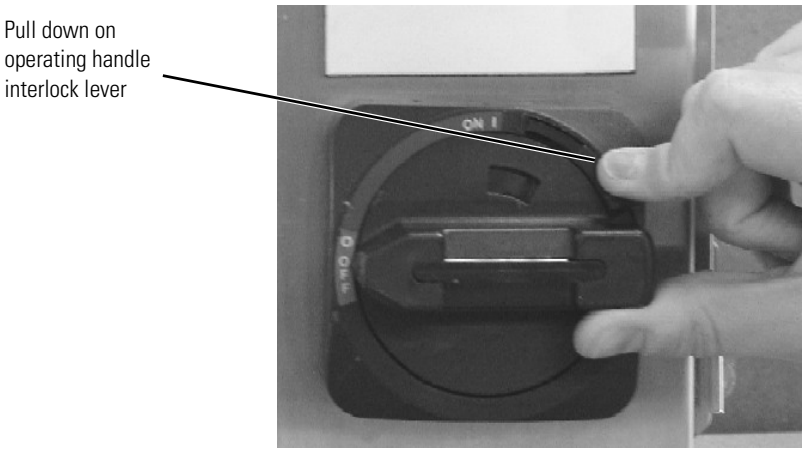

3. Visually inspect the inside of the Remote Lockout Station for loosened parts, wires, or mounting hardware. Check to see that the enclosure external mounting bolts are tight.

4. Inspect the following and reference the torque label affixed to the inside of the ElectroGuard® Power Panel enclosure door, when applicable:
   - Terminal block wire connections all secure.
   - Ground wire connection to ground terminal block secure.
   - Door/base ground bond wire securely attached.
   - Wire connections at the load switch securely attached.
   - Incoming cable conduit fitting secured to enclosure.
   - The plug for unused conduit hole is in place and secure.
   - Switch handle and locking tab not damaged.
   - Door closing hardware in good condition.
   - The “SYSTEM ISOLATED” light lens and LED are in place and in good condition.

5. Close the RLS enclosure cover on the base. Squeeze the handle interlock lever and operating handle. Rotate the operating handle to the ON position.

6. If required, the Remote Lockout Station enclosure must be re-sealed with a new customer supplied wire seal after the inspection has been completed.

Figure 5.26
Remote Lockout Station Interior

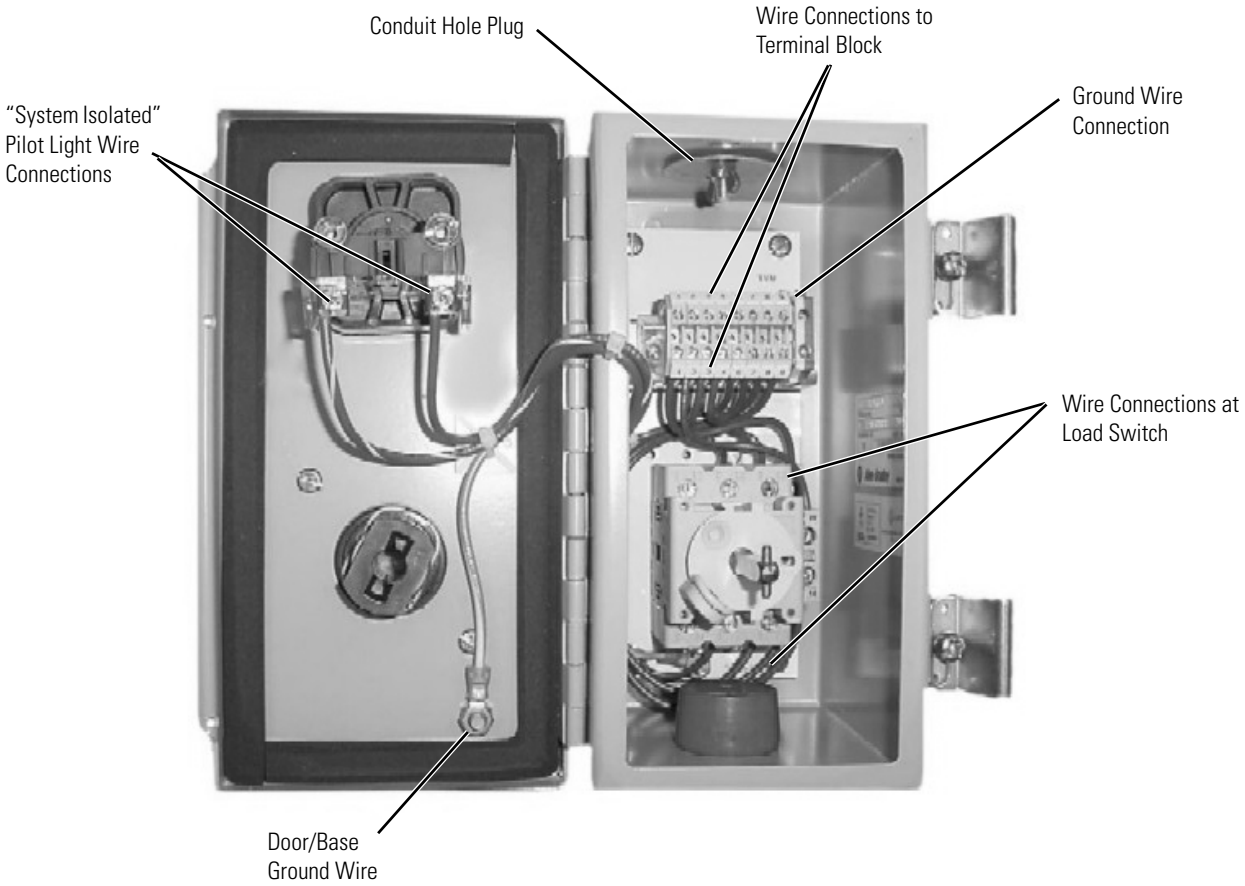

Check each Remote Lockout Station for proper wiring and operation as follows:

1. At the power panel, remove the Remote Lockout Station connector plug from the terminal block at the Control Module or the Expansion Module (see Figure 5.27).

Figure 5.27
Control Module RLS Connectors

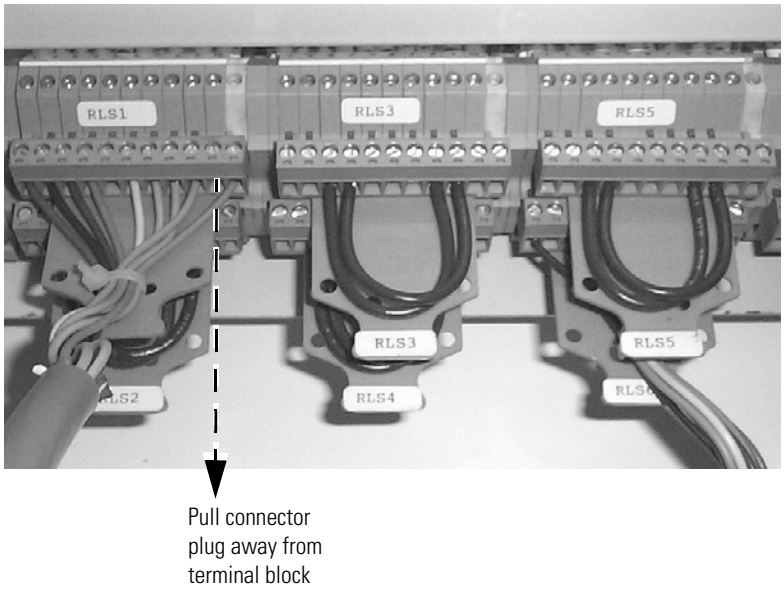

2. Have one technician operate the Remote Lockout Station while a second technician checks continuity between connection points on the Remote Lockout Station connector plug at the Control Module or the Expansion Module as outlined in Table 5.2, "Continuity Check Table".

Table 5.2
Continuity Check Table

Remote Lockout Station Status	Control Module / Expansion Module Connector Plug Connection Point Numbers	Continuity
On	2 & 7	Yes
On	3 & 8	Yes
On	4 & 9	Yes
On	1 & 6	No
Off	2 & 7	No
Off	3 & 8	No
Off	4 & 9	No
Off	1 & 6	Yes ❶

❶ The "SYSTEM ISOLATED" light on the front of the Remote Lockout Station has an impedance of about 2k Ohms.

If a Remote Lockout Station connector plug is not used, grip the strain relief pad holding the Remote Lockout Station connector and remove the connector by pulling it away from the control Module or Expansion Module. Verify that jumper wires have been installed at connection points (3) and (8) and (4) and (9). (See Table 5.3 and Figure 5.28 for jumper information.)

Table 5.3 Jumpering Out an Unused Remote Lockout Station PortStation

Connector Plug	Connection Points	Recommended Wire
RLS1 through RLS6	3 and 8	#16 AWG MTW, blue/ 1.3mm blue
	4 and 9	

Figure 5.28
Jumper Wire Installation on a Connector plug for an Unused Remote Lockout Station

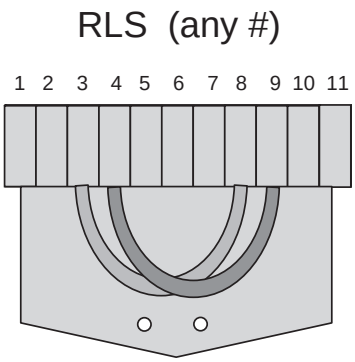

IMPORTANT When a Remote Lockout Station is installed, the two jumper wires must be removed from the plug that will be used to connect it.

3. Check that no connection point has continuity with any other connection point or ground when the Remote Lockout Station operating handle is in the ON position, except as stated in Table 5.2.

4. Check that no connection point has continuity with any other connection point or ground when the Remote Lockout Station operating handle is in the OFF position, except as stated in Table 5.2.

5. If a Remote Lockout Station fails any of the above continuity checks, check point-to-point wiring between the terminal block in the Remote Lockout Station enclosure and the Remote Lockout Station connector plug in the control module.

IMPORTANT The five-step procedure outlined above must be repeated for each Remote Lockout Station.

Expansion Module

ATTENTION

ElectroGuard® system modules are factory sealed with a tamper-indicating seal. Altering, defeating, or bypassing any module or component of the Safety Isolation System may result in personal injury, death, property damage, or economic loss. Only qualified service technicians must perform service or maintenance. Resealing of the modules is the responsibility of the person or organization performing the service or maintenance.

1. If the SIS includes a Communication Module, de-energize and padlock the electrical energy feeding these modules.
2. Visually inspect for loosened parts, wires, components, and mounting hardware through the module's shield.
3. Inspect the fuses in the Expansion Module to verify they are of the correct ampacity.
4. Verify all external connectors and cables are firmly attached, and have not been damaged (see Figure 5.26).

Figure 5.29
Checking the Expansion Module Connector Plugs

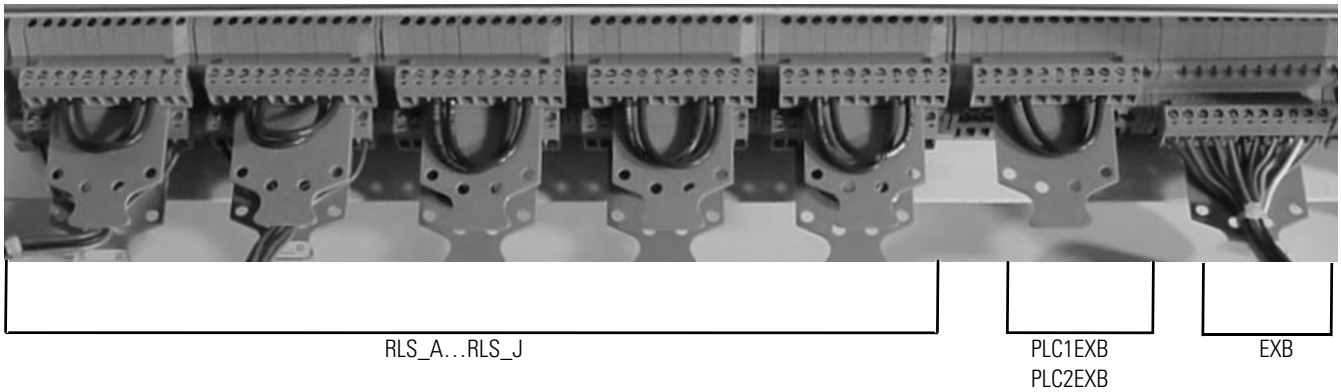

5. Reference the torque label affixed to the inside of the ElectroGuard® Power Panel enclosure door when applicable.
6. Verify the tamper-indicating seal has not been broken or tampered with (see Figures 2.18 and 2.19).

Communication Module

1. Verify the Communication Modules are secured to the mounting rail.
2. Verify fuses are of the appropriate value.
3. Verify all control wiring to the power supplies, adapter module, and input module is secured.
4. Verify the communication cable and connectors are secured on the Communication Adapter.
5. Verify that the ferrite cores are attached to the incoming power supply wires and communication cable.
6. Refer to the torque label affixed to the inside of the ElectroGuard® Power Panel enclosure door when applicable.

Pneumatic Isolation Module

ATTENTION

ElectroGuard® system modules are factory sealed with a tamper-indicating seal. Altering, defeating, or bypassing any module or component of the Safety Isolation System may result in personal injury, death, property damage, or economic loss. Only qualified service technicians must perform service or maintenance. Resealing of the modules is the responsibility of the person or organization performing the service or maintenance.

1. Verify that the product safety labels and product information labels in Figure 2.20 are legible and not loose or damaged. If any label is damaged, loose or illegible, replacement labels can be obtained free of charge by contacting Rockwell Automation Technical Support or your local distributor.

2. Verify that the tamper-indicating seal has not been broken or tampered with. If the tamper-indicating seal has been damaged or tampered with, the module must either be replaced or recommissioned by a **qualified technician** familiar with the ElectroGuard® System.

3. Inspect external connector and cable to verify they are firmly attached (see Figure 5.30).

Figure 5.30
Pneumatic Isolation Module

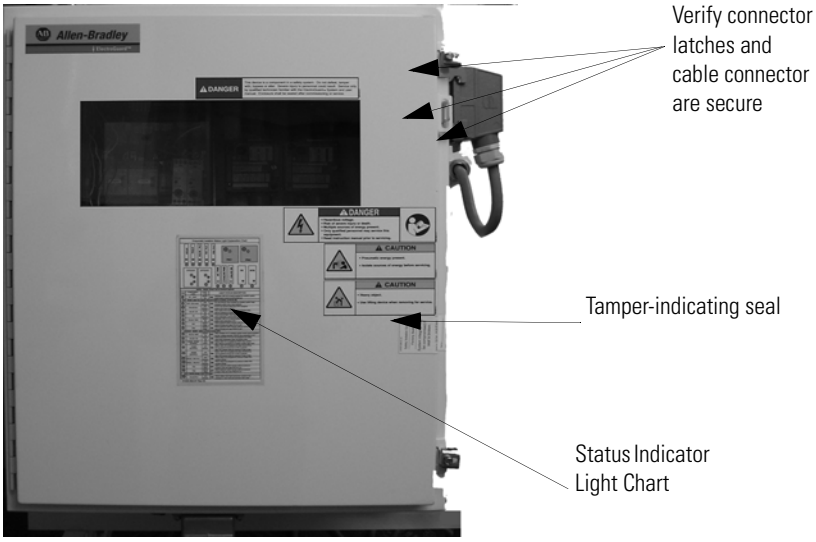

4. Verify the Indicator Light Explanation Chart is affixed to the module door and legible.

5. Check the air exhaust muffler and check valve located on the bottom of the Pneumatic Isolation Module enclosure to make sure they are securely attached and not obstructed.

6. It is recommended that the customer's installed filters (as specified in the installation instructions) upstream from the Pneumatic Isolation Module, be inspected and cleaned/replaced if necessary. Follow your facility's procedure for checking/changing system air filters upstream of the Pneumatic Isolation Module.

Final Preventive Maintenance Steps

1. Close the covers of the Remote Lockout Stations. Install a wire seal on each Remote Lockout Station.
2. Close the ElectroGuard® Power Panel enclosure and secure the cover fasteners.
3. If the Safety Isolation System includes the Communication Module option, remove the padlock from the electrical energy feeding the Communication Module power supply, and turn it back "On".
4. If pneumatic energy was isolated, remove the padlock from the shut-off valve supplying the pneumatic energy to the machine. Turn the pneumatic energy "On".
5. Remove the padlock from the disconnecting means on the ElectroGuard® Power Panel, or the disconnecting means feeding electrical energy to the Safety Isolation System. Move the disconnecting means operating handle to the ON position.
6. Press the "SYSTEM ON" push button on the front of the ElectroGuard® Power Panel enclosure.
7. Follow the start-up procedures to re-start the machine.

Notes:

Replacement Procedures

Section	Page
Remote Lockout Station	6-2
Remote Lockout Station Load Switch Assembly	6-7
Remote Lockout Station System Isolated LED	6-12
Remote Lockout Station Light Assembly	6-13
Control Module	6-16
Power Contactor and/or Mechanical Interlock (23…85 A)	6-26
Power Contactor and/or Mechanical Interlock (110…1200 A)	6-35
Control Circuit Transformer	6-39
Push Buttons/Pilot Lights	6-43
Expansion Module	6-47
Communication Module	6-51
Pneumatic Isolation Module	6-53

General

The information in the following sections is provided to the user as replacement procedures for the ElectroGuard® Safety Isolation System.

Remote Lockout Station

ATTENTION

Hazardous voltage or other forms of energy could be present. To avoid serious injury or death:

Prior to beginning the installation and wiring process, make sure that all forms of energy to the installation site have been properly turned OFF and locked out.

ATTENTION

ElectroGuard® system modules are factory sealed with a tamper-indicating seal. Altering, defeating, or bypassing any module or component of the Safety Isolation System may result in personal injury, death, property damage, or economic loss. Only qualified service technicians must perform service or maintenance. Resealing of the modules is the responsibility of the person or organization performing the service or maintenance.

ATTENTION

Only qualified service technicians familiar with the ElectroGuard® and associated machinery should plan or implement the installation, commissioning, and subsequent maintenance of the system. Failure to do this may result in personal injury and/or equipment damage.

ATTENTION

To avoid serious injury or death, make sure that the machine or process has been stopped by the proper stopping means, and electrical and pneumatic energy isolated, before attempting to replace any of the SIS components.

Remote Lockout Station

Removal

1. If it is not already OFF, turn the operating handle on the RLS to the OFF position.

2. Break the seal placed on the RLS by your facility. The seal ties the RLS cover to its base (see Figure 6.1 for the seal location).

Figure 6.1
Remote Lockout Station Seal

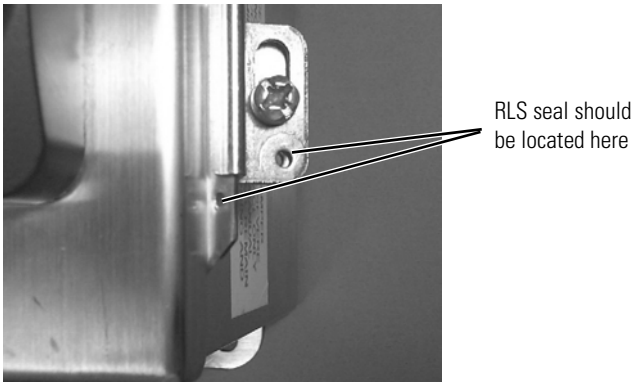

3. Loosen the two cover screws on the RLS (see Figure 6.2).

Figure 6.2
Remote Lockout Station Cover Screws

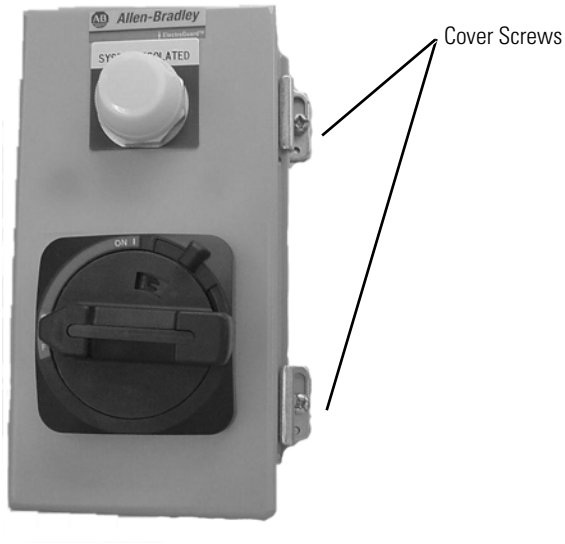

4. To open the RLS enclosure cover, rotate the operating handle in the OFF position. Squeeze the handle interlock lever and operating handle and lift the enclosure cover away from the base (see Figure 6.3).

Figure 6.3
Opening the Remote Lockout Station

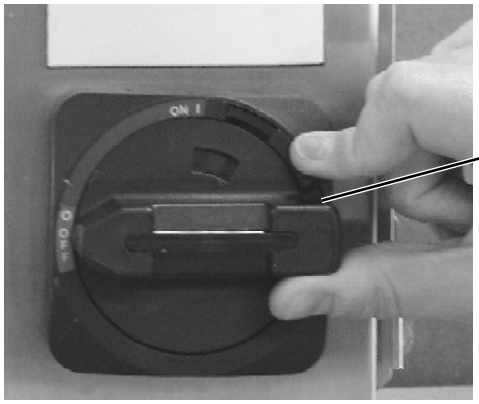

Note: If using color-coded or numbered wires, note and record their connection points on the RLS terminal block.

5. Loosen and remove the wires from the terminal block located near the top of the RLS (Nos. 1…9 and ground) (see Figure 6.4).

Figure 6.4
Terminal Strip in Remote Lockout Station

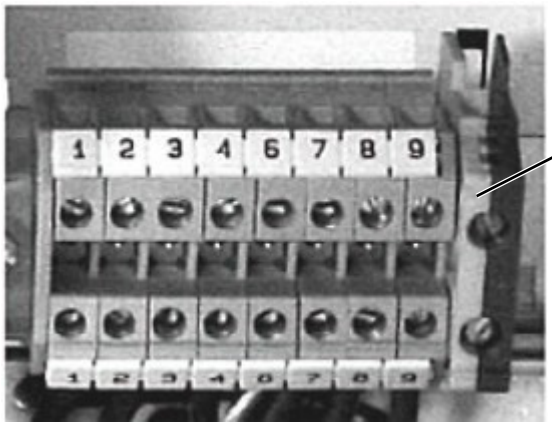

6. Loosen and remove the conduit hub and mounting screws from the RLS enclosure (see Figure 6.5).

   Note: The RLS weighs approximately 6 lbs. (2.7 kg).

Figure 6.5
Remote Lockout Station Mounting Holes

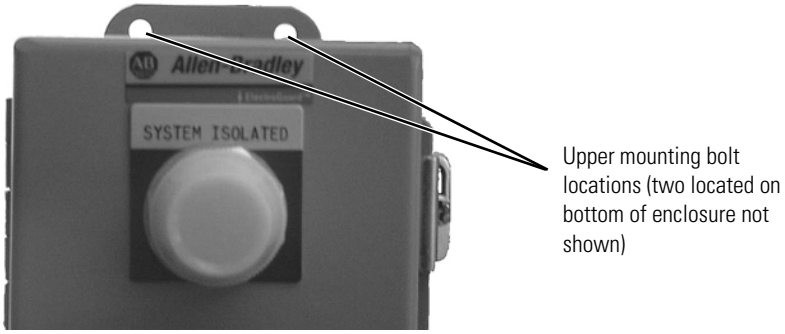

Installation

1. Position the replacement RLS over the four mounting holes.
2. Insert and secure the four mounting bolts for the RLS.
3. Loosen the two cover screws on the RLS.
4. If it is not already in the OFF position, rotate the operating handle of the RLS to the OFF position.
5. While holding the RLS operating handle in the OFF position, rotate the handle slide interlock mechanism clockwise and open the enclosure door.
6. Either:
   - If wiring to the RLS is to be bottom-fed, remove and discard the red plastic conduit plug from the bottom of the RLS (see Figure 6.6). Secure the conduit fitting and conduit.

     or

   - If the wiring to the RLS is to be top-fed, loosen the wing-nut and remove the top conduit plug (**do not discard the conduit plug**) (see Figure 6.7)

   Then, remove the red plastic conduit plug from the bottom of the RLS and discard. Install the conduit plug with wing-nut in the bottom conduit hole.

Figure 6.6
Bottom-Fed Remote Lockout Station Wiring

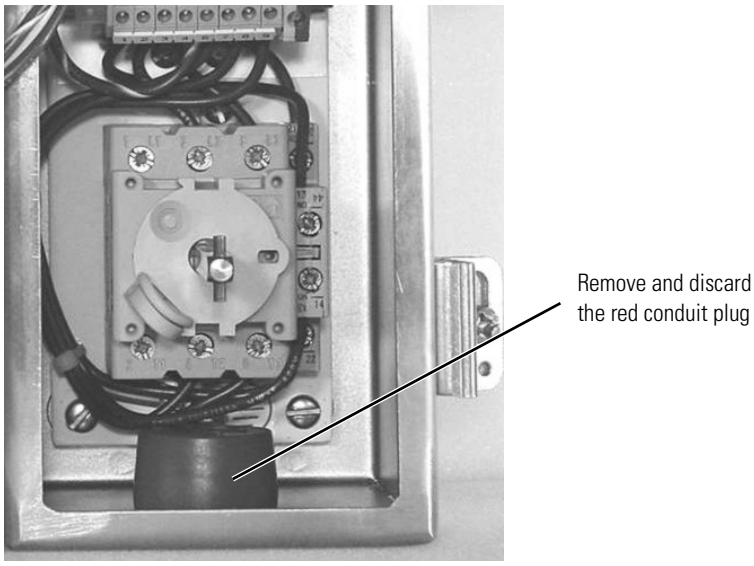

Figure 6.7
Top-Fed Remote Lockout Station Wiring

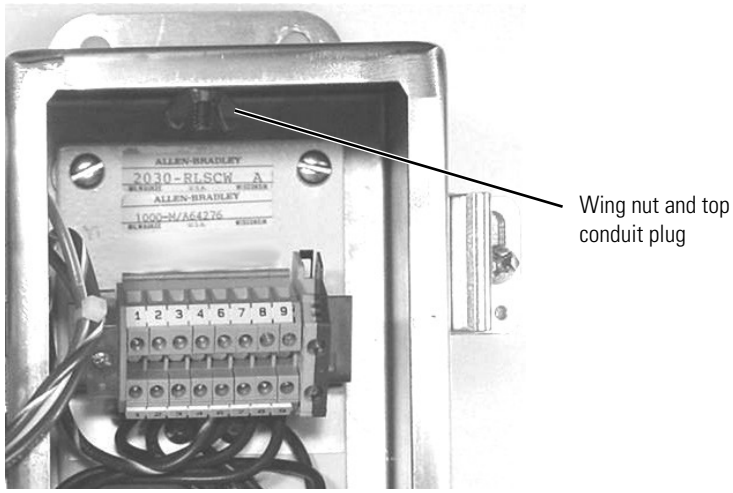

7. Secure the conduit fitting and conduit and reinstall the control wires to the corresponding labeled terminal block.

IMPORTANT Refer to the corresponding connection diagrams supplied with the RLS.

8. Secure the ground wire to the yellow/green ground terminal block.

9. While holding the RLS operating handle in the OFF position, rotate and hold the handle slide interlock mechanism as far clockwise as possible. Close the enclosure door and release the handle slide mechanism.

10. Retest the RLS circuit.

11. Tighten the two cover hold-down screws securely and, if applicable, reseal the enclosure.

Power Restoration

1. Remove the padlock from branch circuit protection on the SIS enclosure or the upstream customer-supplied branch circuit protection feeding electrical energy to the SIS. Turn the branch circuit protection operating handle to the ON position.

2. Turn the operating handle on the RLS to the ON position.

3. Press the System ON push button.

4. Recommission the system after the RLS is replaced.(See Chapter 3.)

5. Follow normal start-up procedures to restart the machine.

Remote Lockout Station Load Switch Assembly

Removal

1. If it is not already OFF, turn the operating handle on the RLS to the OFF position.

2. Break the seal placed on the RLS by your facility. The seal ties the RLS cover to its base (see Figure 6.1 for the seal location).

3. Loosen the two cover screws on the RLS (see Figure 6.2).

4. While holding the RLS operating handle in the OFF position, rotate the handle slide interlock mechanism clockwise and open the enclosure door (see Figure 6.3).

5. Remove all control wiring from load switch assembly (see Figure 6.8).

IMPORTANT If using color-coded or numbered wires, note and record their connection points on the RLS terminal block.

6. Remove the two mounting screws located at the top and bottom of the load switch assembly. See Figure 6-8.

Figure 6.8
RLS Load Switch Assembly

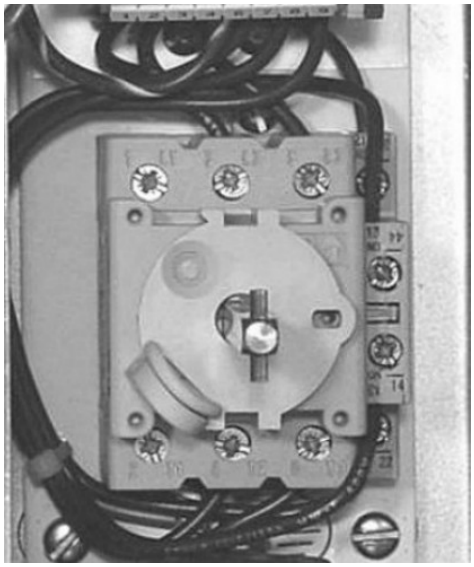

7. Remove the load switch from the enclosure.

Installation

1. Reconnect wiring to the load switch assembly (see Figure 6.9 and Table 6.1).

Figure 6.9
RLS Wiring Connections

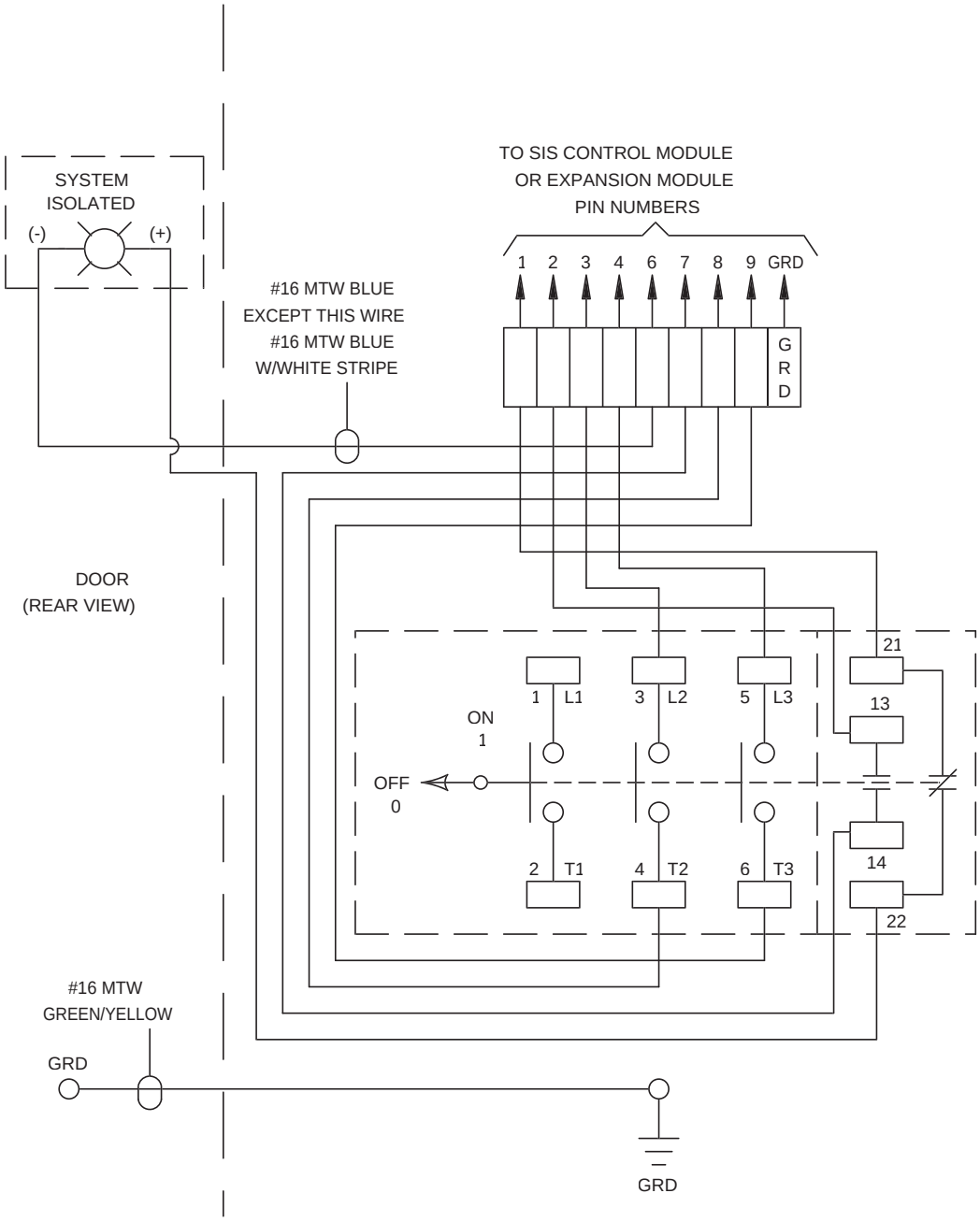

Table 6.1

RLS Terminal Block (Wire No.)	Connected to Terminal Load Switch
1	21 (N.C. Auxiliary Contact)
2	13 (N.O. Auxiliary Contact)
3	3 L2
4	5 L3
7	14 (N.O. Auxiliary Contact)
8	4 T2
9	6 T3
Connect the Positive Terminal of System Isolated light to 22 N.C. Auxiliary Contact.	

2. Align load switch assembly mounting screws with hole pattern on mounting plate.

3. Tighten top and bottom mounting screws on load switch.

4. Close the RLS and tighten the cover fasteners.

5. Re-install the tamper-indicating seal placed on the RLS by your facility (see Figure 6.10).

Figure 6.10
Remote Lockout Station Seal

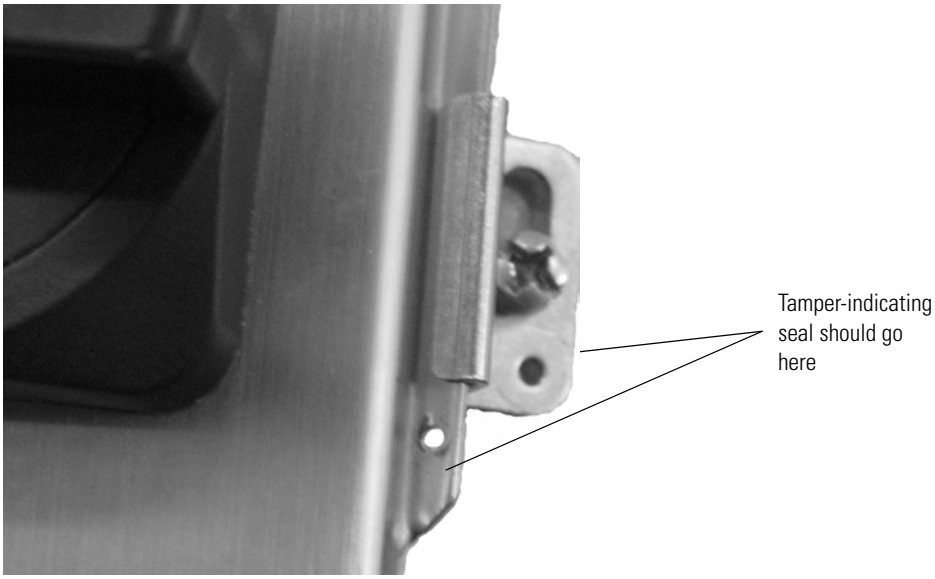

Power Restoration

1. Remove the padlock from branch circuit protection on the SIS enclosure or the upstream customer-supplied branch circuit protection feeding electrical energy to the SIS. Turn the branch circuit protection operating handle to the ON position.
2. Turn the operating handle on the RLS to the ON position.
3. Press the System ON push button.
4. Follow normal start-up procedures to restart the machine.

Remote Lockout Station System Isolated LED

ATTENTION

The System Isolated LED lamp used in the RLS is a 24V AC/DC amber or green LED. Do not replace this LED with any other lamp type (see Appendix E for LED part no.).

Removal

1. Unscrew the white or green lens cap on the System Isolated pilot light by rotating it counter-clockwise.
2. Press the LED and rotate it slightly counter-clockwise (see Figure 6.11).

Figure 6.11
LED Replacement

3. Remove the LED lamp.

Installation

1. Press the replacement LED and rotate clockwise to lock in place.
2. Replace the white or green lens cover on the System Isolated light and tighten it by rotating it clockwise until secure.

Remote Lockout Station Light Assembly

ATTENTION

Hazardous voltage or other forms of energy could be present. To avoid serious injury or death:

Prior to beginning the installation and wiring process, make sure that all forms of energy to the installation site have been properly turned OFF and locked out.

ATTENTION

ElectroGuard® system modules are factory sealed with a tamper-indicating seal. Altering, defeating, or bypassing any module or component of the Safety Isolation System may result in personal injury, death, property damage, or economic loss. Only qualified service technicians must perform service or maintenance. Resealing of the modules is the responsibility of the person or organization performing the service or maintenance.

ATTENTION

To avoid serious injury or death, make sure that the machine or process has been stopped by the proper stopping means, and the electrical and pneumatic energy isolated, before attempting to replace any of the ElectroGuard® SIS components.

Removal

1. Break the seal placed on the RLS by your facility. The seal ties the RLS cover to its base (see Figure 6.1 for the seal location).
2. Loosen the two cover screws on the RLS (see Figure 6.2).
3. While holding the RLS operating handle in the OFF position, rotate the handle slide interlock mechanism clockwise and open the enclosure door (see Figure 6.12).

Figure 6.12
Opening the Remote Lockout Station

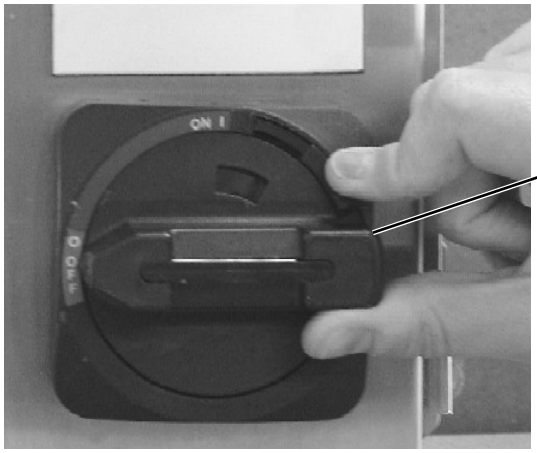

4. Remove the wiring from the back of the "System Isolated" pilot light, noting which terminal the blue wire is connected to, and to which terminal the blue wire with white stripe is connected (see Figure 6.13).

Figure 6.13
Removing Control Wires from the "System Isolated" Light Assembly

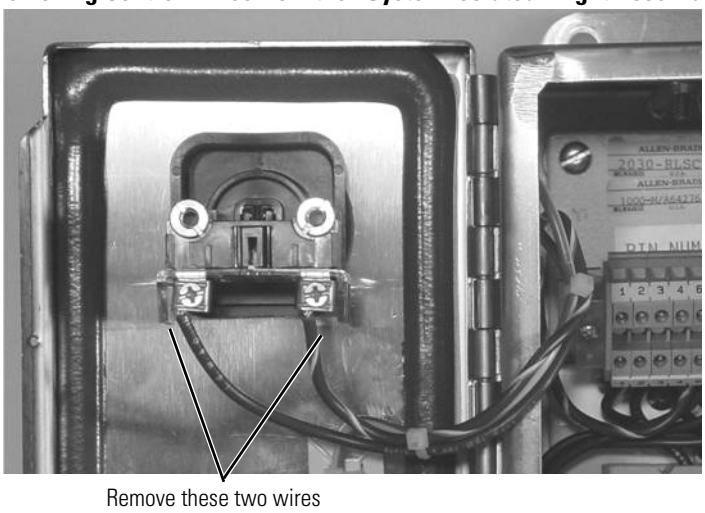

5. Using a wrench, loosen and remove the retaining ring on the front of the "System Isolated" pilot light by rotating the ring counter-clockwise (see Figure 6.14).

Figure 6.14
Removing the "System Isolated" Light Assembly

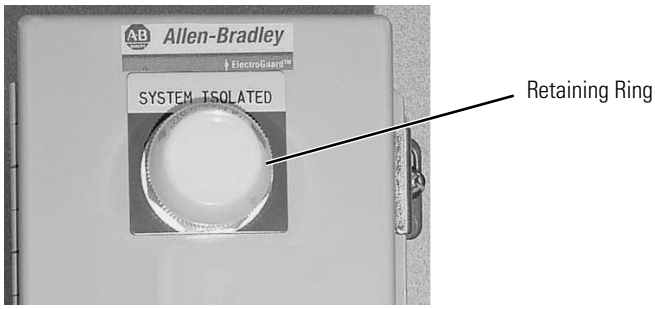

6. Remove the "System Isolated" pilot light assembly from the rear (inside of the RLS).

Installation

1. Install the new "System Isolated" pilot light assembly by following its installation instructions and re-connect the wiring to the back of the "System Isolated" pilot light assembly.

2. Close the RLS and tighten the cover fasteners and reseal.

Power Restoration

1. Remove the padlock from the branch circuit protection on the ElectroGuard® Power Panel or the branch circuit protection feeding electrical energy to the SIS.

2. Turn the branch circuit protection operating handle to the ON position.

3. Turn the operating handle on the RLS to the ON position.

4. Press the System ON push button.

5. Recommission the system for the RLS that had the "System Isolated" light replaced.

Control Module

ATTENTION

Hazardous voltage or other forms of energy could be present. To avoid serious injury or death:

Prior to beginning the installation and wiring process, make sure that all forms of energy to the installation site have been properly turned OFF and locked out.

ATTENTION

ElectroGuard® system modules are factory sealed with a tamper-indicating seal. Altering, defeating, or bypassing any module or component of the Safety Isolation System may result in personal injury, death, property damage, or economic loss. Only qualified service technicians must perform service or maintenance. Resealing of the modules is the responsibility of the person or organization performing the service or maintenance.

ATTENTION

To avoid serious injury or death, make sure that the machine or process has been stopped by the proper stopping means, and the electrical and pneumatic energy isolated, before attempting to replace any of the ElectroGuard®.

Removal

1. Open the ElectroGuard® Power Panel enclosure door by loosening the cover hold-down fasteners (see Figures 2.21 and 2.22).

2. Disconnect the following connector plugs from the terminal blocks located at the bottom of the Control Module by firmly gripping the strain relief pad (see Figures 6.15 or 6.16):
   - RLS1…RLS6
   - IP1
   - IP2
   - IP3
   - IP4 (23…85 A only)
   - ZB (110…1200 A only)
   - HP1 and HP2
   - FB1 and FB2 (110…1200 A only)

Figure 6.15
(110...1200 A) Control Module Connector Plugs

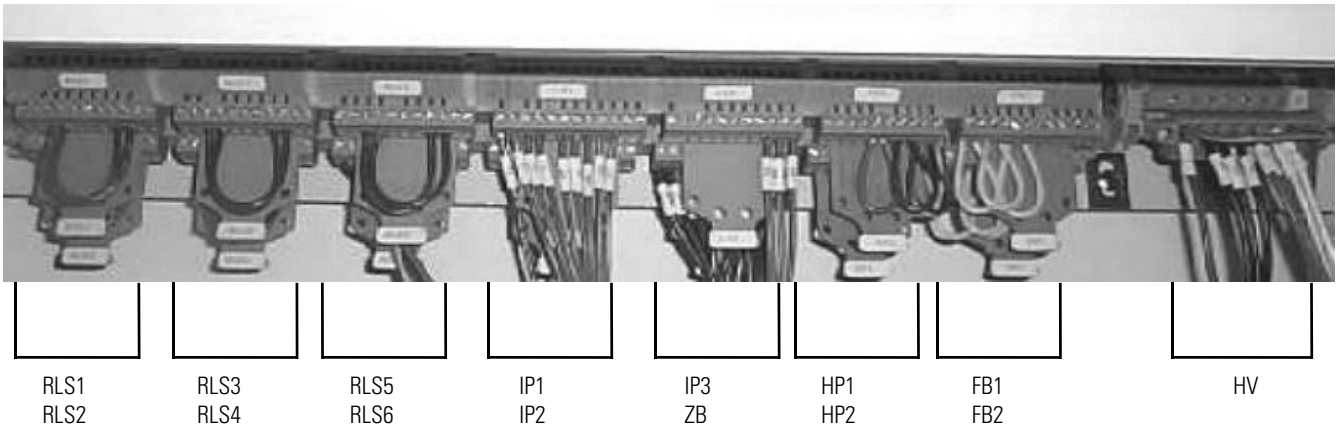

Figure 6.16
(23...85 A) Control Module Connector Plugs

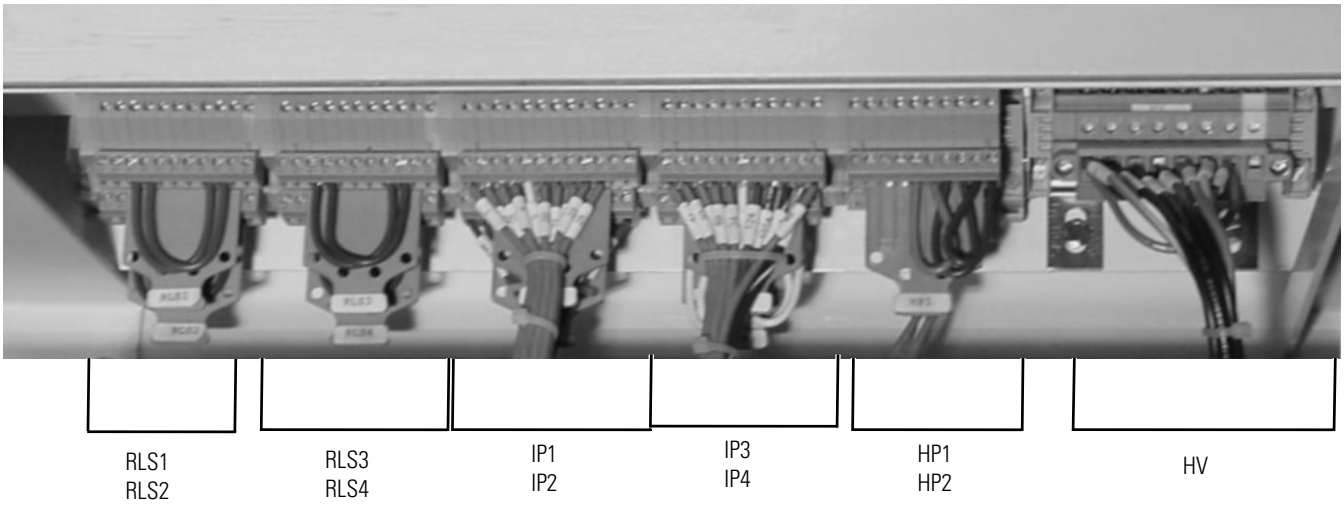

3. Loosen the two screws holding the HV connector, and remove the connector by pulling it away from the Control Module (see Figure 6.17).

Figure 6.17
HV Connector Plug Removal

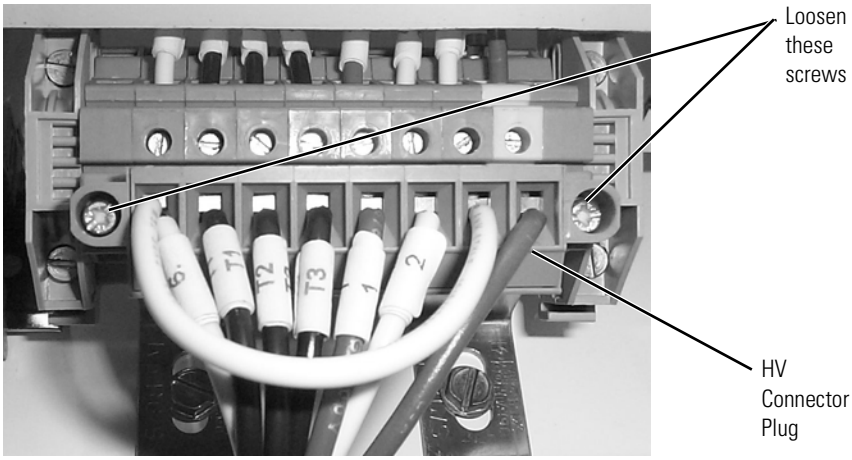

ATTENTION

In order to help avoid serious injury or death, proper lifting techniques and equipment must be used when moving and installing the ElectroGuard®. The lifting means must be capable of lifting the weight of the panel.

ATTENTION

The Control Module for the 25...85 A weighs 72 lbs (32.6 kg), and the 110...1200 A Control Module weighs 85 lbs (39.7 kg). The lifting means (hoist or fork truck) must be certified to lift the weight of the panel.

The module must be secured so that unexpected movement will not occur.

4. Remove and set aside the lower two bolts that secure the lower portion of the Control Module to the mounting plate (see Figure 6.18).

Figure 6.18
Removing the Bottom Two Mounting Bolts that Secure the Control Module

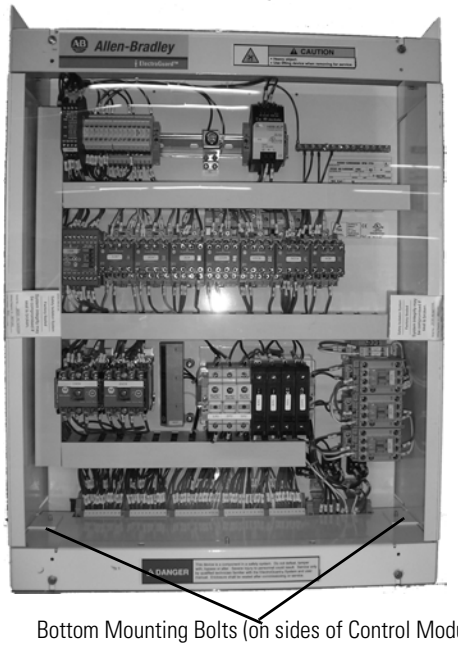

5. If a hoist will be used to remove the Control Module, fasten the lifting chain to the two side lifting ears (see Figure 6.19).

Figure 6.19
Side Lifting Ears on Control Module

6. Remove the top two bolts that secure the Control Module to the mounting plate (see Figure 6.20).

Figure 6.20
Removing the Top Two Mounting Bolts that Secure the Control Module

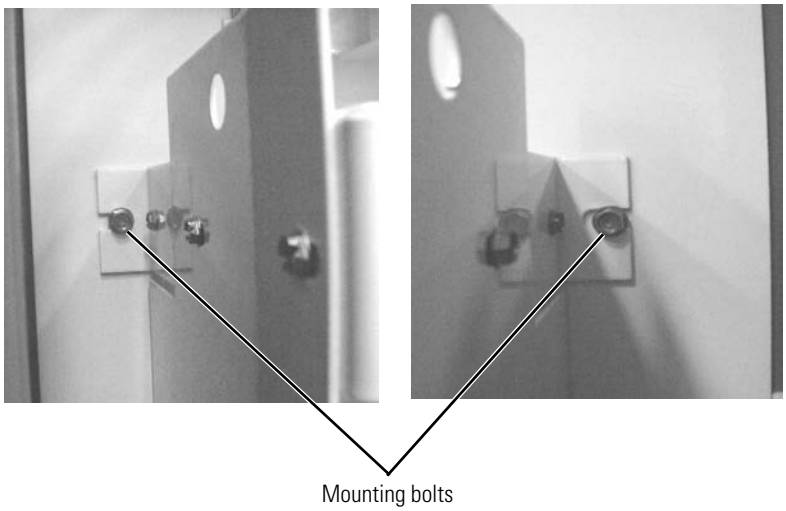

7. Carefully lift and remove the Control Module.

Installation

ATTENTION

In order to help avoid serious injury or death, proper lifting techniques and equipment must be used when moving and installing the ElectroGuard®. The lifting means must be capable of lifting the weight of the panel.

ATTENTION

The Control Module for the 25...83 A weighs 72 lbs (32.6 kg), and the 110...1200 A Control Module weighs 85 lbs (39.7 kg). The lifting means (hoist or fork truck) must be certified to lift the weight of the panel.

The module must be secured so that unexpected movement will not occur.

1. With the lifting means attached to the replacement Control Module, position the module on the two support brackets located near the bottom of the enclosure (see Figure 6.21).

Figure 6.21
Control Module Bottom Mounting Bolts

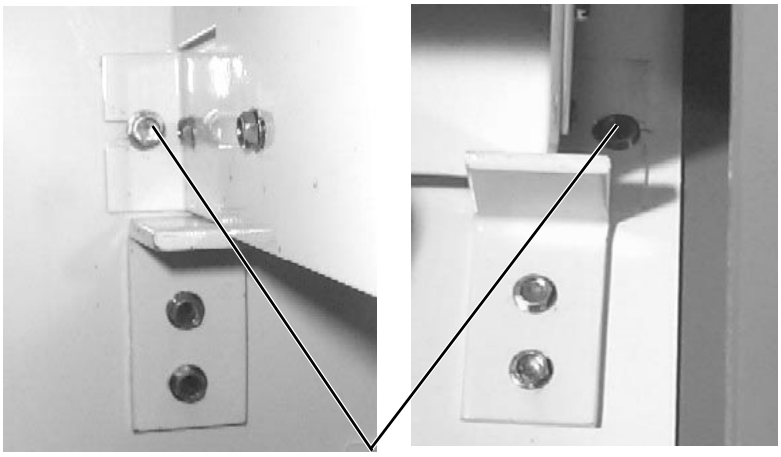

2. Insert the two right-hand Control Module mounting bolts and rotate several turns, but do not tighten.

3. Slide the Control Module to the right against the two mounting bolts.

4. Install the two left-hand Control Module mounting bolts.

5. Tighten all four Control Module mounting bolts to 50…60 lb-in. (5.6…6.8 N•m).

IMPORTANT Refer to the corresponding connection diagram supplied with the Control Module.

Note: The RLS connectors as well as HP1, HP2, IP1, IP2, IP3, and IP4 (23…85 A only) or HP1, HP2, IP1, IP2, IP3, ZB, FB1, and FB2 (110…1200 A only) are keyed. If a connector does not re-connect easily, make sure it is installed in the proper position. These connectors are keyed.

6. Re-install connector HV. Press the connector firmly into place and secure by tightening the two screws located at the ends of the connector (see Figure 6.27).

IMPORTANT On ElectroGuard® in the 110…1200 A size, where the Control Module is being replaced, if the Control Modules (2030-CH1200X) are different series, some wiring changes must be made to the Power panel for compatibility. If these changes are not made, the ElectroGuard® will not function.

When installing a replacement 110…1200 A Control Module (2030-CH1200X), check the series letter of the Control Module (Catalog

number and Series information can be found on the main label of the Control Module (inside the Control Module enclosure, top, right side) or on the inside of the door of the Power Panel). If they do not match, complete the correct rewiring described below. Once complete, make a note of the wiring change in the ElectroGuard® Service Log.

Series A Control Module Replacing a Series B Control Module

1. Re-label wire #107A from 1IC (21) to ZB(3) as wire #103. (See Figure 6.22)

Figure 6.22 Series A ZB Plug

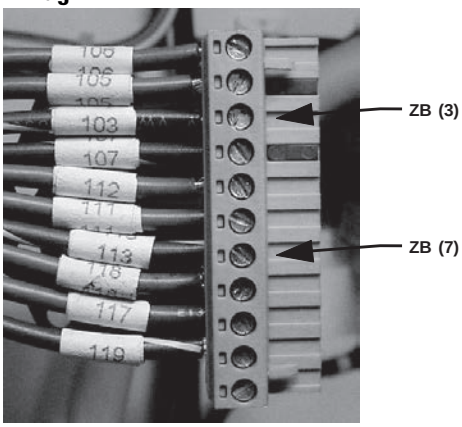

2. Disconnect wire #119A from ZB(7) to GC(21). (See Figure 6.23)

Figure 6.23 Series B ZB Plug

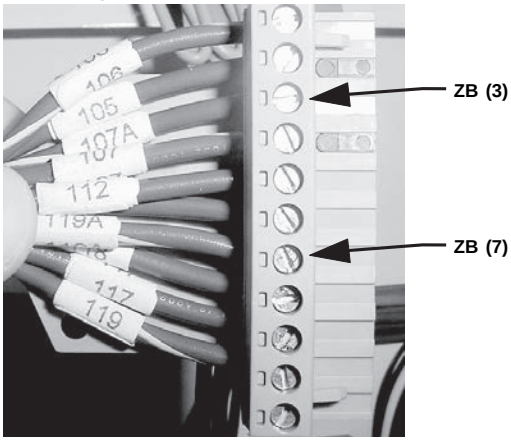

3. Disconnect wire #113A from IP3(7) to 2IC(22). (See Figure 6.24)

Figure 6.24 Series B 2IC Connections

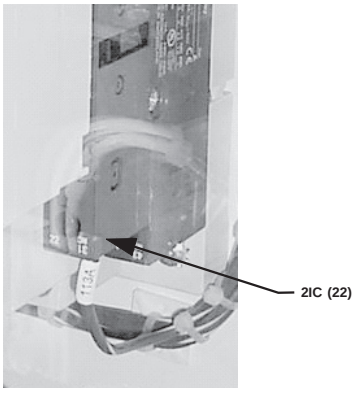

4. Disconnect wire #113 from IP3(8) and connect to ZB(7). (See Figure 6.22)

5. Install wire #103 from 1IC (21) to GC (21). (See Figures 6.25 and 6.26)

Figure 6.25 SIS Series A Contactor Connections

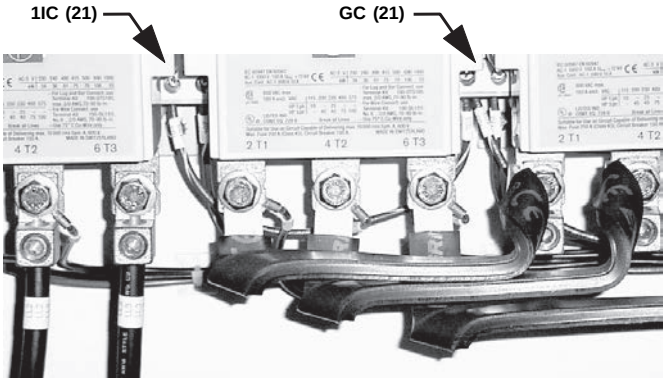

6. Install wire #103 from GC (21) to 2IC (22). (See Figures 6.25 and 6.26)

Figure 6.26 Series A 2IC Connections

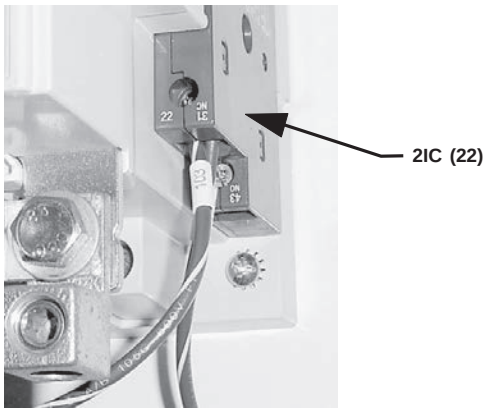

Series B Control Module Replacing a Series A Control Module

1. Re-label wire #103 from 1IC (21) to ZB(3) as wire #107A. (See Figure 6.23)
2. Disconnect wire #103 from 1IC (21) to GC (21). (See Figure 6.25)
3. Disconnect wire #103 from GC (21) to 2IC (22). (See Figures 6.25 and 6.26)
4. Disconnect wire #113 from ZB(7) and connect to IP3(8). (See Figure 6.22)
5. Install wire #113A from IP3(7) to 2IC(22). (See Figure 6.24)
6. Install wire #119A from ZB(7) to GC(21). (See Figure 6.23)

Figure 6.27
Re-Installing the HV Connector Plug

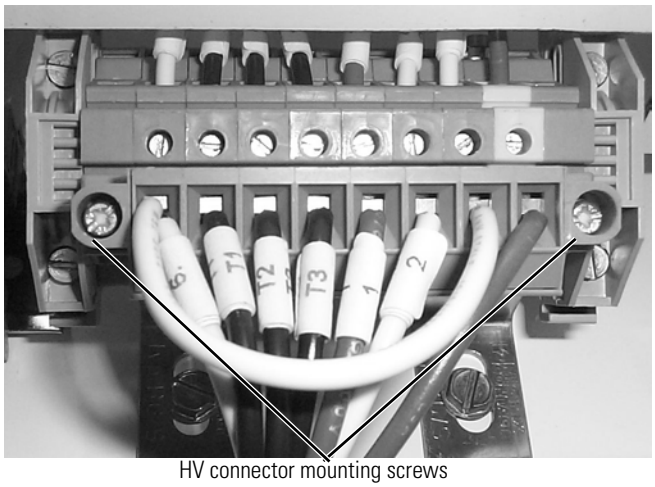

7. Re-install the connector plugs in the following order: RLS2, RLS1, RLS4, RLS3, IP2, IP1, IP4/ZB, IP3, HP2, HP, FB2, and FB1. Press the plugs firmly into place (see Figure 6.28 and 6.29).

Figure 6.28
(110...1200 A) Connector Plugs in the Control Module

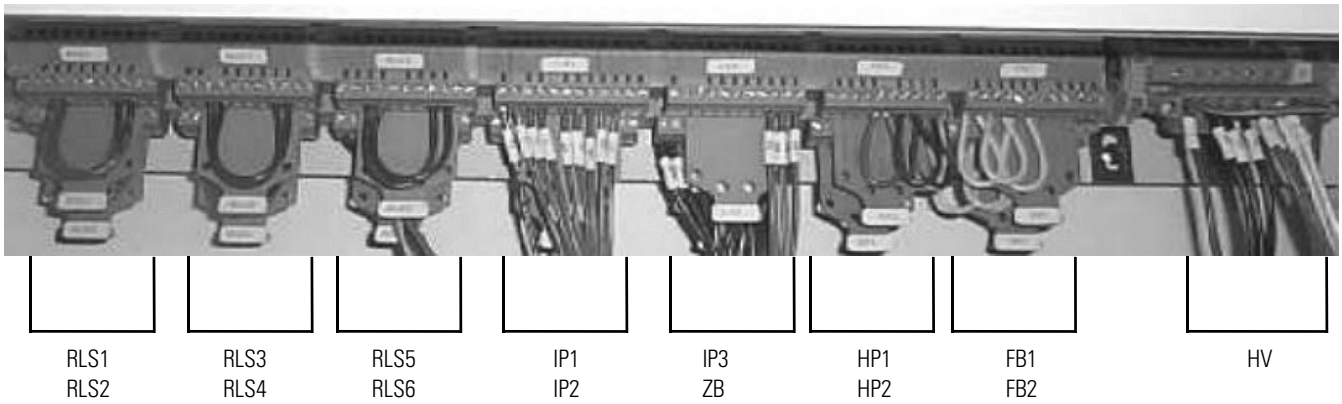

Figure 6.29
(23...85 A) Connector Plugs in the Control Module

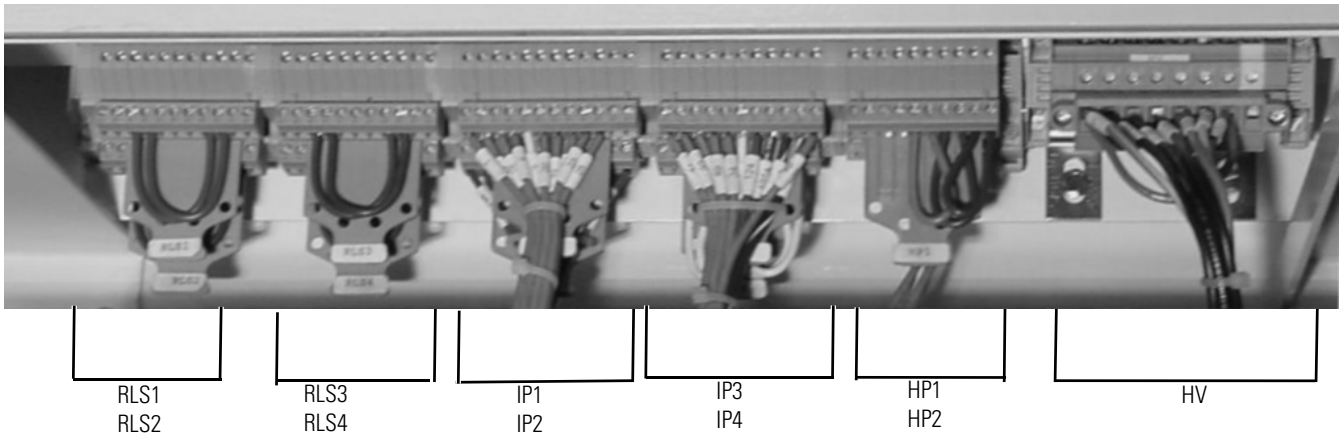

8. Close the ElectroGuard® Power Panel door and secure the cover fasteners.

Power Restoration

1. If pneumatic energy was isolated, remove the padlock from the pneumatic energy isolating device. Turn the pneumatic energy ON.
2. Remove the padlock from the branch circuit protection on the ElectroGuard® Power Panel or the upstream customer-supplied branch circuit protection feeding electrical energy to the SIS. Move the branch circuit protection operating handle to the ON position.
3. If the SIS includes the Communication Module, remove the padlock from the source feeding electrical energy to the module and restore the supply voltage.
4. Press the “System On” push button.
5. Perform recommissioning of the system.
6. Follow the proper start-up procedures to restart the machine.

Power Contactor and/or Mechanical Interlock (23…85 A)

ATTENTION

Hazardous voltage or other forms of energy could be present. To avoid serious injury or death:

Prior to beginning the installation and wiring process, make sure that all forms of energy to the installation site have been properly turned OFF and locked out.

ATTENTION

ElectroGuard® system modules are factory sealed with a tamper-indicating seal. Altering, defeating, or bypassing any module or component of the Safety Isolation System may result in personal injury, death, property damage, or economic loss. Only qualified service technicians must perform service or maintenance. Resealing of the modules is the responsibility of the person or organization performing the service or maintenance.

ATTENTION

Only qualified service technicians familiar with the ElectroGuard® and associated machinery should plan or implement the installation, commissioning, and subsequent maintenance of the system. Failure to do this may result in personal injury and/or equipment damage.

ATTENTION

The ElectroGuard® is not designed to provide the start and stop functions for the machine or process. The proper starting and stopping means of the machine or process must be used.

Removal

1. Open the ElectroGuard® Power Panel door by loosening the cover hold-down fasteners.

IMPORTANT The power contactors are mechanically interlocked. The three contactors must be removed as an assembly. Once removed from the enclosure, the entire contactor assembly can be replaced or individual contactors can be removed from the assembly and replaced.

2. Loosen and remove the mounting screws that hold the power contactor shield to the equipment mounting plate and remove the shield (see Figure 6.30).

Figure 6.30
Removing the Power Contactor Protective Shield

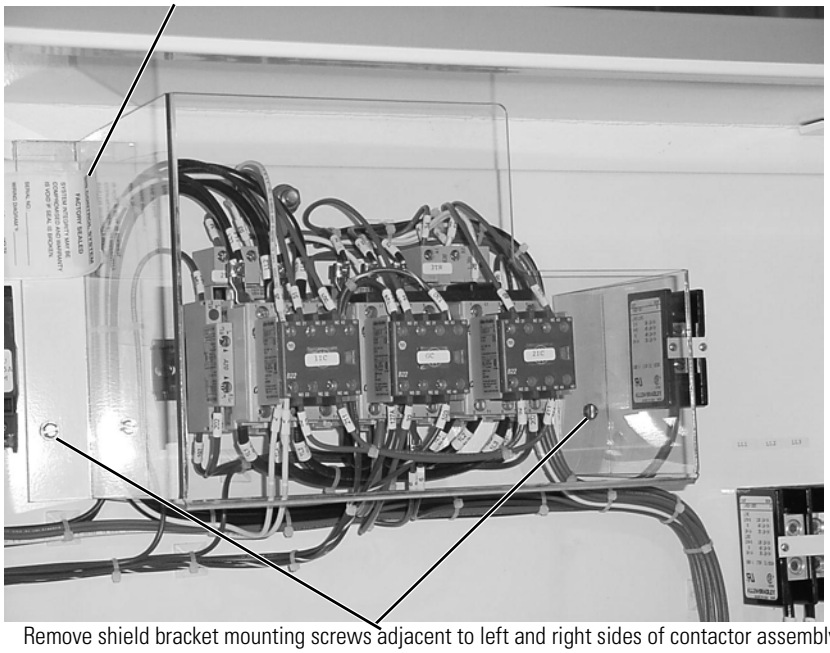

3. Loosen and remove the three power conductors connected to the line side of Contactor 1IC, the three power conductors connected to the load side of Contactor 2IC feeding the machine, and the conductor connected to the GC side of the isolated ground conductor (see Figure 6.31).

Figure 6.31
Power Wire Removal from Power Contactor Assembly

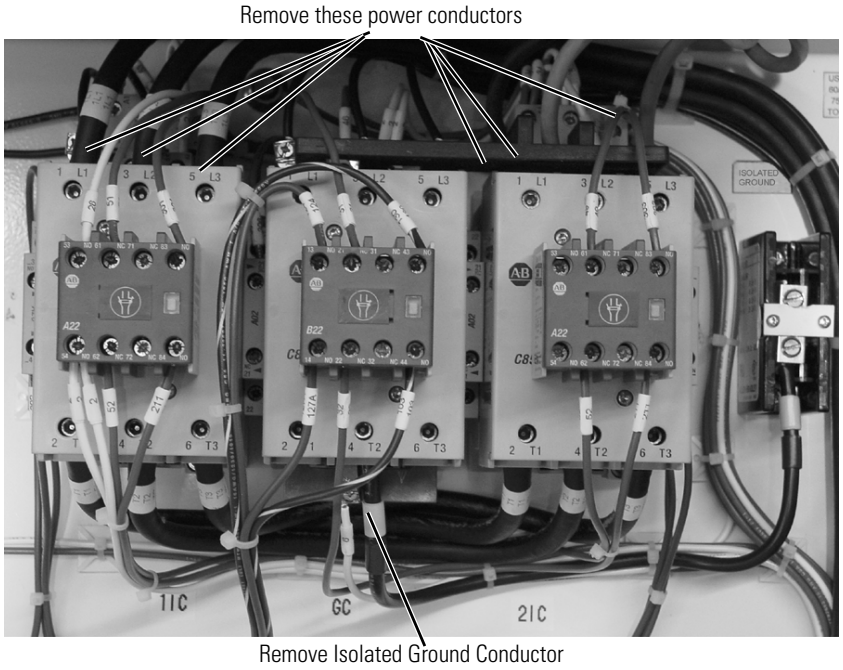

4. Remove control wiring from the power contactor assembly.

5. Remove the power contactor assembly from the DIN Rail.

   Note: The power contactor assembly weighs approximately 12 lbs. (5.4 kg)

6. Once the contactor assembly has been removed from the DIN Rail, disassemble the contactor assembly to replace the faulty contactor(s) by removing the following components:
   - Control and power wiring from contactor assembly
   - Shorting bar when replacing GC or 2IC (see Figure 6.32).

Figure 6.32

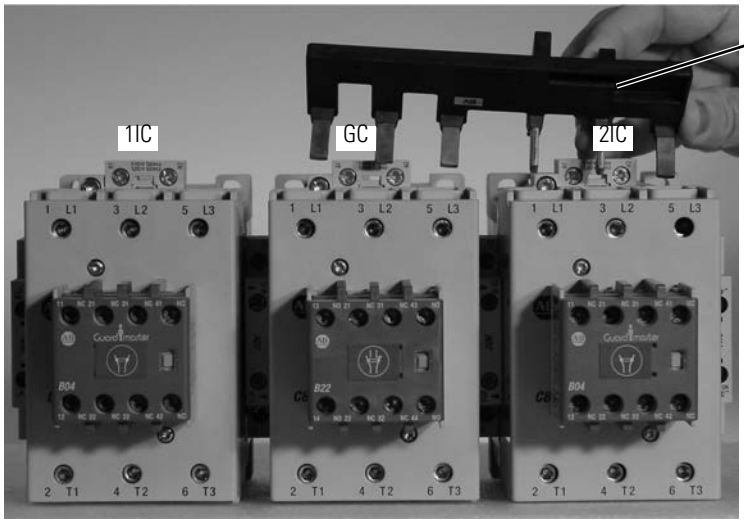

Figure 6.33
Dovetail Connectors

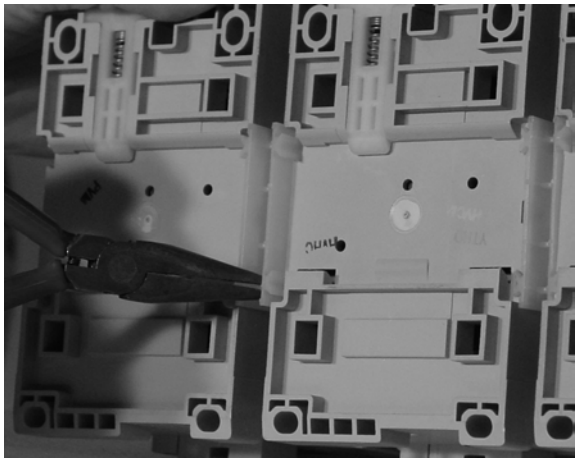

Figure 6.34
Mechanical Interlock

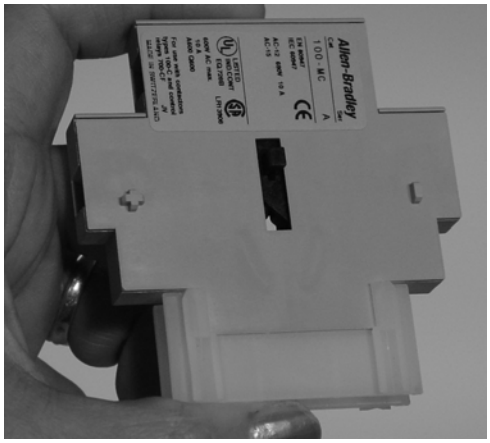

Installation

Installing 1IC Isolation Contactor

Re-install the 1IC power contactor by assembling the following components:

1. Install auxiliary contactor block to 1IC (see Figure 6.35).

Figure 6.35
Auxiliary Contactor Block

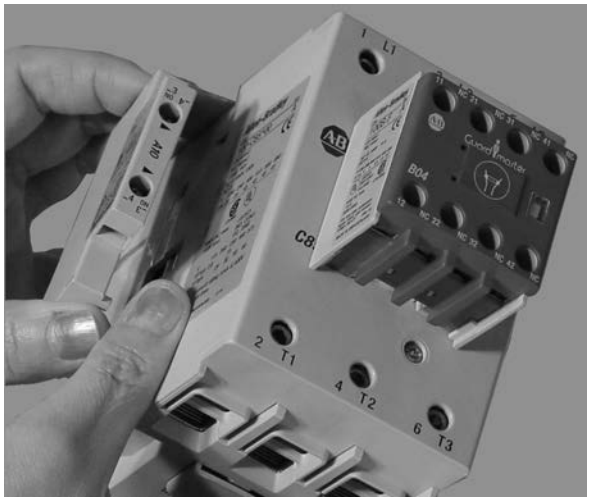

2. Install mechanical interlock between 1IC and GC and mount 1IC to GC (see Figure 6.36)

Figure 6.36
Mechanical Interlock

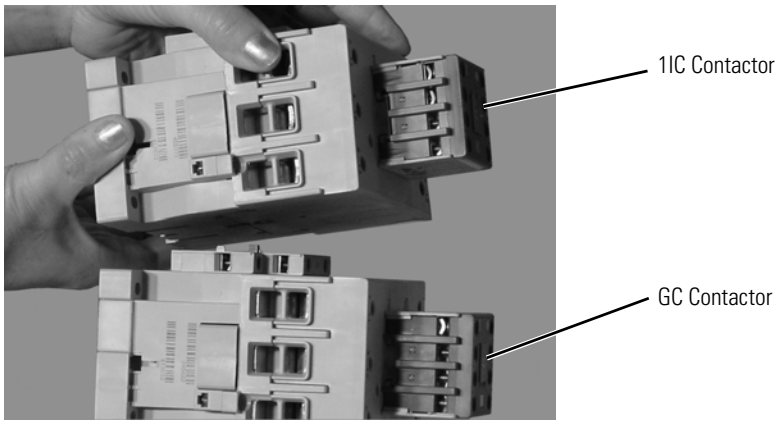

3. Install dovetail (see Figure 6.37).

Figure 6.37

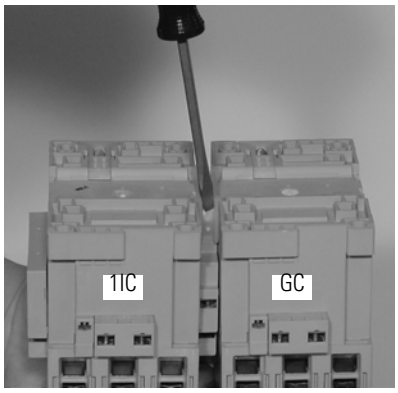

4. Align the contactor assembly on the DIN Rail and snap into place.
5. Reconnect the power and control conductors per the corresponding connection diagram.
6. Re-install the power contactor shield to the equipment mounting plate.
7. Place a tamper-indicating seal on contactor shield.

Installing 2IC Isolation Contactor

Re-install the 2IC power contactor by assembling the following components:

1. Install auxiliary contact block to 2IC (see Figure 6.38).

Figure 6.38
Auxiliary Contact Block

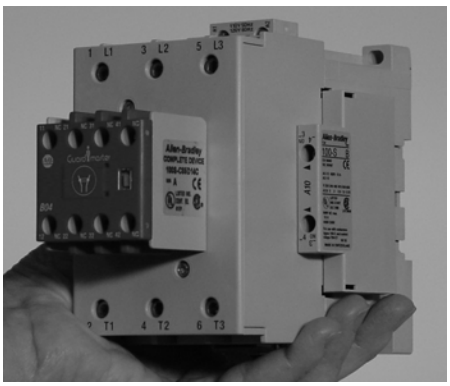

2. Install mechanical interlock between 2IC and GC and mount 2IC to GC (see Figure 6.39).

Figure 6.39
Mechanical Interlock

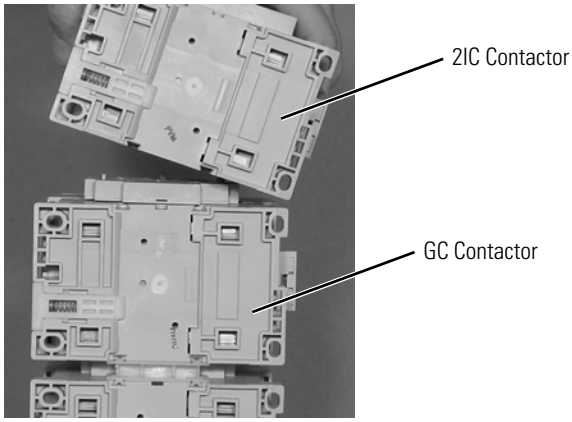

3. Install dovetail.

Figure 6.40

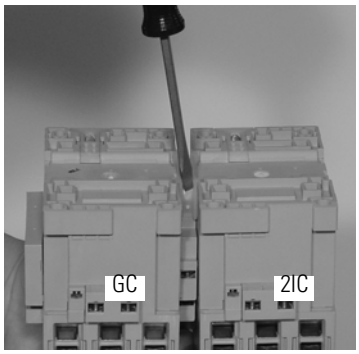

4. Install shorting bar.

Figure 6.41

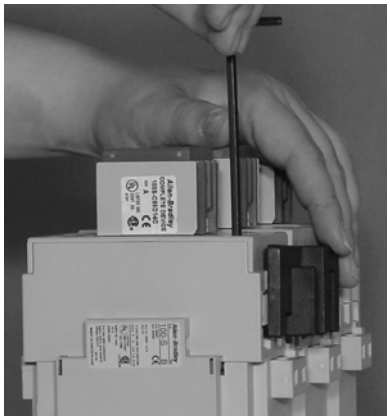
Allen-Bradley
Bulletin 100-C
Contactor
100-C23EJ10
Series A
Ser. A
Cat. No.
Ser. No.
Coil
Volts
Hertz
Phase
Amps
Max. Ratings
Max. Rating
Max. Rating
Max. Rating

3. Install shorting bar (see Figure 6.42).

Figure 6.42

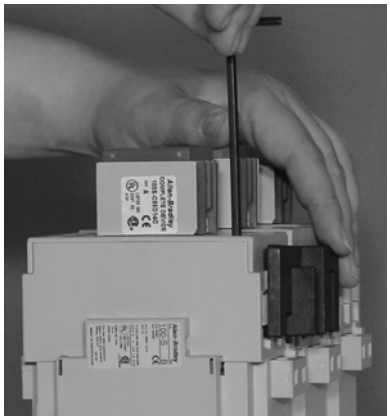

4. Align the contactor assembly on the DIN Rail and snap into place.

5. Reconnect the power and control conductors per the corresponding connection diagram.

6. Reinstall the power contactor shield to the equipment mounting plate.

7. Place a tamper-indicating seal on shield.

Power Restoration

1. Remove the padlock from the disconnecting means on the ElectroGuard® Power Panel or the upstream customer supplied disconnecting means feeding electrical energy to the Safety Isolation System.

2. If the Safety Isolation System includes the Communication Module, remove the padlock from the source feeding electrical energy to these modules, and restore the supply voltage.

3. Turn the disconnecting means operating handle to the ON position.

4. Turn the operating handle on the Remote Lockout Station to the ON position.

5. Press the “SYSTEM ON” push button.

6. Perform recommissioning of the system.

7. Follow the normal start-up procedures to restart the machine.

Power Contactor and/or Mechanical Interlock (110…1200 A)

ATTENTION

Hazardous voltage or other forms of energy could be present. To avoid serious injury or death:

Prior to beginning the installation and wiring process, make sure that all forms of energy to the installation site have been properly turned OFF and locked out.

ATTENTION

ElectroGuard® system modules are factory sealed with a tamper-indicating seal. Altering, defeating, or bypassing any module or component of the Safety Isolation System may result in personal injury, death, property damage, or economic loss. Only qualified service technicians must perform service or maintenance. Resealing of the modules is the responsibility of the person or organization performing the service or maintenance.

ATTENTION

Only qualified service technicians familiar with the ElectroGuard® and associated machinery should plan or implement the installation, commissioning, and subsequent maintenance of the system. Failure to do this may result in personal injury and/or equipment damage.

ATTENTION

The ElectroGuard® is not designed to provide the start and stop functions for the machine or process. The proper starting and stopping means of the machine or process must be used.

Removal

IMPORTANT

In 110…1200 A ElectroGuard® Power Panels, the power contactors must be removed individually for replacement. To replace the mechanical interlock between contactors 1IC and GC, contactor 1IC must be removed first. To replace the mechanical interlock between contactors 2IC and GC, contactor 2IC must be removed. To replace contactor GC, first remove any attachment hardware for both mechanical interlocks mounted on the contactors and then remove power isolation contactor 1IC.

1. Determine which power contactor or mechanical interlock is being replaced, and disconnect all required power wires attached to the contactor to allow its removal. If contactor GC is being replaced, remove the shorting bar and install it on the replacement contactor.

2. Remove all of the control wiring from the contactor and/or mechanical interlock being removed.

ATTENTION

Contactor weight depends on the ElectroGuard® amperage rating. Approximate weight of a single contactor can be as low as 8.5 lbs (3.8 kg) up to as high as 118 lbs (53.1 kg). In order to prevent physical injury to personnel and/or equipment damage, customer must make provisions as needed to support the heavier contactors prior to and during the replacement process.

3. Remove the two lower contactor mounting screws or bolts first (see Figure 6.43).

Figure 6.43

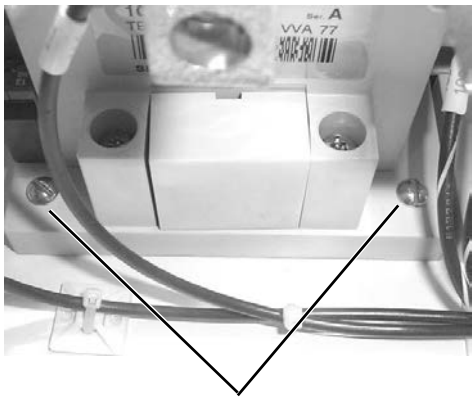

Lower mounting screws or bolts

4. Support the contactor and then remove the two upper contactor mounting screws or bolts (see Figure 6.44) and remove the contactor from the enclosure.

Figure 6.44

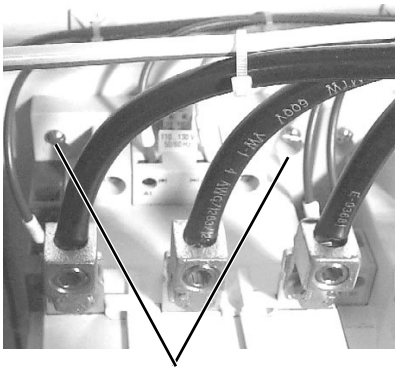

Upper mounting screws or bolts

5. Remove the mechanical interlock if replacement is required (see Figure 6.45).

Figure 6.45

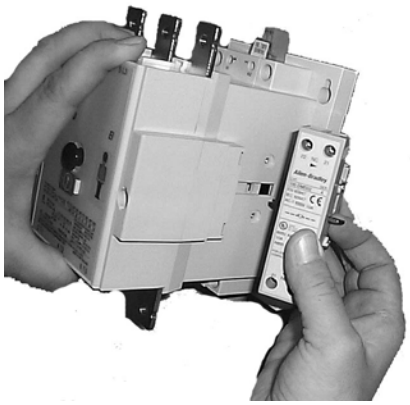

6. Install replacement mechanical interlock(s) according to the instruction sheet supplied with the replacement part.

7. Align the replacement contactor with the mounting holes in the equipment mounting plate and insert the mounting bolts. Tighten bolts to the torque listed on the replacement contactor instruction sheet.

IMPORTANT Reference the corresponding connection diagram supplied with the ElectroGuard® Power Panel.

8. Reconnect all control wires to the power contactor or mechanical interlock that was removed during maintenance.

9. Reconnect all power conductors to the power contactor that was removed during maintenance.

10. If contactor GC was replaced, reconnect the Isolated Ground Conductor to the shorting bar mounted on contactor GC.

11. Re-install the power contactor shield and install a new tamper-indicating seal to reseal the shield.

Power Restoration

1. Remove the padlock from the disconnecting means on the ElectroGuard® Power Panel or the upstream customer supplied disconnecting means feeding electrical energy to the Safety Isolation System.

2. If the Safety Isolation System includes the Communication Module, remove the padlock from the source feeding electrical energy to these modules, and restore the supply voltage.

3. Turn the disconnecting means operating handle to the ON position.

4. Turn the operating handle on the Remote Lockout Station to the ON position.

5. Press the “SYSTEM ON” push button.

6. Perform recommissioning of the system.

7. Follow the proper start-up procedures to restart the machine.

Control Circuit Transformer

ATTENTION

Hazardous voltage or other forms of energy could be present. To avoid serious injury or death:

Prior to beginning the installation and wiring process, make sure that all forms of energy to the installation site have been properly turned OFF and locked out.

ATTENTION

ElectroGuard® system modules are factory sealed with a tamper-indicating seal. Altering, defeating, or bypassing any module or component of the Safety Isolation System may result in personal injury, death, property damage, or economic loss. Only qualified service technicians must perform service or maintenance. Resealing of the modules is the responsibility of the person or organization performing the service or maintenance.

ATTENTION

Only qualified service technicians familiar with the ElectroGuard® and associated machinery should plan or implement the installation, commissioning, and subsequent maintenance of the system. Failure to do this may result in personal injury and/or equipment damage.

ATTENTION

The ElectroGuard® is not designed to provide the start and stop functions for the machine or process. The proper starting and stopping means of the machine or process must be used.

Removal

1. Open the ElectroGuard® Power Panel door by loosening the cover hold-down fasteners (see Figure 2.21 and 2.22).

2. If the Safety Isolation System includes the Communication Module, de-energize and padlock the electrical energy feeding these modules.

3. Open the two primary fuse holders adjacent to the Control Circuit Transformer by pulling the fuse covers downward (see Figures 6.46 and 6.47).

Figure 6.46
(23…85 A) Control Circuit Transformer and Primary Fusing

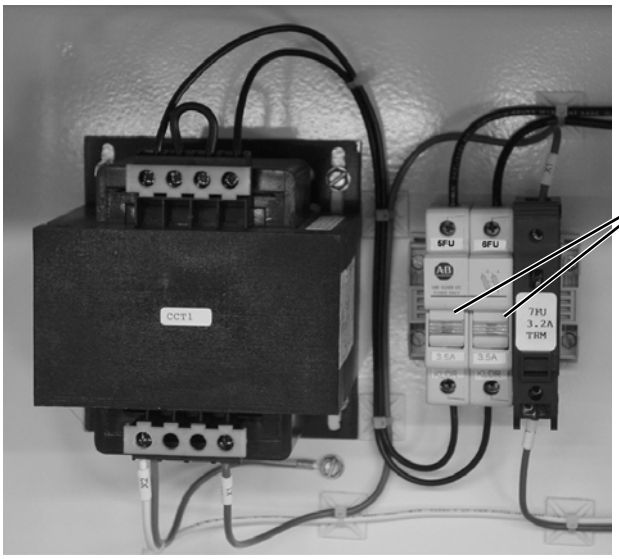

Figure 6.47
(110…1200 A) Control Transformer

4. Remove the wires from the primary and secondary sides of the Control Circuit Transformer. Loosen and remove the four control transformer mounting screws (see Figure 6.48 and 6.49).

Figure 6.48
(110…1200 A) Control Circuit Transformer Mounting

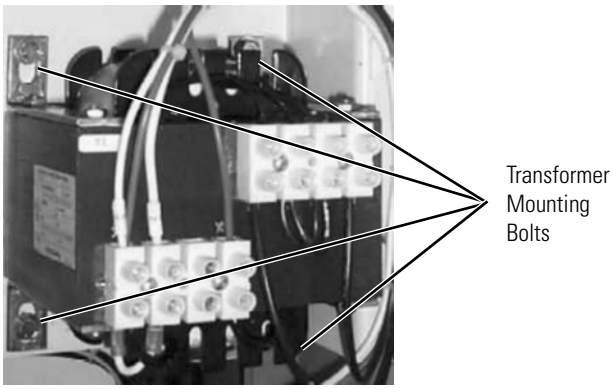

Figure 6.49
(23…85 A) Control Circuit Transformer Mounting

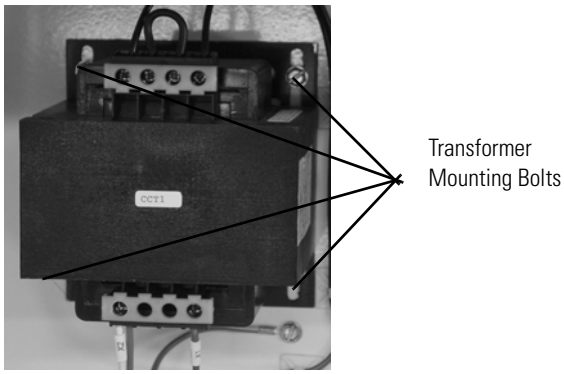

5. Remove the Control Circuit Transformer.

Installation

1. Line-up the four mounting holes on the replacement Control Circuit Transformer with the holes in the equipment mounting plate. Install the four mounting screws and torque to 50…60 lb-in. (5.6…6.8 N•m).

IMPORTANT Refer to the corresponding connection diagrams supplied with the ElectroGuard® Power Panel.

2. Reconnect the primary and secondary wiring to the Control Circuit Transformer. Torque wire connections as specified inside of SIS door.

Figure 6.50
Control Circuit Transformer Wiring

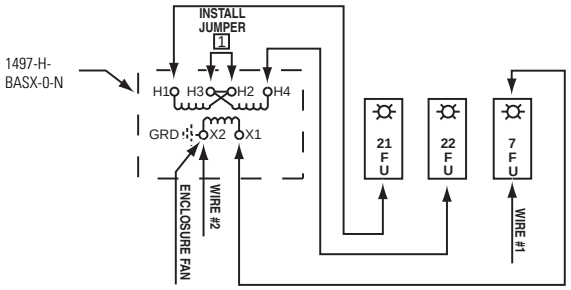

Transformer shown connected for 480V primary / 120V secondary. For other primary voltages see chart:

Primary		Secondary
H1-H4	**H1-H4**	**X1-X2**
220 (50 Hz) 240 (60 Hz) Jumper H1-H3 H2-H4	440 (50 Hz) 480 (60 Hz) Jumper H2-H3	110 (50 Hz) 120 (60 Hz)

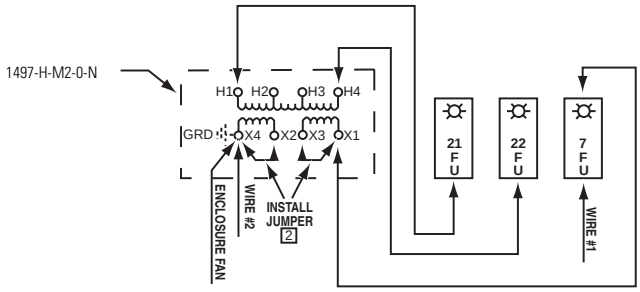

Transformer shown connected for 415V primary / 115V secondary. For other primary voltages see chart:

Primary			Secondary
H1-H4	**H1-H3**	**H1-H2**	**X1-X4**
415 (50 Hz)	400 (50 Hz)	380 (50 Hz)	115 Jumper X1-X3 X2-X4

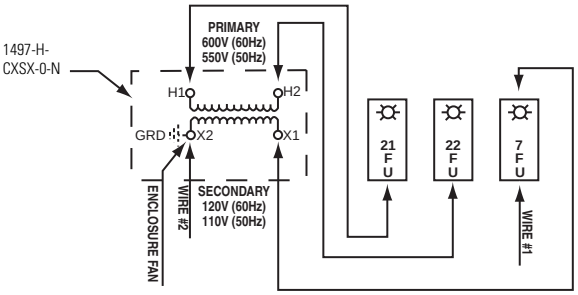

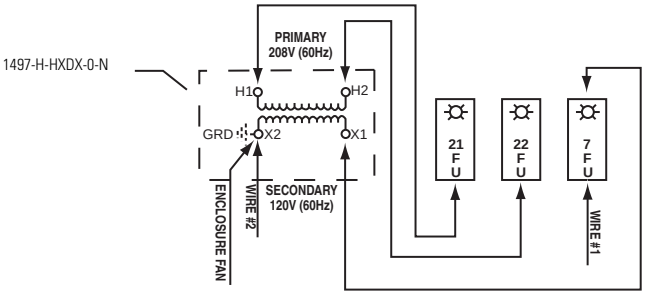

3. Replace the voltage selection jumper on the primary of the transformer. See nameplate and transformer documentation for selection and setting up primary of the transformer for system voltage.

4. Close the primary fuse holder covers.

Push Buttons/Pilot Lights

ATTENTION

Hazardous voltage or other forms of energy could be present. To avoid serious injury or death:

Prior to beginning the installation and wiring process, make sure that all forms of energy to the installation site have been properly turned OFF and locked out.

ATTENTION

ElectroGuard® system modules are factory sealed with a tamper-indicating seal. Altering, defeating, or bypassing any module or component of the Safety Isolation System may result in personal injury, death, property damage, or economic loss. Only qualified service technicians must perform service or maintenance. Resealing of the modules is the responsibility of the person or organization performing the service or maintenance.

ATTENTION

Only qualified service technicians familiar with the ElectroGuard® and associated machinery should plan or implement the installation, commissioning, and subsequent maintenance of the system. Failure to do this may result in personal injury and/or equipment damage.

ATTENTION

The ElectroGuard® is not designed to provide the start and stop functions for the machine or process. The proper starting and stopping means of the machine or process must be used.

Removal

1. Open the ElectroGuard® Power Panel enclosure door by loosening the cover hold-down fasteners.
2. Remove the finger-safe cover(s) from the wiring terminals of the push button or pilot light (see Figures 6.51 and 6.52).

Figure 6.51
Removing the Finger-Safe Cover. Step a: Pry up the Cover

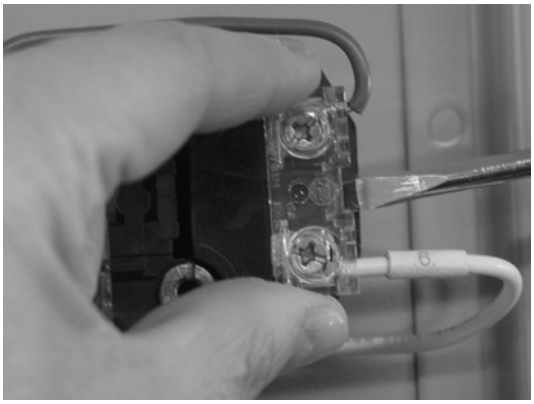

Figure 6.52
Removing the Finger-Safe Cover. Step b: Remove the Cover

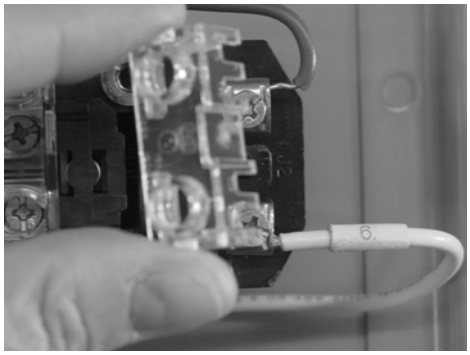

3. Remove the wiring from the back of the push button operator/pilot light to be replaced (see Figure 6.53).

Figure 6.53
Push Button/Pilot Light Replacement on Power Panel

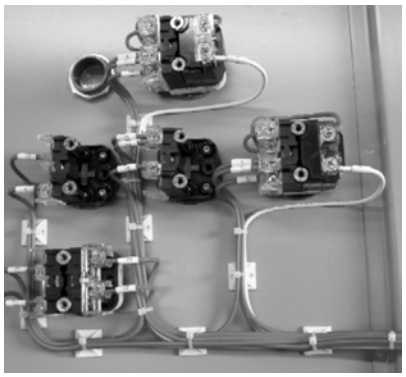

Inside View of
Enclosure Door

4. Using a wrench, loosen and remove the retaining ring on the front of the push button/pilot light by rotating the ring counter-clockwise (see Figure 6.54).

Figure 6.54
Push Button/Pilot Light

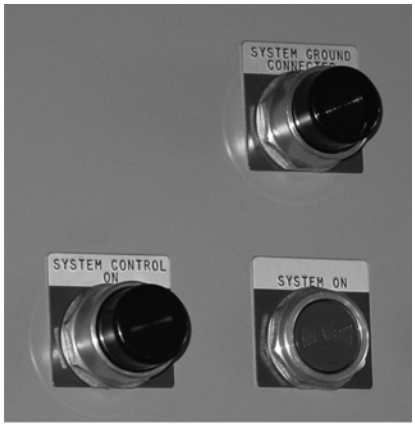

5. Remove the push button/pilot light from the rear (inside of enclosure door).

Installation

1. Insert the new push button/pilot light from the inside of the enclosure door. Place the nameplate and the retaining ring on the push button/pilot light from the outside of the enclosure door, and tighten the retaining ring by turning the ring clockwise with a wrench until secure.

IMPORTANT

Reference the corresponding connection diagram supplied with the ElectroGuard® Power Panel.

Reconnect the control wiring to the back of the push button/pilot light (see Figure 6.55).

Figure 6.55
Wiring to the ElectroGuard® Power Panel (110…1200 A — system wires shown in parentheses)

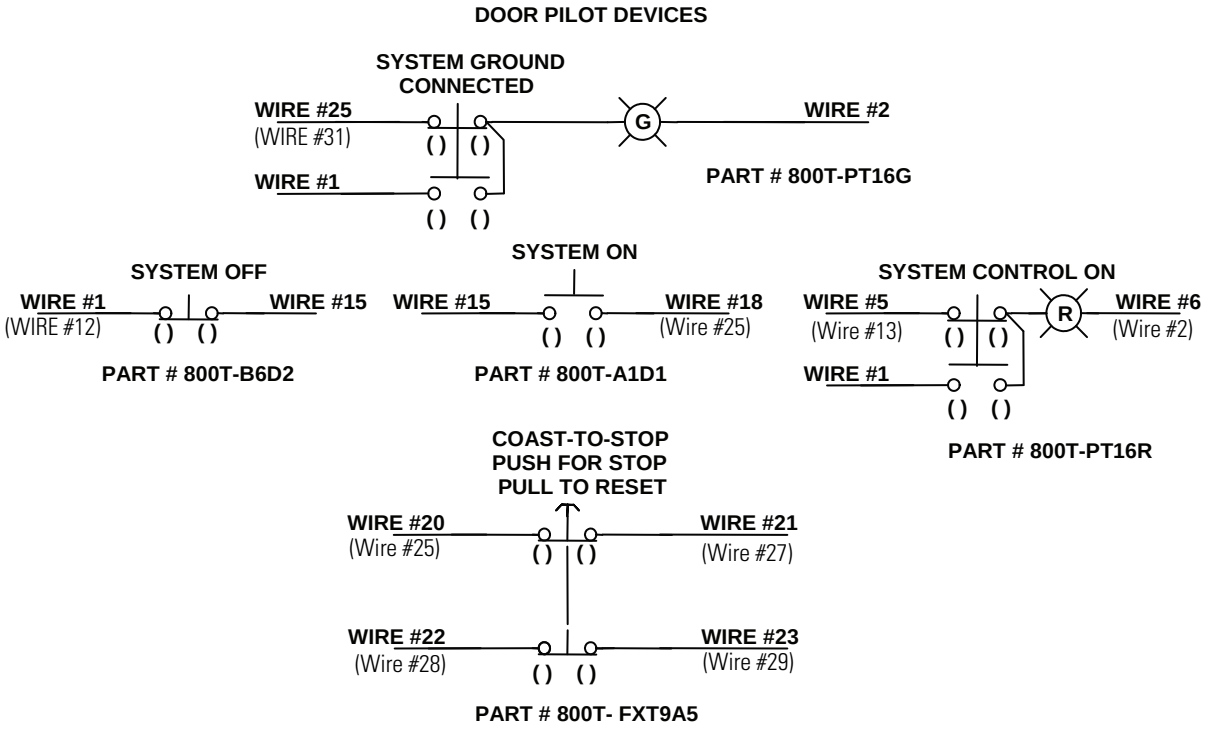

2. Re-install the finger-safe covers that were removed during maintenance.

3. Close the enclosure door and tighten the enclosure door fasteners.

Expansion Module

ATTENTION

Hazardous voltage or other forms of energy could be present. To avoid serious injury or death:

Prior to beginning the installation and wiring process, make sure that all forms of energy to the installation site have been properly turned OFF and locked out.

ATTENTION

ElectroGuard® system modules are factory sealed with a tamper-indicating seal. Altering, defeating, or bypassing any module or component of the Safety Isolation System may result in personal injury, death, property damage, or economic loss. Only qualified service technicians must perform service or maintenance. Resealing of the modules is the responsibility of the person or organization performing the service or maintenance.

ATTENTION

Only qualified service technicians familiar with the ElectroGuard® and associated machinery should plan or implement the installation, commissioning, and subsequent maintenance of the system. Failure to do this may result in personal injury and/or equipment damage.

ATTENTION

The ElectroGuard® is not designed to provide the start and stop functions for the machine or process. The proper starting and stopping means of the machine or process must be used.

ATTENTION

In order to help avoid serious injury or death, proper lifting techniques and equipment must be used when moving and installing the ElectroGuard®. The lifting means must be capable of lifting the weight of the panel.

Removal

1. Open the customer- or factory-supplied enclosure housing the Expansion Module.

2. Disconnect the following connector plugs from the terminal blocks located at the bottom of the Expansion Module by firmly gripping the strain relief pad (see Figures 6.56 and 6.57):
   - RLS_A…RLS_D for the 4-port Expansion Module
   - RLS_A…RLS_J for the 10-port Expansion Module
   - PLC1EXB and PLC2EXB
   - The EXB connector

Figure 6.56
Removing Connectors from the Expansion Module

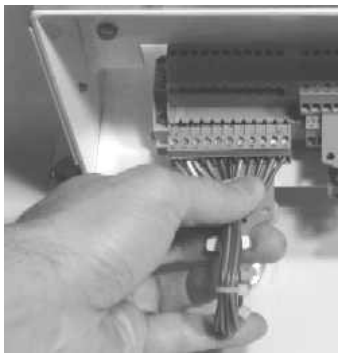

Figure 6.57
Expansion Module Connectors

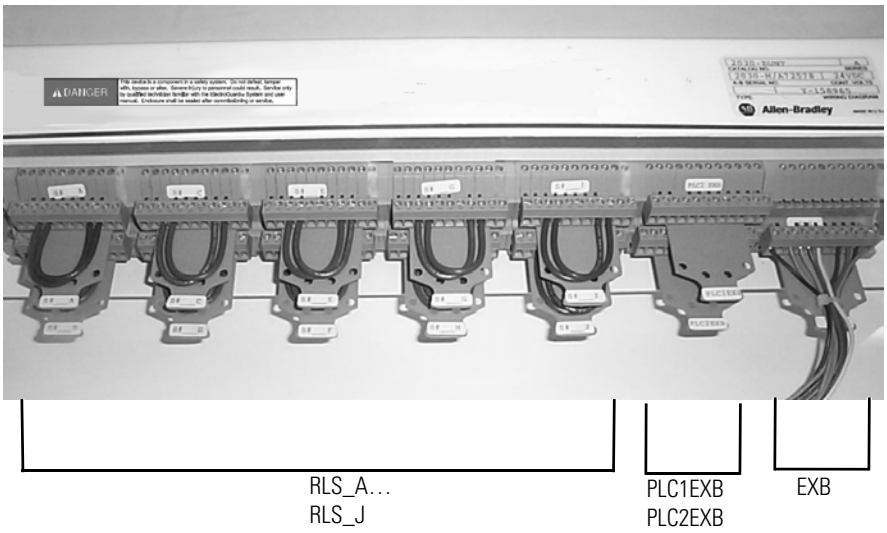

ATTENTION

The Expansion Module weighs approximately 25 lbs (11.3 kg). The lifting means (hoist or fork truck) must be certified to lift the weight of the panel.

The module must be secured so that unexpected movement will not occur.

3. Remove the four bolts securing the Expansion Module to the customer- or factory-supplied enclosure (see Figure 6.58).

Figure 6.58
Expansion Module Mounting Bolts

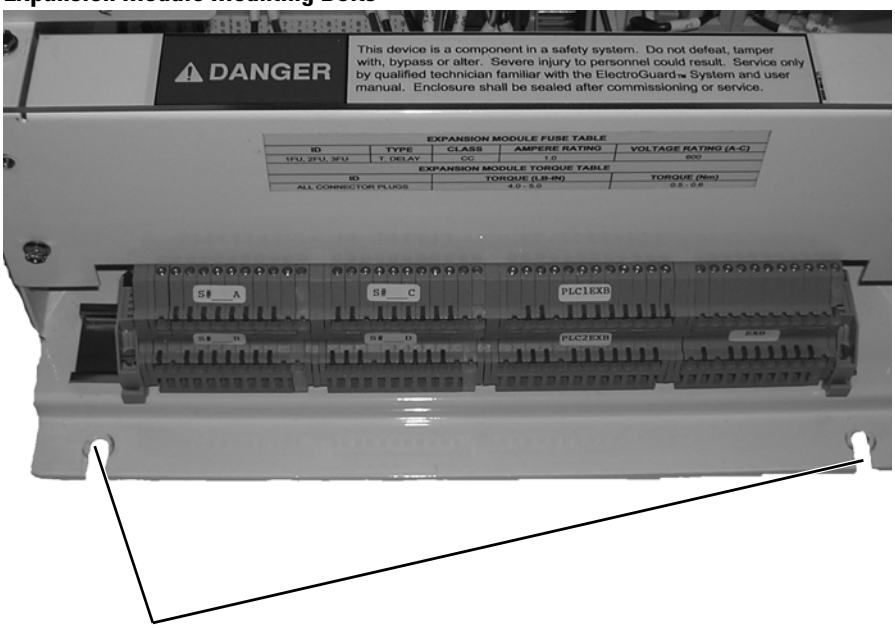

Bottom mounting bolts (also, two top mounting bolts [not shown])

Installation

1. With the lifting means secured to the replacement Expansion Module, position the module on the four mounting bolt holes in the enclosure.

2. Install the four mounting bolts and tighten to 50…60 lb-in. (5.6…6.8 N•m).

3. Re-install the connector plugs.

4. Close the enclosure door and secure the cover fasteners.

Power Restoration

1. If pneumatic energy was isolated, remove the padlock from the pneumatic energy isolating device. Turn the pneumatic energy ON.
2. Remove the padlock from the branch circuit protection on the ElectroGuard® Power Panel or the upstream customer-supplied branch circuit protection feeding electrical energy to the SIS. Move the branch circuit protection operating handle to the ON position.
3. If the SIS includes the Communication Module, remove the padlock from the source feeding electrical energy to the module and restore the supply voltage.
4. Press the "System On" push button.
5. Perform recommissioning of the system.
6. Follow the proper start-up procedures to restart the machine.

Communication Module

ATTENTION

Hazardous voltage or other forms of energy could be present. To avoid serious injury or death:

Prior to beginning the installation and wiring process, make sure that all forms of energy to the installation site have been properly turned OFF and locked out.

ATTENTION

ElectroGuard® system modules are factory sealed with a tamper-indicating seal. Altering, defeating, or bypassing any module or component of the Safety Isolation System may result in personal injury, death, property damage, or economic loss. Only qualified service technicians must perform service or maintenance. Resealing of the modules is the responsibility of the person or organization performing the service or maintenance.

ATTENTION

Only qualified service technicians familiar with the ElectroGuard® and associated machinery should plan or implement the installation, commissioning, and subsequent maintenance of the system. Failure to do this may result in personal injury and/or equipment damage.

Energy Lockout/Tagout

1. Press the System OFF push button on the front of the ElectroGuard® Power Panel.
2. Turn the branch circuit protection on the ElectroGuard® Power Panel, or the upstream customer-supplied branch circuit protection feeding electrical energy to the SIS OFF. Padlock the branch circuit protection handle in the OFF position.
3. If the machine has a source of pneumatic energy, shut off the air valve supplying the pneumatic energy to the machine and padlock it in the OFF position. (The pneumatic energy lockout valve must be located upstream of the Pneumatic Isolation Module.)
4. If the SIS includes the Communication Module, open the ElectroGuard® Power Panel enclosure and de-energize and padlock the electrical energy feeding the module.
5. If it is not already OFF, turn the operating handle on the RLS to the OFF position.

Removal and Installation

1. Open the ElectroGuard® Power Panel enclosure door by loosening the cover hold-down fasteners. See Figure 2.21 (23…85 A) and Figure 2.22 (110…1200 A).
2. Remove the control wiring from the module to be replaced.
3. Refer to the applicable Communication Module installation instructions in the documentation folder.

IMPORTANT Refer to the corresponding connection diagrams supplied with the ElectroGuard® Power Panel.

4. Reconnect the control wiring to the Communication Module.
5. Close the enclosure door and tighten the enclosure door fasteners.

Power Restoration

1. Remove the padlock from the branch circuit protection on the ElectroGuard® Power Panel or the upstream customer-supplied branch circuit protection feeding electrical energy to the SIS.
2. Turn the branch circuit protection operating handle to the ON position.
3. Remove the padlock from the source feeding electrical energy to the Communication Module and restore the supply voltage.
4. Press the System ON push button.
5. Follow proper start-up procedures to restart the machine or process.

Pneumatic Isolation Module

ATTENTION

Hazardous voltage or other forms of energy could be present. To avoid serious injury or death:

Prior to beginning the installation and wiring process, make sure that all forms of energy to the installation site have been properly turned OFF and locked out.

ATTENTION

ElectroGuard® system modules are factory sealed with a tamper-indicating seal. Altering, defeating, or bypassing any module or component of the Safety Isolation System may result in personal injury, death, property damage, or economic loss. Only qualified service technicians must perform service or maintenance. Resealing of the modules is the responsibility of the person or organization performing the service or maintenance.

ATTENTION

Only qualified service technicians familiar with the ElectroGuard® and associated machinery should plan or implement the installation, commissioning, and subsequent maintenance of the system. Failure to do this may result in personal injury and/or equipment damage.

ATTENTION

In order to help avoid serious injury or death, proper lifting techniques and equipment must be used when moving and installing the ElectroGuard®. The lifting means must be capable of lifting the weight of the panel.

Figure 6.59
Pneumatic Isolation Module Muffler

Muffler (bottom view of enclosure)

Removal

1. Unlatch the electrical connector from the right side of the Pneumatic Isolation Module (see Figure 6.60).

Figure 6.60
Unlatching the Electrical Connector from the Pneumatic Isolation Module

2. Using appropriately-sized wrenches, disconnect the air inlet piping from the right side of the Pneumatic Isolation Module (see Figure 6.61). Hold the Pneumatic Isolation Module air inlet fitting when disconnecting the inlet piping so internal fittings do not loosen up.

Figure 6.61
Pneumatic Isolation Module Air Inlet

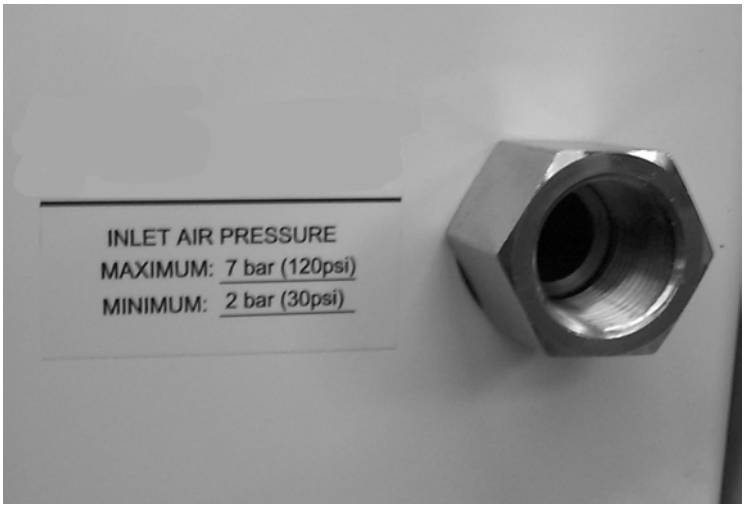

3. Using appropriately-sized wrenches, disconnect the air outlet piping from the bottom of the Pneumatic Isolation Module (see Figure 6.62). hold the Pneumatic Isolation Module air outlet fitting when disconnecting the outlet piping so internal fittings do not loosen up.

Figure 6.62
Pneumatic Isolation Module Air Outlet Piping (Bottom View of Module)

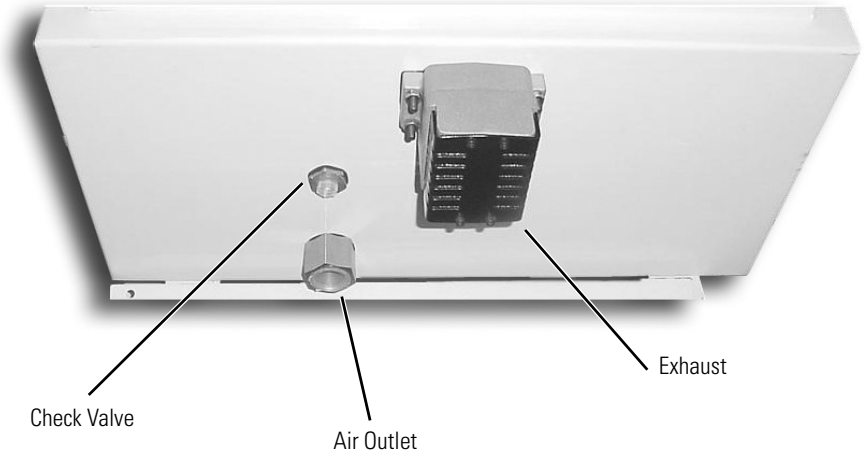

ATTENTION

The Pneumatic Isolation Module weighs approximately 135 lbs (61.2 kg). The lifting means (hoist or fork truck) must be certified to lift the weight of the panel.

4. If a hoist is used to remove the Pneumatic Isolation Module, fasten the lifting chain to the two eyebolts located on the top surface of the module (see Figure 6.63).

Figure 6.63
Pneumatic Isolation Module Lifting Eyebolts and Top Mounting Means

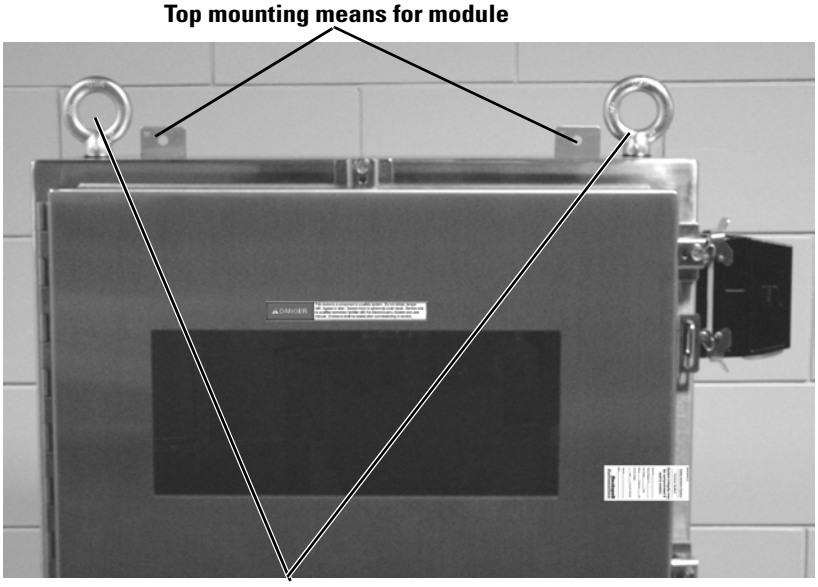

5. Loosen, but do not remove the two bolts securing the bottom of the enclosure to the mounting surface (see Figure 6.64).

Figure 6.64
Pneumatic Isolation Module Bottom Mounting Means

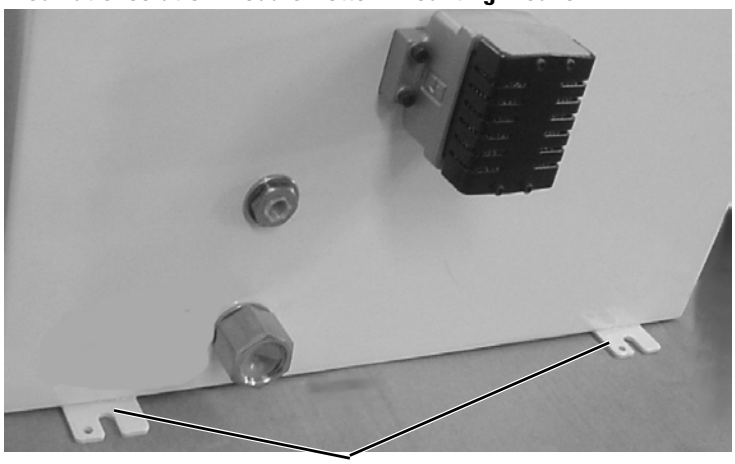

6. Loosen and remove the two bolts securing the top of the enclosure to the mounting surface (see Figure 6.63).

7. Carefully lift and remove the Pneumatic Isolation Module from the two bottom mounting bolts.

Installation

1. With the lifting means attached to the replacement Pneumatic Isolation Module, position the module on the two bottom enclosure mounting bolts.
2. Re-install the two top enclosure mounting bolts.
3. Tighten all four enclosure mounting bolts securely.
4. Remove the lifting means.
5. Affix Teflon® tape to the threaded ends of the air inlet and air outlet piping.
6. Connect the air outlet piping to the bottom of the enclosure. Fasten securely.
7. Connect the air inlet piping to the right side of the enclosure. Fasten securely.
8. Reconnect the electrical connector to the right side of the Pneumatic Isolation Module. Press down on the connector locking tabs to secure.

Power Restoration

1. Remove the padlock from the pneumatic energy shut-off valve.
2. Turn the pneumatic energy source ON.
3. Remove the padlock from the branch circuit protection on the ElectroGuard® Power Panel or the upstream customer-supplied branch circuit protection feeding electrical energy to the SIS.
4. If the SIS includes the Communication Module, remove the padlock from the source feeding electrical energy to the module and restore the supply voltage. Close the ElectroGuard® Power Panel door and secure the cover fasteners.
5. Turn the branch circuit protection operating handle to the ON position.
6. Remove the padlock from the RLS.
7. Press the System ON push button.
8. Perform recommissioning of the system.
9. Follow proper start-up procedures to restart the machine or process.

Notes:

Cat. No. Explanation

Section	Page
Bulletin 2031 Non-Combination Systems (23…85 A)	A-2
Bulletin 2031 Non-Combination Systems (110…1200 A)	A-3
Bulletin 2032 Combination Systems with Fusible Disconnect (23…85 A)	A-4
Bulletin 2032 Combination Systems with Fusible Disconnect (110…1200 A)	A-5
Bulletin 2033 Combination Systems with Thermal-Magnetic Circuit Breaker (23…85 A)	A-6
Bulletin 2033 Combination Systems with Thermal-Magnetic Circuit Breaker (110…1200 A)	A-7
Bulletin 2030 Remote Lockout Station	A-8
Bulletin 2030 Expansion Module	A-8
Bulletin 2030 Pneumatic Isolation Module	A-9
Bulletin 2030 Control Module	A-9

IMPORTANT This information is presented only as an aid to understanding cat. nos. It is not to be used to build cat. nos. for the ElectroGuard® system or its components.

Bulletin 2031 Non-Combination Systems (23…85 A)

2031 – A 0085 A B – 1PN

Bulletin No.

Code	Description
2031	Non-combination system

Construction Code

Code	Description
A	Standard, North America
M	MCC*, 600 A Line Side Bus and Load Side Power Cables, North America
S	MCC*, 1200 A Line Side Bus and Load Side Power Cables, North America
F	MCC*, Line Side Power Cables and 600 A Load Side Bus, North America
B	MCC*, Line Side Power Cables and 1200 A Load Side Bus, North America
C	Standard, outside North America
E	MCC*, 600 A Line Side Bus and Load Side Power Cables, outside North America
D	MCC*, 1200 A Line Side Bus and Load Side Power Cables, outside North America
H	MCC*, Line Side Power Cables and 600 A Load Side Bus, outside North America
R	MCC*, Line Side Power Cables and 1200 A Load Side Bus, outside North America

* Bus Type: Copper with tin plating

Ratings

Ampere Rating (AC-3)	3-Phase Max. Hp Rating (60 Hz)				3-Phase Max. kW Rating (50 Hz)			
	200V	230V	460V	460V	230V	400V	500V	600V
0023	5	7.5	15	15	7.5	11	11	11
0043	10	15	30	30	13	22	22	22
0085	25	30	60	60	25	45	45	45

Factory-Installed Options

Code	Description
1TD	Control Module with factory set 30-second Time Delay
1PN	Safety Isolation System to be supplied “Pneumatic-ready”
Communication Module Options (Select Only One)	
1COM	1 Flex I/O Module (16 points of Remote I/O)
2COM	2 Flex I/O Module (32 points of Remote I/O)
3COM	3 Flex I/O Module (48 points of Remote I/O)
1DNET	1 DeviceNet Modules (16 points of I/O)
2DNET	2 DeviceNet Modules (32 points of I/O)
3DNET	3 DeviceNet Modules (48 points of I/O)
Cover-mounted Meter Options	
1AM	Single-phase ammeter
3AM	Three-phase ammeter
1VM	Single-phase voltmeter
3VM	Three-phase voltmeter

Input Line Voltage

Code	Description
A	240V 60Hz / 220V 50Hz, 3-phase
B	480V 60Hz / 440V 50Hz, 3-phase
C	60V 60Hz / 550V 50Hz, 3-phase
G	400…415V 50Hz, 3-phase
H	208V / 60Hz, 3-phase
M	500V 50Hz, 3-phase
N	380…400V 50Hz, 3-phase

Enclosure Type

Code	Description
A	Type 1 General Purpose
C	Type 4X Water-Tight Stainless Steel
F	Type 4 Water Tight Painted Steel
H	IP54
J	Type 12 Dust Tight
P	IP30
W	IP65

Bulletin 2031 Non-Combination Systems (110…1200 A)

2031 – T H 0420 A B – 1PN

Bulletin No.

Code	Description
2031	Represents a non-combination system (i.e. one without a disconnecting means or branch circuit protection).

Input Power Feed

Code	Description
	No need to specify on 110…420 A Systems
B	Bottom Feed for 630…1200 A Systems
T	Top Feed for 630…1200 A Systems

Enclosure Type

Code	Description
C	Type 4X Water Tight Stainless Steel
F	Type 4 Water Tight Painted Steel
H	IP54
J	Type 12 Dust Tight
W	IP65

Construction Code

Code	Description
A	Free-Standing Enclosure design for North America
B	Motor Control Center enclosure for North America with Line Side Incoming Power Cables and 1200 A Load Side Outgoing Bus*
C	Free-standing Enclosure design for outside of North America
D	Motor Control Center enclosure for outside of North America with 1200 A Line Side Incoming Bus* and Outgoing Power Cables
E	Motor Control Center enclosure for outside of North America with 600 A Line Side Incoming Bus* and Outgoing Power Cables
F	Motor Control Center enclosure for North America with Line Side Incoming Power Cables and 600 A Load Side Outgoing Bus*
H	Motor Control Center enclosure for outside of North America with Line Side Incoming Power Cables and 600 A Load Side Outgoing Bus*
M	Motor Control Center enclosure for North America with 600 A Line Side Incoming Bus* and Outgoing Power Cables
R	Motor Control Center enclosure for outside of North America with Line Side Incoming Power Cables and 1200 A Load Side Outgoing Bus*
S	Motor Control Center enclosure for North America with 1200 A Line Side Incoming Bus* and Outgoing Power Cables

* Bus Type: Copper with tin plating.

Ratings

Ampere Rating (AC-3)	3-Phase Max. Hp rating (60Hz)				3-Phase Max. kW rating (50 Hz)			
	200V	230V	460V	575V	230V	400V	500V	600V
0110	40	40	74	100	32	55	63	100
0180	50	60	150	150	55	90	110	160
0210	60	75	-	200	63	110	150	200
0300	100	125	250	300	90	160	200	300
0420	150	175	350	400	132	220	300	425
0630	200	250	500	600	200	355	450	500
0860	250	300	600	700	250	500	560	600
1200	450	450	900	900	391	710	888	1043

Input Line Voltage

Code	Description
A	240V 60Hz / 220V 50Hz
B	480V 60Hz / 440V 50Hz
C	60V 60Hz / 550V 50Hz
G	400…415V 50Hz
H	208V / 60Hz
M	500V 50Hz
N	380…400V 50Hz

Factory-Installed Options

Code	Description
1AM	Single-phase ammeter
3AM	3-phase ammeter
1COM	One Flex I/O Module (16 points of I/O)
2COM	Two Flex I/O Modules (32 points of I/O)
1CNET	One ControlNet Module
2CNET	Two ControlNet Modules
1DNET	One DeviceNet Module (16 points of I/O)
2DNET	Two DeviceNet Modules (32 points of I/O)
1ENET	One EtherNet Module
2ENET	Two EtherNet Modules
1 PNET	One Profibus Module
2 PNET	Two Profibus Modules
1EUF*	One 4-port Expansion Module installed in the ElectroGuard® Power Panel
2EUF**	Two 4-port Expansion Modules installed in the ElectroGuard® Power Panel
1EUFTDA*	One 4-port Expansion Module with adjustable 1…30 second time delay, installed in the ElectroGuard® Power Panel
2EUFTDA**	Two 4-port Expansion Modules with 1…30 second time delay, installed in the ElectroGuard® Power Panel
1EUT*	One 10-port Expansion Module installed in the ElectroGuard® Power Panel
2EUT**	Two 10-port Expansion Modules installed in the ElectroGuard® Power Panel
1EUTTDA*	One 10-port Expansion Module with 1…30 second time delay, installed in the ElectroGuard® Power Panel
2EUTTDA**	Two 10-port Expansion Modules with 1…30 second time delay, installed in the ElectroGuard® Power Panel
1PN	Safety Isolation System to be supplied “Pneumatic ready”
1TD	Control Module with factory-set 30 second time delay
1VM	Single-phase voltmeter
3VM	3-phase voltmeter

* 110…420 A ElectroGuard® maximum of one Expansion Module
** 630…1200 A ElectroGuard® maximum of two Expansion Modules

Bulletin 2032 Combination Systems with Fusible Disconnect (23…85 A)

2032 – A 0085 A B – 26J – 1PN

Bulletin No.

Code	Description
2032	Combination system with a fusible disconnect switch as the disconnect/branch circuit protection

Ratings

Ampere Rating (AC-3)	3-Phase Max. Hp Rating (60 Hz)				3-Phase Max. kW Rating (50 Hz)			
	200V	230V	460V	575V	230V	400V	500V	600V
0023	5	7.5	15	15	5.5	11	11	11
0043	10	15	30	30	11	22	22	22
0085	25	30	60	60	22	45	45	45

Construction Code

Code	Description
A	Free-Standing Enclosure design for North America
B	Motor Control Center enclosure for North America with Line Side Incoming Power Cables and 1200 A Load Side Outgoing Bus*
C	Free-standing Enclosure design for outside of North America
D	Motor Control Center enclosure for outside of North America with 1200 A Line Side Incoming Bus* and Outgoing Power Cables
E	Motor Control Center enclosure for outside of North America with 600 A Line Side Incoming Bus* and Outgoing Power Cables
F	Motor Control Center enclosure for North America with Line Side Incoming Power Cables and 600 A Load Side Outgoing Bus*
H	Motor Control Center enclosure for outside of North America with Line Side Incoming Power Cables and 600 A Load Side Outgoing Bus*
M	Motor Control Center enclosure for North America with 600 A Line Side Incoming Bus* and Outgoing Power Cables
R	Motor Control Center enclosure for outside of North America with Line Side Incoming Power Cables and 1200 A Load Side Outgoing Bus*
S	Motor Control Center enclosure for North America with 1200 A Line Side Incoming Bus* and Outgoing Power Cables

* Bus Type: Copper with tin plating.

Enclosure Type

Code	Description
C	Type 4X Water Tight Stainless Steel
F	Type 4 Water Tight Painted Steel
H	IP54
J	Type 12 Dust Tight
W	IP65

Input Line Voltage

Code	Description
A	240V 60 Hz/220V 50 Hz, 3–phase
B	480V 60 Hz/440V 50 Hz, 3–phase
C	600V 60 Hz/550V 50 Hz, 3–phase
G	400…415V 50 Hz, 3–phase
H	208V 60 Hz, 3–phase
M	500V 50 Hz, 3–phase
N	380…400V 50 Hz, 3–phase

Fuse Clip Rating/Type

Code	Description
24J	30 A, Class J-type fuses
25J	60 A, Class J-type fuses
26J	100 A, Class J-type fuses
27J	200 A, Class J-type fuses

Note: Power fuses are not included with the disconnect switch.

Factory-Installed Options

Code	Description
1TD	Control Module with factory set 30-second time delay
1PN	Safety Isolation System to be supplied “Pneumatic-ready”
Communication Module Options	
1COM	1 Flex I/O Module (16-points of I/O)
2COM	2 Flex I/O Modules (32-points of I/O)
1CNET	1 ControlNet Module
2CNET	2 ControlNet Modules
1DNET	1 DeviceNet Module (16-points of I/O)
2DNET	2 DeviceNet Modules (32-points of I/O)
1ENET	1 EtherNet Module
2ENET	2 EtherNet Modules
1PNET	1 Profibus Module
2PNET	2 Profibus Modules
Cover-mounted Meter Options	
1AM	Single-phase ammeter
3AM	Three-phase ammeter
Expansion Module Options	
1EUF*	One 4-Port Expansion Module installed in the ElectroGuard® power Panel
2EUF**	Two 4-Port Expansion Modules installed in the ElectroGuard® Power Panel
1EUFTDA*	One-4-Port Expansion Module with adjustable 1-30 second time delay, installed in the ElectroGuard® Power Panel
2EUFTDA**	Two 4-Port Expansion Modules with 1-30 second time delay, installed in the ElectroGuard® Power Panel
1EUT*	One 10-Port Expansion Module installed in the ElectroGuard® Power Panel
2EUT**	Two 10-Port Expansion Modules installed in the ElectroGuard® Power Panel
1EUTTDA*	One 10-Port Expansion Module with 1-30 second time delay, installed in the ElectroGuard® Power Panel
2EUTTDA**	Two 10-Port Expansion Modules with 1-30 second time delay, installed in the ElectroGuard® Power Panel

* 110…420 A ElectroGuard® maximum of one Expansion Module
** 630…1200 A ElectroGuard® maximum of two Expansion Modules

Bulletin 2032 Combination Systems with Fusible Disconnect (110…1200 A)

2032 – T H 0420 A B – 29J – 1PN

Bulletin No.

Code	Description
2032	Represents a combination system with a fusible disconnect switch as the disconnecting / branch circuit protection means.

Input Power Feed

Code	Description
	No need to specify on 110…420 A Systems
B	Bottom Feed for 630…1200 A Systems
T	Top Feed for 630…1200 A Systems

Enclosure Type

Code	Description
C	Type 4X Water Tight Stainless Steel
F	Type 4 Water Tight Painted Steel
H	IP54
J	Type 12 Dust Tight
W	IP65

Construction Code

Code	Description
A	Free-standing enclosure design for North America without power bussing
B	Motor Control Center enclosure for North America with Line Side Incoming Power Cables and 1200 A Load Side Outgoing Bus*
C	Free-standing enclosure design for outside of North America
D	Motor Control Center enclosure for outside of North America with 1200 A Line Side Incoming Bus* and Outgoing Power Cables
E	Motor Control Center enclosure for outside of North America with 600 A Line Side Incoming Bus* and Outgoing Power Cables
F	Motor Control Center enclosure for North America with Line Side Incoming Power Cables and 600 A Load Side Outgoing Bus*
H	Motor Control Center enclosure for outside of North America with Line Side Incoming Power Cables and 600 A Load Side Outgoing Bus*
M	Motor Control Center enclosure for North America with 600 A Line Side Incoming Bus* and Outgoing Power Cables
R	Motor Control Center enclosure for outside of North America with Line Side Incoming Power Cables and 1200 A Load Side Outgoing Bus*
S	Motor Control Center enclosure for North America with 1200 A Line Side Incoming Bus* and Outgoing Power Cables

* Bus Type: Copper with tin plating.

Ratings

Ampere Rating (AC-3)	3-Phase Max. Hp rating (60Hz)				3-Phase Max. kW rating (50 Hz)			
	200V	230V	460V	575V	230V	400V	500V	600V
0110	40	40	74	100	32	55	63	100
0180	50	60	150	150	55	90	110	160
0210	60	75	-	200	63	110	150	200
0300	100	125	250	300	90	160	200	300
0420	150	175	350	400	132	220	300	425
0630	200	250	500	600	200	355	450	500
0860	250	300	600	700	250	500	560	600
1200	450	450	900	900	391	710	888	1043

Input Line Voltage

Code	Description
A	240V 60Hz / 220V 50Hz
B	480V 60Hz / 440V 50Hz
C	60V 60Hz / 550V 50Hz
G	400…415V 50Hz
H	208V / 60Hz
M	500V 50Hz
N	380…400V 50Hz

Fuse Clip Rating / Type

Code	Description	
27B	200 A	BS88
27D	160 A	DIN
27J	200 A	Class J
28D	250 A	DIN
29B	400 A	BS88
29D	400 A	DIN
29J	400 A	Class J
30B	600 A	BS88
30D	630 A	DIN
30L	800 A	Class L
31B	800 A	BS88
31D	1600 A	DIN
32B	1250 A	BS88
34L	2000 A	Class L

Factory-Installed Options

Code	Description
1AM	Single-phase ammeter
3AM	3-phase ammeter
1COM	One Remote I/O Module (16 points of I/O)
2COM	Two Remote I/O Modules (32 points of I/O)
1CNET	One ControlNet Module
2CNET	Two ControlNet Modules
1DNET	One DeviceNet Module (16 points of I/O)
2DNET	Two DeviceNet Modules (32 points of I/O)
1ENET	One EtherNet Module
2ENET	Two Ethernet Modules
1PNET	One Profibus Module
2PNET	Two Profibus Modules
1EUF*	One 4-port Expansion Module installed in the ElectroGuard® Power Panel
2EUF**	Two 4-port Expansion Modules installed in the ElectroGuard® Power Panel
1EUFTDA*	One 4-port Expansion Module with adjustable 1…30 second time delay, installed in the ElectroGuard® Power Panel
2EUFTDA**	Two 4-port Expansion Modules with adjustable 1…30 second time delay, installed in the ElectroGuard® Power Panel
1EUT*	One 10-port Expansion Module installed in the ElectroGuard® Power Panel
2EUT**	Two 10-port Expansion Modules installed in the ElectroGuard® Power Panel
1EUTTDA*	One 10-port Expansion Module with adjustable 1-30 second time delay, installed in the ElectroGuard® Power Panel
2EUTTDA**	Two 10-port Expansion Modules with adjustable 1…30 second time delay, installed in the ElectroGuard® Power Panel
1PN	Safety Isolation System to be supplied “pneumatic ready”
1TD	Control Module with factory-set 30-second time delay
1VM	Single-phase voltmeter
3VM	3-phase voltmeter

* 110…420 A ElectroGuard® maximum of one internal Expansion Module
** 630…1200 A ElectroGuard® maximum of two internal Expansion Modules

Bulletin 2033 Combination Systems with Thermal-Magnetic Circuit Breaker (23…85 A)

2033 – A 0085 A B – 46 – 1PN

Bulletin No.

Code	Description
2033	Combination system with a thermal-magnetic circuit breaker as the disconnect/ branch circuit protection

Ratings

Ampere Rating (AC-3)	3-Phase Max. Hp Rating (60 Hz)				3-Phase Max. kW Rating (50 Hz)			
	200V	230V	460V	575V	230V	400V	500V	600V
0023	5	7.5	15	15	7.5	11	11	11
0043	10	15	30	30	13	22	22	22
0085	25	30	60	60	25	45	45	45

Construction Code

Code	Description
A	Free-Standing Enclosure design for North America
B	Motor Control Center enclosure for North America with Line Side Incoming Power Cables and 1200 A Load Side Outgoing Bus*
C	Free-standing Enclosure design for outside of North America
D	Motor Control Center enclosure for outside of North America with 1200 A Line Side Incoming Bus* and Outgoing Power Cables
E	Motor Control Center enclosure for outside of North America with 600 A Line Side Incoming Bus* and Outgoing Power Cables
F	Motor Control Center enclosure for North America with Line Side Incoming Power Cables and 600 A Load Side Outgoing Bus*
H	Motor Control Center enclosure for outside of North America with Line Side Incoming Power Cables and 600 A Load Side Outgoing Bus*
M	Motor Control Center enclosure for North America with 600 A Line Side Incoming Bus* and Outgoing Power Cables
R	Motor Control Center enclosure for outside of North America with Line Side Incoming Power Cables and 1200 A Load Side Outgoing Bus*
S	Motor Control Center enclosure for North America with 1200 A Line Side Incoming Bus* and Outgoing Power Cables

* Bus Type: Copper with tin plating.

Enclosure Type

Code	Description
C	Type 4X Water Tight Stainless Steel
F	Type 4 Water Tight Painted Steel
H	IP54
J	Type 12 Dust Tight
W	IP65

Input Line Voltage

Code	Description
A	240V 60 Hz/220V 50 Hz, 3-phase
B	480V 60 Hz/440V 50 Hz, 3-phase
C	600V 60 Hz/550V 50 Hz, 3-phase
G	400…415V 50 Hz, 3-phase
H	208V 60 Hz, 3-phase
M	500V 50 Hz, 3-phase
N	380…400V 50 Hz, 3-phase

Circuit Breaker Hp/kW Rating

Code	Description	Code	Description
39	5 Hp	39K	4 kW
40	7.5 Hp	40K	5.5 kW
41	10 Hp	41K	7.5 kW
42	15 Hp	42K	11 kW
43	20 Hp	43K	13 kW
44	25 Hp	44K	15 kW
45	30 Hp	46K	22 kW
46	40 Hp	47K	25 kW
47	50 Hp	48K	32 kW
48	60 Hp	49K	37 kW
—	—	50K	45 kW

Factory-Installed Options

Code	Description
1TD	Control Module with factory set 30-second time delay
1PN	Safety Isolation System to be supplied "Pneumatic-ready"
Communication Module Options	
1COM	1 Flex I/O Module (16-points of I/O)
2COM	2 Flex I/O Modules (32-points of I/O)
1CNET	1 ControlNet Module
2CNET	2 ControlNet Modules
1DNET	1 DeviceNet Module (16-points of I/O)
2DNET	2 DeviceNet Modules (32-points of I/O)
1ENET	1 EtherNet Module
2ENET	2 EtherNet Modules
1PNET	1 Profibus Module
2PNET	2 Profibus Modules
Cover-mounted Meter Options	
1AM	Single-phase ammeter
3AM	Three-phase ammeter
Expansion Module Options	
1EUF*	One 4-Port Expansion Module installed in the ElectroGuard® Power Panel
2EUF**	Two 4-Port Expansion Modules installed in the ElectroGuard® Power Panel
1EUFTDA*	One-4-Port Expansion Module with adjustable 1…30 second time delay, installed in the ElectroGuard® Power Panel
2EUFTDA**	Two 4-Port Expansion Modules with 1…30 second time delay, installed in the ElectroGuard® Power Panel
1EUT*	One 10-Port Expansion Module installed in the ElectroGuard® Power Panel
2EUT**	Two 10-Port Expansion Modules installed in the ElectroGuard® Power Panel
1EUTTDA*	One 10-Port Expansion Module with 1-30 second time delay, installed in the ElectroGuard® Power Panel
2EUTTDA**	Two 10-Port Expansion Modules with 1-30 second time delay, installed in the ElectroGuard® Power Panel

* 110…420 A ElectroGuard® maximum of one Expansion Module
** 630…1200 A ElectroGuard® maximum of two Expansion Modules

Bulletin 2033 Combination Systems with Thermal-Magnetic Circuit Breaker (110…1200 A)

2033 – T H 0300 A B – 56 – 1PN

Bulletin No.

Code	Description
2033	Represents a combination system with a thermal-magnetic circuit breaker as the disconnecting / branch circuit protection means.

Input Power Feed

Code	Description
	No need to specify on 110…420 A Systems
B	Bottom Feed for 630…1200 A Systems
T	Top Feed for 630…1200 A Systems

Enclosure Type

Code	Description
C	Type 4X Water Tight Stainless Steel
F	Type 4 Water Tight Painted Steel
H	IP54
J	Type 12 Dust Tight
W	IP65

Construction Code

Code	Description
A	Wall mount enclosure design for North America
B	Motor Control Center enclosure for North America with Line Side Incoming Power Cables and 1200 A Load Side Outgoing Bus*
C	Wall mount enclosure design for outside of North America
D	Motor Control Center enclosure for outside of North America with 1200 A Line Side Incoming Bus* and Outgoing Power Cables
E	Motor Control Center enclosure for outside of North America with 600 A Line Side Incoming Bus* and Outgoing Power Cables
F	Motor Control Center enclosure for North America with Line Side Incoming Power Cables and 600 A Load Side Outgoing Bus*
H	Motor Control Center enclosure for outside of North America with Line Side Incoming Power Cables and 600 A Load Side Outgoing Bus*
M	Motor Control Center enclosure for North America with 600 A Line Side Incoming Bus* and Outgoing Power Cables
R	Motor Control Center enclosure for outside of North America with Line Side Incoming Power Cables and 1200 A Load Side Outgoing Bus*
S	Motor Control Center enclosure for North America with 1200 A Line Side Incoming Bus* and Outgoing Power Cables

* Bus Type: Copper with tin plating

Ratings

Ampere Rating (AC-3)	3-Phase Max. Hp rating (60Hz)				3-Phase Max. kW rating (50 Hz)			
	200V	230V	460V	575V	230V	400V	500V	600V
0110	40	40	74	100	32	55	63	100
0180	50	60	150	150	55	90	110	160
0210	60	75	-	200	63	110	150	200
0300	100	125	250	300	90	160	200	300
0420	150	175	350	400	132	220	300	425
0630	200	250	500	600	200	355	450	500
0860	250	300	600	700	250	500	560	600
1200	450	450	900	900	391	710	888	1043

Input Line Voltage

Code	Description
A	240V 60Hz / 220V 50Hz
B	480V 60Hz / 440V 50Hz
C	60V 60Hz / 550V 50Hz
G	400…415V 50Hz
H	208V / 60Hz
M	500V 50Hz
N	380…400V 50Hz

Circuit Breaker Hp/kW Rating

Code	Description	Code	Description	Code	Description
45	30 Hp	55K	100 kW	63K	250 kW
46	40 Hp	56	250 Hp	64K	300 kW
47	50 Hp	56K	110 kW	65K	355 kW
48	60 Hp	57	300 Hp	66	900 Hp
48K	32 kW	57K	132 kW	66K	390 kW
49	75 Hp	58	350 Hp	67K	425 kW
49K	37 kW	58K	150 kW	68K	450 kW
50K	45 kW	59	400 Hp	69K	500 kW
51	125 Hp	59K	160 kW	70K	560 kW
51K	55 kW	60	450 Hp	71K	600 kW
52	150 Hp	60K	185 kW	72K	710 kW
52K	63 kW	61	500 Hp	73K	750 kW
53	175 Hp	61K	200 kW	74K	850 kW
53K	75 kW	62	600 Hp	75K	888 kW
54	200 Hp	62K	220 kW	76K	1043 kW
54K	90 kW	63	700 Hp		

Factory-Installed Options

Code	Description
1AM	Single-phase ammeter
3AM	3-phase ammeter
1COM	One Remote I/O Module (16 points of I/O) (85 A frame)
2COM	Two Remote I/O Modules (32 points of I/O) (1200 A frame)
1CNET	One ControlNet Module
2CNET	Two ControlNet Modules
1DNET	One DeviceNet Module (16 points of I/O)
2DNET	Two DeviceNet Modules (32 points of I/O)
1ENET	One EtherNet Module
2ENET	Two EtherNet Modules
1PNET	One Profibus Module
2PNET	Two Profibus Modules
1EUF*	One 4-port Expansion Module installed in the ElectroGuard® Power Panel
2EUF**	Two 4-port Expansion Modules installed in the ElectroGuard® Power Panel
1EUFTDA*	One 4-port Expansion Module with adjustable 1…30 second time delay, installed in the ElectroGuard® Power Panel
2EUFTDA**	Two 4-port Expansion Modules with adjustable 1…30 second time delay, installed in the ElectroGuard® Power Panel
1EUT*	One 10-port Expansion Module installed in the ElectroGuard® Power Panel
2EUT**	Two 10-port Expansion Modules installed in the ElectroGuard® Power Panel
1EUTTDA*	One 10-port Expansion Module with adjustable 1…30 second time delay, installed in the ElectroGuard® Power Panel
2EUTTDA**	Two 10-port Expansion Modules with adjustable 1…30 second time delay, installed in the ElectroGuard® Power Panel
1PN	Safety Isolation System to be supplied “pneumatic ready”
1TD	Control Module with factory-set 30-second time delay
1VM	Single-phase voltmeter
3VM	3-phase voltmeter

* 110…420 A ElectroGuard® maximum of one internal Expansion Module
** 630…1200 A ElectroGuard® maximum of two internal Expansion Modules

Bulletin 2030 Remote Lockout Station

2030 – RLS J W D

Bulletin No.

Product Descriptor

Code	Description
RLS	Remote lockout station

Enclosure Type

Code	Description
C	Type 4X Water Tight Stainless Steel
F	Type 4 Water Tight Painted Steel
H	IP54
J	Type 12 Dust Tight
W	IP65

System Isolated Light Color

Code	Color
G	Green
W	White

Dual RLS

Bulletin 2030 Expansion Module

2030 – EU N F – 1TD

Bulletin No.

Product Descriptor

Code	Description
EU	Expansion Module

Enclosure Type

Code	Description
C	Type 4X Water Tight Stainless Steel
F	Type 4 Water Tight Painted Steel
H	IP54
J	Type 12 Dust Tight
N	Open Type
W	IP65

"System Isolated" Light Color

Code	Description
F	Four-port
T	Ten-port

Factory-Installed Options

Code	Description
1COM	One Flex I/O Module (16 points of I/O)
1CNET	One ControlNet Module
1DNET	One DeviceNet Module (16 points of I/O)
1ENET	One EtherNet Module
1PNET	One Profibus Module
1TD	Expansion Module with factory set 30 second time delay

Bulletin 2030 Pneumatic Isolation Module

2030 – P J 120 1

Bulletin No.

Product Descriptor

Code	Description
P	Pneumatic isolation Module

Enclosure Type

Code	Description
C	Type 4X Water Tight Stainless Steel
F	Type 4 Water Tight Painted Steel
H	IP54
J	Type 12 Dust Tight
W	IP65

Pressure Range

Code	Description
120	30…120 psi
007	2…7 bar

Port Size

Code	Description	CFM at 90 PSI
1	1 in.	380
2	1/2 in.	160
3	3/4 in.	380
4	1 in.	650
6	1-1/2 in.	1750

Bulletin 2030 Control Module

2030 – CH1200 ⊗ 1TD

Bulletin No.

Product Descriptor

Code	Description
CH1200	110…1200 A Control Module
CH0085	23…85 A Control Module

Input Line Voltage	Input Line Voltage Code
220…240V 50…60 Hz	A
440…480V 50…60 Hz	B
550…600V 50…60 Hz	C
400…415V 50 Hz	G
208V 60 Hz	H
500V 50 Hz	M
380…400V 50 Hz	N

Factory-Installed Options

Code	Description
1TD	Time Delay
1PN	Pneumatic Ready

Bulletin 2030 Verification Module

2030 – VM C

Bulletin No.

Product Description

Code	Description
VM	Verification Module

Enclosure Type

Code	Description
C	Type 4X Stainless Steel
J	Type 12 Dust Tight

Notes:

Specifications

Table B.1
Specifications

Power Panel Line/Load Specifications	
Terminals	L1, L2, L3, T1, T2, T3, PE, & ISOLATED GND
Rated Insulation Voltage	208…600V AC, see catalog number explanation
Rated Operating Voltage	208…600V AC, see catalog number explanation
Rated Operating Voltage Range	-15%, +10% of rated voltage
Rated Operating Current	0…1200 A, see catalog explanation
Rated Operating Frequency	50/60 Hz, see catalog explanation
Rated Operating Frequency Range	47…62 Hz, see catalog explanation
Numbers of poles	3
Application	3 phase
Dielectric Withstand	2,200V AC
Utilization Category	AC 3
Power Contactor operational life (isolating and ground)	2,000,000 operations (approximate)
Control Module Specifications	
RLS Terminals	23...85 A models include RLS1, RLS2, RLS3, RLS4, 110...1200 A models also include RLS5 and RLS6. 23...85 A support 4 directly connected Remote Lockout Stations; 110...1200 A models support 6 directly connected Remote Lockout Stations Supports up to 40 (23...85 A) and 60 (110...1200 A) Remote Lockout Stations with the use of Expansion Modules
I/O Terminals	IP2 system status HP1, HP2 optional Pneumatic Module IP1 signal from optional power panel time delay IP4 & ZB signal from optional Expansion Module time delay HV voltage monitor IP3 interconnections FB1, FB2 (110…1200 A only)
	Contact Closure, 1 A @ 120V
Construction	Factory sealed. Viewing window for visual verification of status indicating lights. NEMA Type 0

Table B.1
Specifications (Continued)

Remote Lockout Station Specifications	
Terminals	1, 2, 3, 4, 6, 7, 8, 9, GND
Control Voltage	24V DC
Construction	Top and bottom 25.4 mm (1 in.) conduit entry holes, with hole seal in top entry hole and removable plug in bottom entry hole. Provision for tamper-indicating seal. Operating handles accept up to three padlocks
Operating Handle Operation Life	200,000 operations
Expansion Module Specifications	
Terminals	(11-pin pluggable connectors) RLS_A…D for 4 port modules RLS_A…J for 10 port modules PLC1EXB, PLC2EXB, EXB
Control Voltage	24V DC
Construction	Factory sealed. Viewing window for visual verification of status indicating lights.
Pneumatic Isolation Module Specifications	
Terminals	Air inlet, air outlet, and HC (24 pin)
Control Voltage	120V AC
Rated Pneumatic Range	30…120 psi (2…7 bar)
Environmental	
Operating Temperature Range	0…40°C (32…104°F)
Storage and transportation temperature range	–20…+75°C (–4…+167°F)
Altitude	2,000 m (6,560 ft)
Environmental Rating	NEMA Type 1, 12, 4, 4X, or IP30, IP54, and IP65 (See catalog explanation)
Enclosure Styles	Wall mounted, floor standing, motor control center, or other available as a custom (See catalog explanation)
Humidity	5…95% (non-condensing)
Cooling	NEMA Type 1 and 12 fan cooled, NEMA Type 4 and 4X vortex tube, or air conditioner cooled
Approximate Dimensions	
Refer to Chapter 2, Table 2.1 and Table 2.2, pages 2-5 and 2-6, respectively. Also refer to Figure 2.3 on page 2-5 through Figure 2.20 on page 2-24.	

Standards and Certifications - Conformity to Industry Standards

- UL508A with cUL listing, Industrial Control Panel
- TUV Rheinland certified to EN954-1 Category 4
- TUV Rheinland certified to EN60204-1
- Designed to conform to OSHA for control of hazardous energy
- CE (2030-VM* and 2030-RLS**D excluded)

Notes:

Sample Calculations of Remote Lockout Station Total Cable Length

IMPORTANT It is important not to exceed the maximum cable length values shown in Table 2.13 on page 2-63. If the maximum values are exceeded, this may result in an unreliable signal. Consider using an optional Expansion Module if cable lengths greater than those shown for the cable length to the Control Module are needed (see Installation and Wiring of the ElectroGuard® Remote Lockout Station(s) on page 2-56).

Scenario 1

An application will require two RLSs. The cable length from RLS 1 to the Control Module (in the ElectroGuard® Power Panel) will be 5,000 ft. The cable length from RLS 2 to the Control Module will be 10,000 ft. #14 AWG cable will be used to connect the RLSs to the Control Module (see Figure C.1).

Figure C.1

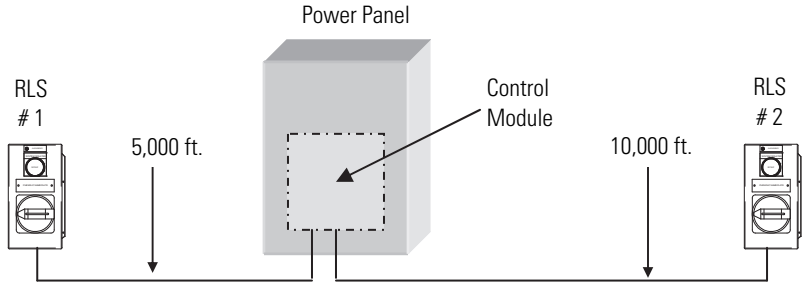

Analysis

The total cable length for the two RLSs is: 10,000 ft.+ 5,000 ft. = 15,000 ft.

The maximum allowable cable length for #14 AWG cable is 19,500 ft. for the RLSs to be connected to the Control Module. This installation will be within the maximum cable length permitted. (Install jumpers between connection points 3 and 8, and between connection points 4 and 9 of all unused RLS connectors on the Control Module.)

Scenario 2

An application will require eight RLSs:

- From RLS 1 to the Control Module (in the ElectroGuard® Power Panel): cable length = 500 ft.
- RLS 2 to the Control Module: cable length = 1,000 ft.
- RLS 3 to the Control Module: cable length = 2,000 ft.
- RLS 4 to the Control Module: cable length = 3,000 ft.
- RLS 5 to the Control Module: cable length = 5,000 ft.
- RLS 6 to the Expansion Module: cable length = 750 ft.
- RLS 7 to the Expansion Module: cable length = 850 ft.
- RLS 8 to the Expansion Module: cable length = 1,000 ft.

#14 AWG cable will be used to connect the RLSs to the Control Module and the Expansion Module (see Figure C.2).

Figure C.2

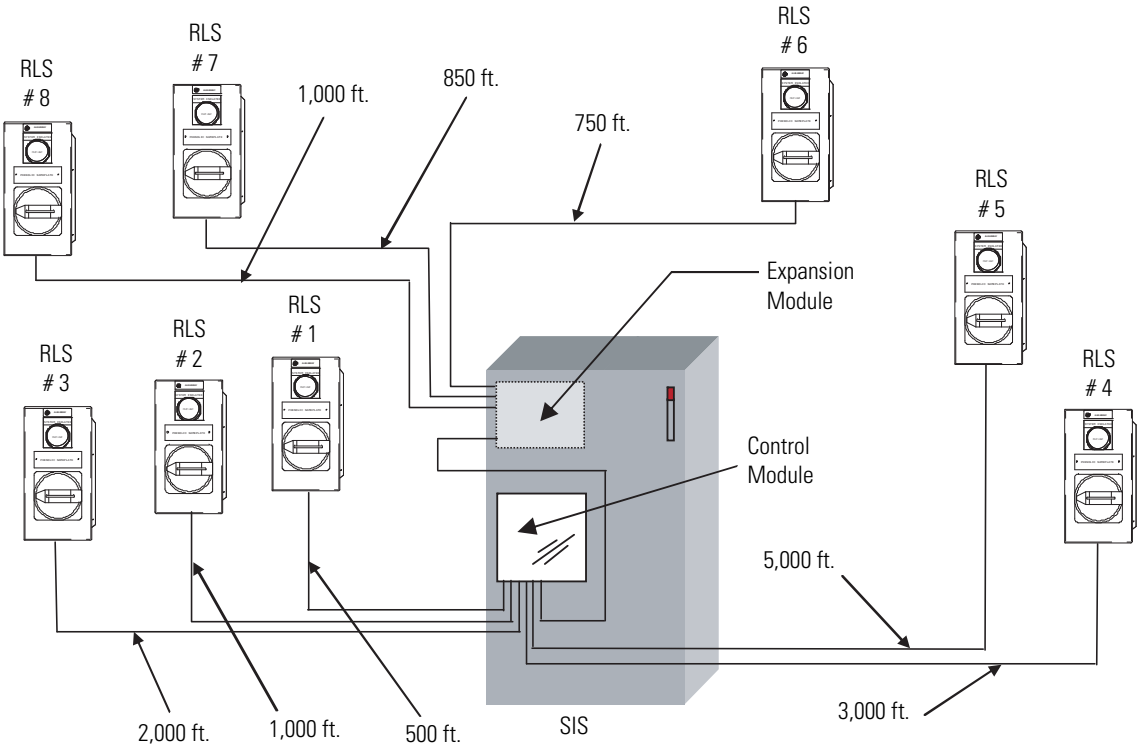

Analysis

Calculations for this scenario may be different, depending on your model.

110...1200 A

The Control Module furnished with the SIS is capable of supporting a maximum of six (6) RLS. Since this installation will require eight (8) RLS, an optional 4-port Expansion Module will also be used. The Expansion Module will be wired to the Control Module and will take the place of one of the original six RLS. Therefore, wire five of the RLS directly to the Control Module, and three of the RLS to the Expansion Module.

The total wire length for the five (5) RLS to be wired to the Control Module will be 500 ft. + 1,000 ft. + 2,000 ft. + 3,000 ft. + 5,000 ft. = 11,500 ft.

The maximum allowable wire length for #14 AWG wire is 19,500 ft. for the RLS to be wired to the Control Module. This portion of the installation will be within the maximum wire length permitted.

Next, check the wire length calculation for the RLSs to be wired to the Expansion Module.

- For RLS # 6: wire length = 750 ft.
- For RLS # 7: wire length = 850 ft.
- For RLS # 8: wire length = 1,000 ft.

The total wire length for the three RLSs to be wired to the Expansion Module will be 750 ft. + 850 ft. + 1,000 ft. = 2,600 ft.

The maximum allowable wire length for #14 AWG wire is 19,500 ft. for the RLSs to be wired to the Expansion Module. This portion of the installation will also be within the maximum wire length permitted.

(Install jumpers between pins 3 and 8, and between pins 4 and 9 of all unused RLS connectors on the Expansion Module. See Chapter 2 in the User Manual for details.)

23...85 A

The Control Module furnished with the ElectroGuard® is capable of supporting a maximum of four RLSs. Since this installation will require eight RLSs, an optional 10-port Expansion Module will also be used. The Expansion Module will be connected to the Control Module and will take the place of one of the original four RLSs. The cable length from the Control Module to the Expansion Module must also be considered when estimating maximum cable length for the Control Module. Therefore, connect three of the RLSs directly to the Control Module, and five of the RLSs to the

Expansion Module. The Expansion Module is mounted 500 ft. away from the Control Module.

The total cable length for the three RLSs and the Expansion Module to be connected to the Control Module will be:

500 ft. + 1,000 ft. + 2,000 ft. + 500 ft. = 4,000 ft.

The maximum allowable cable length for #14 AWG cable is 19,500 ft. for the RLSs and the Expansion Module to be connected to the Control Module. This portion of the installation will be within the maximum cable length permitted.

Next, check the cable length for the RLSs to be connected to the Expansion Module.

The total cable length for the five RLSs to be connected to the Expansion Module will be:

3,000 ft. + 5,000 ft. + 750 ft. + 850 ft. + 1,000 ft. = 10,600 ft.

The maximum allowable cable length for #14 AWG cable is 19,500 ft. for the RLSs to be connected to the Expansion Module. This portion of the installation will also be within the maximum cable length permitted.

Expansion Module Target Table

The Control Module in the ElectroGuard® Power Panel can accept four to six RLSs. When more RLSs are required for the application than the central module can hold, an expansion module can be used to accommodate the additional RLSs.

Table D.1
Maximum # of RLS Units

Expansion Units	23…85 A	110…1200 A
None	4	6
1…4 Port	7	9
1…10 Port	13	15
1…10 Port 1…4 Port	16	18
2…10 Port	22	24
2…10 Port 1…4 Port	25	27
3…10 Port	31	33
3…10 Port 1…4 Port	34	36
4…10 Port	40	42
4…10 Port 1…4 Port	—	45
5…10 Port	—	51
5…10 Port 1…4 Port	—	54
6…10 Port	—	60

Notes:

Replacement Parts

Section	Page
General	E-1
Replacement Parts for the ElectroGuard® Power Panel	E-2
Replacement Control Modules	E-9
Replacement Remote Lockout Station System Isolated Light LED Lamps	E-10
Replacement Remote Lockout Station Load Switch Assemblies	E-10

General

ATTENTION

Hazardous voltage or other forms of energy could be present. To avoid serious injury or death:

Prior to beginning the installation and wiring process, make sure that all forms of energy to the installation site have been properly turned OFF and locked out.

ATTENTION

ElectroGuard® system modules are factory sealed with a tamper-indicating seal. Altering, defeating, or bypassing any module or component of the Safety Isolation System may result in personal injury, death, property damage, or economic loss. Only qualified service technicians must perform service or maintenance. Resealing of the modules is the responsibility of the person or organization performing the service or maintenance.

ATTENTION

Only qualified service technicians familiar with the ElectroGuard® and associated machinery should plan or implement the installation, commissioning, and subsequent maintenance of the system. Failure to do this may result in personal injury and/or equipment damage.

With the exception of some basic components in the ElectroGuard® Power Panel, replacement parts for the SIS are limited to complete modules. See Chapter 4, *Troubleshooting*, in order to identify the specific module or component that should be replaced, and Chapter 6, *Replacement Procedures*, for information on how to replace the component or module.

The ElectroGuard® Power Panel is the only portion of the SIS that has component replacement parts available, as shown in Tables E.1 … E.10.

Replacement Parts for the ElectroGuard® Power Panel

Table E.1
Replacement Power Contactors (Isolation or Grounding)

System Rating	Part Number
23 A	100S-C23D23C contactor
	100-SA20 auxiliary contact blocks
	100-MCA02 mechanical interlock
43 A	100S-C43D22C contactor
	100-SA20 auxiliary contact blocks
	100-MCA02 mechanical interlock
85 A	100S-C85D22C contactor
	100-SA20 auxiliary contact blocks
	100-MCA02 mechanical interlock
110 A	100S-D110ED22C Contactor
	Auxiliary Contact – Not Required
	100-DMD02 Electrical/Mechanical Interlock
180 A	100S-D180ED22C
	Auxiliary Contact – Not Required
	100-DMD02 Electrical/Mechanical Interlock
210 A	100S-D210ED22C Contactor
	Auxiliary Contact – Not Required
	100-DMD02 Electrical/Mechanical Interlock
300 A	100S-D300ED22C Contactor
	Auxiliary Contact – Not Required
	100-DMD02 Electrical/Mechanical Interlock
420 A	100S-D420ED22C Contactor
	Auxiliary Contact – Not Required
	100-DMD02 Electrical/Mechanical Interlock
630 A	100S-D630ED22C Contactor
	Auxiliary Contact – Not Required
	100-DMD02 Electrical/Mechanical Interlock
860 A	100S-D860ED22C Contactor
	Auxiliary Contact – Not Required
	100-DMD02 Electrical/Mechanical Interlock
1200 A	100-G1200KD12 Contactor
	100-EB11 Auxiliary Contact
	100-MC007H Mechanical Interlock horizontal
	100-MC007V Mechanical Interlock vertical

Table E.2
Replacement Fusible Disconnect Switch ❶

System Rating	Catalog Suffix	Disconnect Switch Part Number
23 A	-24J	1494V-DS30
	-25J	
43 A	-25J	1494V-DS60
	-26J	
85 A	-26J	1494V-DS100
	-27J	
110 A	-27J	40126-931-11 (200 A Class J Fusing)
	-28J	40126-931-14 (400 A Class J Fusing)
180 A	-27J	40126-934-06 (200 A Class J Fusing)
	-28J	40126-934-11 (400 A Class J Fusing)
210 A	-28J	40126-934-11 (400 A Class J Fusing)
300 A	-28J	40126-934-11 (400 A Class J Fusing)
	-29J	40126-934-15 (600 A Class J Fusing)
420 A	-29J	40116-491-01 (600 A Class J Fusing)
	-30L	40116-491-02 (800 A Class L Fusing)
630 A	-30L	40116-491-03 (800 A Class L Fusing)
	-34L	40116-491-03 (2000 A Class L Fusing)
860 A	-34L	40116-491-03 (2000 A Class L Fusing)
1200 A	-34L	40116-512-01 for “Top Feed” Incoming Lines 40116-512-21 for “Bottom Feed” Incoming Lines

❶ In Standard MCC Style Enclosures

Table E.3
(23...1200 A) Replacement Thermal-Magnetic Circuit Breaker

Current Rating (A)	Line Voltage	Circuit Breaker Rating	Breaker	Rating Plug
0023	208V AC, 3-Phase, 60 Hz	39	25105-265-06	N/A (40 A)
	240V AC, 3-Phase, 60 Hz	39	25105-265-04	N/A (30 A)
		40	25105-265-07	N/A (50 A)
	480V AC, 3-Phase, 60 Hz	39	25105-265-02	N/A (20 A)
		40	25105-265-04	N/A (30 A)
		41		
		42	25105-265-07	N/A (50 A)
	600V AC, 3-Phase, 60 Hz	39	25105-265-01	N/A (15 A)
		40	25105-265-02	N/A (20 A)
		41	25105-265-04	N/A (30 A)
		42	25105-265-06	N/A (40 A)
0043	208V AC, 3-Phase, 60 Hz	40	25105-265-07	N/A (50 A)
		41	25105-265-08	N/A (60 A)
	240V AC, 3-Phase, 60 Hz	41	25105-265-07	N/A (50 A)
		42	25105-265-09	N/A (70 A)
	480V AC, 3-Phase, 60 Hz	43	25105-265-07	N/A (50 A)
		44	25105-265-08	N/A (60 A)
		45	25105-265-09	N/A (70 A)
	600V AC, 3-Phase, 60 Hz	43	25105-265-07	N/A (50 A)
		44		
		45	25105-265-08	N/A (60 A)
0085	208V AC, 3-Phase, 60 Hz	42	25105-265-11	N/A (100 A)
		43	25105-265-12	N/A (125 A)
		44	25105-265-13	N/A (150 A)
	240V AC, 3-Phase, 60 Hz	43	25105-265-12	N/A (125 A)
		44	25105-265-13	N/A (150 A)
		45		
	480V Ac, 3-Phase, 60 Hz	46	25105-265-11	N/A (100 A)
		47	25105-265-12	N/A (125 A)
		48	25105-265-04	N/A (125 A)
	600V AC, 3-Phase, 60 Hz	46	25105-265-09	N/A (70 A)
		47	25104-265-11	N/A (100 A)
		48	25105-348-04	N/A (125 A)

Table E.3
(23...1200 A) Replacement Thermal-Magnetic Circuit Breaker (Continued)

0110	208V AC, 3-Phase, 60 Hz	45	25104-348-05	N/A (150 A)
		46	25104-348-06	N/A (175 A)
	240V AC, 3-Phase, 60 Hz	46	25104-348-05	N/A (150 A)
	480V AC, 3-Phase, 60 Hz	49		
	600V AC, 3-Phase, 60 Hz	49	25104-348-04	N/A (125 A)
		50	25104-348-05	N/A (150 A)
0180	208V AC, 3-Phase, 60 Hz	47	25104-348-09	N/A (250 A)
	240V AC, 3-Phase, 60 Hz	47	25104-348-06	N/A (175 A)
		48	25104-348-09	N/A (250 A)
	480V AC, 3-Phase, 60 Hz	50	25104-348-06	N/A (175 A)
		51	25104-348-09	N/A (250 A)
		52		
	600V AC, 3-Phase, 60 Hz	51	25104-348-06	N/A (175 A)
		52	25104-348-09	N/A (250 A)
0210	208V AC, 3-Phase, 60 Hz	48	25104-348-09	N/A (250 A)
	240V AC, 3-Phase, 60 Hz	49	25104-369-10	N/A (300 A)
	600V AC, 3-Phase, 60 Hz	53		
		54		
0300	208V AC, 3-Phase, 60 Hz	49	25104-369-10	N/A (300 A)
		50	25103-406-01	25107-447-04
	240V AC, 3-Phase, 60 Hz	50		
		51		25107-447-05
	480V AC, 3-Phase, 60 Hz	53	25104-369-12	N/A (400 A)
		54		
		56	25103-406-01	25107-447-05
	600V AC, 3-Phase, 60 Hz	56	25104-369-12	N/A (400 A)
		57	25103-406-01	25107-447-04

Table E.3
(23…1200 A) Replacement Thermal-magnetic Circuit Breaker (Continued)

0420	208V AC, 3-Phase, 60 Hz	51	25103-406-01	25107-447-05
		52		
	240V AC, 3-Phase, 60 Hz	52		
		53	25103-462-01	25107-456-04
	480V AC, 3-Phase, 60 Hz	57	25103-406-01	25107-447-05
		58		
	600V AC, 3-Phase, 60 Hz	58		
		59		
0630	208V AC, 3-Phase, 60 Hz	53	25103-462-01	25107-456-05
		54	25103-506-01	25107-504-04
	240V AC, 3-Phase, 60 Hz	54	25103-462-01	25107-456-05
		56	25103-506-01	25107-504-04
	480V AC, 3-Phase, 60 Hz	59	25103-462-01	25107-456-05
		60		
		61	25103-506-01	25107-504-04
	600V AC, 3-Phase, 60 Hz	60	25103-406-01	25107-447-05
		61	25103-462-01	25107-456-05
		62	25103-506-01	25107-504-04
0860	208V AC, 3-Phase, 60 Hz	56	25103-506-01	25107-504-06
	240V AC, 3-Phase, 60 Hz	57		
	480V AC, 3-Phase, 60 Hz	62		
	600V AC, 3-Phase, 60 Hz	63		
1200	208V AC, 3-Phase, 60 Hz	2033-*1200*H-57	25103-603-01	25107-604-04
		2033-*1200*H-58		25107-604-05
		2033-*1200*H-59		25107-604-06
		2033-*1200*H-60		
	240V AC, 3-Phase, 60 Hz	2033-*1200*A-58		25107-604-03
		2033-*1200*A-59		25107-604-04
		2033-*1200*A-60		25107-604-05
	480V AC, 3-Phase, 60 Hz	2033-*1200*B-66		
	600V AC, 3-Phase, 60 Hz	2033-*1200*C-66		25107-604-04

Table E.4
(23...85 A) Replacement Thermal-Magnetic Circuit Breaker

Circuit Breaker Frame Size (A)	Rating Plug (A)	Part Number
150	15	25105-265-01
	20	25105-265-02
	30	25105-265-04
	40	25105-265-06
	50	25105-265-07
	60	25105-265-08
	70	25105-265-09
	100	25105-265-11
	125	25105-265-12
	150	25105-265-13
250	125	25104-348-04

Table E.5
Replacement Control Circuit Transformer

System Rating	Line Voltage	Control Transformer Part No.
23…85 A	208V/60 Hz	1497-F-HXDX-0-N
	240V 60 Hz / 220V 50 Hz	1497-F-BASX-0-N
	380…400V 50 Hz	1497-F-M4-0-N
	400…415V 50 Hz	1497-F-M4-0-N
	480V 60 Hz / 440V 50 Hz	1497-F-BASX-0-N
	500V 50 Hz	1497-Custom
	600V 60 Hz / 550V 50 Hz	1497-F-CXSX-0-N
110 A … 1200 A	208V 60 Hz	1497-H-HXDX-0-N
	240V 60 Hz / 220V 50 Hz	1497-H-BASX-0-N
	380…400V 50 Hz	1497-H-M4-0-N
	400…415V 50 Hz	1497-H-M4-0-N
	480V 60 Hz / 440V 50 Hz	1497-H-BASX-0-N
	500V 50 Hz	1497-H-MXDX-0-N
	600V 60 Hz / 550V 50 Hz	1497-H-CXSX-0-N

Table E.6
Replacement Pilot Devices (for Power Panel Door)

For Type 1, 4, 12 or IP30, IP54 Enclosure	
Function	**Part Number**
“System On” Pilot Light	800T-PT16R
“System Ground Connected” Pilot Light	800T-PT16G
“System On” Push button	800T-A1D1
“System Off” Push button	800T-B6D2
“Coast-To-Stop” Push-Pull Operator	800T-FXT9A5
For Type 4X or IP65 enclosure, change from Bulletin 800T- to 800H- in the Part No.	

Replacement Control Modules

The Control Module is factory-sealed to maintain the integrity of the safety system. Order as follows:

Table E.7
Replacement Control Modules

Control Module Description	Part Number
No optional functions	2030-CH1200⊗ OR 2030-CH0085⊗
Pneumatic Ready	2030-CH1200⊗-1PN OR 2030-CH0085⊗-1PN
With 30 second factory set time delay	2030-CH1200⊗-1TD OR 2030-CH0085⊗-1 TD
Pneumatic Ready with 30 second factory set time delay	2030-CH1200⊗-1PN-1TD OR 2030-CH0085⊗-1PN-1TD
⊗ Part no. is incomplete as shown. Select the required line voltage code letter from the chart below	

⊗Input Line Voltage Code

The part number as listed is incomplete. Select an Input Line Voltage Code from the table below. Example: Part No. 2030-CH1200⊗ becomes Part No. 2030-CH1200B for a 480V, 60 Hz, 3∅ input line voltage application.

Table E.8
Input Line Voltage Code for Control Modules.

Input Line Voltage	⊗ Input Line Voltage Code
220…240V 50…60 Hz, 3∅	A
440…480V 50…60 Hz, 3∅	B
550…600V 50…60 Hz, 3∅	C
400…415V 50 Hz, 3∅	G
208V 60 Hz, 3∅	H
500V 50 Hz, 3∅	M
380…400V 50 Hz, 3∅	N

Replacement Remote Lockout Station System Isolated Light LED Lamps

If the LED lamp in the System Isolated light is burned out, it can be ordered as follows:

Table E.9
LED Lamps

Description	Color	Part No.
LED lamp for System Isolated light	White	800T-N319A
	Green	800T-N319G

Replacement Remote Lockout Station Load Switch Assemblies

If the switch assembly in the remote lockout station needs to be replaced, it can be ordered as follows:

Table E.10
Replacement Remote Lockout Station Switch Assemblies

Function	Part No.
Switch Assembly	2030-RSA1

Glossary

Category 4: The most stringent safety category identified within International Standard EN 954-1/ISO 13849-1. In order to achieve a Category 4 rating, the system design must be such that a single fault does not lead to the loss of the safety function and the accumulation of faults shall be prevented.

Control Module: ElectroGuard® SIS assembly housing the power supply, safety relays, safety control relays, voltage sensing relays, and terminal blocks/ connector plugs required for the RLS ports supported by the Control Module and system interconnections. The Control Module can communicate status information regarding the overall system status, the status of each RLS, and the status of the optional Pneumatic Isolation Module.

Control Module with Time Delay: Control module featuring an adjustable 30-second time delay for applications where the machine or process requires a controlled stop.

Connection Point: The location where a wire is terminated (see Figure F.1).

Figure F.1
Wiring Nomenclature

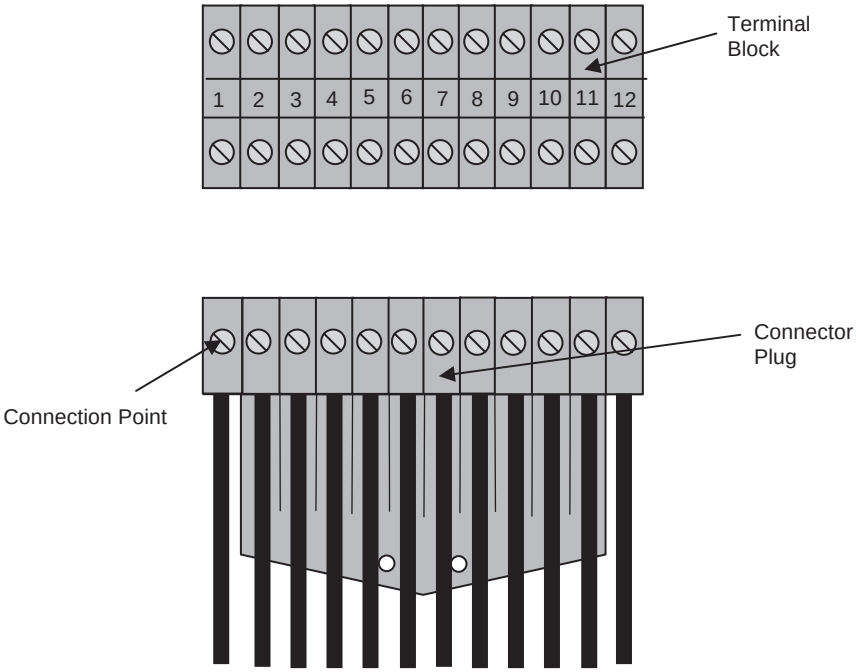

Connector Plug: A removable plug that includes the connection point for one or more wires. The connector plug is inserted into a stationary terminal block to complete the circuit connection (see Figure F.1).

DeviceNet Communication Module: Allen-Bradley Flex modules used to communicate status information from the ElectroGuard® SIS Control Module to a remote PLC or other device via a communication protocol.

Dual RLS: Rotary operated, enclosed switch with two system Isolated verification lights and an operating handle that can be locked in the OFF position to provide Lockout/Tagout. The dual Remote Lockout Station is used to initiate the isolation sequence simultaneously in separate ElectroGuard® units by sending signals to each Control Module.

ElectroGuard®: The Allen-Bradley trademarked name used to identify the Bulletins 2030, 2031, 2032, and 2033 family of SIS products.

ElectroGuard® Power Panel: Enclosure housing the Control Module, isolation contactors, grounding contactor, dedicated control transformer, the optional branch circuit protection, and status Communication Modules.

Expansion Module: ElectroGuard® SIS module used in applications requiring more than the maximum number of RLSs for an ElectroGuard® Control Module (four for 23...85 A, six for 110...1200 A), or where the total wire lengths for the RLSs supported by the Control Module has been exceeded. The Expansion Module is available with four or ten ports, as open type or enclosed.

Expansion Module with Time Delay: An Expansion Module featuring an adjustable 1…30 second time delay for applications where the machine or process requires a controlled stop.

Grounding Contactor (GC): Power contactor housed in the ElectroGuard® power panel that grounds any residual voltages or back-EMF from the machine.

Isolation Contactors (1IC and 2IC): Power contactors housed in the ElectroGuard® power panel that isolate the electrical energy to the machine. Two contactors are used for redundancy. The isolation contactors and grounding contactor are electrically and mechanically interlocked.

Lockout/Tagout (LOTO): The process of isolating the energy source to the machine or process and placing a padlock on the operating handle of the isolation device in order to help prevent someone from inadvertently turning the energy sources back on. LOTO has been a requirement in Occupational Safety Hazards Act (OSHA) since 1990.

Pneumatic Isolation Module: ElectroGuard® SIS module used in applications requiring the isolation of the electrical and pneumatic energy to the machine or process. The Pneumatic Isolation Module is to be used only with an ElectroGuard® SIS that is ordered pneumatic-ready.

Power Contactor Assembly: The assembly consisting of the two isolation contactors (1IC) and (2IC), the grounding contactor (GC), their associated interlocks, and control and power wires.

Qualified ElectroGuard® Service Technician: A technician who has been trained by Allen-Bradley personnel on the proper servicing procedures for the SIS. The names of all authorized ElectroGuard® service technicians are entered into Allen-Bradley's database after successful completion of training.

Remote I/O Communication Module: Allen-Bradley Flex modules used to communicate status information from the ElectroGuard® SIS Control Module to a remote PLC or other device via the Remote I/O communication protocol.

Remote Lockout Station (RLS): Rotary-operated, enclosed switch with System Isolated verification light and operating handle that can be padlocked in the OFF position to provide Lockout/Tagout. The RLS initiates the isolation sequence via the Control Module after the machine operator uses the proper stopping means of the machine or process.

Safety Isolation System (SIS): Used to describe the functionality of the Bulletins 2030, 2031, 2032, and 2033 family of products. In this publication, this term is used primarily to indicate the entire ElectroGuard® family of products.

System Isolated Light: The light that illuminates on the RLS to indicate that the energy fed through the ElectroGuard® SIS to the machine or process has been isolated. If the RLS System Isolated light does not illuminate, service personnel must not begin work on the machine or process.

Tamper-indicating seal: To protect the integrity of the SIS design, critical modules are originally sealed at the factory for tamper-resistance. A qualified ElectroGuard® service technician may reseal the modules using tamper-indicating seals and following the recommission directions.

The RLSs must be sealed with a wire seal by the end user after commissioning.

Terminal Block: A stationary wiring block that includes the connection points for one or more wires. The terminal block may or may not be designed to accept a connector plug (see Figure F.2).

Figure F.2
Terminal Block

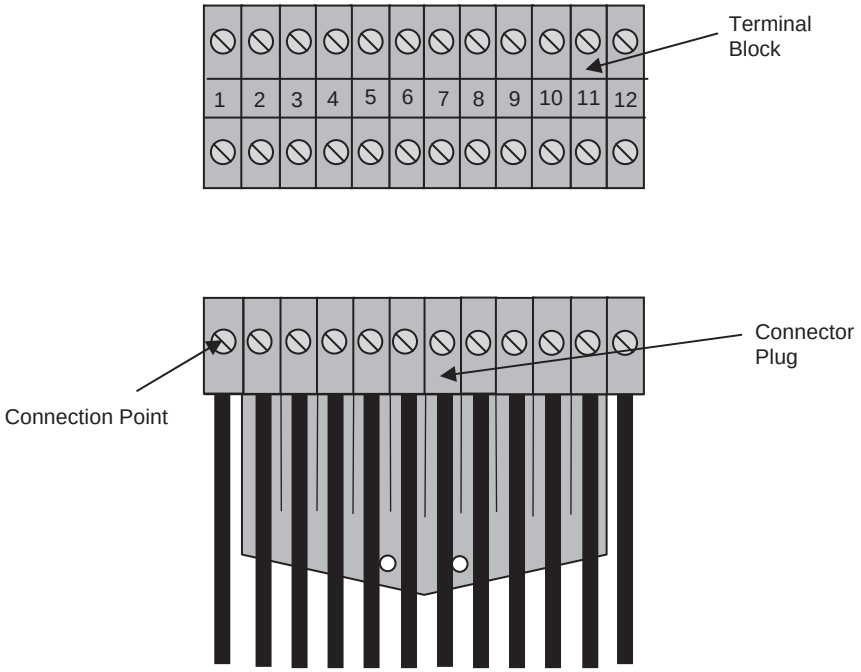

Verification Module: Optional add-on module for the ElectroGuard® SIS that links a customer-supplied remote device to the ElectroGuard® Control Module. The Verification Module provides a set of redundant contacts to the remote device that close when the ElectroGuard® system has safely isolated energy to the machine or process. The Verification Module can also monitor the state of the remote device and not reapply energy until the remote device is in the proper state. The Verification Module uses a standard RLS port on a Control Module or Expansion Module and its safety outputs are analogous to an RLS System Isolated light.

Product Information Labels

Product Safety Labels

Figure G.1 Hazardous Voltage, Part Number. 31035-090-01

Figure G.2 Hazardous Voltage Part Number. 31035-091-01

Figure G.3 Pneumatic Energy Present Part Number. 31035-092-01

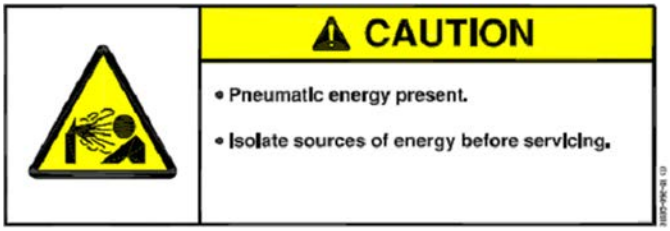

Figure G.4 Heavy Object Part Number. 31035-093-01

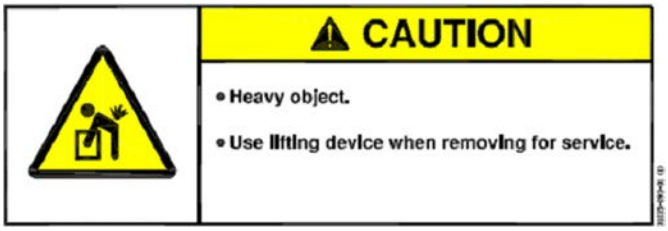

Figure G.5 Heavy Object Part Number. 31035-094-01

Product Information Labels

Figure G.6 Tamper-indicating Seal, Part Number 32005-383-02

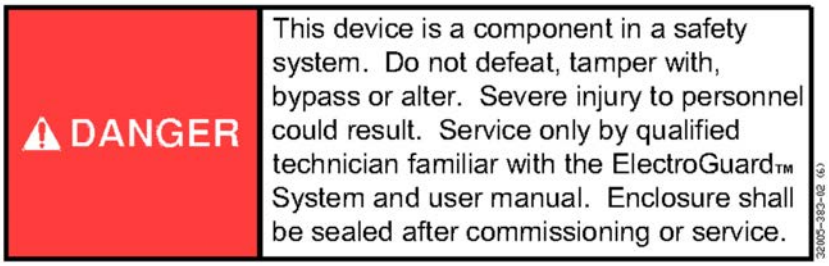

Figure G.7 Tamper-indicating Seal, Part Number 32005-384-02

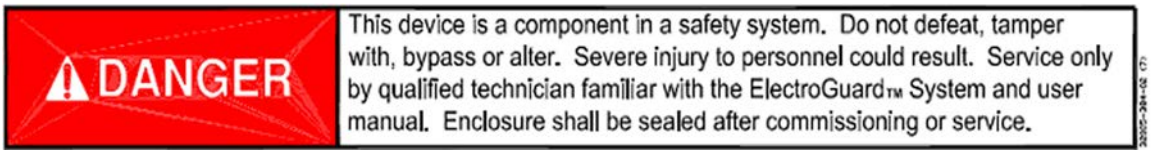

Figure G.8 Factory Seal Part Number. 32005-386-02 (on modules shipped from the factory)

Figure G.9 Seal Part Number 32005-386-03 (modules repaired by Rockwell repair facilities or field service personnel)

Figure G.10 Seal Part Number 32005-386-04 (modules serviced by non-Rockwell personnel)

32005-386-04 (4)

Safety Isolation System

System integrity may be compromised if seal is broken.

Serial No.: _____

Wiring Diagram: Y- _____

Line Voltage: _____ volts

Phase: _____ Frequency: _____ Hz

Control Voltage:

_____ volts, _____ Hz & 24 Volts DC

Test by: _____

Date: _____

Trademark List

ElectroGuard® is a registered trademark and Flex is a trademark of Rockwell Automation.

DeviceNet and the DeviceNet logo are trademarks of the Open Device Vendors Association (ODVA).

Teflon® is a registered trademark of E.I. du Pont de Nemours and Co.

CrossMirror® is a registered trademark of ROSS CONTROLS®

www.rockwellautomation.com

Power, Control and Information Solutions Headquarters

Americas: Rockwell Automation, 1201 South Second Street, Milwaukee, WI 53204-2496 USA, Tel: (1) 414.382.2000, Fax: (1) 414.382.4444
Europe/Middle East/Africa: Rockwell Automation NV, Pegasus Park, De Kleetlaan 12a, 1831 Diegem, Belgium, Tel: (32) 2 663 0600, Fax: (32) 2 663 0640
Asia Pacific: Rockwell Automation, Level 14, Core F, Cyberport 3, 100 Cyberport Road, Hong Kong, Tel: (852) 2887 4788, Fax: (852) 2508 1846

Publication 2030-UM003A-EN-P May 2006

Copyright ©2006 Rockwell Automation, Inc. All Rights Reserved. Printed in USA.