ALLEN-BRADLEY

1791 Analog Block I/O Input/Output Modules

User Manual

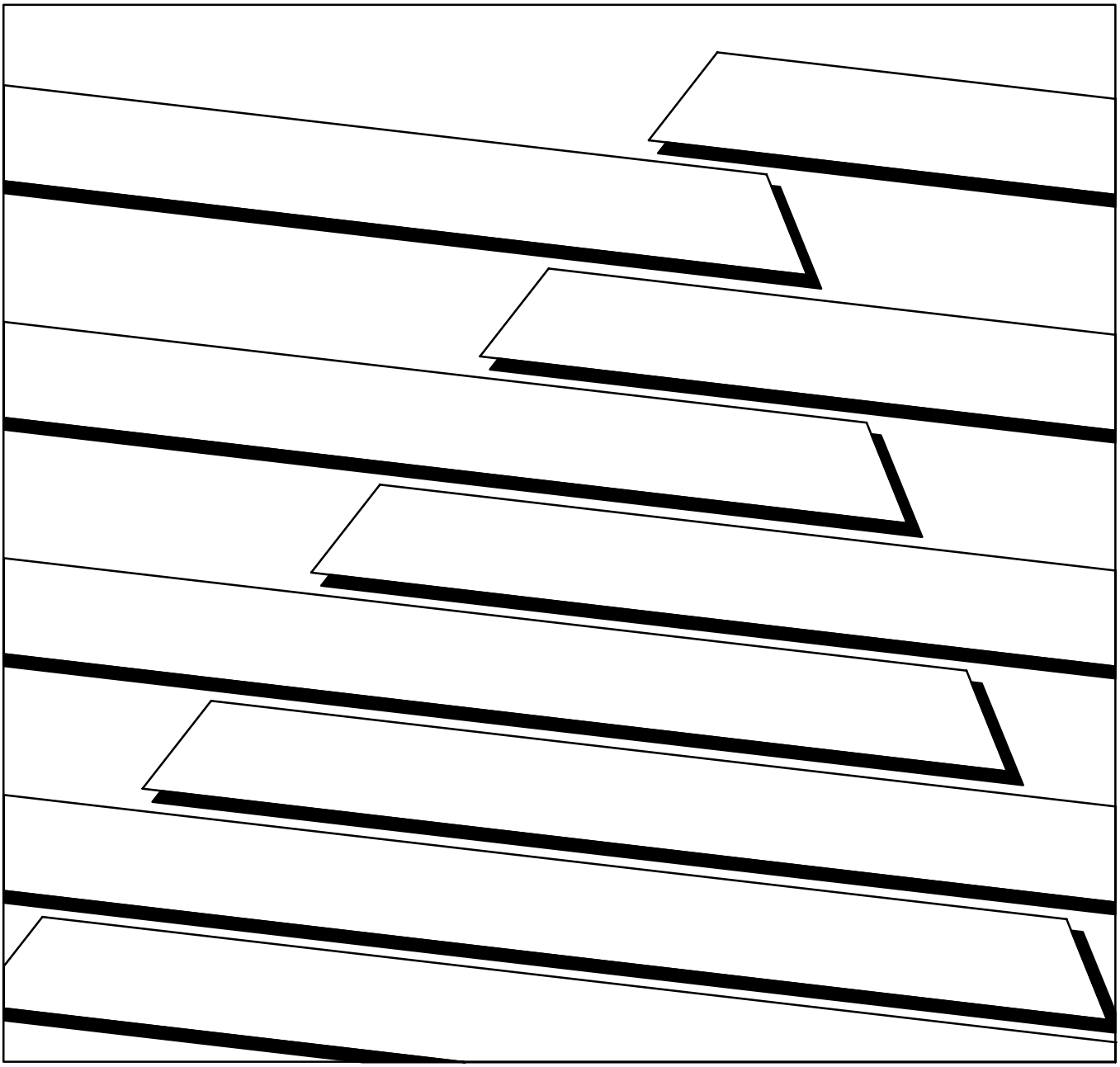

Important User Information

Because of the variety of uses for the products described in this publication, those responsible for the application and use of this control equipment must satisfy themselves that all necessary steps have been taken to assure that each application and use meets all performance and safety requirements, including any applicable laws, regulations, codes and standards.

The illustrations, charts, sample programs and layout examples shown in this guide are intended solely for example. Since there are many variables and requirements associated with any particular installation, Allen-Bradley does not assume responsibility or liability (to include intellectual property liability) for actual use based upon the examples shown in this publication.

Allen-Bradley publication SGI–1.1, “Safety Guidelines For The Application, Installation and Maintenance of Solid State Control” (available from your local Allen-Bradley office) describes some important differences between solid-state equipment and electromechanical devices which should be taken into consideration when applying products such as those described in this publication.

Throughout this manual we make notes to alert you to possible injury to people or damage to equipment under specific circumstances.

ATTENTION: Identifies information about practices or circumstances that can lead to personal injury or death, property damage or economic loss.

Attention helps you:

- Identify a hazard
- Avoid the hazard
- recognize the consequences

Important: Identifies information that is critical for successful application and understanding of the product.

Important: We recommend you frequently backup your application programs on appropriate storage medium to avoid possible data loss.

Summary of Changes

Summary of Changes

This release of the publication contains new and updated information from the last release.

New Information

This release includes information on new block I/O modules now available. This information was not included in the previous release of this publication. The modules are:

- 1791-NDV – 24V dc Analog Block I/O (voltage outputs)
- 1791-NDC – 24V dc Analog Block I/O (current outputs)

Updated Information

Generally, change bars (as shown to the right of this paragraph) are used to show new or significantly revised copy. Certain additions, such as adding octal numbering or corrected typographical errors, are not shown by change bars.

Table of Contents

Using This Manual

Purpose of Manual

This manual shows you how to use your block I/O with an Allen-Bradley programmable controller. It helps you:

- install your module
- program your module
- troubleshoot your module

Audience

You must be able to program and operate an Allen-Bradley programmable controller (PLC) to make efficient use of block I/O modules.

We assume that you know how to do this in this manual. If you do not, refer to the appropriate PLC programming and operations manual before you attempt to program this module.

Vocabulary

In this manual, we refer to:

- the block I/O module as the “block” or the “module”
- the programmable controller as the “controller” or “processor”

Manual Organization

This manual is divided into eight chapters. The following chart shows each chapter with its corresponding title and brief overview of the topics covered in that chapter.

Chapter	Title	Topics Covered
1	Introducing Block I/O	Description of the modules, including general and hardware features
2	Installing Block I/O	Module power requirements, location, and wiring information
3	Configuring Your Block I/O for PLC Family Programmable Controllers	How to set the configuration switches and address the block I/O
4	Analog Block Applications using Block Transfers	How to use block transfer programming with your block I/O
5	Analog Block Applications using Discrete Transfers	How to use discrete transfer with your block I/O
6	Programming Your Analog Block I/O Module	Programming examples for analog block I/O and PLC family controllers
7	Module Calibration	How to calibrate analog block I/O
8	Troubleshooting	How to use the indicators to troubleshoot your block I/O module
Appendix A	Specifications	Specifications for the block I/O modules

Block I/O Products Covered by this Publication

This publication covers the following analog block I/O products:

Catalog Number	Power Supply Voltage	Inputs	Outputs	Description
1791-N4V2	120V ac	4	2	analog – 4 input, 2 voltage output
1791-N4C2	120V ac	4	2	analog – 4 input, 2 current output
1791-NDV	24V dc	4	2	analog – 4 input, 2 voltage output
1791-NDC	24V dc	4	2	analog – 4 input, 2 current output

Related Publications

For a list of publications with information on Allen-Bradley products, consult our publication index (SD499).

Chapter 1

Introducing Block I/O

Chapter Objectives

In this chapter, you will learn what analog block I/O is, its features, and how it functions.

General Description

Block I/O consists of small, self-contained remote I/O devices complete with power supply, programmable controller interface, input/output connections and signal conditioning circuitry. Table 1.A is a list of block I/O modules covered in this publication.

Table 1.A
Types of Block I/O

Catalog Number	Power Supply Voltage	Inputs	Outputs	Description
1791-N4V2	120V ac	4	2	analog – 4 input, 2 voltage output
1791-N4C2	120V ac	4	2	analog – 4 input, 2 current output
1791-NDV	24V dc	4	2	analog – 4 input, 2 voltage output
1791-NDC	24V dc	4	2	analog – 4 input, 2 current output

The analog blocks are compatible with PLC-2®, PLC-3®, PLC-5/250® and PLC-5® family programmable controllers, and the SLC® 5/02 (or greater) modular controllers. Refer to the table below for information on using block I/O with various Allen-Bradley programmable controllers.

If You are Using:	You must use:
PLC-2 family programmable controller	1771-SN sub-I/O scanner or 1772-SD and -SD2 remote I/O scanners
PLC-3 family programmable controller	Block attaches directly to controller
PLC-5 family programmable controller	
PLC-5/250 programmable controller	
SLC 500 programmable controller	1747-SN remote I/O scanner

The analog blocks communicate via block transfer or discrete transfer with any Allen-Bradley programmable controller that connects to the remote I/O network. The analog blocks communicate with SLC family controllers using discrete transfer.

Each analog block has four independent inputs, which can be configured as either all voltage inputs or all current inputs. The block contains a 24V dc current limited voltage source for accommodating loop-powered current transducer inputs.

Analog block outputs are configured at the factory for either a current output or a voltage output. Outputs are not user-configurable.

Figure 1.1 shows the physical features of the block I/O.

Figure 1.1
Major Features of the Analog Block I/O Modules (1791-N4V2 shown)

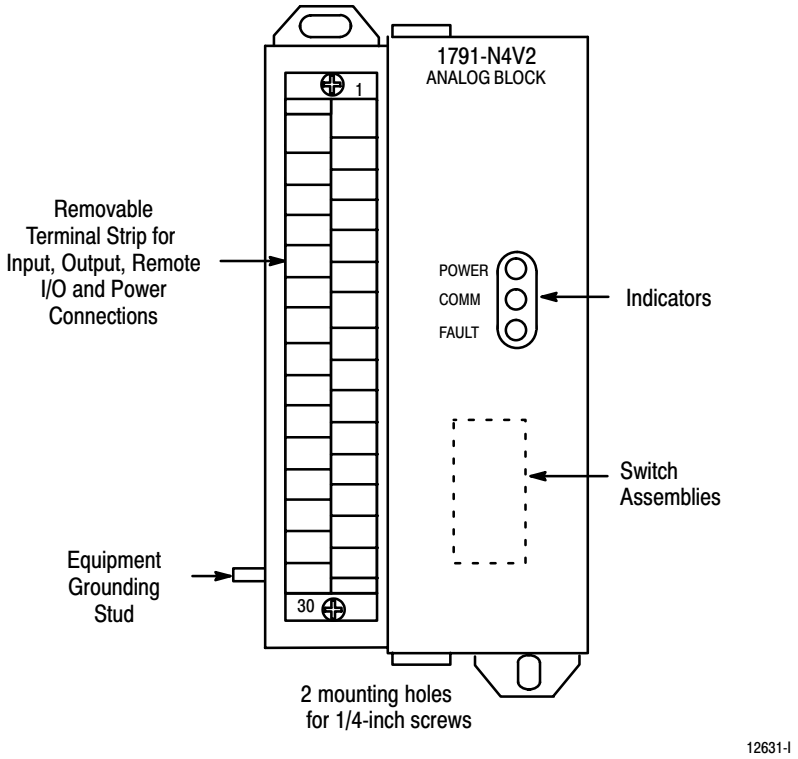

Terminal Strip - Remote I/O link, power and input/output connections are made to the removable terminal strip for easy connection of wiring.

Switch Assembly - The modules contain two switch assemblies. Use these assemblies to make the following settings:

- I/O rack number
- starting I/O group
- communication rate
- last I/O group
- last state
- transfer type
- processor restart/lockout

Status Indicators - Indicators display the status of module power, communication and fault. Use these indicators to help in troubleshooting.

How Block I/O Fits in a PLC System

Block I/O is a complete I/O interface that includes the functionality of the I/O rack, adapter, power supply, and I/O module in a single unit. Connect sensors and actuators to the module and use the remote I/O cable to connect the block I/O to your programmable controller.

Connect the block I/O to your remote I/O link as you would any other device. Input and output data is scanned asynchronously and transferred back and forth between the block and the programmable controller using either block transfer or discrete transfer. When using block transfer (Figure 1.2), the block looks like a 1/4 I/O rack to the processor (two words of input image table memory and two words of output image table memory). Block transfer provides the most efficient use of your data table image memory, and allows access to all implemented user functions of the block.

Figure 1.2
Block I/O Connection in a PLC System using block transfer

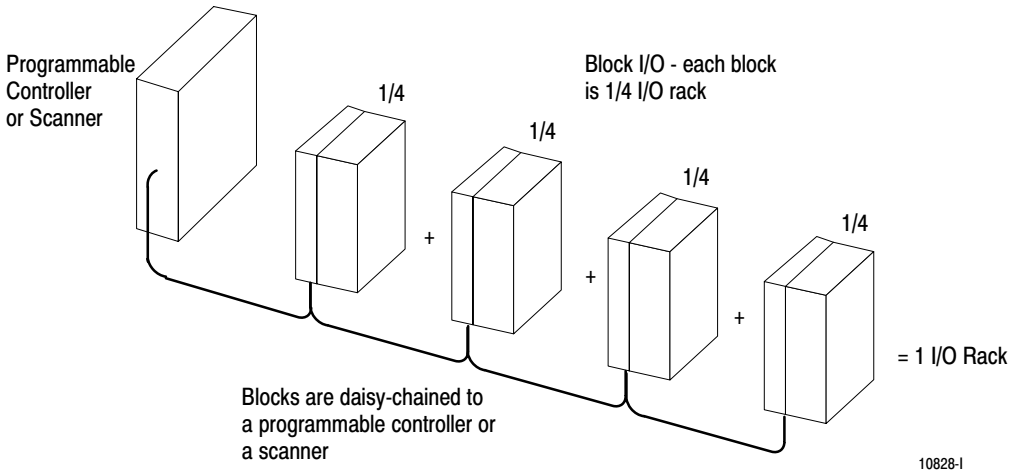

Discrete transfer (Figure 1.3) is intended to be used with controllers which do not have block transfer capability. However, discrete transfer can be used with any PLC family controller. When using discrete transfer, the block looks like a 1/2 I/O rack to the controller (four words of input image table memory and four words of output image table memory). Note that certain alarms and user scaling features are not available when using discrete transfer.

Figure 1.3
Block I/O Connection in an SLC System using discrete transfer

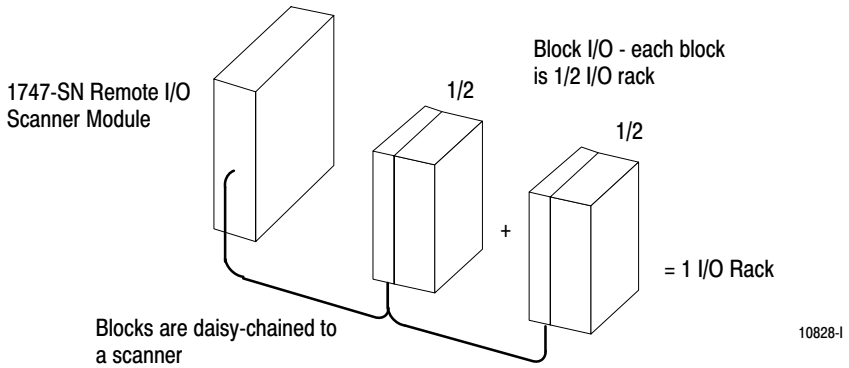

Inputs

A simplified schematic of the input circuit of one input channel is shown below.

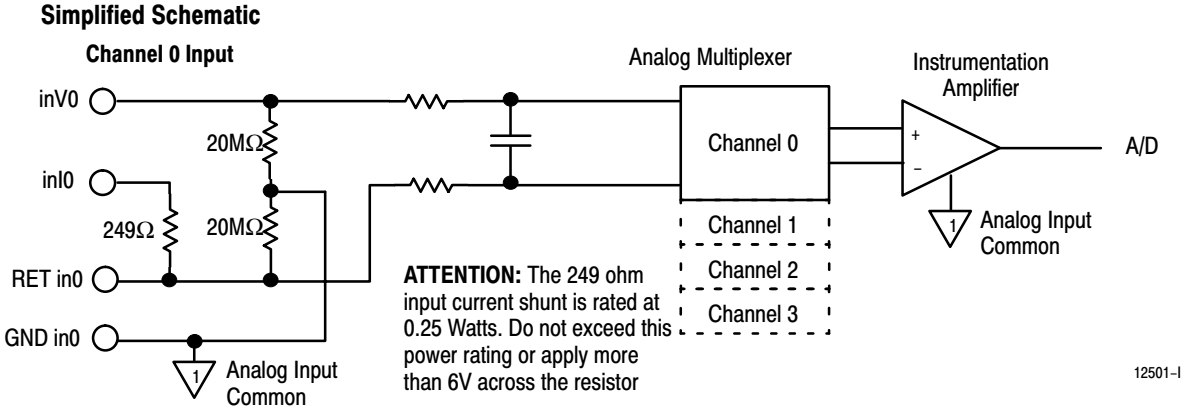

Inputs have selectable input ranges as shown below.

Application	Input Range	Resolution
voltage	±10V	14 Bits
voltage or current	±5V	14 Bits
voltage	0 to 10V	14 Bits
voltage or current	0 to 5V	14 Bits

Voltage Input

Voltage inputs can be either single-ended or differential. In the voltage mode, a signal applied between inV0 and the combination of RET in0 shorted to GND in0 provides a single-ended input mode. A signal applied between inV0 and RET in0 provides a differential input mode. The four terminals for ground are internally connected together to form the analog input common. In either input mode (single-ended or differential) the common mode voltage between any input terminal and analog input common cannot exceed 11V or unreliable operation will occur. The figures below show examples of differential input mode and single-ended input mode.

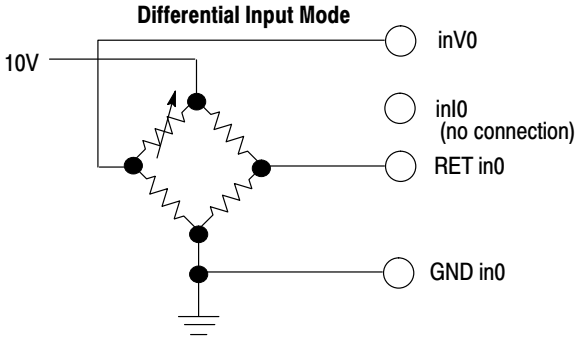

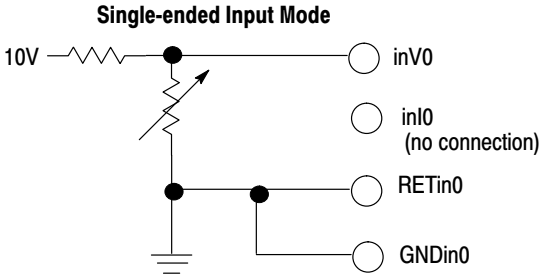

Current Input

When using the 0–5V or ±5V range, an internal precision 249Ω shunt is provided on each input. Input current is measured when the I_{IN} and V_{IN} terminals are connected together. To get the proper input voltages, you must indicate that the current shunt is connected when you configure the module at powerup. A +24V power supply is provided for two-wire current transducers.

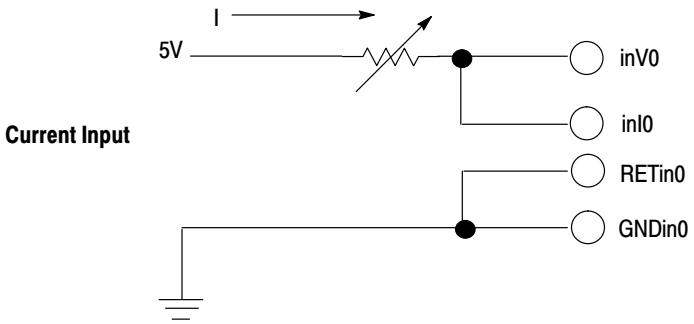

Each range setting has a margin of 2.5% to allow for compensation of system or calibration inaccuracies.

This is illustrated using the ±10V scale below:

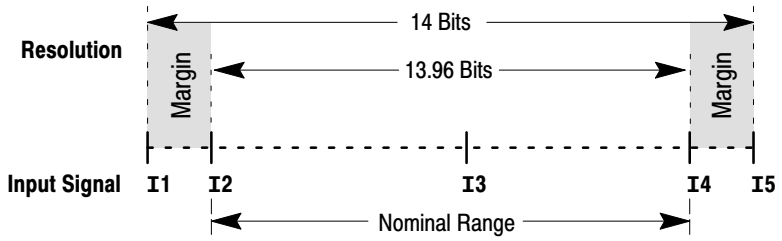

In the above scale, input signals 1 thru 5 produce corresponding internal analog to digital converter (ADC) binary counts. A full scale (FS) voltage input produces an internal count of 16383 (input signal 1), while a bottom scale (BS) voltage input produces an internal count of 0000 (input 5). During calibration, the module's representation of the counts are adjusted so a voltage of nominal full scale (NFS) will produce a count shown as input signal 2 while the nominal bottom scale voltage (NBS) produces a count shown as input signal 4. For each range scale, the input voltage which produces the ADC count of input signals 1 thru 5 in the above scale are shown below:

Input Signal	+/–10V	0–10V	+/–5V	0–5V
I1	10.25V (FS)	10.25V (FS)	5.125V (FS)	5.125V (FS)
I2	+10.000V (NFS)	10.00V (NFS)	5.000V (NFS)	5.000V (NFS)
I3	0.000V	5.00V	0.000V	2.500V
I4	–10.000V (NBS)	0.00V (NBS)	–5.000V (NBS)	0.000V (NBS)
I5	–10.25V (BS)	–0.25V (BS)	–5.125V (BS)	–0.125V (BS)

Scaling

The input data represented at the module is always the internal ADC binary counts scaled by values set in the maximum (S_{max}) and minimum (S_{min}) scaler value using a two point scaling method. The input voltage which produces input signal 2 (V_{nfs}) is always equal to S_{max}, and voltage of input signal 4 (V_{nbs}) is equal to S_{min} as shown below:

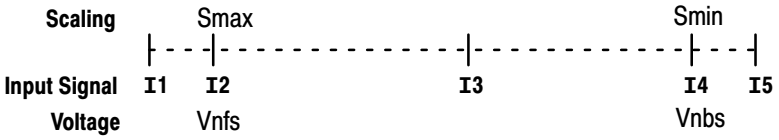

The following equation shows how the module interprets the input data:

$$\text{Module data} = M \times V_{in} + B$$

where:

$$M = \frac{(S_{max} - S_{min})}{(V_{nfs} - V_{nbs})}$$

$$B = \frac{(S_{min} \times V_{nfs}) - (S_{max} \times V_{nbs})}{(V_{nfs} - V_{nbs})}$$

You can choose one of three scaling methods:

- binary counts (module sets scalers)
- default scaling (module sets scalers)
- user scaling (you set scalers)

User scaling is not available when you select discrete transfer mode.

Binary Counts Scaling

Binary counts scaling mode activates when the module powers up. This mode guarantees the maximum resolution. The module sets the scalers as shown in the following table:

Scaler	+/–10V	0–10V	+/–5V	0–5V
S_{max}	8191	16383	8191	16383
S_{min}	–8192	0	–8192	0

Default Scaling

Default scaling mode scales inputs to the input stimulus in either millivolts or microamps. The module sets the scalers as shown in the following tables:

With Voltage Input Selected

Scaler	+/–10V	0–10V	+/–5V	0–5V
S_{max}	10,000mV	10,000mV	5000mV	5000mV
S_{min}	–10,000mV	0mV	–5000mV	0mV

With Current Input Selected

Scaler	+/–10V	0–10V	+/–5V	0–5V
S_{max}	N/A	N/A	20000uA	20000uA
S_{min}	N/A	N/A	–20000uA	0uA

User Scaling

User scaling is available only when using the block transfer mode. This mode allows you to define S_{max} and S_{min} in engineering units in the block transfer write data table. The integer range is 32,767 to –32,768.

Important: If the range of user scaling values is set less than the range of binary counts scaling values, input resolution is sacrificed.

Scaling Example

Using the ±10V range scale, the following illustration shows five possible input signals.

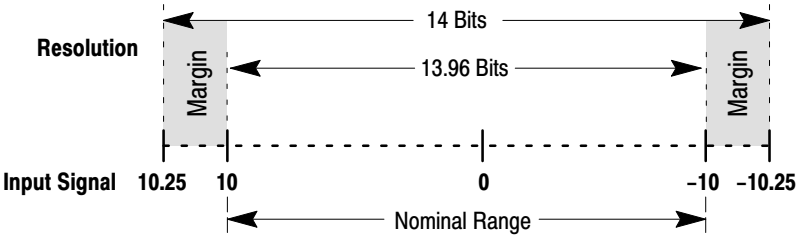

The following table shows how the five signals will be scaled using each of the three scaling methods. In the user scaling column, the S_{max} was set to represent 5000 and the S_{min} was set to represent 0.

Input Value	Scaling Method		
	Binary Counts	Default	User
Approx. +10.25V	8395	10250	5062
+10.000V	8191	10000	5000 (Smax)
0.000V	0000	00000	2500
–10.000V	–8192	–10000	0000 (Smin)
Approx. –10.25V	–8396	–10250	–0062

Outputs

The type of output your block I/O module has depends on its catalog number:

- 1791-N4V2 and 1791-NDV have two ±10V voltage outputs
- 1791-N4C2 and 1791-NDC have two 0-20mA current outputs

For any of the above modules, if your program tries to write a value which is outside the output range, the output will be clamped at either the maximum or minimum value. This condition will be indicated in the block transfer read status word.

Voltage Outputs – 1791-N4V2 and 1791-NDV

A simplified schematic of a ±10V output channel is shown below.

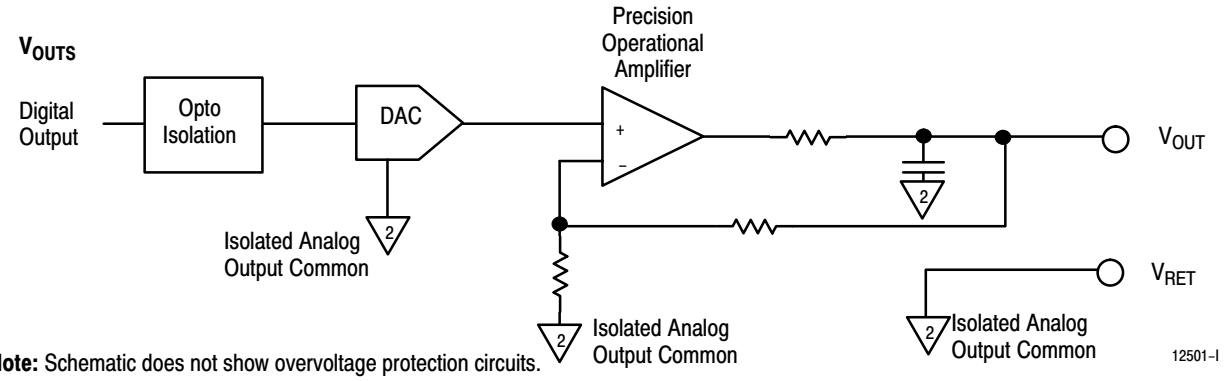

Note: Schematic does not show overvoltage protection circuits.

The ±10V output provides 14 bits of resolution and is capable of driving loads as small as 1k ohm. The output sacrifices a small amount of the resolution to provide a margin of 2.5% to allow for system or calibration inaccuracies as shown below.

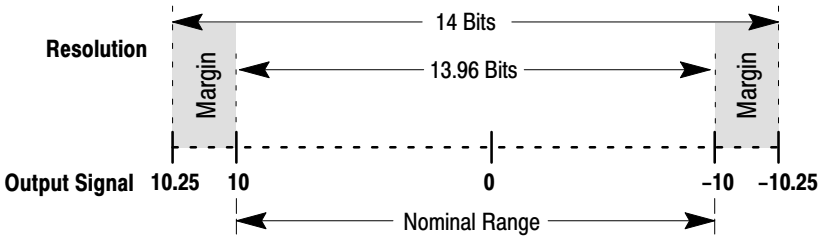

Scaling

The digital data sent to the output is always scaled by the values set in the maximum (S_{max}) and minimum (S_{min}) scaler values using a two point scaling method. When digital data sent equals S_{max}, the output produces +10.000V and the digital data sent equals S_{min}, the output produces –10.000V. The following equations shows this relationship:

```
Vout = M x Module Data + B
where:
```

$$M = \frac{20V}{(Smax - Smin)}$$

$$B = \frac{10 \times (Smax + Smin)}{(Smax - Smin)}$$

You can choose one of three scaling methods:

- binary counts
- default scaling
- user scaling

User scaling is not available when you select discrete transfer mode.

The following table shows the output signals produced by various module data values entered in each of the three scaling methods. In the user scaling column, S_{max} was set to 5000 and S_{min} was set to 0000.

Output Signal	Module Data		
	Binary Counts Scaling	Default Scaling	User Scaling
Approx. +10.25V	8395	10250	5062
+10V	8191	10000	5000 (Smax)
0.000V	0000	00000	2500
–10.00V	–8192	–10000	0000 (Smin)
Approx. –10.25V	–8396	–10250	–0062

Current Outputs – 1791-N4C2 and 1791-NDC

A simplified schematic of a 0 to 20mA output channel is shown below.

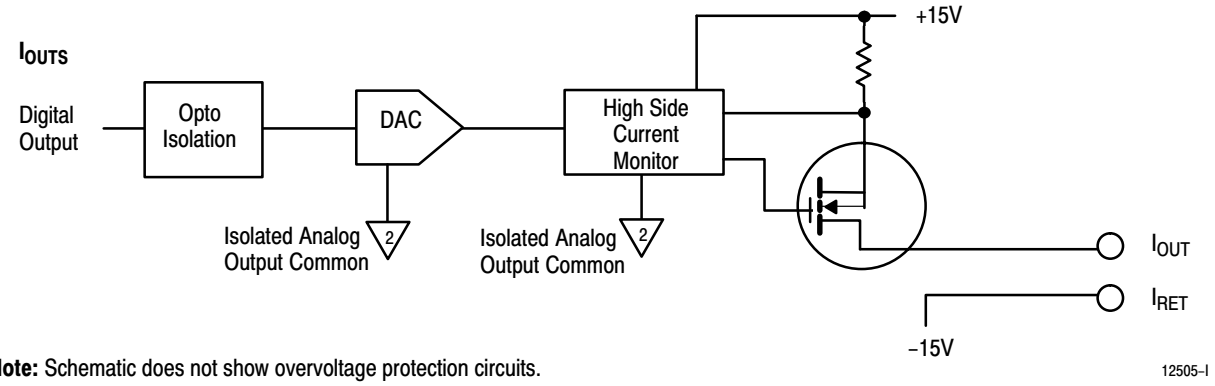

Note: Schematic does not show overvoltage protection circuits.

The 0 to 20mA output provides 13 bits of resolution and is capable of driving loads as large as 1k ohm.

The output sacrifices a small amount of the resolution to provide a margin of 2.5% to allow for system or calibration inaccuracies as shown below.

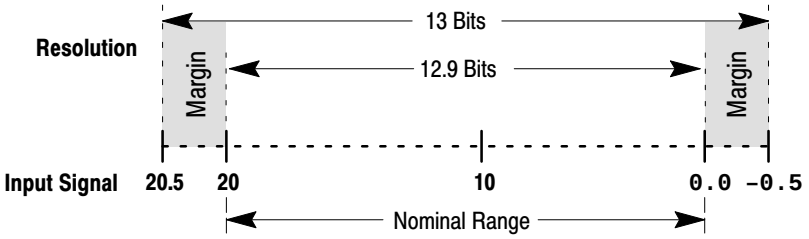

Scaling

The digital data sent to the output is always scaled by the values set in the maximum (S_{max}) and minimum (S_{min}) scaler values using a two point scaling method. When digital data sent equals S_{max}, the output produces 20.000mA and the digital data sent equals S_{min}, the output produces 0.000mA. The following equations shows this relationship:

$$\text{Iout} = M \times \text{Module Data} + B$$

where:

$$M = \frac{20\text{mA}}{(\text{Smax} - \text{Smin})}$$

$$B = \frac{20\text{mA} \times (\text{Smax} + \text{Smin})}{(\text{Smax} - \text{Smin})}$$

You can choose one of three scaling methods:

- binary counts
- default scaling
- user scaling

User scaling is not available when you select discrete transfer mode.

The following table shows the output signals produced by various module data values entered in each of the three scaling methods. In the user scaling column, S_{max} was set to 5000 and S_{min} was set to 0000.

Output Signal	Module Data		
	Binary Counts Scaling	Default Scaling	User Scaling
Nominally +20.5mA	8395	10250	5062
20.000mA	8191	10000	5000 (Smax)
0.000mA	0000	00000	2500 (Smin)
Nominally –0.5mA[1]	–0396	–00050	–2437

[1] The actual output can never go negative. However, some of the output range is used to allow for zero offset compensation.

Chapter 2

Installing Block I/O

Chapter Objectives

In this chapter, you will learn how to mount the block, connect the remote I/O link, connect the input and output wiring to the block, and terminate the remote I/O link.

Pre-installation Considerations

Before installation, you must determine the:

- scanner/processor to use
- number of blocks on your network
- throughput requirements
- total distance of the installation
- transmission rate desired
- external fuses required (if any)

Acceptable combinations are shown in Table 2.A.

Table 2.A
Acceptable Combinations of Processor and Block I/O

When using	and	Maximum Capacity	Baud Rate Used	Maximum Network Distance
PLC-2 family	1771-SN	14 blocks with 150 ohm terminator and discrete transfer	57.6K	10,000 cable-feet
			115.2K	5,000 cable-feet
	1772-SD, 1772-SD2	16 blocks/channel, 28 blocks/scanner with 150 ohm terminator	57.6K	10,000 cable-feet
			115.2K	5,000 cable-feet
PLC-3 family	Any PLC-3 scanner module	16 blocks/channel, 64 blocks/scanner with 150 ohm terminator. 128 blocks with 2 scanners and 150 ohm terminator.	57.6K	10,000 cable-feet
			115.2K	5,000 cable-feet
	1775-S5, or -SR5 module	32 blocks/channel, 64 blocks/scanner with 82 ohm terminator. 128 blocks with 2 scanners, 82 ohm terminator and extended node addressing.	57.6K	10,000 cable-feet
			115.2K	5,000 cable-feet
			230.4K	2,000 cable-feet
PLC-5 family	PLC-5VME (6008-LTV)	4 blocks with 150 ohm terminator	57.6K	10,000 cable-feet
	PLC-5/11	4 blocks with 150 ohm terminator	57.6K	10,000 cable-feet
			115.2K	5,000 cable-feet
			230.4K	2,500 cable-feet

When using	and	Maximum Capacity	Baud Rate Used	Maximum Network Distance
PLC-5 family (continued)	PLC-5/15[1]	12 blocks with 150 ohm terminator	57.6K	10,000 cable-feet
	PLC-5/20	12 blocks with 82 ohm or 150 ohm terminator	57.6K	10,000 cable-feet
			115.2K	5,000 cable-feet
			230.4K	2,500 cable-feet
	PLC-5/25[2]	16 blocks with 150 ohm terminator, 28 blocks with 82 ohm terminator and extended node addressing	57.6K	10,000 cable-feet
	PLC-5/30	16 blocks/channel, 28 blocks per processor with 150 ohm terminator	57.6K	10,000 cable-feet
			115.2K	5,000 cable-feet
		28 blocks/channel, 28 blocks per processor with 82 ohm terminator and extended node addressing	57.6K	10,000 cable-feet
			115.2K	5,000 cable-feet
			230.4K	2,500 cable-feet
	PLC-5/40	16 blocks/channel, 60 blocks per processor with 150 ohm terminator	57.6K	10,000 cable-feet
			115.2K	5,000 cable-feet
		32 blocks/channel, 60 blocks per processor with 82 ohm terminator and extended node addressing	57.6K	10,000 cable-feet
			115.2K	5,000 cable-feet
			230.4K	2,500 cable-feet
	PLC-5/40L	16 blocks/channel, 32 blocks per processor with 150 ohm terminator	57.6K	10,000 cable-feet
			115.2K	5,000 cable-feet
		32 blocks/channel, 60 blocks per processor with 82 ohm terminator and extended node addressing	57.6K	10,000 cable-feet
			115.2K	5,000 cable-feet
			230.4K	2,500 cable-feet
	PLC-5/60	16 blocks/channel, 64 blocks per processor with 150 ohm terminator	57.6K	10,000 cable-feet
			115.2K	5,000 cable-feet
		32 blocks/channel, 92 blocks per processor with 82 ohm terminator and extended node addressing	57.6K	10,000 cable-feet
			115.2K	5,000 cable-feet
			230.4K	2,500 cable-feet
	PLC-5/60L	16 blocks/channel, 32 blocks per processor with 150 ohm terminator	57.6K	10,000 cable-feet
			115.2K	5,000 cable-feet
		32 blocks/channel, 64 blocks per processor with 82 ohm terminator and extended node addressing	57.6K	10,000 cable-feet
			115.2K	5,000 cable-feet
			230.4K	2,500 cable-feet

When using	and	Maximum Capacity	Baud Rate Used	Maximum Network Distance
PLC-5 family (continued)	PLC-5/250 - requires a 5150-RS remote scanner	16 blocks/channel, 32 blocks/scanner, (128 blocks with 4 scanners) with 150 ohm terminator	57.6K	10,000 cable-feet
			115.2K	5,000 cable-feet
		32 blocks/channel, 32 blocks/scanner, (128 blocks with 4 scanners) with 82 ohm terminator and extended node addressing	57.6K	10,000 cable-feet
			115.2K	5,000 cable-feet
			230.4K	2,500 cable-feet
SLC-5/02 (and greater) Controller	1747-SN Remote I/O Scanner Module (discrete mode only)	8 blocks with 150 ohm terminator[3]	57.6K	10,000 cable-feet
			115.2K	5,000 cable-feet
		8 blocks with 82 ohm terminator[3]	230.4K	2,500 cable-feet

[1] PLC-5/15 series A and PLC-5/15 series B prior to revision H (B/H) can only address 3 blocks.
[2] PLC-5/25 revisions prior to A/D can only address 7 blocks.
[3] Analog block is 1/2 rack in discrete transfer mode. If you combine analog block and discrete transfer on the same RIO link, the capacity ranges between 8 and 15 blocks.

Installing the Block I/O

Figure 2.1 shows the mounting dimensions for the block I/O module. Mount the blocks vertically with a minimum of 2” between blocks. This air gap is necessary to maintain proper cooling air flow through the block.

Figure 2.1
Mounting Dimensions for the Block I/O Modules (1791-N4V2 shown)

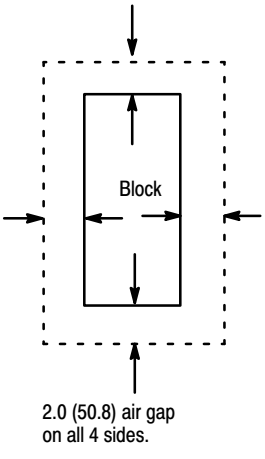

Operating temperature in air gap below module must not exceed 60ºC (140ºF).

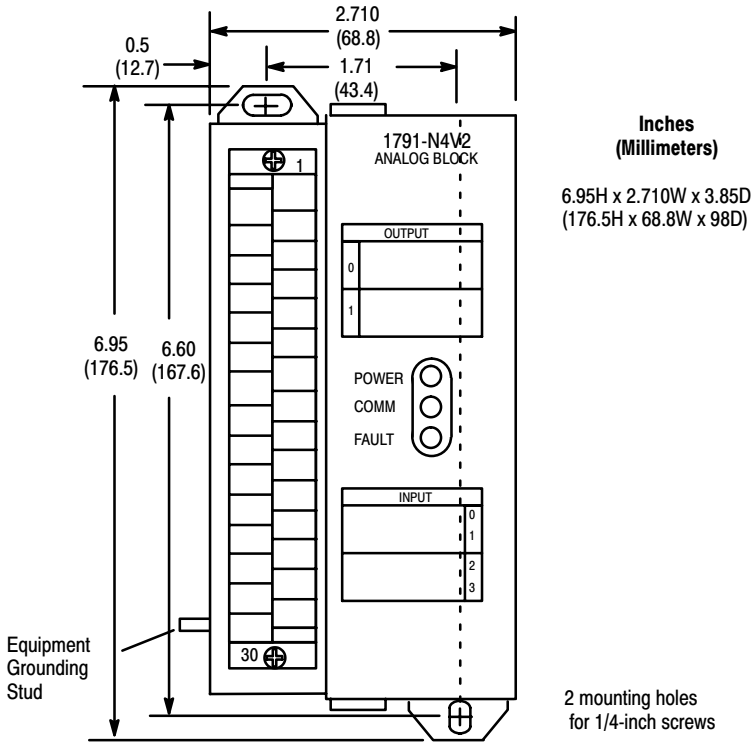

CAUTION: When tightening grounding stud nut, do not exceed 15 in-lbs.

Figure 2.2
Mounting on a DIN Rail

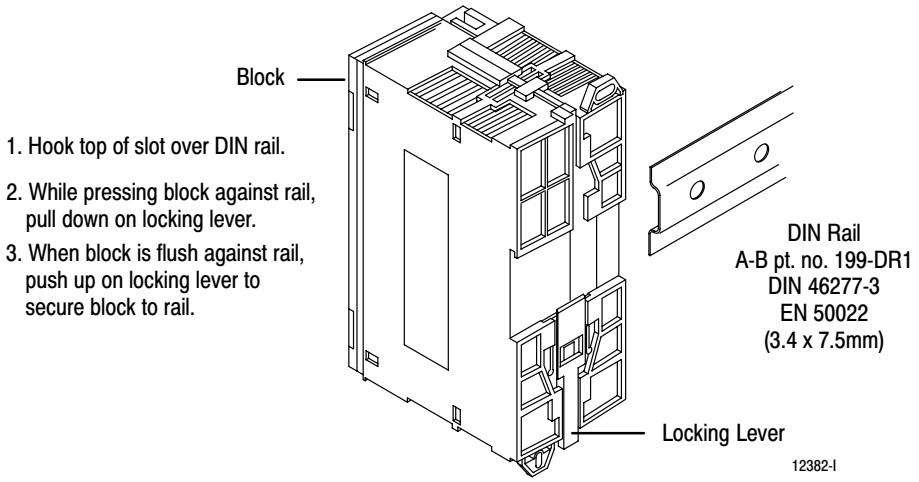

Connecting Wiring

Make wiring connections to the removable terminal block which plugs into the front of the block.

ATTENTION: The terminal block is not keyed to prevent incorrect insertion. If you remove the terminal block, make certain that it is inserted with the lower row of screws on the outside of the block with number 1 at the top of the terminal strip.

Figure 2.3
Removing the Terminal Block

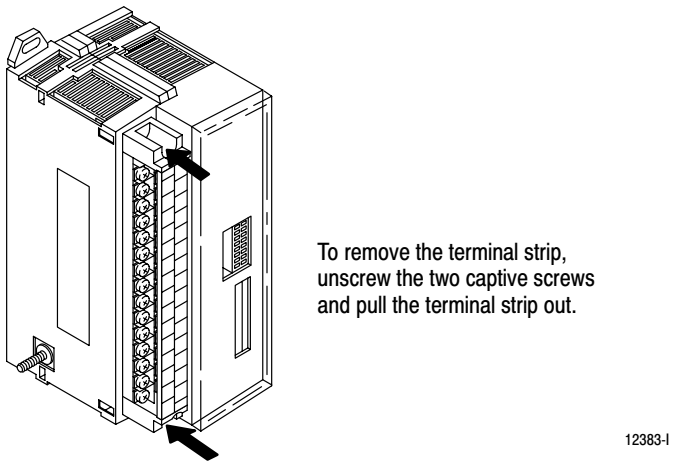

Figure 2.4
Terminal Block Pin Numbering

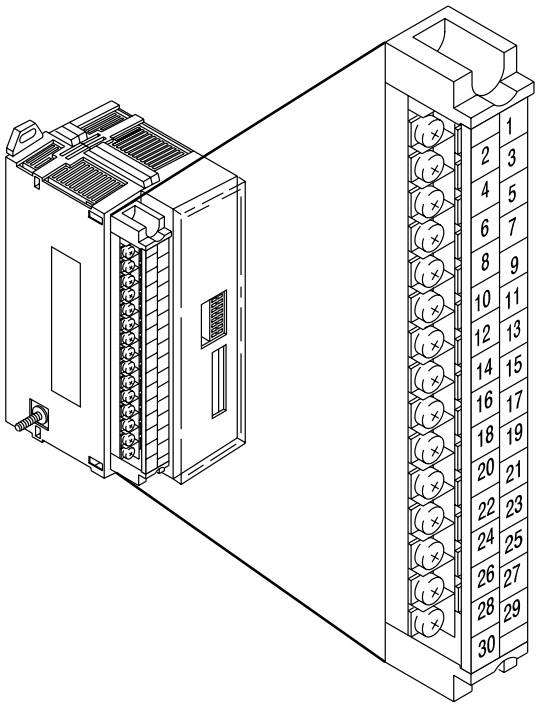

Refer to the following table for wiring schematics and connecting wiring lists for the analog block modules.

Power Supply Voltage	Input	For Schematic refer to:	For wiring refer to:
120V ac	Wiring Connections for the Analog Block with Voltage Inputs	Figure 2.5, page 2-6	Table 2.B, page 2-9
24V dc		Figure 2.6, page 2-6	Table 2.C, page 2-10
120V ac	Wiring Connections for the Analog Block with Current Input and Customer-Supplied Loop Power	Figure 2.7, page 2-7	Table 2.D, page 2-11
24V dc		Figure 2.8, page 2-7	Table 2.E, page 2-12
120V ac	Wiring Connections for the Analog Block with Current Input and Block-Supplied Loop Power	Figure 2.9, page 2-8	Table 2.D, page 2-11
24V dc		Figure 2.10, page 2-8	Table 2.E, page 2-12

Figure 2.5
Wiring Connections for the 120V ac Analog Block with Voltage Inputs

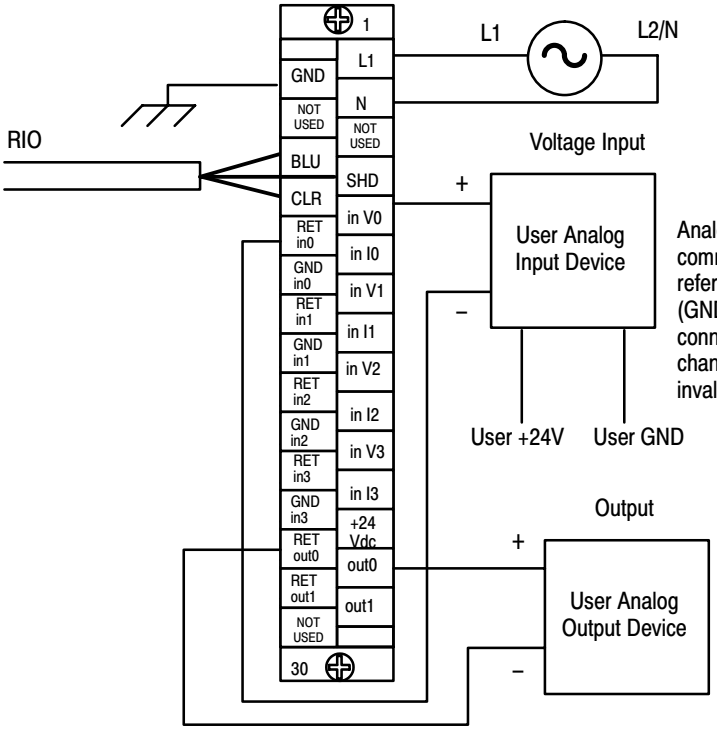

Analog signals must be within the 10V common mode voltage range which is referenced to the analog input common (GND). Typically, this is accomplished by connecting to user ground. If an input channel floats outside of this range, invalid input readings will result.

Figure 2.6
Wiring Connections for the 24V dc Analog Block with Voltage Input

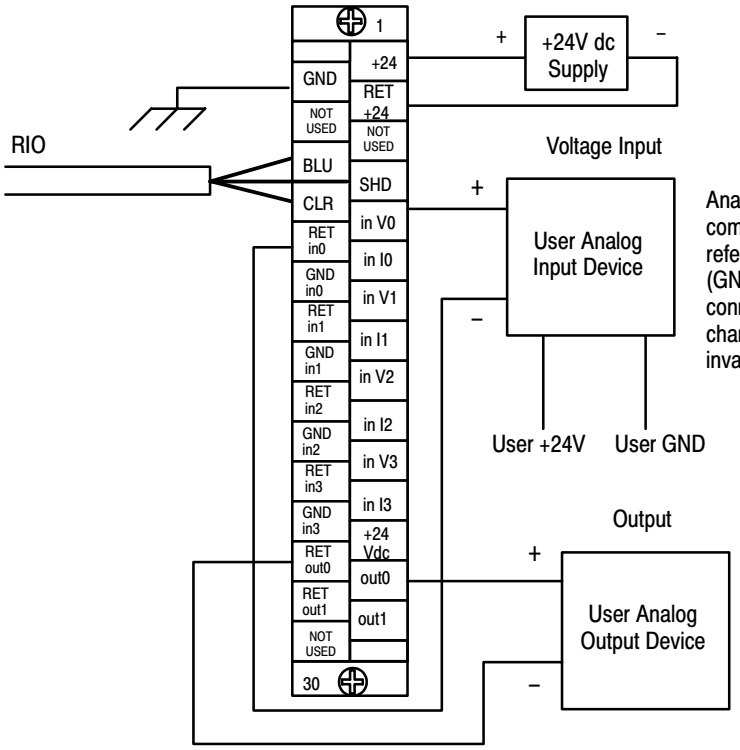

Analog signals must be within the 10V common mode voltage range which is referenced to the analog input common (GND). Typically, this is accomplished by connecting to user ground. If an input channel floats outside of this range, invalid input readings will result.

Figure 2.7
Wiring Connections for the 120V ac Analog Block with Current Input and Customer-Supplied Loop Power

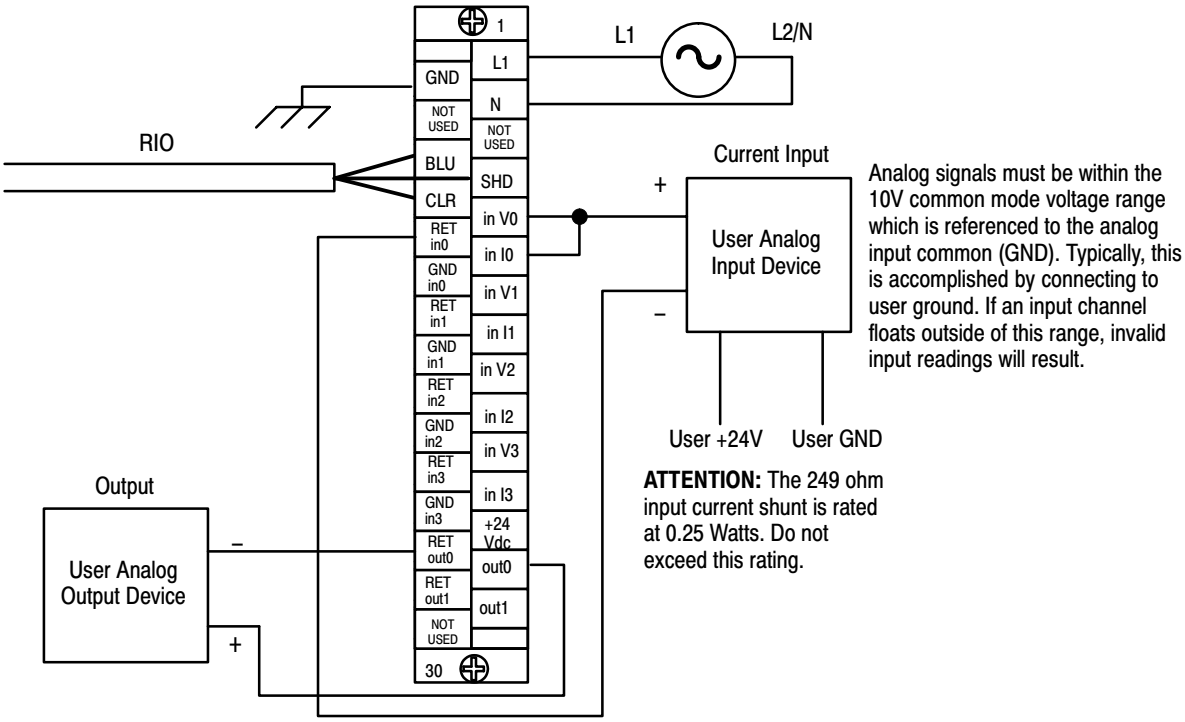

Figure 2.8
Wiring Connections for the 24V dc Analog Block with Current Input and Customer-Supplied Loop Power

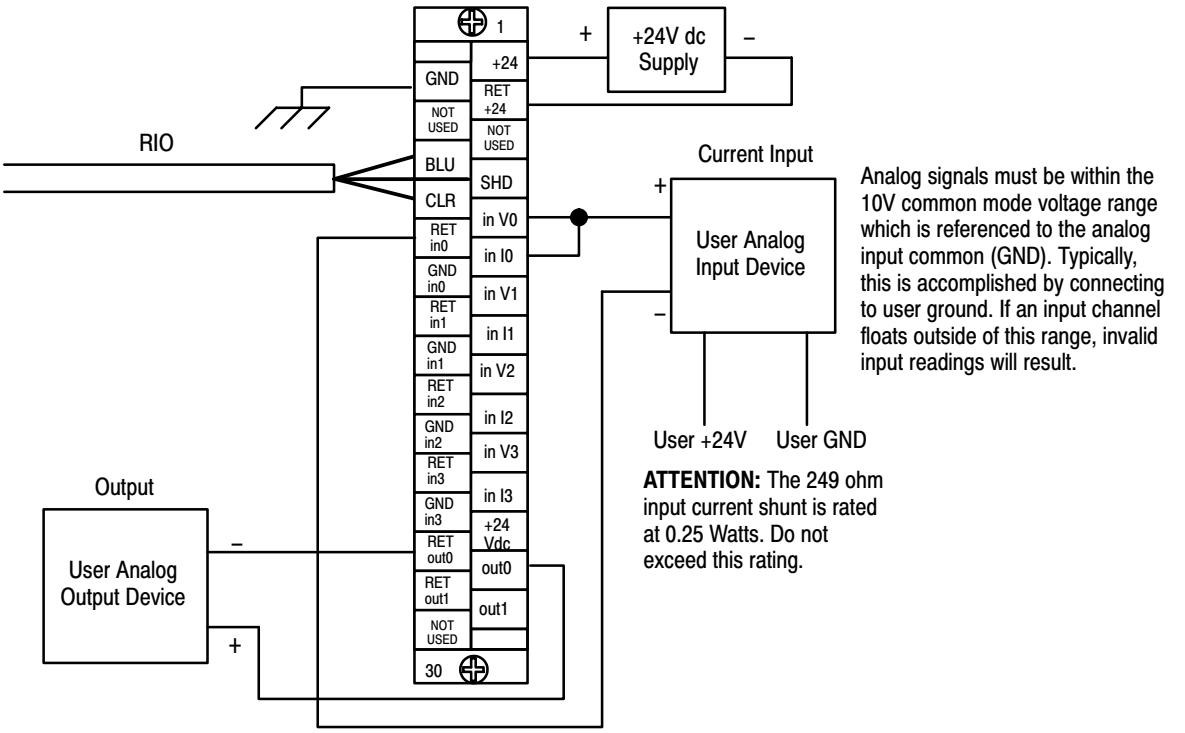

Figure 2.9
Wiring Connections for the 120V ac Analog Block with Current Input and Block-Supplied Loop Power

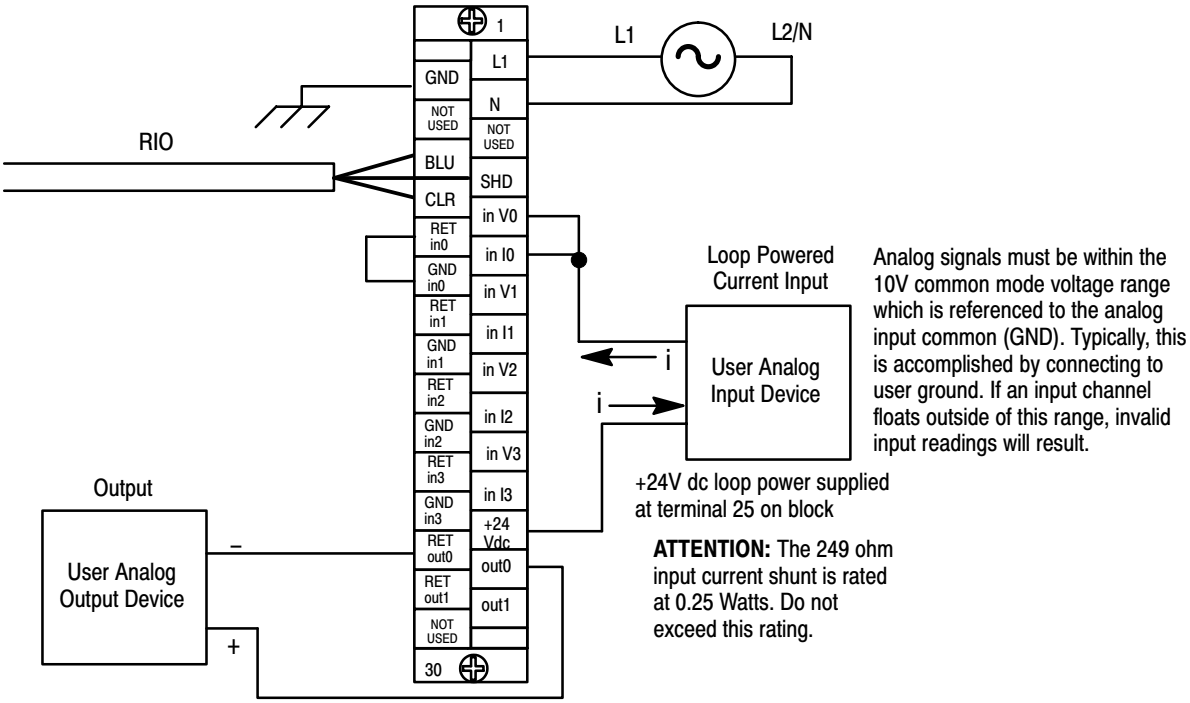

Figure 2.10
Wiring Connections for the 24V dc Analog Block Module with Current Input and Block-Supplied Loop Power

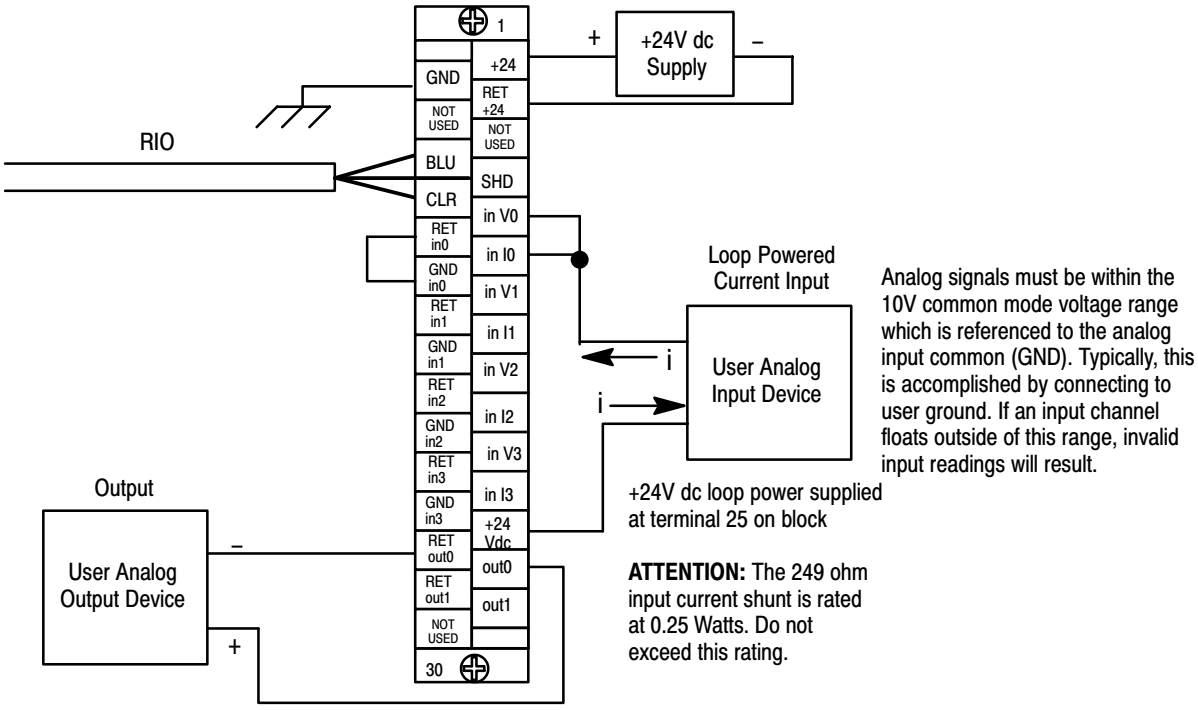

Table 2.B
Wiring Block Designations for Cat. No. 1791-N4V2

Connections	1791–N4V2		
	Designation	**Description**	**Terminal No.**
Power Connections	L1	ac hot	1
	N	ac neutral	3
	GND	Chassis ground	2[1]
Transducer Power[2]	+24V	For current input only	25
Remote I/O Connections	BLU	Blue wire – RIO	6
	CLR	Clear wire – RIO	8
	SHD	Shield – RIO	7
I/O Connections			
Voltage Input	inV0 thru inV3	Voltage Input 0 through 3	9, 13, 17, 21
	RET in0 thru RET in3	Input Return 0 through 3	10, 14, 18, 22
Current Input	inI0 thru inI3	Current Input 0 through 3	11, 15, 19, 23
	RET in0 thru RET in3	Input Return 0 through 3	10, 14, 18, 22
Input Ground	GNDin0-GNDin3	Channels 0-3 ground	12, 16, 20, 24[3]
Output	out 0 – RET out 0	Output 0 (+) Return output 0 (–)	27 26[4]
	out 1 – RET out 1	Output 1 (+) Return output 1 (–)	29 28[4]
	Not used	For internal test only; not for customer use.	4, 5, 30

1 Connect chassis ground to equipment grounding stud. These are not internally connected.
2 20-28V dc (nominal 24V, 100mA)) voltage source for accommodating loop-powered current transducer inputs.
3 Terminals 12, 16, 20, and 24 are internally connected.
4 Terminals 26 and 28 internally connected together.

Table 2.C
Wiring Block Designations for Cat. No. 1791-NDV

Connections	1791–NDV		
	Designation	**Description**	**Terminal No.**
Power Connections	+24	+24V dc Power	1
	RET +24	dc Return	3
	GND	Chassis ground	2[1]
Transducer Power[2]	+24V	For current input only	25
Remote I/O Connections	BLU	Blue wire – RIO	6
	CLR	Clear wire – RIO	8
	SHD	Shield – RIO	7
I/O Connections			
Voltage Input	inV0 thru inV3	Voltage Input 0 through 3	9, 13, 17, 21
	RET in0 thru RET in3	Input Return 0 through 3	10, 14, 18, 22
Current Input	inI0 thru inI3	Current Input 0 through 3	11, 15, 19, 23
	RET in0 thru RET in3	Input Return 0 through 3	10, 14, 18, 22
Input Ground	GNDin0–GNDin3	Channels 0–3 ground	12, 16, 20, 24[3]
Output	out 0 – RET out 0	Output 0 (+) Return output 0 (–)	27 26[4]
	out 1 – RET out 1	Output 1 (+) Return output 1 (–)	29 28[4]
	Not used	For internal test only; not for customer use.	4, 5, 30

1 Connect chassis ground to equipment grounding stud. These are not internally connected.
2 20-28V dc (nominal 24V, 100mA) voltage source for accommodating loop-powered current transducer inputs.
3 Terminals 12, 16, 20, and 24 are internally connected.
4 Terminals 26 and 28 internally connected together.

Table 2.D
Wiring Block Designations for Cat. No. 1791-N4C2

Connections	1791–N4C2		
	Designation	**Description**	**Terminal No.**
Power Connections	L1	ac hot	1
	N	ac neutral	3
	GND	Chassis ground	2[1]
Transducer Power[2]	+24V	For current input only	25
Remote I/O Connections	BLU	Blue wire – RIO	6
	CLR	Clear wire – RIO	8
	SHD	Shield – RIO	7
I/O Connections			
Voltage Input	inV0 thru inV3	Voltage Input 0 through 3	9, 13, 17, 21
	RET in0 thru RET in3	Input Return 0 through 3	10, 14, 18, 22
Current Input	inI0 thru inI3	Current Input 0 through 3	11, 15, 19, 23
	RET in0 thru RET in3	Input Return 0 through 3	10, 14, 18, 22
Input Ground	GNDin0-GNDin3	Channels 0-3 ground	12, 16, 20, 24[3]
Output	out 0 – RET out 0	Output 0 (+) Return output 0 (–)	27 26[4]
	out 1 – RET out 1	Output 1 (+) Return output 1 (–)	29 28[4]
	Not used	For internal test only; not for customer use.	4, 5, 30

1 Connect chassis ground to equipment grounding stud. These are not internally connected.
2 20-28V dc (nominal 24V, 100mA) voltage source for accommodating loop-powered current transducer inputs.
3 Terminals 12, 16, 20, and 24 are internally connected.
4 Terminals 26 and 28 internally connected together.

Table 2.E
Wiring Block Designationsfor Cat. No. 1791-NDC

Connections	1791–NDC		
	Designation	Description	Terminal No.
Power Connections	+24	+24V dc Power	1
	RET +24	dc Return	3
	GND	Chassis ground	2[1]
Transducer Power[2]	+24V	For current input only	25
Remote I/O Connections	BLU	Blue wire – RIO	6
	CLR	Clear wire – RIO	8
	SHD	Shield – RIO	7
I/O Connections			
Voltage Input	inV0 thru inV3	Voltage Input 0 through 3	9, 13, 17, 21
	RET in0 thru RET in3	Input Return 0 through 3	10, 14, 18, 22
Current Input	inI0 thru inI3	Current Input 0 through 3	11, 15, 19, 23
	RET in0 thru RET in3	Input Return 0 through 3	10, 14, 18, 22
Input Ground	GNDin0–GNDin3	Channels 0–3 ground	12, 16, 20, 24[3]
Output	out 0 – RET out 0	Output 0 (+) Return output 0 (–)	27 26[4]
	out 1 – RET out 1	Output 1 (+) Return output 1 (–)	29 28[4]
	Not used	For internal test only; not for customer use.	4, 5, 30

1 Connect chassis ground to equipment grounding stud. These are not internally connected.
2 20-28V dc (nominal 24V, 100mA) voltage source for accommodating loop-powered current transducer inputs.
3 Terminals 12, 16, 20, and 24 are internally connected.
4 Terminals 26 and 28 internally connected together.

Table 2.F
Acceptable Wiring Cables for Block I/O Connection

Use	Cable Type
Remote I/O link	Belden 9463
Input and output wiring	Up to 14AWG (2mm^2) stranded with 3/64 inch insulation

Termination Resistor

A termination resistor must be installed on the last block in a series. Connect the resistor as shown in Figure 2.11.

Figure 2.11
Installing the Termination Resistor

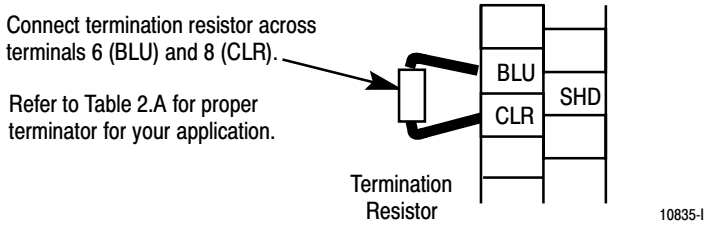

Remote I/O Link

Blocks must be wired in series as shown in Figure 2.12 or Figure 2.13. Do not attempt to wire any block in parallel.

The number of blocks used depends not only on the user requirements but also on the system used. Refer to Table 2.A (page 2-1) for maximum block usage for individual systems.

Figure 2.12
Series Connection for Block I/O Using PLC-2, PLC-3 or PLC-5 Family Programmable Controllers

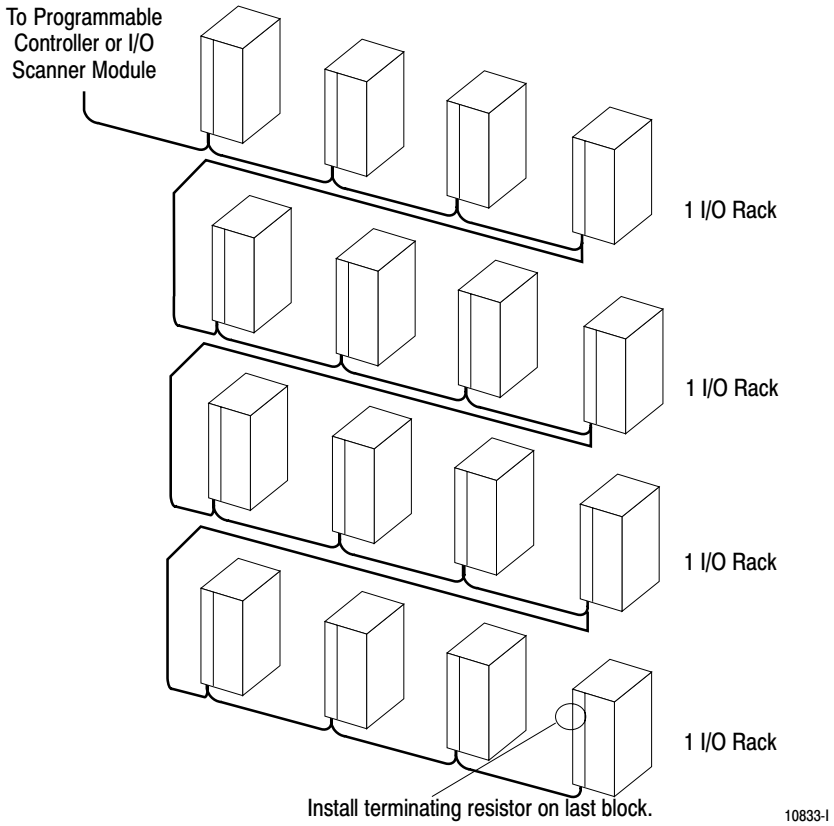

Figure 2.13
Series Configurations for Block I/O Using the SLC Programmable Controller

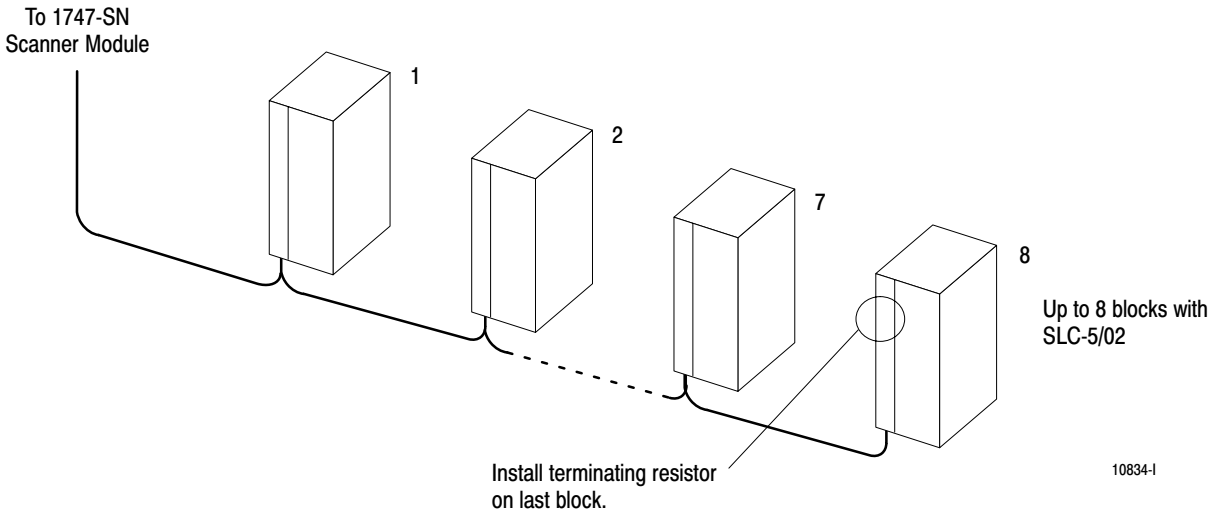

Extended Node Capability

If this is the last remote I/O adapter on the remote I/O link in a PLC system, you must use a terminating resistor to terminate both ends of the remote I/O link (scanner end and last block end). The size of the terminator is determined by the system configuration.

Older system configurations must use a 150 ohm resistor at both ends. With newer devices that can support it, you can use an 82 ohm termination resistor at both ends. The 82 ohm terminators provide “extended node” capability which allows you to have up to 32 physical devices on the remote I/O link. (The number of logical racks capable of being addressed by the scanner is not affected.)

ATTENTION: Devices that are operating at 230.4K baud must have 82 ohm terminators in place for proper operation.

Compatibility of 1771 I/O Products with Extended Node Numbers

Certain products are **not compatible** with extended node capabilities obtained with the use of 82 ohm terminators. Table 2.G lists those products that are **not compatible**.

Table 2.G
Non-compatible Products

Device		Series
Scanners -	1771-SN	All
	1772-SD	All
	1772-SD2	All
	1775-SR	All
	1775-S4A	All
	1775-S4B	All
Adapters -	1771-AS	All
	1771-ASB	Series A
	1771-DCM	All
Miscellaneous -	1771-AF	All
	1771-AF1	All

Selecting Remote I/O Link Speed

The remote I/O link can operate at three speeds: 57.6K, 115.2K or 230.4K bits/s. The selection of link speed is dependent on the scanner/processor used, throughput requirements, distance required and the type of remote I/O devices being used.

Throughput Requirements

Block throughput using analog block is dependent on the controllers data transfer rate. Analog block outputs are updated within 10ms of receiving output data from the controller. The analog block inputs are sampled in a “round robin” fashion with an input channel sampled every 27ms. This means that a given input channel is sampled every 108ms (four input channels times 27ms). At the end of every sample period of 27ms, the most recent input data is made available for data transfer to the controller.

Consult your programmable controller user manual for Remote I/O Communications to determine your system throughput.

Chapter 3

Configuring Your Block I/O for PLC Family Programmable Controllers

Chapter Objectives

In this chapter, you will learn how to configure your block I/O when used with PLC family programmable controllers. This includes the following:

- setting the configuration switches
- addressing the block I/O

Setting the Configuration Switches

Each block I/O module has two 8-position switches for setting:

- starting I/O group
- I/O rack number
- communication rate
- last chassis
- last state
- block transfer/discrete transfer
- processor restart/lockout

These switches are accessible by opening the clear plastic door on the front of the module (Figure 3.1).

ATTENTION: Recycle power to the block I/O module after setting the switches.

Figure 3.1
Switch Settings for the Analog Block I/O Modules

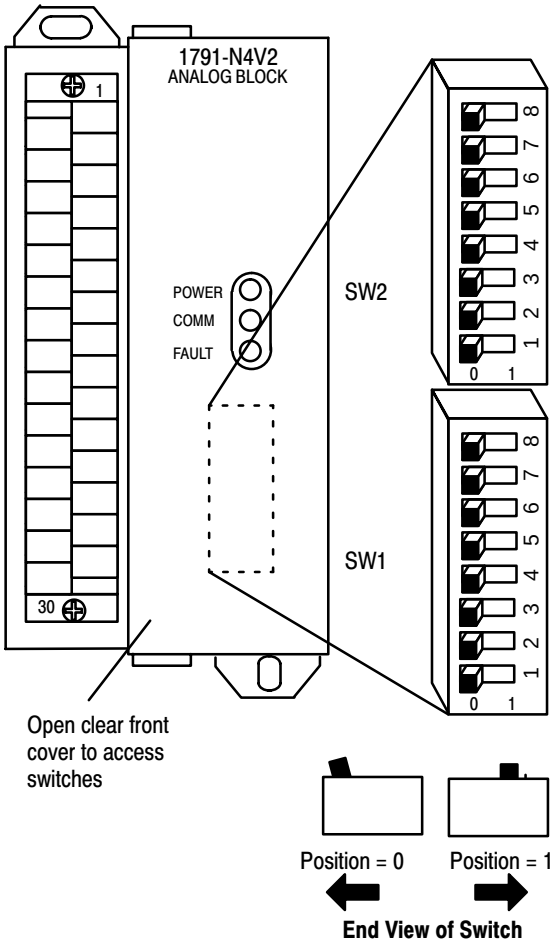

SW2–8
Not used

SW2–7
Not Used

SW2–6	Last I/O Group
0	Not last rack
1	Last rack

SW2–5	Processor Restart/Lockout (PRL)
0	Processor Restart
1	Processor Lockout

SW2–4	Hold Last State
0	Reset Outputs
1	Hold Last State

SW2–3	Transfer Type
0	Block Transfer
1	Discrete Transfer

Communication Rate		
SW2–2	SW2–1	Bits/s
0	0	57.6 K
0	1	115.2 K
1	0	230.4 K
1	1	230.4 K

Starting Quarter		
SW1–2	SW1–1	Module Group
0	0	0 (1st)
0	1	2 (2nd)
1	0	4 (3rd)
1	1	6 (4th)

ATTENTION: Recycle power to the block I/O module after setting the switches.

1747-SN Rack Number	1771-SN Rack Number	PLC-2 Rack Number	PLC-5 Rack Number	PLC-5/250 Rack Number	PLC-3 Rack Number	SW1 Switch Position					
						8	7	6	5	4	3
Rack 0	Rack 1	Rack 1	Not Valid	Rack 0	Rack 0	0	0	0	0	0	0
Rack 1	Rack 2	Rack 2	Rack 1	Rack 1	Rack 1	0	0	0	0	0	1
Rack 2	Rack 3	Rack 3	Rack 2	Rack 2	Rack 2	0	0	0	0	1	0
Rack 3	Rack 4	Rack 4	Rack 3	Rack 3	Rack 3	0	0	0	0	1	1
	Rack 5	Rack 5	Rack 4	Rack 4	Rack 4	0	0	0	1	0	0
	Rack 6	Rack 6	Rack 5	Rack 5	Rack 5	0	0	0	1	0	1
	Rack 7	Rack 7	Rack 6	Rack 6	Rack 6	0	0	0	1	1	0
			Rack 7	Rack 7	Rack 7	0	0	0	1	1	1
			Rack 10	Rack 10	Rack 10	0	0	1	0	0	0
			Rack 11	Rack 11	Rack 11	0	0	1	0	0	1
			Rack 12	Rack 12	Rack 12	0	0	1	0	1	0
			Rack 13	Rack 13	Rack 13	0	0	1	0	1	1
			Rack 14	Rack 14	Rack 14	0	0	1	1	0	0
			Rack 15	Rack 15	Rack 15	0	0	1	1	0	1
			Rack 16	Rack 16	Rack 16	0	0	1	1	1	0
			Rack 17	Rack 17	Rack 17	0	0	1	1	1	1
			Rack 20	Rack 20	Rack 20	0	1	0	0	0	0
			Rack 21	Rack 21	Rack 21	0	1	0	0	0	1
			Rack 22	Rack 22	Rack 22	0	1	0	0	1	0
			Rack 23	Rack 23	Rack 23	0	1	0	0	1	1
			Rack 24	Rack 24	Rack 24	0	1	0	1	0	0
			Rack 25	Rack 25	Rack 25	0	1	0	1	0	1
			Rack 26	Rack 26	Rack 26	0	1	0	1	1	0
			Rack 27	Rack 27	Rack 27	0	1	0	1	1	1
				Rack 30	Rack 30	0	1	1	0	0	0
				Rack 31	Rack 31	0	1	1	0	0	1
				Rack 32	Rack 32	0	1	1	0	1	0
				Rack 33	Rack 33	0	1	1	0	1	1
				Rack 34	Rack 34	0	1	1	1	0	0
				Rack 35	Rack 35	0	1	1	1	0	1
				Rack 36	Rack 36	0	1	1	1	1	0
				Rack 37	Rack 37	0	1	1	1	1	1
					Rack 40	1	0	0	0	0	0
					Rack 41	1	0	0	0	0	1
					Rack 42	1	0	0	0	1	0
					Rack 43	1	0	0	0	1	1
					Rack 44	1	0	0	1	0	0
					Rack 45	1	0	0	1	0	1
					Rack 46	1	0	0	1	1	0
					Rack 47	1	0	0	1	1	1
					Rack 50	1	0	1	0	0	0

1747-SN Rack Number	1771-SN Rack Number	PLC-2 Rack Number	PLC-5 Rack Number	PLC-5/250 Rack Number	PLC-3 Rack Number	SW1 Switch Position					
						8	7	6	5	4	3
					Rack 51	1	0	1	0	0	1
					Rack 52	1	0	1	0	1	0
					Rack 53	1	0	1	0	1	1
					Rack 54	1	0	1	1	0	0
					Rack 55	1	0	1	1	0	1
					Rack 56	1	0	1	1	1	0
					Rack 57	1	0	1	1	1	1
					Rack 60	1	1	0	0	0	0
					Rack 61	1	1	0	0	0	1
					Rack 62	1	1	0	0	1	0
					Rack 63	1	1	0	0	1	1
					Rack 64	1	1	0	1	0	0
					Rack 65	1	1	0	1	0	1
					Rack 66	1	1	0	1	1	0
					Rack 67	1	1	0	1	1	1
					Rack 70	1	1	1	0	0	0
					Rack 71	1	1	1	0	0	1
					Rack 72	1	1	1	0	1	0
					Rack 73	1	1	1	0	1	1
					Rack 74	1	1	1	1	0	0
					Rack 75	1	1	1	1	0	1
					Rack 76	1	1	1	1	1	0
					Not Valid	1	1	1	1	1	1

Rack address 77 is an illegal configuration.
PLC-5/11 processors can scan rack 03.
PLC-5/15 and PLC-5/20 processors can scan racks 01-03.
PLC-5/25 and PLC-5/30 processors can scan racks 01-07.
PLC-5/40 and PLC-5/40L processors can scan racks 01-17.
PLC-5/60 and PLC-5/60L processors can scan racks 01-27.
PLC-5/250 processors can scan racks 0-37.
PLC-3 processors can scan racks 0-76.

The SLC 500 controllers communicate with the block I/O using an I/O Scanner module (cat. no. 1747-SN series A). Refer to the user manual for the 1747-SN/A Scanner module for more information.

Note: These block I/O modules are **not** compatible with the **1747-DSN** Distributed I/O Scanner module.

When using **block transfer**, each analog block I/O module uses 2 words of output image table memory and 2 words of input image table memory. Each block occupies 1/4 rack of data table, with 4 blocks comprising 1 logical rack. Image table usage for one assigned rack number is shown in Figure 3.3.

Figure 3.2
I/O Image Table for One Assigned Rack Number using Block Transfer

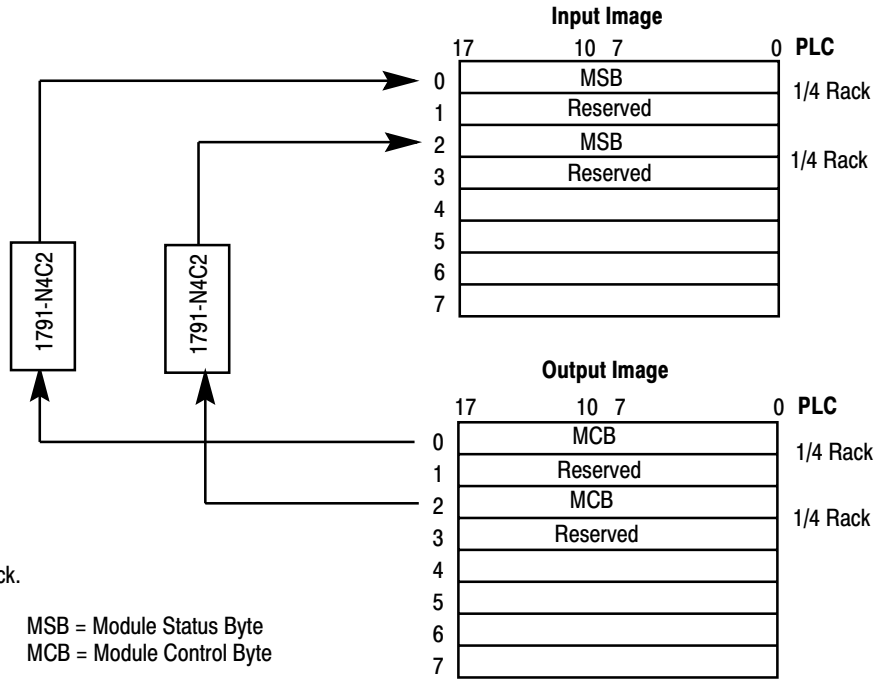

Block transfer requires 1/4 rack.

MSB = Module Status Byte
MCB = Module Control Byte

When using **discrete transfer**, each analog block I/O module uses 4 words of output image table memory and 4 words of input image table memory. Each block occupies 1/2 rack of data table, with 2 blocks comprising 1 logical rack. Image table usage for one assigned rack number is shown in Figure 3.3.

Figure 3.3
I/O Image Table for One Assigned Rack Number using Discrete Transfer

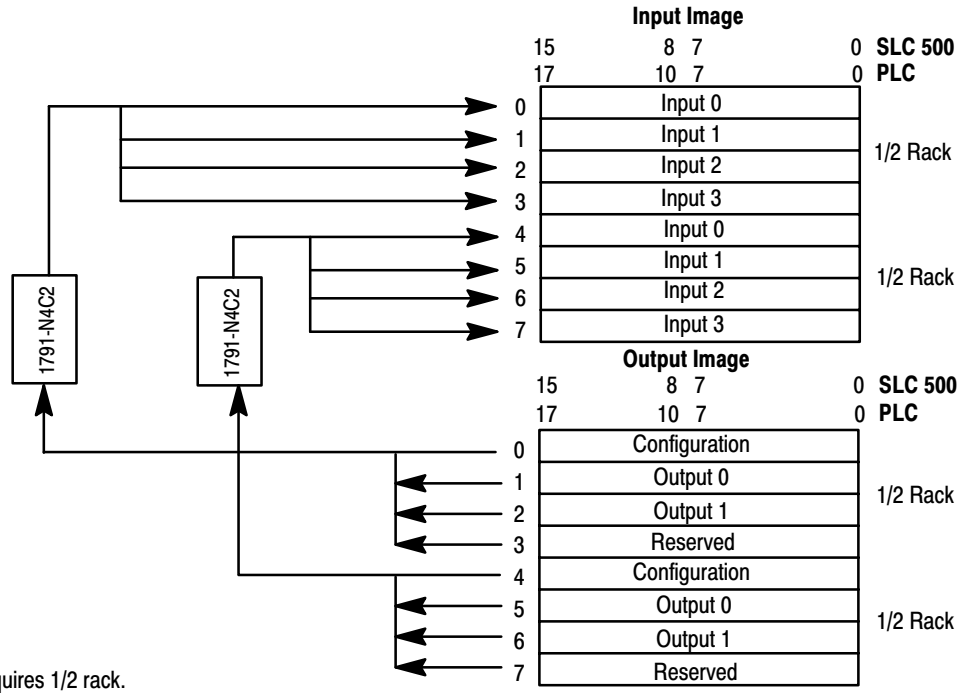

Discrete transfer requires 1/2 rack.

Module Scan Time

Scan time depends on the block transfer rate over the remote I/O network, which is asynchronous to the module input sample rate and output update rate. The block transfer rate is dependent on the controller, program length, the amount of communication traffic to other modules on the remote I/O network and the speed (baud rate) of the remote I/O network.

Figure 3.4
Module Scan Time Relationships

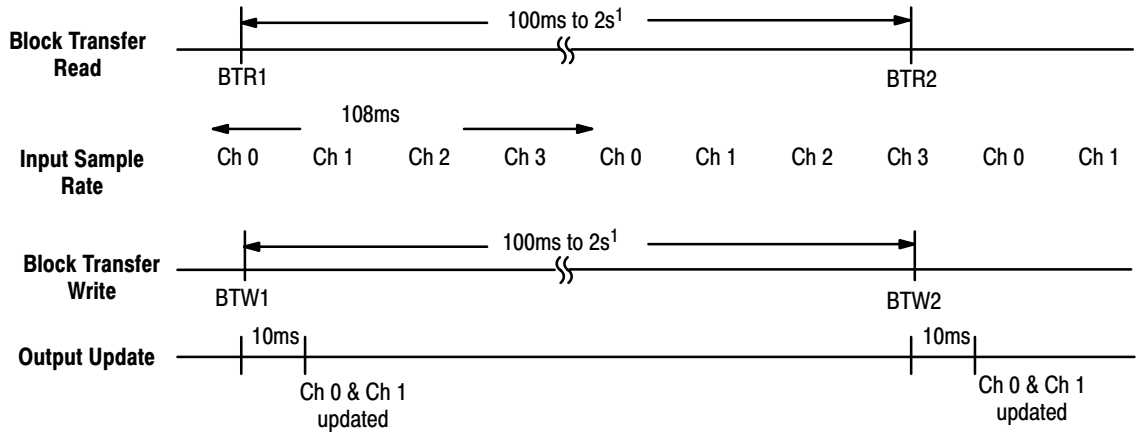

[1] Time depends on the remote I/O network configuration.

Chapter 4

Analog Block Applications Using Block Transfers

Chapter Objectives

In this chapter, you will read about:

- reading data and status from the module
- block transfer read data format
- configuring the module and setting outputs with block transfer write instructions

Reading Data and Status from the Module

Block transfer instructions are used when the analog block is used with PLC programmable controllers with block transfer capability. Block transfer read (BTR) programming moves status and data from the module to the processor's data table in one I/O scan. The processor user program initiates the request to transfer data from the module to the processor.

The transferred words contain module status, channel status and input data from the module. The maximum BTR data file length required is five words (0 thru 4).

Block Transfer Read Data Format

The block transfer read data format consists of input data and module status. Word 0 contains the power up bit (**PU**), the bad configuration bit (**BC**), out of range bit (**OR**), status code, high alarm and low alarm bits. Words 1 through 4 contain input channel data.

Complete configuration data and bit/word descriptions are shown in Figure 4.1 and Table 4.A.

Figure 4.1
Block Transfer Read for Analog Blocks using PLC Controllers

Decimal	15	14	13	12	11	10	09	08	07	06	05	04	03	02	01	00
Octal	17	16	15	14	13	12	11	10	07	06	05	04	03	02	01	00
0	PU	BC	OR	Status Code					High Alarm				Low Alarm			
1	Input Channel 0 Data															
2	Input Channel 1 Data															
3	Input Channel 2 Data															
4	Input Channel 3 Data															

Table 4.A
Bit/Word Descriptions for Block Transfer Read Instruction

Word	Decimal Bit (Octal Bit)	Description
Word 0	Bits 15 (17)	Power up (PU) status bit. This bit is set (1) if the module has not been configured since the last power up. It is reset (0) when at least one valid BTW has occurred since power up. Outputs are not enabled until the PU bit is reset.
	Bit 14 (16)	Bad configuration (BC) bit. This bit is set (1) if an invalid configuration data has been received, and the previous configuration remains in effect.
	Bit 13 (15)	Out of range (OR) bit. When set, indicates one or both of the outputs has received a value which exceeds the output range. Outputs are clamped at their maximum or minimum values depending on the direction of the out of range value.
	Bits 08-12 (10-14)	Status Codes. When the Bad Configuration (BC) bit 14 (16), is set (1), the status code indicates the following: 1 - output channel 0 scaling error 2 - output channel 1 scaling error 3 - input channel 0 scaling error 4 - input channel 1 scaling error 5 - input channel 2 scaling error 6 - input channel 3 scaling error 7 - channel 0 alarm error 8 - channel 1 alarm error 9 - channel 2 alarm error A - channel 3 alarm error When the output out of range (OR) bit 13 (15) is set (1), the status code bits indicate the following: Bit 08 (10) - output 0 has been clamped at its minimum Bit 09 (11) - output 1 has been clamped at its minimum Bit 10 (12) - output 0 has been clamped at its maximum Bit 11 (13) - output 1 has been clamped at its maximum
	Bits 04-07	High alarm bits. Set (1) if the input channel value is greater than the corresponding high alarm value. Bit 04 - high alarm bit for channel 0 Bit 05 - high alarm bit for channel 1 Bit 06 - high alarm bit for channel 2 Bit 07 - high alarm bit for channel 3
	Bits 00-03	Low alarm bits. Set (1) if the input channel value is less than the corresponding low alarm value. Bit 00 - low alarm bit for channel 0 Bit 01 - low alarm bit for channel 1 Bit 02 - low alarm bit for channel 2 Bit 03 - low alarm bit for channel 3
Word 1	Bits 00-15 (00-17)	Input data for channel 0.
Word 2	Bits 00-15 (00-17)	Input data for channel 1.
Word 3	Bits 00-15 (00-17)	Input data for channel 2.
Word 4	Bits 00-15 (00-17)	Input data for channel 3.

Configuring the Module and Setting Outputs with Block Transfer Write Instructions

You must configure your block module by performing a block transfer write (BTW) instruction from the programmable controller to the module. Each input can be independently configured in one BTW.

Maximum length of the BTW is 27 words (0 thru 26). When configuring the module, first send the complete BTW. You can shorten the BTW to 3 words for subsequent write operations if parameters for each channel remain the same.

Block transfer write data is shown in Figure 4.2.

Figure 4.2
Block Transfer Write for Analog Block I/O

Decimal	15	14	13	12	11	10	09	08	07	06	05	04	03	02	01	00
Octal	**17**	**16**	**15**	**14**	**13**	**12**	**11**	**10**	**07**	**06**	**05**	**04**	**03**	**02**	**01**	**00**
0	Module Mode				Scaling		Range		Alarm Enable				Filter			
1	Output Channel 0 Data															
2	Output Channel 1 Data															
3	Output Channel 0 Minimum Scaling															
4	Output Channel 0 Maximum Scaling															
5	Output Channel 1 Minimum Scaling															
6	Output Channel 1 Maximum Scaling															
7	Input Channel 0 Minimum Scaling															
8	Input Channel 0 Maximum Scaling															
9	Input Channel 1 Minimum Scaling															
10	Input Channel 1 Maximum Scaling															
11	Input Channel 2 Minimum Scaling															
12	Input Channel 2 Maximum Scaling															
13	Input Channel 3 Minimum Scaling															
14	Input Channel 3 Maximum Scaling															
15	Input Channel 0 Low Alarm Level															
16	Input Channel 0 High Alarm Level															
17	Input Channel 0 Alarm Deadband															
18	Input Channel 1 Low Alarm Level															
19	Input Channel 1 High Alarm Level															
20	Input Channel 1 Alarm Deadband															
21	Input Channel 2 Low Alarm Level															
22	Input Channel 2 High Alarm Level															
23	Input Channel 2 Alarm Deadband															
24	Input Channel 3 Low Alarm Level															
25	Input Channel 3 High Alarm Level															
26	Input Channel 3 Alarm Deadband															

The bit/word descriptions are shown in Table 4.B.

Table 4.B
Bit/Word Descriptions for the Block Transfer Write Instruction

Word	Decimal Bit (Octal Bit)	Description

Word 0 — Bits 12-15 (14-17)

Module Mode. Bits 12-15 (14-17) determine the operation of the block module.

Bit	15 (17)	14 (16)	13 (15)	12 (14)	
	0	0	0	0	Normal operation with voltage inputs
	0	0	0	1	Normal operation with current inputs
	1	1	0	0	Calibration operation (refer to Chapter 7)

Word 0 — Bits 10-11 (12-13)

Scaler Mode

Bit	11 (13)	10 (12)	Mode
	0	X	binary
	1	0	default
	1	1	user

Binary Counts - binary data sent to the outputs and returned from the inputs is calibrated, but not scaled, providing maximum possible resolution.
User Scaling - the input and output data are scaled by the values in words 3 thru 6 for outputs, and words 7 thru 14 for inputs.

Default Scaling Values are shown below:

Module Mode Bit 12 (14)	Range Bit 09 (11)	Range Bit 08 (10)	Default Minimum	Default Maximum	Approximate Default Resolution
0	0	0	-10000	+10000	14 Bits
0	0	1	-5000	+5000	13 Bits
1	0	1	-20000	+20000	14 Bits
0	1	0	0000	+10000	13 Bits
0	1	1	0000	+5000	12 Bits
1	1	1	0000	+20000	14 Bits

Default scaling for the output is determined by the catalog number as follows:

Catalog Number	Default Minimum	Default Maximum	Approximate Default Resolution
1791-N4V2, -NDV	-10000	+10000	14 Bits
1791-N4C2, -NDC	00000	+20000	13 Bits

Word 0 — Bits 08-09 (10-11)

Range selection bits. Bit 08 selects voltage and bit 09 selects unipolar or bipolar.

Bit 09 (11)	Bit 08 (10)	Range
0	0	±10V
0	1	±5V
1	0	0-10
1	1	0-5

Word 0 — Bits 04-07

Alarm Enable bits. Enables input alarm when set (1). Bit 04 corresponds to channel 0, bit 05 corresponds to channel 1, bit 06 corresponds to channel 2 and bit 07 corresponds to channel 3.

Word 0 — Bits 00-03

Digital Filter selection. Default of 0000 selects No Filter. Refer to Table 4.C.

Word	Decimal Bit (Octal Bit)	Description
Word 1	Bits 00-15 (00-17)	Output data for channel 0.
Word 2	Bits 00-15 (00-17)	Output data for channel 1.
Word 3	Bits 00-15 (00-17)	Minimum engineering scale factors for output channel 0 data.
Word 4	Bits 00-15 (00-17)	Maximum engineering scale factors for output channel 0 data.
Word 5	Bits 00-15 (00-17)	Minimum engineering scale factors for output channel 1 data.
Word 6	Bits 00-15 (00-17)	Maximum engineering scale factors for output channel 1 data.
Word 7	Bits 00-15 (00-17)	Minimum engineering scale factors for input channel 0 data.
Word 8	Bits 00-15 (00-17)	Maximum engineering scale factors for input channel 0 data.
Word 9	Bits 00-15 (00-17)	Minimum engineering scale factors for input channel 1 data.
Word 10	Bits 00-15 (00-17)	Maximum engineering scale factors for input channel 1 data.
Word 11	Bits 00-15 (00-17)	Minimum engineering scale factors for input channel 2 data.
Word 12	Bits 00-15 (00-17)	Maximum engineering scale factors for input channel 2 data.
Word 13	Bits 00-15 (00-17)	Minimum engineering scale factors for input channel 3 data.
Word 14	Bits 00-15 (00-17)	Maximum engineering scale factors for input channel 3 data.
Word 15	Bits 00-15 (00-17)	Low alarm level for input channel 0. When the input value for this channel is less than the low value, the corresponding low alarm bit is set in the BTR.
Word 16	Bits 00-15 (00-17)	High alarm level for input channel 0. When the input value for this channel is greater than the high value, the corresponding high alarm bit is set in the BTR.
Word 17	Bits 00-15 (00-17)	Alarm deadband for input channel 0. This field creates a hysteresis effect on the low and high alarms. For an alarm condition to be removed, the input signal must go above the low alarm limit or below the high alarm limit by an amount equal to the specified deadband. Alarm deadband values must be less than or equal to one half the difference of the high and low alarm values.
Word 18	Bits 00-15 (00-17)	Low alarm level for input channel 1. When the input value for this channel is less than the low value, the corresponding low alarm bit is set in the BTR.
Word 19	Bits 00-15 (00-17)	High alarm level for input channel 1. When the input value for this channel is greater than the high value, the corresponding high alarm bit is set in the BTR.
Word 20	Bits 00-15 (00-17)	Alarm deadband for input channel 1. This field creates a hysteresis effect on the low and high alarms. For an alarm condition to be removed, the input signal must go above the low alarm limit or below the high alarm limit by an amount equal to the specified deadband. Alarm deadband values must be less than or equal to one half the difference of the high and low alarm values.
Word 21	Bits 00-15 (00-17)	Low alarm level for input channel 2. When the input value for this channel is less than the low value, the corresponding low alarm bit is set in the BTR.
Word 22	Bits 00-15 (00-17)	High alarm level for input channel 2. When the input value for this channel is greater than the high value, the corresponding high alarm bit is set in the BTR.
Word 23	Bits 00-15 (00-17)	Alarm deadband for input channel 2. This field creates a hysteresis effect on the low and high alarms. For an alarm condition to be removed, the input signal must go above the low alarm limit or below the high alarm limit by an amount equal to the specified deadband. Alarm deadband values must be less than or equal to one half the difference of the high and low alarm values.
Word 24	Bits 00-15 (00-17)	Low alarm level for input channel 3. When the input value for this channel is less than the low value, the corresponding low alarm bit is set in the BTR.

Word	Decimal Bit (Octal Bit)	Description
Word 25	Bits 00-15 (00-17)	High alarm level for input channel 3. When the input value for this channel is greater than the high value, the corresponding high alarm bit is set in the BTR.
Word 26	Bits 00-15 (00-17)	Alarm deadband for input channel 3. This field creates a hysteresis effect on the low and high alarms. For an alarm condition to be removed, the input signal must go above the low alarm limit or below the high alarm limit by an amount equal to the specified deadband. Alarm deadband values must be less than or equal to one half the difference of the high and low alarm values.

Table 4.C
Filter Time Selection

Filter Time	Bit Settings			
	Bit 03	Bit 02	Bit 01	Bit 00
Default - no filter	0	0	0	0
Do not use.	0	0	0	1
200ms	0	0	1	0
300ms	0	0	1	1
400ms	0	1	0	0
500ms	0	1	0	1
600ms	0	1	1	0
700ms	0	1	1	1
800ms	1	0	0	0
900ms	1	0	0	1
1000ms	1	0	1	0
1100ms	1	0	1	1
1200ms	1	1	0	0
1300ms	1	1	0	1
1400ms	1	1	1	0
1500ms	1	1	1	1

Chapter 5

Analog Block Applications Using Discrete Transfers

Chapter Objectives

In this chapter you will read about:

- discrete data transfer
- input data format
- output data format

Discrete Data Transfer

When used with SLC controllers, analog block data is transferred as discrete data using the 1747-SN remote I/O scanner module. The analog block uses 1/2 rack of memory in the I/O data table. The transferred words in the input image data table contain only input data from the module.

Discrete transfer programming moves data from the module to the processor's data table in one I/O scan. The processor I/O scan initiates the request to transfer data from the module to the processor.

Input Data Format

The input image table data format consists of four words. All four words are input data for the four input channels as shown in Table 5.A.

Figure 5.1
Discrete Data Transfer Description – Input Table 1/2 Rack

Decimal	15	14	13	12	11	10	09	08	07	06	05	04	03	02	01	00
Octal	17	16	15	14	13	12	11	10	07	06	05	04	03	02	01	00
0	Input Channel 0 Data															
1	Input Channel 1 Data															
2	Input Channel 2 Data															
3	Input Channel 3 Data															

Table 5.A
Input Image Table

Word	Bit – Decimal (Bit – Octal)	Description
Word 0	Bits 00–15 (00–17)	Input data for channel 0.
Word 1	Bits 00–15 (00–17)	Input data for channel 1.
Word 2	Bits 00–15 (00–17)	Input data for channel 2.
Word 3	Bits 00–15 (00–17)	Input data for channel 3.

Output Data Format

The output image table data format consists of four words. **Word 0** is the configuration word consisting of the output enable bit (**OE**), module mode, scaling bit (**SM**), range select bits, and filter bits. SLC configuration word is a subset of the PLC except an enable output bit is added; alarms and user scaling are removed. **Words 1 and 2** contain output data. **Word 3** is reserved.

When using the analog block modules with an SLC controller, data is transferred as discrete data. The data is processed through a 1747-SN remote I/O scanner module.

The following tables show the word/bit assignments for both discrete input and output transfer.

Figure 5.2
Discrete Data Transfer Description – Output Table 1/2 Rack

Decimal	15	14	13	12	11	10	09	08	07	06	05	04	03	02	01	00
Octal	**17**	**16**	**15**	**14**	**13**	**12**	**11**	**10**	**07**	**06**	**05**	**04**	**03**	**02**	**01**	**00**
0	OE	Module Mode			SM		Range						Filter			
1	Output Channel 0 Data															
2	Output Channel 1 Data															
3	Not used															

Table 5.B
Bit/Word Descriptions for Discrete Data Transfer – Output Table 1/2 Rack

Word	Decimal Bit (Octal Bit)	Description
Word 0	Bit 15 (17)	Output Enable Bit **OE** Bit 15 (17): 0 – Outputs are held at 0.; 1 – Both outputs are enabled. **Note:** To calibrate, you must set the Output Enable Bit to 1 (refer to Chapter 7).
	Bits 12–14 (14–16)	Module Mode. Bits 12 thru 14 determine the operation of the block module. 14 (16) / 13 (15) / 12 (14): 0 / 0 / 0 – Normal operation with voltage inputs 0 / 0 / 1 – Normal operation with current inputs 1 / 0 / 0 – Calibration operation
	Bit 11 (13)	Scaler Mode bit **SM** Bit 11 (13): 0 – binary; 1 – default; 1 – user **Binary Counts** – binary data sent to the outputs and returned from the inputs is calibrated, but not scaled, providing maximum possible resolution. **Default Scaling** – When this bit is set to 1, default scaling is in effect.
		Module Mode Bit 11 (13) / Range Bit 09 (11) / Range Bit 08 (10) / Default Minimum / Default Maximum / Approximate Default Resolution 0 / 0 / 0 / –10000 / +10000 / 14 Bits 0 / 0 / 1 / –5000 / +5000 / 13 Bits 1 / 0 / 1 / –20000 / +20000 / 14 Bits 0 / 1 / 0 / 0000 / +10000 / 13 Bits 0 / 1 / 1 / 0000 / +5000 / 12 Bits 1 / 1 / 1 / 0000 / +20000 / 14 Bits
		Default scaling for the output is determined by the catalog number as follows: Catalog Number / Default Minimum / Default Maximum / Approximate Default Resolution 1791-N4V2, -NDV / –10000 / +10000 / 14 Bits 1791-N4C2, -NDC / 00000 / +20000 / 13 Bits
	Bits 08–09 (10–11)	Range selection bits. Bit 08 (10) selects voltage and bit 09 (11) selects unipolar or bipolar mode. Bit 09 (11) / Bit 08 (10) / Range 0 / 0 / ±10V 0 / 1 / ±5V 1 / 0 / 0–10 1 / 1 / 0–5
	Bits 00–03	Digital Filter selection. Default of 0000 selects No Filter. Refer to Table 5.B.
Word 1	Bits 00–15 (00-17)	Output data for channel 0.
Word 2	Bits 00–15 (00-17)	Output data for channel 1.
Word 3	Bits 00–15 (00-17)	Not used.

Table 5.C
Filter Time Selection

Filter Time	Bit Settings			
	Bit 03	Bit 02	Bit 01	Bit 00
Default – no filter	0	0	0	0
Do not use.	0	0	0	1
200ms	0	0	1	0
300ms	0	0	1	1
400ms	0	1	0	0
500ms	0	1	0	1
600ms	0	1	1	0
700ms	0	1	1	1
800ms	1	0	0	0
900ms	1	0	0	1
1000ms	1	0	1	0
1100ms	1	0	1	1
1200ms	1	1	0	0
1300ms	1	1	0	1
1400ms	1	1	1	0
1500ms	1	1	1	1

Chapter 6

Programming Your Analog Block I/O Module

Chapter Objectives

In this chapter, we describe

- block transfer programming
- sample programs in the PLC-3 and PLC-5 processors
- module scan time issues

Block Transfer Programming

Your module communicates with the processor through bidirectional block transfers. This is the sequential operation of both read and write block transfer instructions.

For the analog block I/O modules, block transfer writes (BTWs) can perform two different functions.

If you want to:	Description	This type of BTW is called:
configure the module	This involves setting the bits which enable the programmable features of the module, such as scaling, alarming, real time sampling, etc.	the **"configuration BTW"**
send data to the output channels of those modules having outputs	This type of BTW is generally shorter in length than the configuring BTW because it does not configure the module each time it is initiated.	the **"output update BTW"**

The following example programs are minimum programs; all rungs and conditioning must be included in your application program. You can disable BTRs, or add interlocks to prevent writes if desired. Do not eliminate any storage bits or interlocks included in the sample programs. If interlocks are removed, the program may not work properly.

Your analog module works with a default configuration upon powerup as long as a block transfer write (BTW) has not been initiated. The default mode is binary scaling and the input range is +/–10V. In the default mode, the alarms are off and the outputs are reset at 0.

Your program should monitor status bits (such as power up status, bad configuration, output out of range, alarms, etc.) and block transfer read activity.

The following example programs illustrate the minimum programming required for communication to take place.

PLC-3 Program Example

Block transfer instructions with the PLC-3 processor use one binary file in a data table section for module location and other related data. This is the block transfer control file. The block transfer data file stores data that you want transferred to the module (when programming a block transfer write) or from the module (when programming a block transfer read). The address of the block transfer data files are stored in the block transfer control file.

The programming terminal prompts you to create a control file when a block transfer instruction is being programmed. **The same block transfer control file is used for both the read and write instructions for your module.** A different block transfer control file is required for every module.

A sample program segment with block transfer instructions is shown in Figure 6.1, and described below.

Figure 6.1
PLC-3 Family Sample Program Structure

Program Action

At power-up, the user program examines the BTR done bit in the block transfer read file, initiates a write block transfer to configure the module, and then does consecutive read and write block transfers continuously.

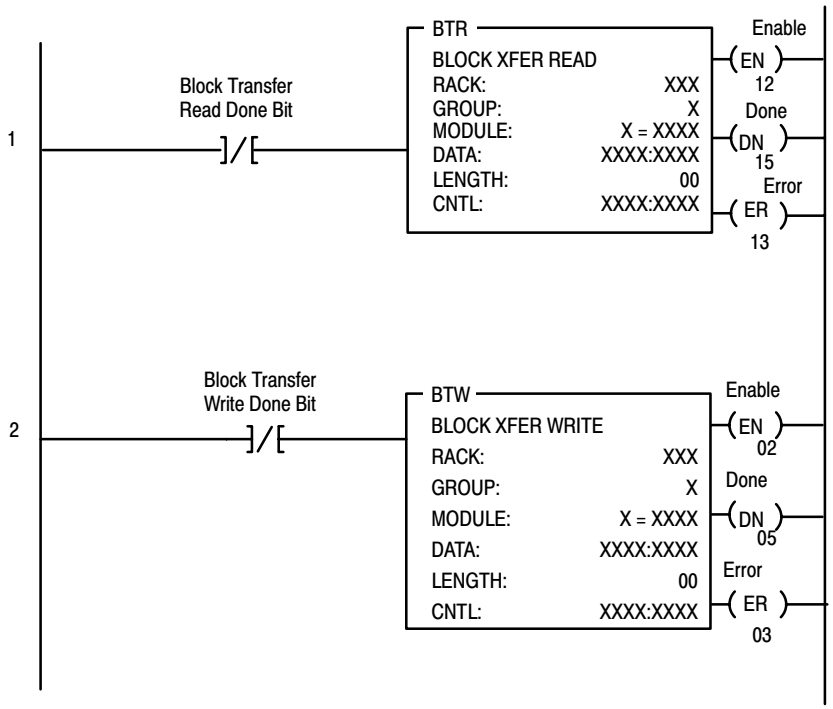

PLC-5 and PLC–5/250 Program Example

This program is very similar to the PLC-3 program with the following exceptions:

- Use enable bits instead of done bits as the conditions on each rung.
- Use separate control files for each block transfer instruction. Refer to Appendix B.

Program Action

At power-up, the program enables a block transfer read. Then, it initiates one block transfer write to configure the module (rung 2). Thereafter, the program continuously does block reads and writes.

Figure 6.2
PLC-5 Family Sample Program Structure

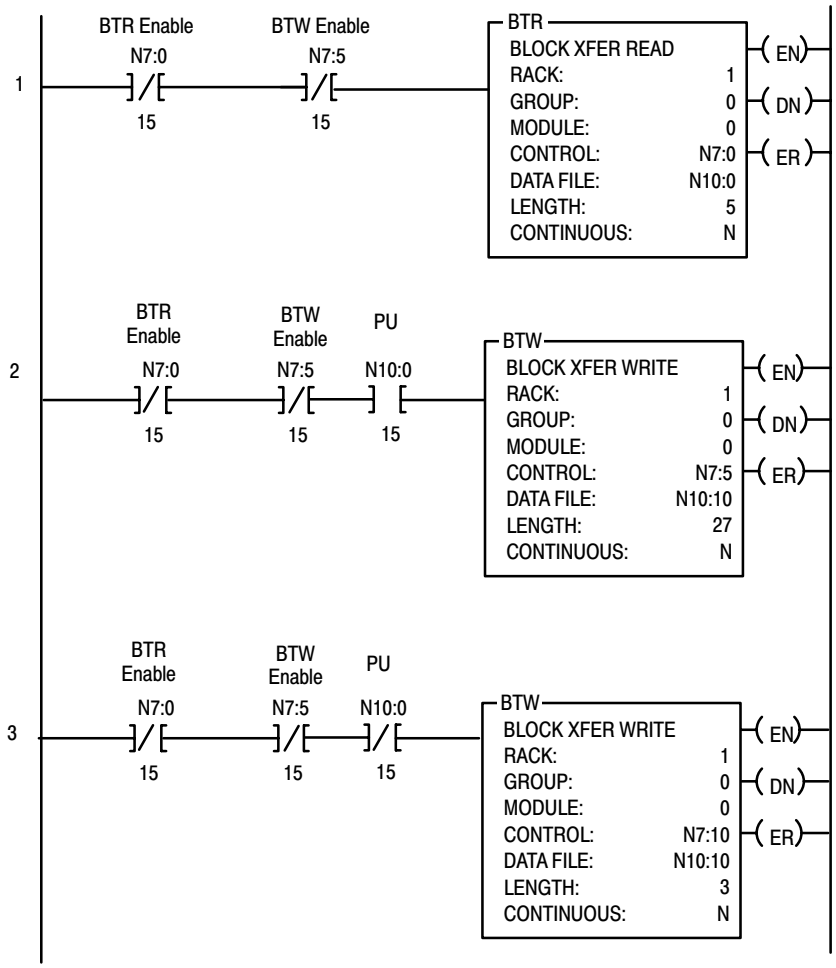

Sample Programs for Analog Block

The following are sample programs for using your modules more efficiently when operating with the PLC-3 or PLC-5 family processors.

These programs show you how to:

- configure the module
- read data from the module
- update the output channels

Refer to the proper PLC-3 or PLC-5 documentation for additional information on processor programming and data entry.

An analog block requires BTWs or discrete data to configure it and update its output data. BTRs or discrete data are required to send back input data and module status.

PLC-3 Family Processors

The following PLC-3 program can be altered to effectively address analog block modules.

Figure 6.3
PLC-3 Family Sample Program Structure

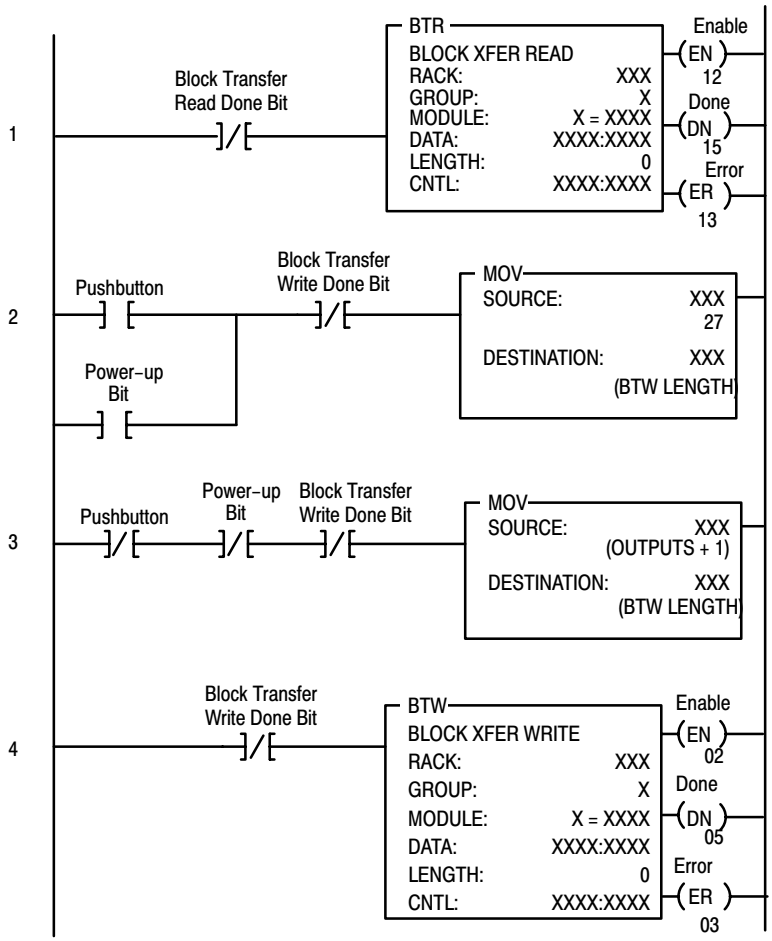

PLC-5 Family Processors

The following PLC-5 program is very similar to the PLC-3 program with the following exceptions:

- You must use enable bits instead of done bits as the conditions on each rung.
- Rungs 2 and 3 have been replaced with 1 rung.
- A separate control file must be selected for each of the block transfer instructions.

Figure 6.4
PLC-5 Family Sample Program Structure

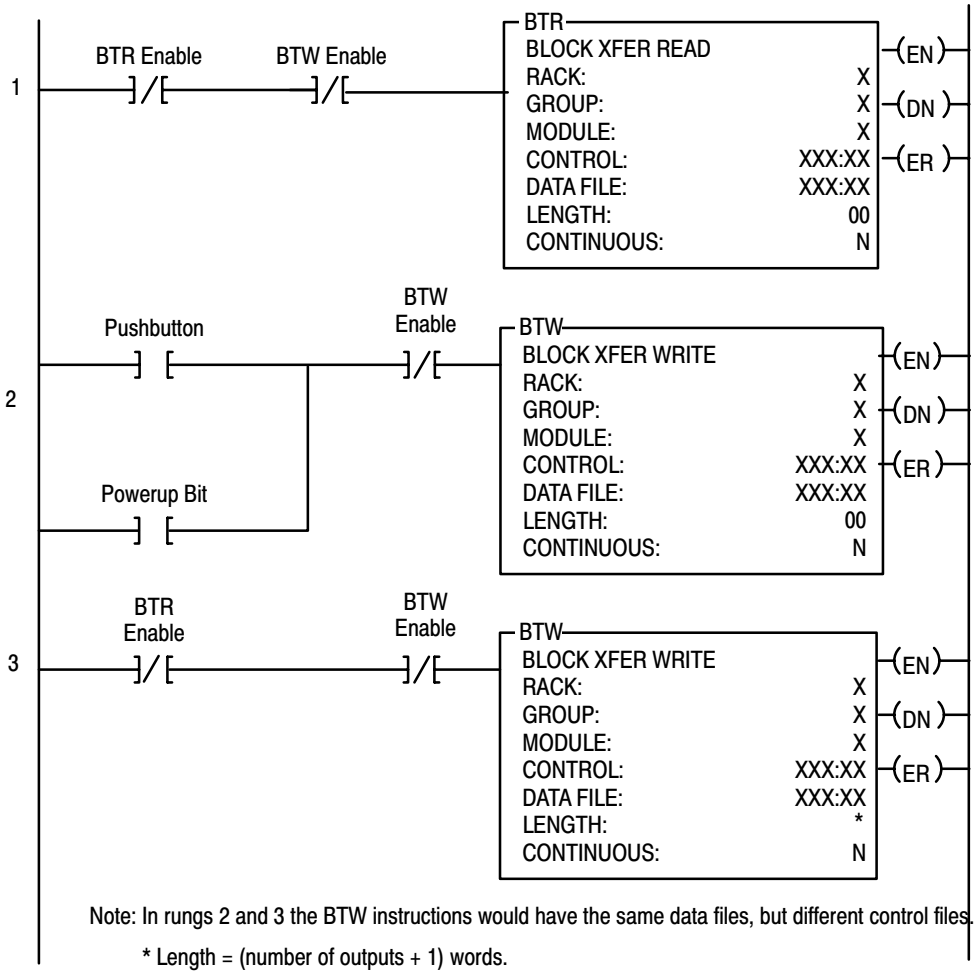

Note: In rungs 2 and 3 the BTW instructions would have the same data files, but different control files.

* Length = (number of outputs + 1) words.

Chapter 7

Module Calibration

Chapter Objective

In this chapter we tell you how to calibrate your module.

Tools and Equipment

To calibrate your analog module, you will need the following tools and equipment:

Tool or Equipment	Description
Precision Voltage Source	0–10V, 1µV resolution
Precision Multimeter	25mA, 1µA resolution 10V, 1µV resolution
Programming Terminal and Interconnect Cable	Programming terminal for A–B family processors

Calibrating your Module

Your analog module is shipped **already calibrated** from the factory. To recalibrate the module, it must be able to communicate with the processor and a programming terminal.

If the processor has block transfer capability, you must enter ladder logic into the processor memory before calibrating the module. You can then initiate BTWs to the module, and the processor can read inputs from the module (BTRs).

Table 7.A
Calibration Block Transfer Write Data File or Discrete Output Data File

Discrete Octal Bit	17	16	15	14	13	12	11	10	07	06	05	04	03	02	01	00
Discrete Decimal Bit	**15**	**14**	**13**	**12**	**11**	**10**	**09**	**08**	**07**	**06**	**05**	**04**	**03**	**02**	**01**	**00**
Word 0	1	1	0	0	WR			IM	EX	HL	O1	O0	I3	I2	I1	I0
Word 1	Output Channel 0 Calibration Data															
Word 2	Output Channel 1 Calibration Data															

Table 7.B
Calibration Block Transfer Write or Discrete Output Bit/Word Descriptions

Word	Decimal Bit (Octal Bit)	Description
Word 0	Bit 00	Input select bit. Indicates input channel 0 being calibrated.
	Bit 01	Input select bit. Indicates input channel 1 being calibrated.
	Bit 02	Input select bit. Indicates input channel 2 being calibrated.
	Bit 03	Input select bit. Indicates input channel 3 being calibrated.
	Bit 04	Output select bit. Indicates output channel 0 being calibrated.
	Bit 05	Output select bit. Indicates output channel 1 being calibrated.
	Bit 06	High/low bit **HL**. Indicates whether full scale or zero data point is being updated: Bit 06 = 1 – full scale Bit 06 = 0 – zero data point
	Bit 07	Execute Bit. **EX**. When set (1), starts calibration and updates the selected channels.
	Bit 08 (10)	Input Mode Bit **IM**. Bit 08 (10) = 0 – Use for voltage inputs. Input scaling in mV Bit 08 (10) = 1 – Use for current inputs. Input scaling in µA
	Bits 9-10 (11-12)	Not used
	Bit 11 (13)	EEPROM write bit **OK**. When set (1), requests the current calibration data be saved.
	Bits 12-15 (14-17)	Calibration mode bits. Set to 1100 to select a calibration sequence.
Word 1	Bits 00-15 (00-17)	Output Channel 0 Calibration Data – user entered calibration data when EX = 0 (bit 07 in word 0), scaled and corrected output data when DN bit (bit 07 in BTR) = 1.
Word 2	Bits 00-15 (00-17)	Output Channel 1 Calibration Data – user entered calibration data when EX = 0 (bit 07 in word 0), scaled and corrected output data when DN bit (bit 07 in BTR) = 1.

Table 7.C
Calibration Block Transfer Read Data File

Word/ Octal Bit	17	16	15	14	13	12	11	10	07	06	05	04	03	02	01	00
Word/Decimal Bit	**15**	**14**	**13**	**12**	**11**	**10**	**09**	**08**	**07**	**06**	**05**	**04**	**03**	**02**	**01**	**00**
0	1	1	0	0	OK			IM	DN	HL	O1	O0	I3	I2	I1	I0
1	Corrected Input Channel 0 Data															
2	Corrected Input Channel 1 Data															
3	Corrected Input Channel 2 Data															
4	Corrected Input Channel 3 Data															

Table 7.D
Calibration Block Transfer Read or Discrete Input Bit/Word Descriptions

Word	Decimal Bit (Octal Bit)	Description
Word 0	Bit 00	Input calibration error bit. When set, indicates input channel 0 calibration error.
	Bit 01	Input calibration error bit. When set, indicates input channel 1 calibration error.
	Bit 02	Input calibration error bit. When set, indicates input channel 2 calibration error.
	Bit 03	Input calibration error bit. When set, indicates input channel 3 calibration error.
	Bit 04	Output calibration error bit. When set, indicates output channel 0 calibration error.
	Bit 05	Output calibration error bit. When set, indicates output channel 1 calibration error.
	Bit 06	High/Low bit **HL**. Indicates whether full scale or zero data point is being updated: Bit 6 = 1 – full scale Bit 6 = 0 – zero data point
	Bit 07	Calibration Done bit **DN**. When set (1), indicates calibration started and selected channels updated.
	Bit 08 (10)	Input Mode bit **IM**. Bit 8 = 0 – Use for voltage inputs. Input scaling in mV Bit 8 = 1 – Use for current inputs. Input scaling in µA
	Bits 09-10 (11-12)	Not used.
	Bit 11 (13)	EEPROM OK bit (OK). When set, indicates the calibration data has been saved.
	Bits 12-15 (14-17)	Calibration mode bits. Indicates the calibration sequence is selected.
Word 1	Bits 00-15 (00-17)	Corrected Input Data for Channel 0 using most recent calibration data.
Word 2	Bits 00-15 (00-17)	Corrected Input Data for Channel 1 using most recent calibration data.
Word 3	Bits 00-15 (00-17)	Corrected Input Data for Channel 2 using most recent calibration data.
Word 4	Bits 00-15 (00-17)	Corrected Input Data for Channel 3 using most recent calibration data.

Table 7.E
Discrete Transfer Input Data File

Word/Bit	Description
0	Corrected Input Channel 0 Data
1	Corrected Input Channel 1 Data
2	Corrected Input Channel 2 Data
3	Corrected Input Channel 3 Data

Table 7.F
Discrete Transfer Input Bit/Word Descriptions

Word/Bit	Description
0	Corrected Input Data for Channel 0 using most recent calibration data.
1	Corrected Input Data for Channel 1 using most recent calibration data.
2	Corrected Input Data for Channel 2 using most recent calibration data.
3	Corrected Input Data for Channel 3 using most recent calibration data.

Calibrating Voltage Inputs

Use the procedure below to calibrate the voltage inputs on your analog block I/O module. The procedure can be used for either PLC or SLC systems.

You can calibrate any single input or output individually or, you can calibrate them simultaneously.

Important: To allow the module to stabilize, energize the module for at least 30 minutes before calibrating.

To calibrate your module:

1. Connect your test equipment for the input you want to calibrate. This is shown in the figure below.

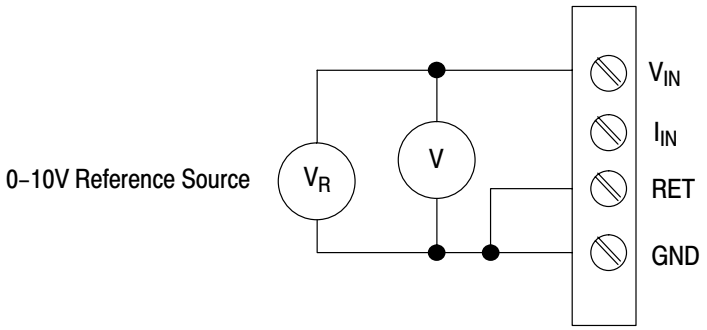

Important: You can calibrate all four inputs simultaneously by wiring them in parallel.

2. Verify normal operation.

3. Select calibration mode, voltage input mode and the input channels you want to calibrate.

For example, to calibrate input channel 0, set bits 15 (17), 14 (16) and 01 of BTW word 0 (C001h).

4. Apply 0.000V to inputs.

5. Set the EX bit (bit 07 of BTW word 0).

- For PLC systems: Monitor the DN bit (BTR word 0, bit 07) until it is set (1).
- For SLC systems: Allow at least 5 seconds before continuing.

6. Reset (0) the EX bit (BTW word 0, bit 07) and set (1) the HL bit (BTW word 0, bit 06).

7. Apply full scale voltage (+10.000V) to the inputs you are calibrating.

8. Set (1) the EX bit.

- For PLC systems: Monitor the DN bit (BTR word 0, bit 07) until it is set (1).
- For SLC systems: Allow at least 5 seconds before continuing.

9. Verify the input calibration by doing the following:

- Make sure your terminal is in decimal radix mode

Important: Input values are scaled in millivolts.

- Vary the input reference over ±10V range.
- Ensure the module input indications in the appropriate BTR words are within acceptable limits.
- Repeat steps 3–9 if necessary

Important: At this point, if you are not satisfied with your calibration, you can cycle power to the block to restore the previous calibration constants. If you move on to Step 10 of this procedure, the present calibration data constants will overwrite the previous constants, making the previous constants inaccessible.

10. Set (1) the WR bit 11 (13) in BTW word 0.

- For PLC systems: Monitor the OK bit 11 (13) in BTR word 0 until it is set (1).
- For SLC systems: Allow at least 5 seconds before continuing.

11. Exit the calibration mode.

Calibrating Current Inputs

Use the procedure below to calibrate the current inputs on your analog block I/O module. The procedure can be used for either PLC or SLC systems.

You can calibrate any single input or output individually or, you can calibrate them simultaneously.

Important: To allow the module to stabilize, **energize the module for at least 30 minutes** before calibrating.

To calibrate your module:

1. Connect your test equipment for the input you want to calibrate. This is shown in the figure below.

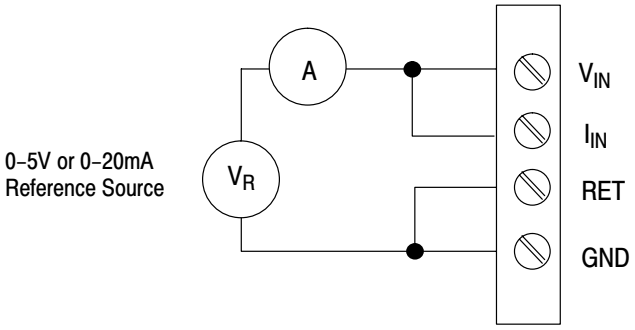

Important: To calibrate four current inputs simultaneously, you need four independant current sources.

2. Verify normal operation.

3. Select calibration mode, current input mode and the input channels you want to calibrate.

For example, to calibrate input channel 0, set bits 15 (17), 14 (16), 08 (10) and 01 of BTW word 0 (C101h).

4. Apply 0.000 milliamps to inputs.

5. Set the EX bit (bit 07 of BTW word 0).

- For PLC systems: Monitor the DN bit (BTR word 0, bit 07) until it is set (1).
- For SLC systems: Allow at least 5 seconds before continuing.

6. Reset (0) the EX bit (BTW word 0, bit 07) and set (1) the HL bit (BTW word 0, bit 06).

7. Apply full scale current (+20.000 milliamps) to the inputs you are calibrating.

8. Set (1) the EX bit.

- For PLC systems: Monitor the DN bit (BTR word 0, bit 07) until it is set (1).
- For SLC systems: Allow at least 5 seconds before continuing.

9. Verify the input calibration by doing the following:

- Make sure your terminal is in decimal radix mode

Important: Input values are scaled in microamps.

- Vary the input reference over the 0 to 20 milliamps range.
- Make sure the module input indications in the appropriate BTR words are within acceptable limits.
- Repeat steps 3–9 if necessary

Important: At this point, if you are not satisfied with your calibration, you can cycle power to the block to restore the previous calibration constants. If you move on to Step 10 of this procedure, the present calibration data constants will overwrite the previous constants, making the previous constants inaccessible.

10. Set (1) the WR bit 11 (13) of BTW word 0.

- For PLC systems: Monitor the OK bit 11 (13) of BTR word 0 until it is set (1).
- For SLC systems: Allow at least 5 seconds before continuing.

11. Exit the calibration mode.

Calibrating Voltage Outputs (1791-N4V2 and 1791-NDV)

Use the procedure below to calibrate voltage outputs of the analog block I/O module. The procedure can be used for either PLC or SLC systems.

The most accurate results are obtained by installing an optional load resistor which approximates the output load for the intended application.

Important: To allow the module to stabilize, energize the module for at least 30 minutes before calibrating.

To calibrate your module:

1. Connect your test equipment for the output you want to calibrate. This is shown in the figure below.

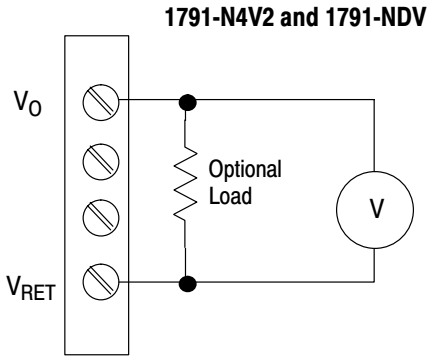

Important: You can calibrate both outputs simultaneously.

2. Verify normal operation.

3. Select the calibration mode and the output and input channels you want to calibrate.

For example, to calibrate input channel 0, set bits 15 (17), 14 (16), and 04 of BTW word 0 (C010h).

4. Measure the zero point with a precision meter. Enter the measured voltage in millivolts into the BTW word (word 1 for channel 0, word 2 for channel 1).

5. Set the EX bit (bit 07 of BTW word 0).

- For PLC systems: Monitor the DN bit (BTR word 0, bit 07) until it is set (1).
- For SLC systems: Allow at least 5 seconds before continuing.

6. Reset (0) the EX bit (BTW word 0, bit 07) and set (1) the HL bit (BTW word 0, bit 06).

7. Measure the full scale point with a precision meter. Enter the measured voltage in millivolts into the BTW word (word 1 for channel 0, word 2 for channel 1).

8. Set (1) the EX bit.

- For PLC systems: Monitor the DN bit (BTR word 0, bit 07) until it is set (1).
- For SLC systems: Allow at least 5 seconds before continuing.

9. Verify the input calibration by doing the following:

- Make sure your terminal is in decimal radix mode

Important: Output values are scaled in millivolts.

- Vary the output value in the appropriate BTW words over the ±10V range.
- Make sure the meter indicates the outputs are within acceptable limits.
- Repeat steps 3–9 if necessary

Important: At this point, if you are not satisfied with your calibration, you can cycle power to the block to restore the previous calibration constants. If you move on to Step 10 of this procedure, the present calibration data constants will overwrite the previous constants, making the previous constants inaccessible.

10. Set (1) the WR bit 11 (13) of BTW word 0.

- For PLC systems: Monitor the OK bit 11 (13) of BTR word 0 until it is set (1).
- For SLC systems: Allow at least 5 seconds before continuing.

11. Exit the calibration mode.

Calibrating Current Outputs (1791-N4C2 and 1791-NDC)

Use the procedure below to calibrate current outputs of the analog block I/O module. The procedure can be used for either PLC or SLC systems.

You can calibrate any single input or output individually or, you can calibrate them simultaneously.

Important: To allow the module to stabilize, **energize the module for at least 30 minutes** before calibrating.

To calibrate your module:

1. Connect your test equipment for the input you want to calibrate. This is shown in the figure below.

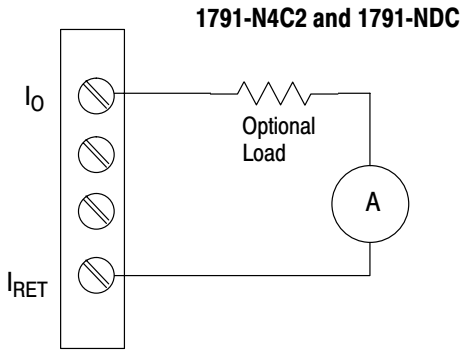

Important: You can calibrate both outputs simultaneously.

2. Verify normal operation.

3. Select the calibration mode and the output and input channels you want to calibrate.

For example, to calibrate input channel 0, set bits 15 (17), 14 (16), and 04 of BTW word 0 (C010h).

4. Measure the zero point with a precision meter. Enter the measured current in milliamps into the BTW word (word 1 for channel 0, word 2 for channel 1).

5. Set the EX bit (bit 07 of BTW word 0).

- For PLC systems: Monitor the DN bit (BTR word 0, bit 07) until it is set (1).
- For SLC systems: Allow at least 5 seconds before continuing.

6. Reset (0) the EX bit (BTW word 0, bit 07) and set (1) the HL bit (BTW word 0, bit 06).

7. Measure the full scale point with a precision meter. Enter the measured current in milliamps into the BTW word (word 1 for channel 0, word 2 for channel 1).

8. Set (1) the EX bit.

- For PLC systems: Monitor the DN bit (BTR word 0, bit 07) until it is set (1).
- For SLC systems: Allow at least 5 seconds before continuing.

9. Verify the input calibration by doing the following:

- Make sure your terminal is in decimal radix mode

Important: Output values are scaled in microamps.

- Vary the output value in the appropriate BTW words over the 0 to 20 milliamp range.
- Make sure the meter indicates the outputs are within acceptable limits.
- Repeat steps 3–9 if necessary

Important: At this point, if you are not satisfied with your calibration, you can cycle power to the block to restore the previous calibration constants. If you move on to Step 10 of this procedure, the present calibration data constants will overwrite the previous constants, making the previous constants inaccessible.

10. Set (1) the WR bit 11 (13) of BTW word 0.

- For PLC systems: Monitor the OK bit 11 (13) of BTR word 0 until it is set (1).
- For SLC systems: Allow at least 5 seconds before continuing.

11. Exit the calibration mode.

Calibration Example for the 1791-N4V2 Block I/O Module

The following example shows you how to calibrate the inputs and outputs for the 1791-N4V2 block I/O module.

1. For inputs – short all RET and GND together and short $V_{in}0$ thru $V_{in}3$ together. Connect voltage sources and meter between Vin and GND. For outputs – connect meter and load to each output.
2. Verify normal operation.
3. Set the terminal radix to hexidecimal and set BTW word 0 to C03Fh.
4. Set the voltage source to 0.000V and set the terminal radix to decimal. Enter the output meter reading in BTW words 1 and 2.
5. Set the terminal radix to hexidecimal and set BTW word 0 to C0BFh.
6. Set BTW word 0 to C07Fh.
7. Set the voltage source to 10.000V and set the terminal radix to decimal. Enter the output meter reading in BTW words 1 and 2.
8. Set the terminal radix to hexidecimal and set BTW word 0 to C0FFh.
9. Set the terminal radix to decimal and verify module operation.
10. Set the terminal radix to hexidecimal and set BTW word 0 to C8FFh.
11. Return to normal default operation by setting BTW word 0 to 0800h.

Chapter 8

Troubleshooting

Chapter Objectives

In this chapter you will learn about the indicators on the block I/O module, and how to use them to troubleshoot the unit.

Module Indicators

Each block I/O module has indicators (Figure 8.1) which provide indication of module status. Each module has the following:

Indicator	Color	Quantity	Description
COMM	Green	1	Indicates whether communication is occurring between processor or scanner and the block module
FAULT	Red	1	Indicates hardware or software error, and if communication has failed
POWER	Green	1	When on, indicates that the module is powered up

Figure 8.1 shows the location of the indicators. Refer to Table 8.A for status indications reported by the indicators.

Figure 8.1
Indicators on the Block I/O Module

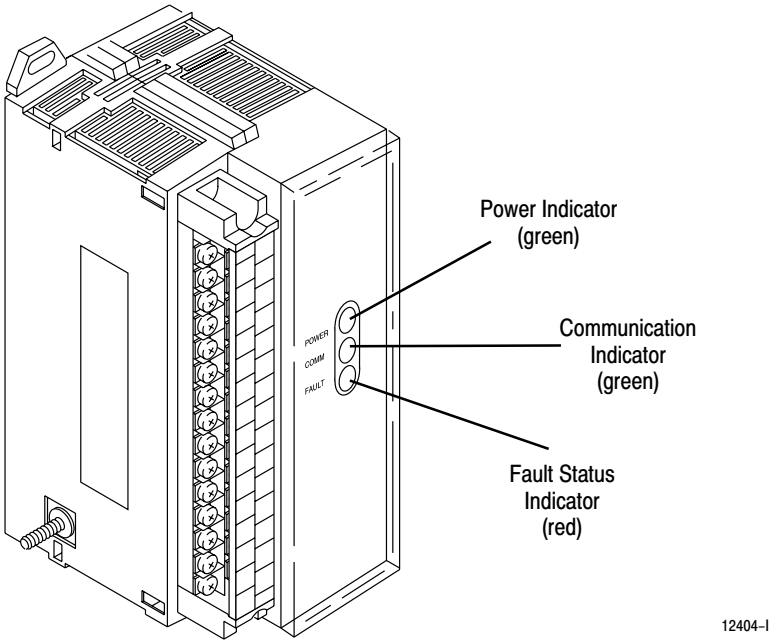

Table 8.A
Troubleshooting Chart

Indication		Description
Power	OFF ON	No power Power okay
COMM	OFF ON Flashing	Communications not established Communication established Reset commands being received in Program mode
FAULT	OFF ON Flashing	Normal Error (hardware or software), block power low COMM FAIL – communication cable disconnected, 100ms between valid frames, no more than 255 valid frames between valid frames addressed to block, 20ms idle time exceeded.

COMM and FAULT will alternately flash when processor restart lockout is selected, a fault has occurred and the processor is communicating with the block.

Appendix A

Specifications

Module	Specifications on:
1791-N4C2	Page A-1
1791-N4V2	Page A-3
1791-NDC	Page A-5
1791-NDV	Page A-7

1791-N4C2 Specifications

Input Specifications	
Inputs per Block	4 Selectable
Type of Input	±10V (14 bit) ±5V (14 bit) 0–10V (14 bit) 0–5V (14 bit) 0–20mA (14 bit) ±20mA (14 bit)
Update Rate per Channel	108ms
Input Impedance	Voltage: 10 megohm Current: 250 ohm
Absolute Accuracy	0.1% @ 25ºC
Linearity	0.05% @ 25ºC
Common Mode Rejection	–75db
Normal Mode Rejection	–18db @ 50Hz –20db @ 60Hz
Output Specifications	
Outputs per Block	2
Output Current Range	0–20mA (13 bits)
Output Impedance	Greater than 1 megohm
Internal Update Rate per Channel	10ms
Drive Capability	20mA into loads of 1K ohms or less
Short Circuit Protection	Indefinite
Absolute Accuracy	0.1% @ 25ºC
Linearity	0.05% @ 25ºC (over 4-20mA range)
Overall Accuracy Drift	75 ppm/ºC
+24V Loop Power Voltage Current	20-28V dc unregulated 100mA

Specifications continued on next page

1791-N4C2 Specifications

General Specifications		
Number of Channels	Input Output	4 2
Resolution		14 bits full scale inputs 13 bits full scale outputs
Input Band Width		5Hz
Overvoltage Protection **ATTENTION:** The 249 ohm input current shunt is rated at 0.25 Watts. Do not exceed this rating.	Input Output	140V ac 140V ac
External Power	Voltage Current	85–132V ac, 47–63Hz 150mA
Dimensions	Inches Millimeters	6.95H X 2.7W X 3.85D 176.5H X 68.8W X 98D
Isolation	Inputs to Outputs Power and Chassis to I/O RIO and Chassis to Power and I/O	500V ac 1000V ac 1000V ac
Power Dissipation	Maximum	16.9 Watts
Thermal Dissipation	Maximum	57.63 BTU/hr
Environmental Conditions Operational Temperature Storage Temperature Relative Humidity		 0 to 60ºC (32 to 140ºF) –40 to 85ºC (–40 to 185ºF) 5 to 95% noncondensing
Conductors	Wire Size Category	14 gauge (2mm^2) stranded maximum 3/64 inch insulation maximum 1[1]

[1] You use this conductor category information for planning conductor routing as described in the system level installation manual.

1791-N4V2 Specifications

Input Specifications	
Inputs per Block	4 Selectable
Type of Input	±10V (14 bit) ±5V (14 bit) 0–10V (14 bit) 0–5V (14 bit) 0–20mA (14 bit) ±20mA (14 bit)
Update Rate per Channel	108ms
Input Impedance	Voltage: 10 megohm Current: 250 ohm
Absolute Accuracy	0.1% @ 25ºC
Linearity	0.05% @ 25ºC
Common Mode Rejection	–75db
Normal Mode Rejection	–18db @ 50Hz –20db @ 60Hz
Output Specifications	
Outputs per Block	2
Output Voltage Range	±10V (14 bits)
Output Impedance	Less than 1 ohm
Update Rate per Channel	10ms
Output Voltage Compliance	±10.00V into loads of 1K ohms or larger
Short Circuit Protection	Indefinite
Absolute Accuracy	0.1% @ 25ºC
Linearity	0.05% @ 25ºC
Overall Accuracy Drift	75 ppm/ºC
+24V Loop Power Voltage Current	20-28V dc unregulated 100mA

Specifications continued on next page

1791-N4V2 Specifications

General Specifications		
Number of Channels	Input Output	4 2
Resolution		14 bits full scale
Input Band Width		5Hz
Overvoltage Protection **ATTENTION:** The 249 ohm input current shunt is rated at 0.25 Watts. Do not exceed this rating.	Input Output	140V ac 140V ac
External Power	Voltage Current	85–132V ac, 47–63Hz 150mA
Dimensions	Inches Millimeters	6.95H X 2.7W X 3.85D 176.5H X 68.8W X 98D
Isolation	Inputs to Outputs Power and Chassis to I/O RIO and Chassis to Power and I/O	500V ac 1000V ac 1000V ac
Power Dissipation	Maximum	16.9 Watts
Thermal Dissipation	Maximum	57.63 BTU/hr
Environmental Conditions Operational Temperature Storage Temperature Relative Humidity		 0 to 60ºC (32 to 140ºF) –40 to 85ºC (–40 to 185ºF) 5 to 95% noncondensing
Conductors	Wire Size Category	14 gauge (2mm^2) stranded maximum 3/64 inch insulation maximum 1[1]

[1] You use this conductor category information for planning conductor routing as described in the system level installation manual.

1791-NDC Specifications

Input Specifications	
Inputs per Block	4 Selectable
Type of Input	±10V (14 bit) ±5V (14 bit) 0–10V (14 bit) 0–5V (14 bit) 0–20mA (14 bit) ±20mA (14-bit)
Update Rate per Channel	108ms
Input Impedance	Voltage: 10 megohm Current: 250 ohm
Absolute Accuracy	0.1% @ 25ºC
Linearity	0.05% @ 25ºC
Common Mode Rejection	–75db
Normal Mode Rejection	–18db @ 50Hz –20db @ 60Hz
Output Specifications	
Outputs per Block	2
Output Current Range	0–20mA (13 bits)
Output Impedance	Greater than 1 megohm
Internal Update Rate per Channel	10ms
Drive Capability	20mA into loads of 1K ohms or less
Short Circuit Protection	Indefinite
Absolute Accuracy	0.1% @ 25ºC
Linearity	0.05% @ 25ºC (over 4-20mA range)
Overall Accuracy Drift	75 ppm/ºC
+24V Loop Power Voltage Current	20-28V dc unregulated 100mA
Specifications continued on next page	

1791-NDC Specifications

General Specifications		
Number of Channels	Input Output	4 2
Resolution		14 bits full scale inputs 13 bits full scale outputs
Input Band Width		5Hz
Overvoltage Protection **ATTENTION:** The 249 ohm input current shunt is rated at 0.25 Watts. Do not exceed this rating.	Input Output	140V ac 140V ac
External Power	Voltage Current	19.2-30V dc 600mA
Dimensions	Inches Millimeters	6.95H X 2.7W X 3.85D 176.5H X 68.8W X 98D
Isolation	Inputs to Outputs Power and Chassis to I/O RIO and Chassis to Power and I/O	500V ac 500V ac 500V dc
Power Dissipation	Maximum	11.52 Watts
Thermal Dissipation	Maximum	39.28 BTU/hr
Environmental Conditions Operational Temperature Storage Temperature Relative Humidity		 0 to 60ºC (32 to 140ºF) –40 to 85ºC (–40 to 185ºF) 5 to 95% noncondensing
Conductors	Wire Size Category	14 gauge (2mm^2) stranded maximum 3/64 inch insulation maximum 1[1]

[1] You use this conductor category information for planning conductor routing as described in the system level installation manual.

1791-NDV Specifications

Input Specifications	
Inputs per Block	4 Selectable
Type of Input	±10V (14 bit) ±5V (14 bit) 0–10V (14 bit) 0–5V (14 bit) 0–20mA (14 bit) ±20mA (14-bit)
Update Rate per Channel	108ms
Input Impedance	Voltage: 10 megohm Current: 250 ohm
Absolute Accuracy	0.1% @ 25ºC
Linearity	0.05% @ 25ºC
Common Mode Rejection	–75db
Normal Mode Rejection	–18db @ 50Hz –20db @ 60Hz
Output Specifications	
Outputs per Block	2
Output Voltage Range	±10V (14 bits)
Output Impedance	Less than 1 ohm
Update Rate per Channel	10ms
Output Voltage Compliance	±10.00V into loads of 1K ohms or larger
Short Circuit Protection	Indefinite
Absolute Accuracy	0.1% @ 25ºC
Linearity	0.05% @ 25ºC
Overall Accuracy Drift	75 ppm/ºC
+24V Loop Power Voltage Current	20-28V dc unregulated 100mA

Specifications continued on next page

1791-NDV Specifications

General Specifications		
Number of Channels	Input Output	4 2
Resolution		14 bits full scale
Input Band Width		5Hz
Overvoltage Protection **ATTENTION:** The 249 ohm input current shunt is rated at 0.25 Watts. Do not exceed this rating.	Input Output	140V ac 140V ac
External Power	Voltage Current	19.2–30V dc 600mA
Dimensions	Inches Millimeters	6.95H X 2.7W X 3.85D 176.5H X 68.8W X 98D
Isolation	Inputs to Outputs Power and Chassis to I/O RIO and Chassis to Power and I/O	500V ac 500V ac 500V ac
Power Dissipation	Maximum	11.52 Watts
Thermal Dissipation	Maximum	39.28 BTU/hr
Environmental Conditions Operational Temperature Storage Temperature Relative Humidity		 0 to 60ºC (32 to 140ºF) –40 to 85ºC (–40 to 185ºF) 5 to 95% noncondensing
Conductors	Wire Size Category	14 gauge (2mm^2) stranded maximum 3/64 inch insulation maximum 1[1]

[1] You use this conductor category information for planning conductor routing as described in the system level installation manual.

ALLEN-BRADLEY
A ROCKWELL INTERNATIONAL COMPANY

Allen-Bradley has been helping its customers improve productivity and quality for 90 years. A-B designs, manufactures and supports a broad range of control and automation products worldwide. They include logic processors, power and motion control devices, man-machine interfaces and sensors. Allen-Bradley is a subsidiary of Rockwell International, one of the world's leading technology companies.

With major offices worldwide.

Algeria • Argentina • Australia • Austria • Bahrain • Belgium • Brazil • Bulgaria • Canada • Chile • China, PRC • Colombia • Costa Rica • Croatia • Cyprus • Czech Republic • Denmark • Ecuador • Egypt • El Salvador • Finland • France • Germany • Greece • Guatemala • Honduras • Hong Kong • Hungary • Iceland • India • Indonesia • Israel • Italy • Jamaica • Japan • Jordan • Korea • Kuwait • Lebanon • Malaysia • Mexico • New Zealand • Norway • Oman • Pakistan • Peru • Philippines • Poland • Portugal • Puerto Rico • Qatar • Romania • Russia–CIS • Saudi Arabia • Singapore • Slovakia • Slovenia • South Africa, Republic • Spain • Switzerland • Taiwan • Thailand • The Netherlands • Turkey • United Arab Emirates • United Kingdom • United States • Uruguay • Venezuela • Yugoslavia

World Headquarters, Allen-Bradley, 1201 South Second Street, Milwaukee, WI 53204 USA, Tel: (1) 414 382-2000 Fax: (1) 414 382-4444

Publication 1791–6.5.5 – March 1994
Supersedes publication 1791-6.5.5 dated April 1993

P/N 955115–92