CENTERLINE 800 A One-High Cabinet, Standard and Arc-Resistant Enclosure

Bulletin Numbers 1512A, 1512AT, 1512DM, 1512M

Allen-Bradley
by ROCKWELL AUTOMATION

User Manual

Original Instructions

Important User Information

Read this document and the documents listed in the additional resources section about installation, configuration, and operation of this equipment before you install, configure, operate, or maintain this product. Users are required to familiarize themselves with installation and wiring instructions in addition to requirements of all applicable codes, laws, and standards.

Activities including installation, adjustments, putting into service, use, assembly, disassembly, and maintenance are required to be carried out by suitably trained personnel in accordance with applicable code of practice.

If this equipment is used in a manner not specified by the manufacturer, the protection provided by the equipment may be impaired.

In no event will Rockwell Automation, Inc. be responsible or liable for indirect or consequential damages resulting from the use or application of this equipment.

The examples and diagrams in this manual are included solely for illustrative purposes. Because of the many variables and requirements associated with any particular installation, Rockwell Automation, Inc. cannot assume responsibility or liability for actual use based on the examples and diagrams.

No patent liability is assumed by Rockwell Automation, Inc. with respect to use of information, circuits, equipment, or software described in this manual.

Reproduction of the contents of this manual, in whole or in part, without written permission of Rockwell Automation, Inc., is prohibited.

Throughout this manual, when necessary, we use notes to make you aware of safety considerations.

WARNING: Identifies information about practices or circumstances that can cause an explosion in a hazardous environment, which may lead to personal injury or death, property damage, or economic loss.

ATTENTION: Identifies information about practices or circumstances that can lead to personal injury or death, property damage, or economic loss. Attentions help you identify a hazard, avoid a hazard, and recognize the consequence.

IMPORTANT Identifies information that is critical for successful application and understanding of the product.

Labels may also be on or inside the equipment to provide specific precautions.

SHOCK HAZARD: Labels may be on or inside the equipment, for example, a drive or motor, to alert people that dangerous voltage may be present.

BURN HAZARD: Labels may be on or inside the equipment, for example, a drive or motor, to alert people that surfaces may reach dangerous temperatures.

ARC FLASH HAZARD: Labels may be on or inside the equipment, for example, a motor control center, to alert people to potential Arc Flash. Arc Flash will cause severe injury or death. Wear proper Personal Protective Equipment (PPE). Follow ALL Regulatory requirements for safe work practices and for Personal Protective Equipment (PPE).

Preface

Summary of Changes 7
About This Publication 7
Download Firmware, AOP, EDS, and Other Files 7

Chapter 1

Installation - Standard Enclosure

Recommended Torque Values 9
Starter Identification 9
Door Opening Procedure 11
Opening the Low Voltage Doors 11
Opening the Medium Voltage Doors 11
Anchoring 12
Joining the Sections 13
Access to the Power Bus 14
Rear Access 14
Side Access 15
Front Access – Top Incoming Load Cables 15
Front Access – Bottom Incoming Line Cables 17
Load Cable Connections 18

Chapter 2

Installation - Arc Resistant Enclosure

Door Opening Procedure 21
Opening the Low Voltage Doors 21
Opening the Medium Voltage Doors 22
Anchoring 23
Access Power Bus 25
Rear Access 25
Side Access 26
Front Access – Top Entry 27

Chapter 3

Common Installation

Bus Splicing 33
Power Bus 33
Insulated Power Bus Splicing 35
Ground Bus 35
Incoming Line Cable Connections 36
Hi-Pot and Insulation Resistance Test 37
Start-up Procedure 37
Vacuum Contactor Inspection 37
Preliminary Checks 38
Testing the Contactor Operation 38

Chapter 4

Maintenance

Tool Requirements 41
Door Interlock Circumvention 42
Power Lockout Procedure 43
Fuse Removal and Replacement 46
Bolt-on Fuses 46
Bolt-on Fuse Removal and Installation 47
Contactor Maintenance 47
Removing the Contactor 47
Contactor Interlock Rod Adjustment 49
Reduce the Gap Distance 49
Increase the Gap Distance 50
Isolation Switch Mechanism Inspection and Maintenance 51
Isolation Switch Mechanism Grounding Adjustment 52
Auxiliary Contacts Inspection and Replacement 53
Isolation Switch Auxiliary Contacts 54
Adjusting the Normally Open (ISa) Contacts 54
Adjusting the Normally Closed (ISb) Contacts 55
Adjusting the Change of State Point 56
Emergency Circumvention Procedure for Power Cell Entry 56

Chapter 5

Spare Parts

Spare Parts List 59

Appendix A

ArcShield Unit Information

Overview 61
ArcShield Design 61
Exhaust Systems: Chimney or Plenum Option 62
Plenum Information 62
Plenum Exhaust Considerations 63
Additional Notes 65
Chimney Information 66
Chimney Exhaust Considerations 66

Appendix B

ArcShield Plenum Installation Instructions

Recommended Torque Values 67
Plenum Bracing 67
General Plenum Layout for ArcShield Line-up 69
STEP 1 – Mounting a Single Plenum 70
Cabinet Preparation 70
Plenum Placement on Structure 71
STEP 2 – Alignment of ‘Side-by-Side’ Plenums 72
STEP 3 – Sequence of Final Assembly 72
STEP 4 – Closing the Front of the Plenum Sections 73
STEP 5 – Extension and Elbow Assembly 73
STEP 6 – Mounting Extension/Elbow to Plenum Line-up 75
STEP 7 – Additional Mounting Support 76

ArcShield Chimney Installation Instructions

Appendix C

Recommended Torque Values 77
General Plenum Layout for ArcShield Line-up 78
Cabinet Preparation 78
Chimney Placement on Structure 79

Integrated Protective Maintenance Grounding Device

Appendix D

Overview 81
IPMG Operation 82
Operating Handle 83
IPMG Positioning Indicators 84
Key Interlocking 85
Auxiliary Switches 85
IPMG Specifications 86
Maintenance 87
Spare Parts 87

History of Changes

Appendix E

. 89

Notes:

Summary of Changes

This publication contains the following new or updated information. This list includes substantive updates only and is not intended to reflect all changes.

Topic	Page
Added specific information around using stress cones	18, 29, 36
Added 3000 A power bus graphic	34
Added section on isolation switch maintenance	51
Added Appendix D, Integrated Protective Maintenance Grounding device	81
Added History of Changes	89

About This Publication

This document pertains to the Rockwell Automation® Bulletin 1512A medium voltage (MV) controller. The Bulletin 1512A structure provides one complete MV controller unit.

The product Bulletin numbers that are covered by this document are:

- 1512A 800A FVNR controller
- 1512AT 800A transformer feeder

IMPORTANT This document is used for all Bulletin 800 A 1512A unit types, including arc resistant (ArcShield™) units. Important information specifically for ArcShield units can be found in Appendix A, Appendix B, and Appendix C.

ATTENTION: See the information in Appendix A, Appendix B, and Appendix C to install and maintain ArcShield arc resistant units. Failure to do so can negate the arc resistant benefits that are provided by ArcShield, which exposes personnel to risk of serious injury or death.

This document can also be used as a reference guide for these Bulletin numbers:

- 1512DM 800A (FVIO) Input Contactor with Output Isolator
- 1512M 800A (FVOP) Output Bypass Controller

Download Firmware, AOP, EDS, and Other Files

Download firmware, associated files (such as AOP, EDS, and DTM), and access product release notes from the Product Compatibility and Download Center at rok.auto/pcdc.

Notes:

Installation - Standard Enclosure

IMPORTANT For installation of ArcShield™ arc resistant equipment, refer to Chapter 2.

IMPORTANT For information on the installation site preparation, see General Handling Procedures for MV Products, publication MV-QS050.

ATTENTION: Use personal protective equipment (PPE) per local codes or regulations. Failure to do so can result in severe burns, injury, or death.

Recommended Torque Values

When you are installing components, or when assembling the cabinet, tighten these bolt sizes to the specified torque values.

Table 1 - Torque Values

1/4 in. hardware	6 lb•ft (8 N•m)
5/16 in. hardware	12 lb•ft (15 N•m)
3/8 in. hardware	20 lb•ft (27 N•m)
1/2 in. hardware	48 lb•ft (65 N•m)

Starter Identification

A nameplate is attached to the right-side flange of the structure (Figure 1). See the nameplate for information such as series number, section number, NEMA (National Electrical Manufacturers Association) enclosure type, unit ratings, and bus ratings.

Figure 1 - Typical Structure Nameplate

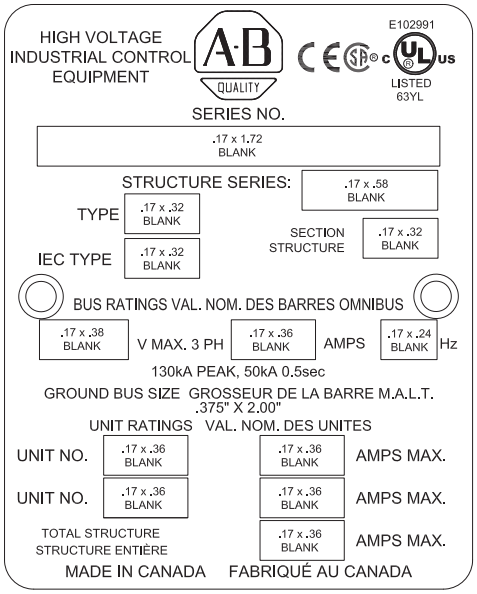

A nameplate is also found in the low voltage compartment (see Figure 2) with unit motor application information.

Figure 2 - Typical Unit Nameplate

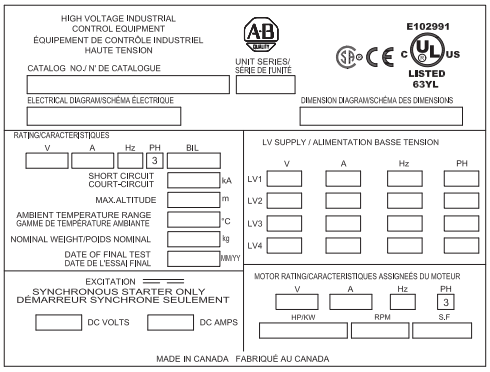

Refer to these nameplates whenever you contact Rockwell Automation for assistance. Be prepared to provide such information as series number, structure series, unit series, diagram schematic, and catalog number.

Door Opening Procedure

Opening the Low Voltage Doors

Low voltage door is identified as LV in Figure 3.

1. To access the low voltage compartment, use a flat-head screwdriver to turn both 1/4-turn fasteners on the low voltage door, counterclockwise 90°. See Figure 3.
2. The door is now released and swings open.
3. To secure the door, reverse the procedure.

Figure 3 - Access to Low Voltage Compartments, Standard Enclosure

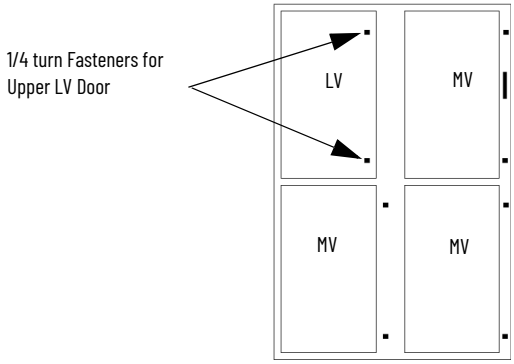

Opening the Medium Voltage Doors

Medium voltage (MV) doors are identified in Figure 4.

Figure 4 - Access to Medium Voltage Compartments, Standard Enclosure

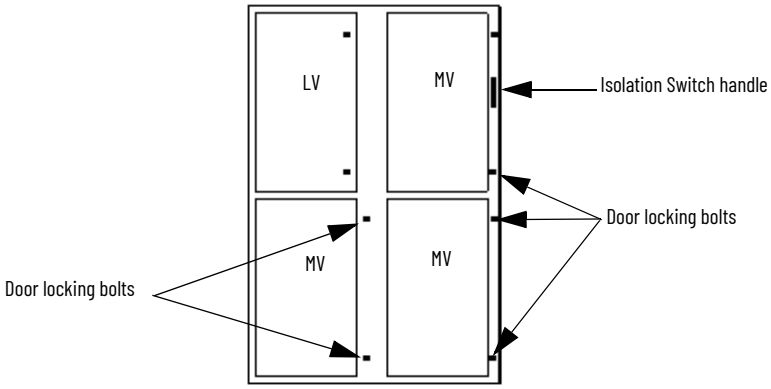

The MV door has its own isolation switch handle and the interlocking safeguards.

See Access to the Power Bus on page 14, for the procedure to open the swing-out low voltage (LV) panel behind the low voltage (LV) door (for standard cabinet only).

1. Press the STOP button on the starter or at the remote control location. Both open the contactor electrically.
2. Move the isolation switch handle to the OFF position.
3. Unscrew the locking 3/8-1.75 bolts for the upper right-hand MV door.

   The door is now released.
4. Open the upper right-hand MV door by swinging it open.

5. Pull the interlock release lever forward. The Interlock release lever is at the bottom right corner of the door opening.

IMPORTANT The bottom MV doors cannot be opened until the interlock release lever is pulled forward.

6. Open the bottom right-hand door by unscrewing the locking 3/8-1.75 bolts.
7. Unbolt and open the bottom left door.
8. Close the doors by reversing the procedure.

IMPORTANT Verify that the swing-out low voltage panel is in its original position before attempting to close the medium voltage (MV) door. When closing the MV doors, verify all door locking-bolts on the right side of the MV door are in place. Tightened the bolts until the door is even with the flange. Do not over tighten the bolts. If the door is not securely fastened, the isolation switch handle cannot be moved to the ON position.

ATTENTION: Complete the Power Lockout Procedure on page 43 before beginning any service procedures to the unit. Failure to do so can result in severe burns, injury, or death.

Anchoring

Place the controller in the required installation location. Use M12 (1/2 in.) floor mounting-bolts to fasten the controller to the mounting surface. See Figure 5 as an example of the location of the mounting holes in the cabinet.

IMPORTANT See the Dimension Drawing for additional details that are related to the cabinet floor plan.

IMPORTANT Pre-determined cabinets are designed for Uniform Building Code (UBC) seismic zone 1, 2A, 2B, 3, 4, and IBC (International Building Code) seismic activity without overturning or lateral movement. Provided they are securely mounted according to UBC, IBC, and the local building codes. This restriction can include concrete pad design, steel floor design and the sizing of cabinet anchors. Concrete floor cutouts must not be next to floor anchor bolts and must be sized to seismic load. If an accredited engineer must review the floor mounting, consult the factory. Many jurisdictions require an engineer from the local area to review the design. Seismic qualification does not indicate that the equipment will function properly after a seismic event.

Figure 5 - Cabinet Floor Plan

Ⓐ Line Cable Conduit opening.

Ⓑ Load Cable Conduit opening.

Ⓒ Control Wire Conduit opening.

Ⓓ Mounting Holes for M12 (1/2 in.) Diameter Anchor Bolts.

Ⓔ Removable Lifting Angle (2).

Ⓕ 1.00 [25] X 3.00 [76] Non- removeable Sill Channels.

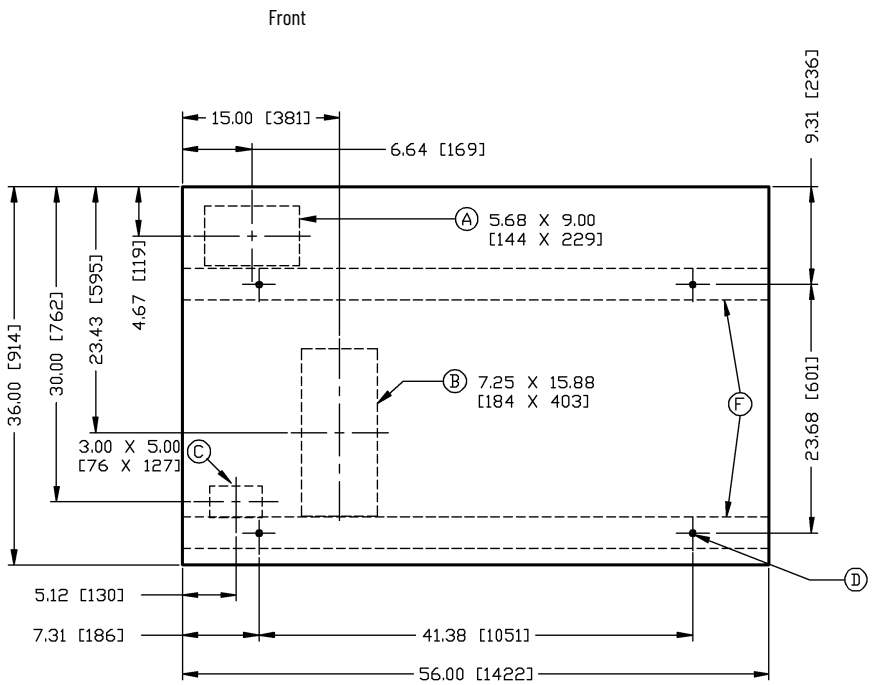

IMPORTANT FOR SEISMIC APPLICATIONS

For installations on concrete – the minimum depth and radius of concrete that supports the cabinet anchors is dependent on seismic loads. See Anchoring on page 12 for important information.

For installations on a metal structure – the metal plate depth and the method to anchor the cabinet is dependent on seismic loads.

Joining the Sections

IMPORTANT The joining hardware can be found in a package mounted to the front of the shipping skid. See Publication MV-QS050 requirements for a level floor surface.

1. Position the left side section on a level surface and secure the section in place with M12 (1/2 in.) floor mounting-bolts (see Anchoring on page 12).
2. When joining NEMA/EEMAC Type 12 sections, apply a continuous 3 mm (0.125 in.) bead of silicon around the perimeter of one section.
3. Remove the side bus access covers, if applicable.
4. Position the right section against the left section. Make sure that the surface is level.
5. Secure the sections together with 1/4-20 self-tapping screws (12 lb•ft [15 N•m]). Thread the screw through the 0.281 in. clearance hole to the corresponding 0.219 in. pilot hole. To access the front clearance holes of the left-side cabinet, open the medium voltage (MV) doors. To access the rear clearance holes, remove the rear covers of the starter. If rear access is not available, refer to Front Access – Top Incoming Load Cables on page 15 or Front Access – Bottom Incoming Line Cables on page 17.
6. Secure the right section to the floor using ½ in. (M12) floor mounting-bolts (see Anchoring on page 12).

Figure 6 - Joining the Sections

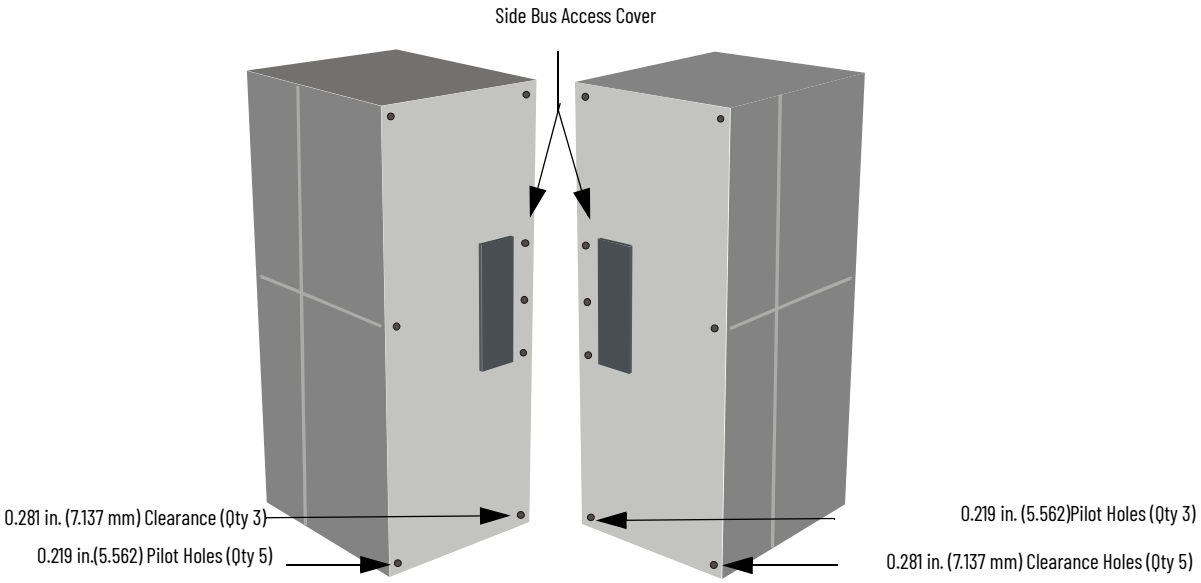

Access to the Power Bus

ATTENTION: This procedure requires contact with medium voltage (MV) components. To avoid shock hazards and stop incoming power, do the Power Lockout Procedure on page 43. Verify that all circuits are voltage free by using a hot stick or appropriate device that measures voltage. Failure to do so can result in severe burns, injury, or death.

Rear Access

1. Remove the hardware that secures the center rear bus access-cover (Figure 7).
2. Remove the center rear bus access-cover.
3. When the rear bus cover is removed, you see the three power bus bars and grounding bus (Figure 8).

Figure 7 - Access to Power Bus From Side and Rear Cabinet, typical

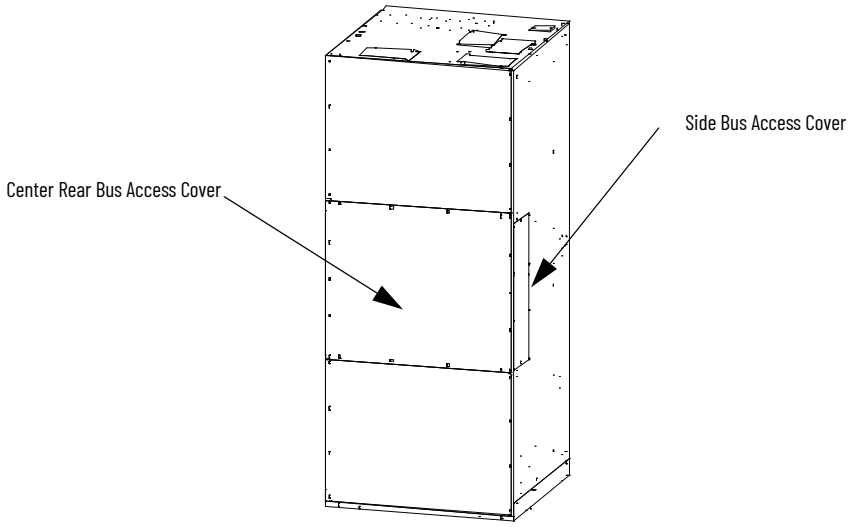

Figure 8 - Bus Bars from Back Access

Side Access

A side bus access cover is on each side of the controller.

1. Remove the hardware from the appropriate side bus access cover.
2. Remove the side bus access cover.
3. When the side bus access cover is removed, you see the three power bus bars and grounding bus (Figure 9).

Figure 9 - Side Bus Access Cover Removed

Front Access – Top Incoming Load Cables

1. Complete the Power Lockout Procedure on page 43 for medium-voltage power cells and the power bus.
2. Open the low-voltage cell door (see page 11).
3. Open the medium-voltage cell doors (see page 11).
4. Remove the 1/4-20 self-tapping screws from the low voltage panel if installed. Installed for shipment purposes – Figure 10.

Figure 10 - Removal of Access Panel with Low Voltage Panel Rotated.

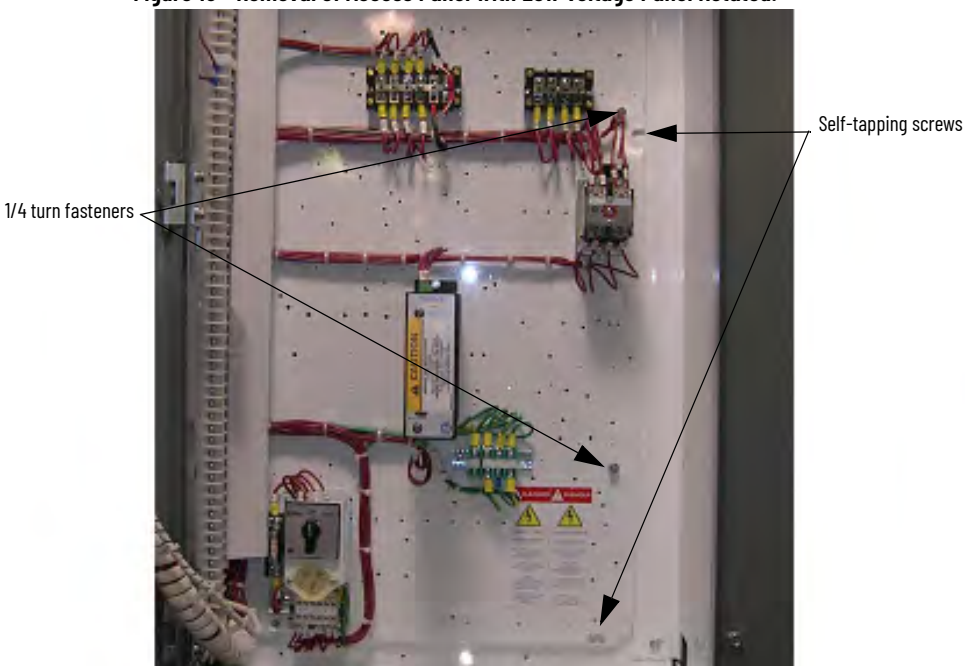

5. Use a flat head screwdriver to turn the 1/4 turn fasteners counterclockwise 180°.
6. Pull on right-hand side of low voltage panel. Swing the low voltage panel to the front and left of cabinet (see Figure 12).

IMPORTANT	Before the low voltage panel is rotated, the power cell door must be in a fully opened position.

7. Locate the removable bus access barriers.

Figure 11 - Access to Power Bus with Low Voltage Panel Rotated

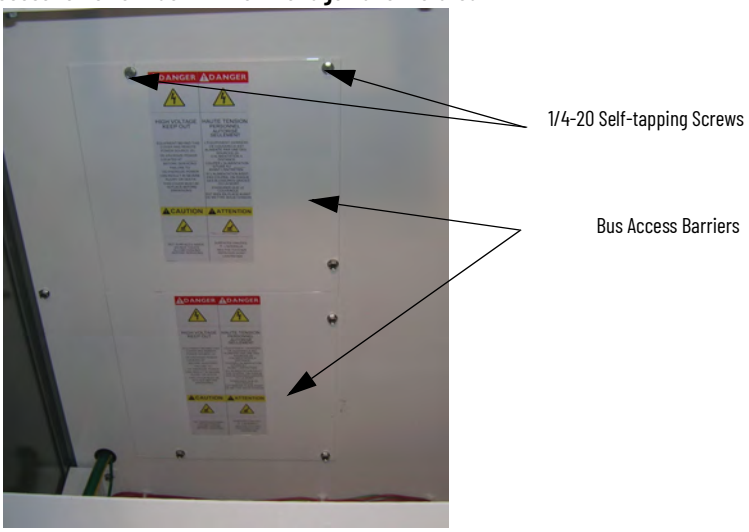

8. Remove the retaining 1/4-20 self-tapping screws from removable bus access barrier. The incoming cable connections to main bus are exposed (see Figure 12).

Figure 12 - Power Bus with Barrier Removed

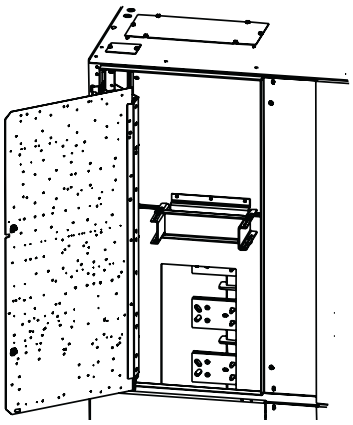

9. Install the incoming line cables to power bus. Torque to recommended values on page 9.
10. Reverse procedure after cables are installed.

ATTENTION: Make sure that all barriers are installed before re-energizing the equipment. Failure to do so can result in electrical faults, damage equipment, or severe injury to personnel.

Front Access – Bottom Incoming Line Cables

If the incoming cables in your cabinet enter the section from the bottom, follow the same procedure as for Front Access – Top Incoming Load Cables on page 15.

1. Open all power cell doors.
2. Locate incoming cable duct at rear left-hand side of power cell (see Figure 13).
3. Remove the 1/4-20 self-tapping screws from the cable duct access-barriers. Remove barriers.
4. Route and install incoming line cables up to power bus. Torque to the recommended values specified on page 9.
5. Reverse procedure after cables are installed.

Figure 13 - Access to Bottom Incoming Cables

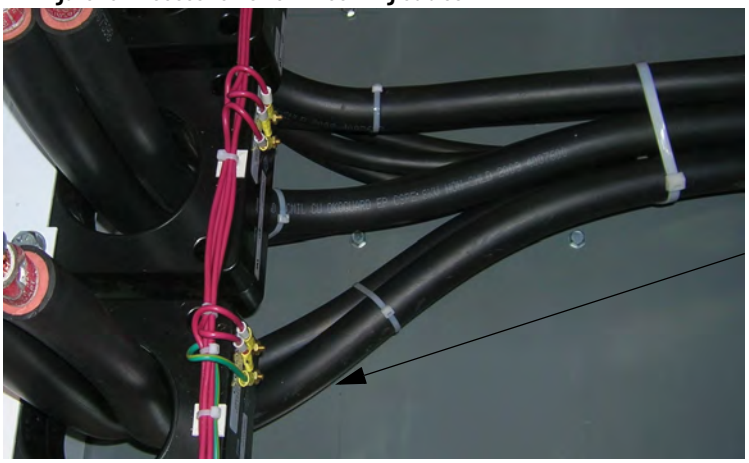

ATTENTION: Make sure that all barriers are installed before re-energizing the equipment. Failure to do so can result in electrical faults, damage equipment, or severe injury to personnel.

Load Cable Connections

ATTENTION: To avoid shock hazards and lockout incoming power, do the Power Lockout Procedure on page 43 before working on the equipment. Verify that all circuits are voltage free by using a hot stick or appropriate device that measures voltage. Failure to do so can result in severe burns, injury, or death.

IMPORTANT The current transformers can be positioned for top or bottom cable exit. Follow the appropriate procedure that is described for your starter configuration.

IMPORTANT Cable size cannot exceed 1-1000 MCM, 2-750 MCM, 3-500MCM, or 4-500 MCM per phase.

Stress cones should be internal, non-skirted style only. Do not use external (skirted-style) stress cones due to space considerations.

IMPORTANT See Dimensional Drawings that are provided with order documentation for additional details that are related to cabinet floor plan.

1. Complete the Power Lockout Procedure on page 43.
2. Remove the appropriate cable conduit-opening plate from the cabinet (see Figure 14...Figure 17). The plate can be punched or cut to mount conduit.
3. Route load cables for the power cell before control cables. Pull the cables into the cabinet through the appropriate opening (see Figure 14...Figure 17).
4. Connect the cables to the terminal assembly and tighten the 1/2-13 hardware to 45 lb•ft (61 N•m).
5. Connect cable shields (if present) to the ground lug.
6. Reinstall the current transformer barrier and reassemble the cabinet.

Figure 14 - Access to Load Cable Conduit Openings (Top Exit Configuration Shown)

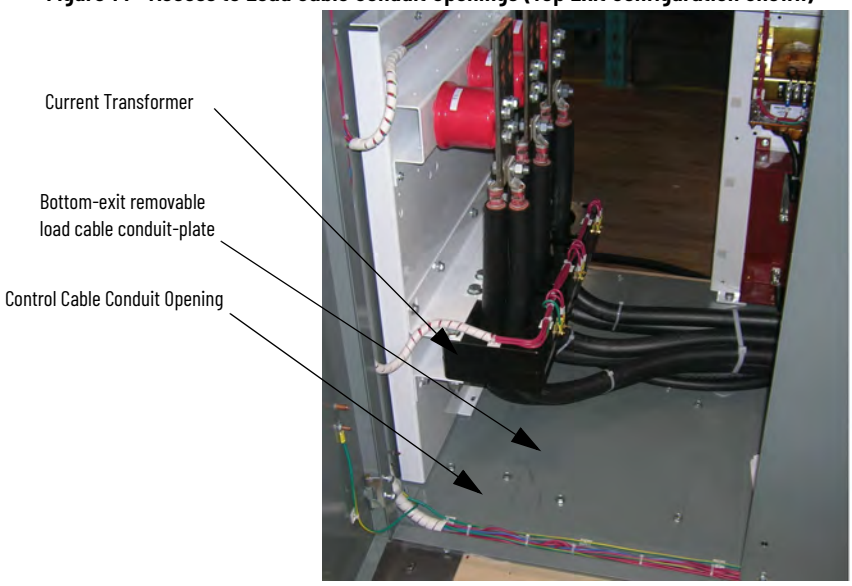

Figure 15 - Load Cable Conduit Openings, Bottom Exit

Ⓐ Line Cable Conduit Opening.

Ⓑ Load Cable Conduit Opening.

Ⓒ Control Wire Conduit Opening.

Ⓓ Mounting Holes for M12 (1/2 in.)Diameter Anchor Bolts.

Ⓔ Removable handle lifting angles (2).

Ⓕ 1.00 [25] x 3.00 [76] Non-removable Sill Channels.

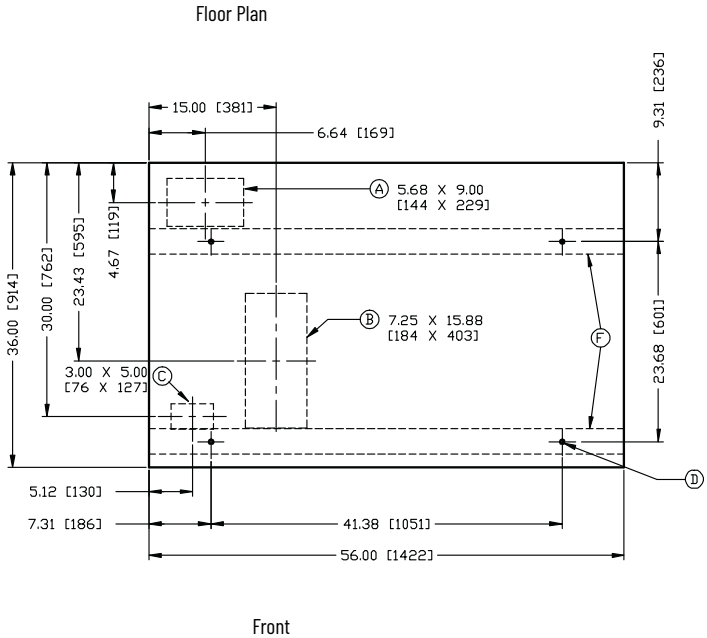

Figure 16 - Routing of Load Cables (Top exit shown)

Current Transformer

ATTENTION: Install all barriers before re-energizing the equipment. Failure to do so can result in electrical faults and damage equipment or severe injury to personnel.

Figure 17 - Load Cable Conduit Openings, Top Exit

Roof Plan

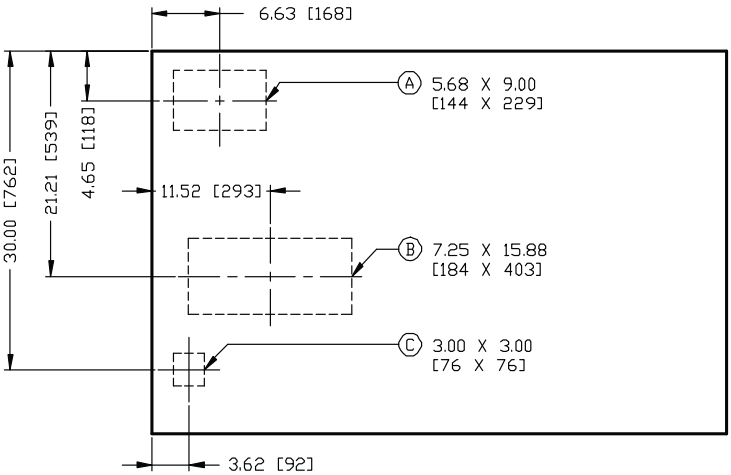

Front

Ⓐ Line Cable Conduit Opening.

Ⓑ Load Conduit Opening.

Ⓒ Control Wire Conduit Opening.

Installation – Arc Resistant Enclosure

This installation section contains information on the Rockwell Automation® ArcShield™ arc resistant enclosure.

IMPORTANT For information on the installation site preparation, see General Handling Procedures for MV Products, publication MV-QS050. The levelness of floors must meet the levelness specification that is outlined in this document.

ATTENTION: Use suitable personal protective equipment (PPE) per local codes or regulations. Failure to do so can result in severe burns, injury, or death.

Door Opening Procedure

Opening the Low Voltage Doors

Low voltage doors are identified as LV in Figure 18 on page 21.

1. To access the low voltage control compartments for ArcShield cabinets, turn the black release handle counter-clockwise 90° (to a 3 o'clock position).
2. The low voltage compartment door is now released and swings open.
3. To secure the low voltage compartment doors, reverse the procedure.

Figure 18 - Access to Low Voltage Compartments, Arc Resistant

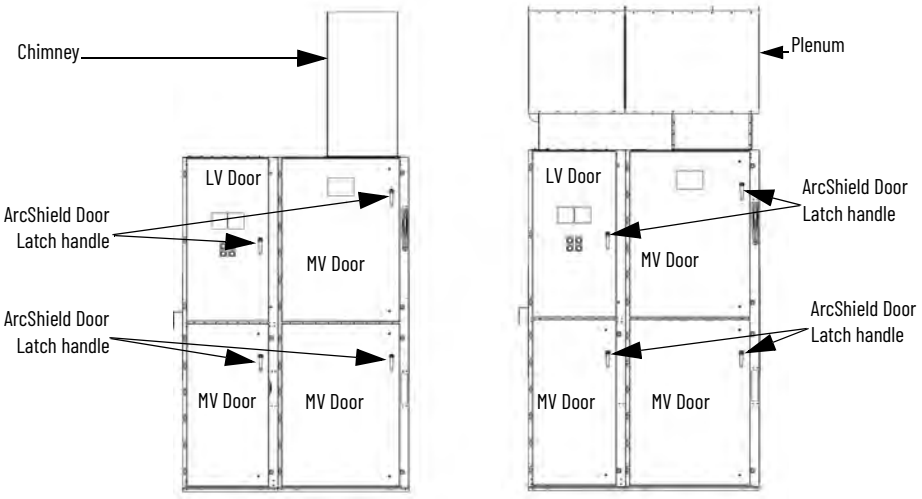

ATTENTION: Complete the Power Lockout Procedure on page 43 before beginning any service procedures to the unit. Failure to do so can result in severe burns, injury, or death.

Opening the Medium Voltage Doors

IMPORTANT	All medium voltage doors are interlocked to the isolation switch handle. The low voltage panel compartment and power cell are separated by an isolation barrier.

The medium voltage (MV) doors are identified as MV in Figure 18 on page 21.

IMPORTANT	Failure to follow the procedure for Opening the Medium Voltage Door could damage or jam the mechanical door interlocks. Damage or a jam could result in the mechanical interlocks not operating as intended and could result in the door becoming jammed in the closed position.

IMPORTANT	On all ArcShield starters, the sticker that is shown in Figure 19 is attached to each door for your reference.

1. Press the STOP button on the starter or at the remote control location.
2. Move the isolation switch handle to the OFF position.
3. Turn the black release handle for the upper right-hand MV door, counter-clockwise 90°(to a 3 o'clock position). Only rotate the arc latching handle when the door locking bolts are tightened (see Figure 19). The arc latching-mechanism can be damaged by forcing the arc latching handle.
4. Unscrew the locking 3/8-1.75 bolts for the upper right-hand MV door.
5. Swing open the door that is now released.
6. Turn the black release handle, for the lower right-hand MV door, counter-clockwise 90°(to a 3 o'clock position).
7. Remove the 3/8-1.75 bolts for the lower right-hand MV door..
8. Swing open the door that is now released.
9. Turn the black release handle, for the lower left-hand MV door, counter-clockwise 90°(to a 3 o'clock position).
10. Remove the 3/8-1.75 bolts for the lower left-hand MV door.
11. Swing open the door that is now released.
12. To close the doors, reverse the procedure. Tighten the 3/8-1.75 door lock-bolts by hand until threads are engaged.
13. Verify all six 3/8-1.75 door locking bolts, on the right-hand side of the MV doors, are in place and tightened until there is no gap between the side sheet flange and door-locking bolt collar. DO NOT CROSSTHREAD OR OVER TIGHTEN.
14. Turn all black release handles counterclockwise 90°(to a 3 o'clock position). Failure to place the black handles in this position render the cabinet arc resistant capabilities ineffective. See Figure 19 on page 23.

Figure 19 - Label on Arc Resistant Door

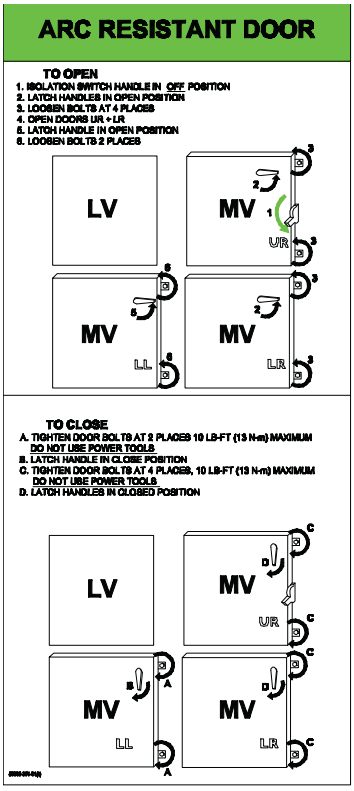

ATTENTION: Do not over tighten the bolts.

The top right MV door must be securely fastened for the isolation switch handle to move to the ON position. All MV doors must be securely bolted closed before the ArcShield latch handles are rotated.

Only rotate the arc latching handle when the locking bolts are tightened (refer to Figure 19). The arc latching mechanism can be damaged by forcing the arc latching handle.

ATTENTION: Complete the Power Lockout Procedure on page 43 before beginning any service procedures to the unit. Failure to do so can result in severe burns, injury, or death.

Anchoring

Place the controller in the required installation location. Fasten the controller to the mounting surface by using floor mounting bolts M12 (1/2in.).
See Figure 20 as an example of the location of the mounting holes in the cabinet.

IMPORTANT All mounting holes must be used to seal the cabinet. Failure to use or fill all mounting holes with hardware result in an unplanned release of arc gases.

IMPORTANT See Dimension Drawing provided with order documentation for additional details that are related to cabinet floor plan.

IMPORTANT Pre-determined cabinets are designed for Uniform Building Code (UBC) seismic zone 1, 2A, 2B, 3, and 4, and IBC (International Building Code) seismic activity without overturning or lateral movement. Provided they are securely mounted according to UBC, IBC, and the local building codes. Mounting can include concrete pad design, steel floor design and the sizing of cabinet anchors. Concrete floor cutouts must not be next to floor anchor bolts and must be sized to seismic load. If an accredited engineer must review the floor mounting, consult the factory. Many jurisdictions require an engineer from the local area to review the design. Seismic qualification does not indicate that the equipment will function properly after a seismic event.

Figure 20 - Cabinet Floor Plan – Top Entry/Exit Units, Arc Resistant Cabinet

Ⓐ Line Cable Conduit Opening.

Ⓑ Load Cable Conduit Opening.

Ⓒ Control Wire Conduit Opening.

Ⓓ Plenum is removed and shipped separately. Customer must install.

Ⓔ Mounting Holes for M12 (1/2 in.) Diameter Anchor Bolts.

Ⓕ Removable Lifting Angles.

Ⓖ 1.00 [25] x 30 [76] Non-removable Sill Channels.

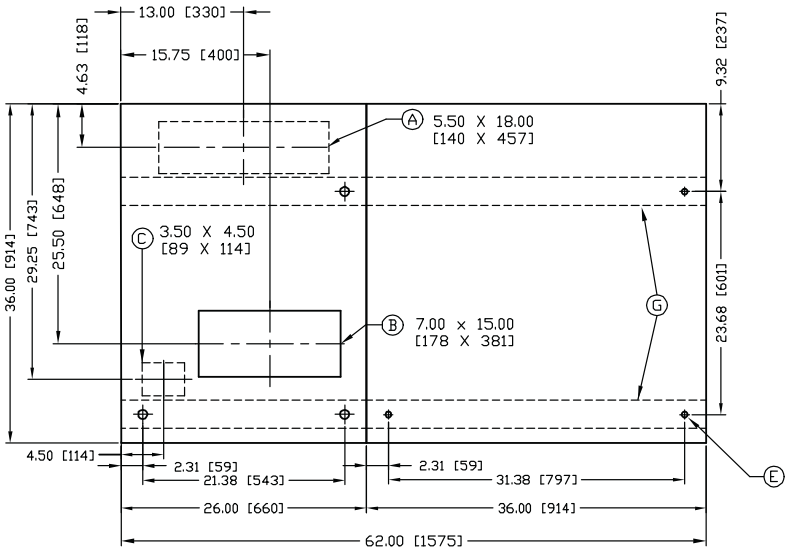

IMPORTANT The joining hardware can be found in a package mounted to the front of the shipping skid. See publication MV-QS050 for level floor surface requirements.

1. Remove the side bus access covers if applicable.
2. Position the left side section on a level surface and secure the section in place using floor mounting bolts M12 (1/2 in.). See Anchoring on page 23).
3. When joining ArcShield sections, apply a continuous 3 mm (0.1250 in.) wide bead of silicon sealer around the entire outer perimeter of one section
4. Apply a continuous 3 mm (0.1250 in.) wide bead of silicon sealer around the cutout for the power bus.
5. Position the right section against the left section. Make sure that the surface is level.
6. Secure the sections together with the 1/4-20 self-tapping screws (12 lb•ft [15N•m]). Thread the screw through the 0.281 in. clearance hole to the corresponding 0.219 in. pilot hole. To access the front clearance holes of the left-side cabinet, open the medium voltage doors. Access the rear clearance holes by removing the rear covers of the starter. If rear access is not available, refer to Front Access – Top Entry on page 27.

7. Secure the entire perimeter of the horizontal bus. Use the provided 1/4-20 thread fasteners (12 lb•ft [15 N•m]). Make sure that there is a continuous bead of silicone seal around the bus bar opening on one cabinet.
8. Secure the right section to the floor by using floor mounting bolts M12 (1/2 in.). See Anchoring on page 23).

IMPORTANT ArcShield units at the end of a line-up have a ground connection to the outside side bus access-cover (see Figure 23 and Figure 24). This connection must be maintained for unit arc resistant performance.

IMPORTANT All anchor and adjacent cabinet-side holes that are used to secure the cabinet must be filled with hardware. Failure to have hardware in any of these holes compromise the arc resistant characteristics of the cabinet.

Figure 21 - Joining the Sections

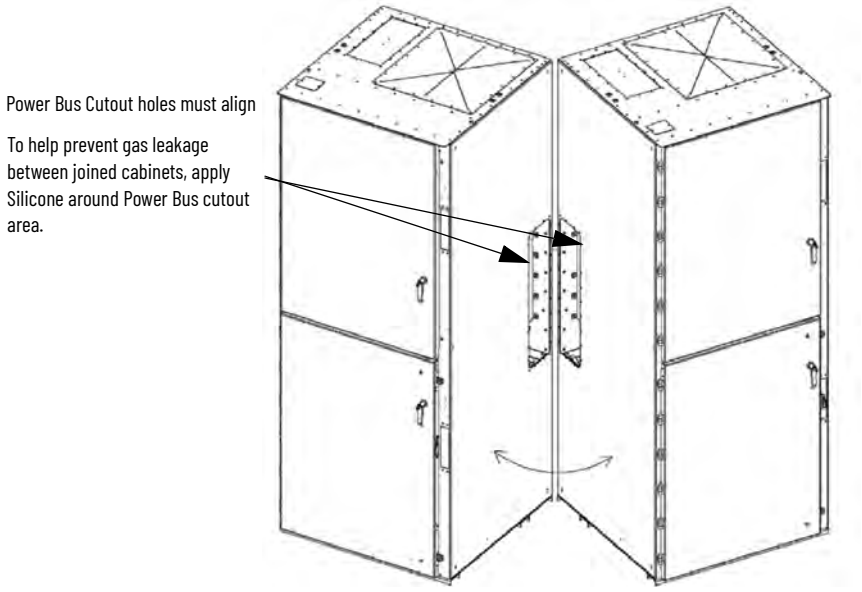

Access Power Bus

ATTENTION: This procedure requires contact with medium voltage components. To avoid shock hazards and lockout incoming power, do thePower Lockout Procedure on page 43 before working on the equipment. Verify that all circuits are voltage free by using a hot stick or appropriate device that measures voltage. Failure to do so ca result in severe burns, injury, or death.

Rear Access

1. Remove the hardware securing the center rear bus access-cover (Figure 22).

ATTENTION: The rear cover plates are made from 12 gauge metal and are mounted in board of the main structure. The cover drops inside if care is not taken as you remove the mounting bolts.

2. Remove the center rear bus access-cover.

3. When the rear bus cover is removed, you see the three power bus bars (Figure 24) and grounding bus.

Figure 22 - Access to Power Bus from Side and Rear of Cabinet, Typical

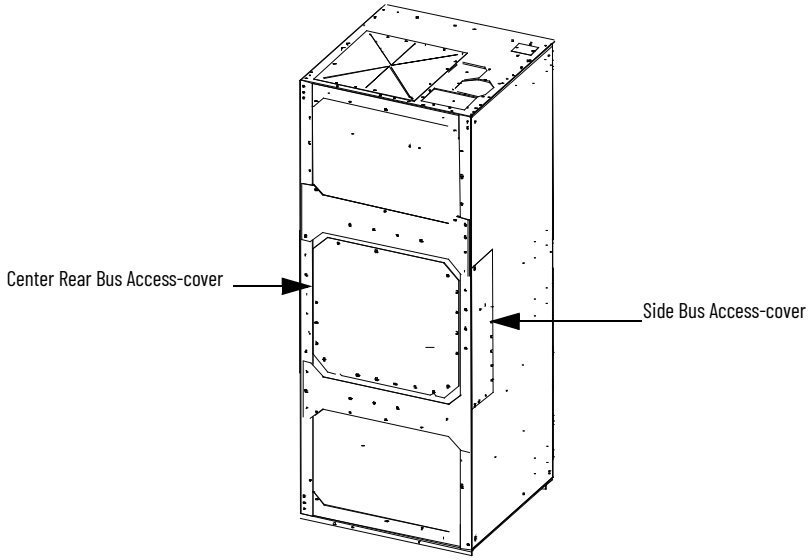

Side Access

A side bus access cover is on each side of the controller, when required.

1. Remove the hardware from the appropriate side bus access cover.
2. Remove the side bus access cover (Figure 22)
3. Ensure ArcShield units at the end of a line-up have a ground connection to the inner plate of the side bus access cover (see Figure 23 and Figure 24). This connection must be maintained to ensure unit arc resistant performance.

Figure 23 - ArcShield Side Bus Access Cover Warning Label

Figure 24 - Side Bus Access-cover Ground Connection (Rear Access-cover removed to show connection point)

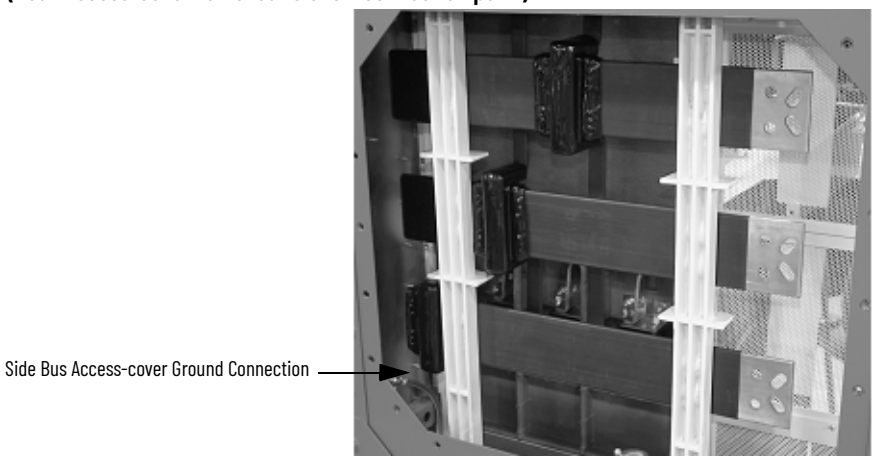

Front Access – Top Entry

1. Complete the Power Lockout Procedure on page 43 for both medium voltage power cell and the power bus.
2. Open low-voltage power cell door. See Opening the Low Voltage Doors on page 21.
3. Remove the two 1/4-20 self-tapping screws from the low voltage panel (see Figure 25).
4. Using a flat head screw driver, turn the 1/4 turn fasteners that hold the low voltage panel, counterclockwise, to swing open the panel (see Figure 25).

Figure 25 - Low Voltage Panel

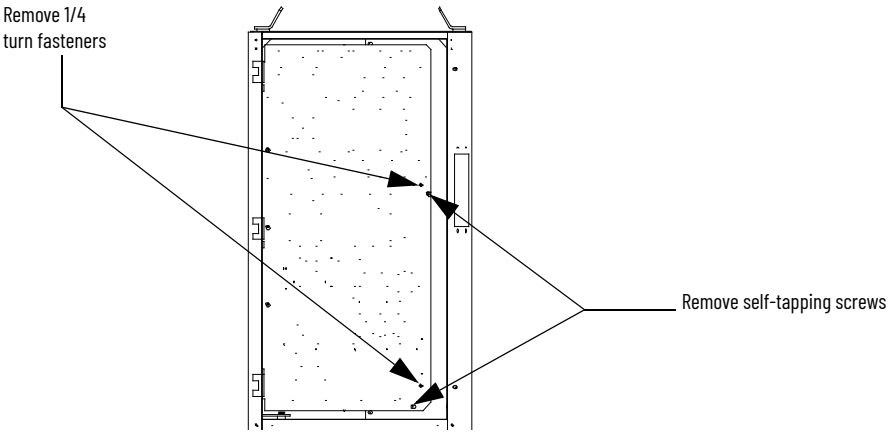

Figure 26 - Access to Power Bus with Low Voltage Panel Rotated

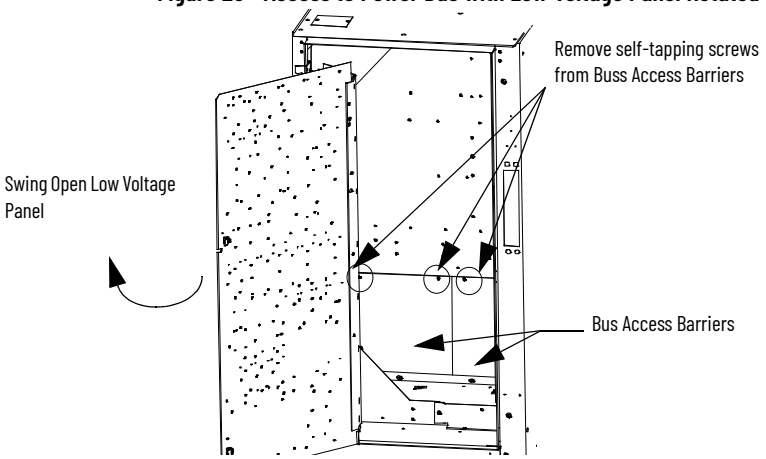

5. Pull on right-hand side of low voltage panel. Swing low voltage panel to the front and left of cabinet (see Figure 26).

The power cell door must be in a fully opened position before rotating the low voltage panel.

6. Locate the two removable bus access barriers.
7. Remove the 1/4-20 (3/8-16 for ArcShield cabinets) retaining screws from removable bus access barriers.

   This step exposes the incoming cable connections to main bus (see Figure 27).

8. Remove the 1/4-20 (3/8-16 for ArcShield cabinets) bolts on the high-voltage door (Figure 27).

Figure 27 - Removal of Access Panel with Low Voltage Panel Rotated

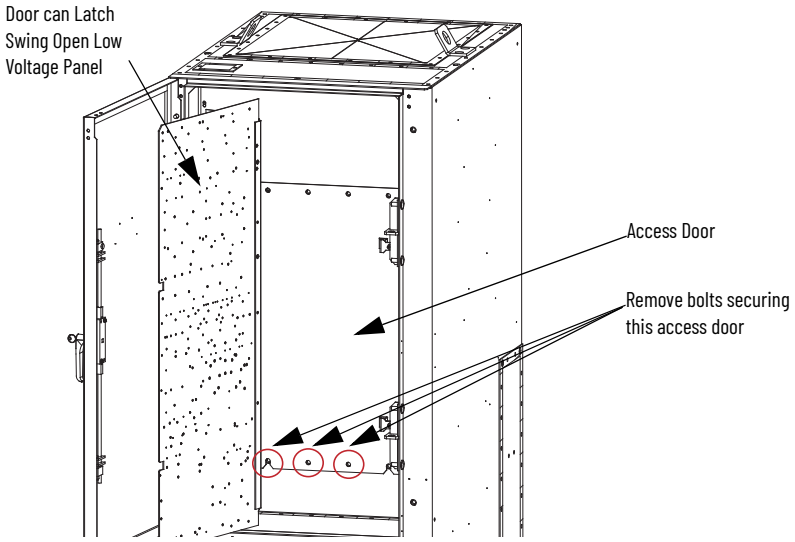

9. Remove the insulating barrier.

Figure 28 - Removal of Low Voltage Barriers to Access Power bus

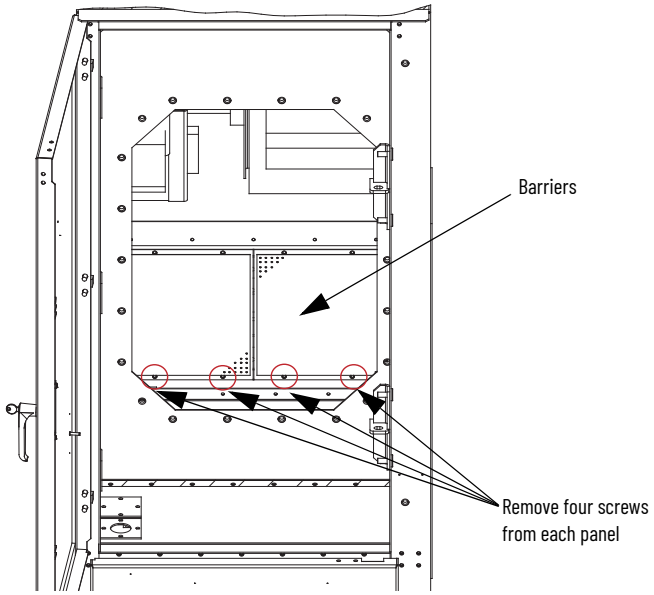

10. When the insulating barrier is removed, you see the power bus bars. (Figure 29)

Figure 29 - Power Bus with Bottom Access Barrier Removed

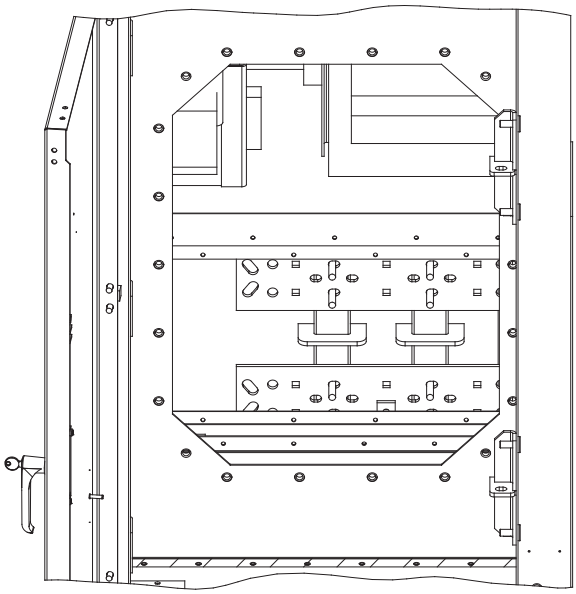

ATTENTION: To avoid shock hazards and stop incoming power, do the Power Lockout Procedure on page 43 before working on the equipment. Verify that all circuits are voltage free by using a hot stick or appropriate device that measures voltage. Failure to do so ca result in severe burns, injury, or death.

IMPORTANT The current transformers can be positioned for top or bottom cable exit. Follow the appropriate procedure that is described for your starter configuration.

IMPORTANT Load cable size must not exceed 1-1000 MCM, 2-750 MCM, 3-500 MCM, or 4-500 MCM per phase.

IMPORTANT See Dimensional Drawings that are provided with order Documentation for additional details that are related to cabinet floor plan.

11. Complete the Power Lockout Procedure on page 43.
12. Remove the appropriate cable conduit-opening plates from the cabinet (see Figure 30 and Figure 31). The plate can be punched or cut to mount conduit.
13. Load cables for the power cell must be routed before control cables. Pull the cables into the cabinet through the appropriate opening (see Figure 30 and Figure 31).
14. Connect the cables to the current transformers and tighten the connections to 45 lb•ft (61 N•m).
15. Connect cable shields (if present) to the ground lug.
16. Install all barriers and reassemble the cabinet.

Figure 30 - Load Cable Conduit Openings, Arc Resistant Cabinet (Top Exit cable configuration is shown with plenum)

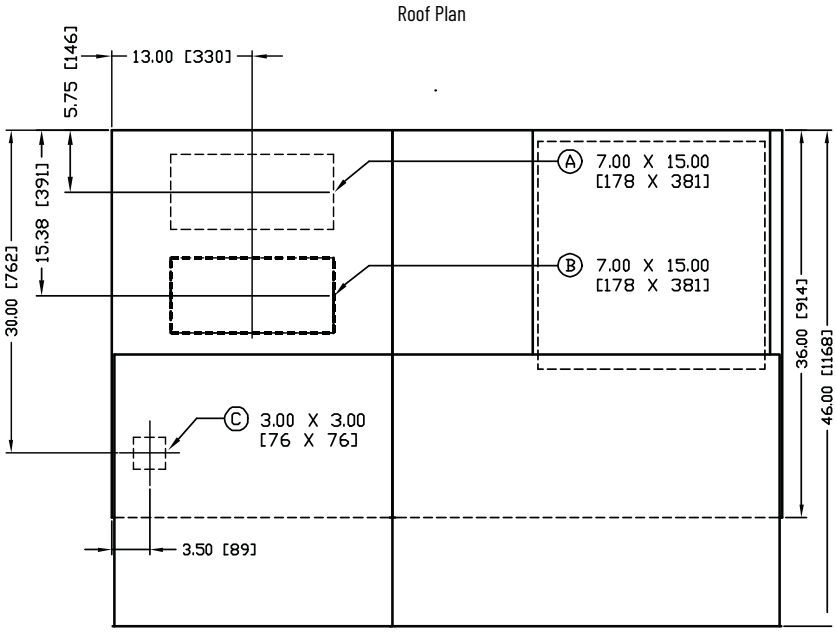

Figure 31 - Load Cable Conduit Openings, Arc Resistant Cabinet (Bottom Exit Cable Configuration shown)

Ⓐ Line Cable Conduit Opening.

Ⓑ Load Cable Conduit Opening.

Ⓒ Control Wire Conduit Opening.

Ⓓ Plenum is removed and shipped separately. Customer must install.

Ⓔ Do the Mounting Holes for M12 (1/2 in.) Diameter Anchor bolt.

Ⓕ Removable Lifting Angles.

Ⓖ 1.00 [25] x 30 [76] Non-removable Sill Channels.

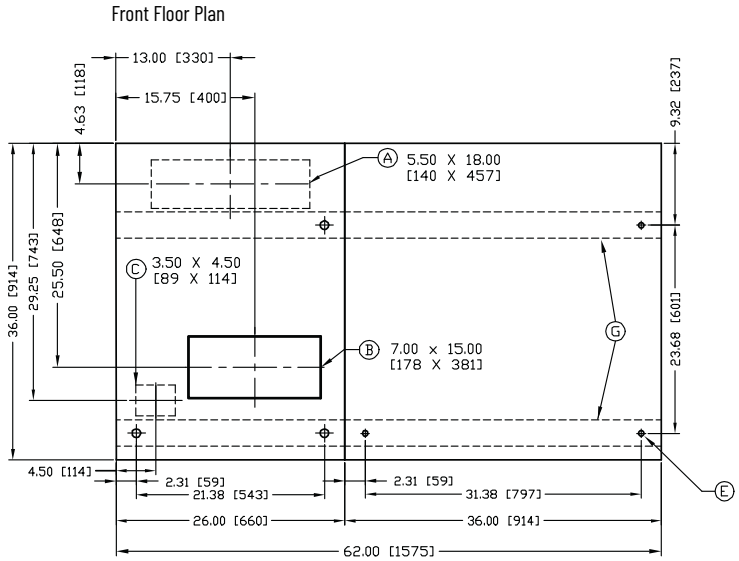

ATTENTION: Make sure that all barriers are installed before re-energizing the equipment. Failure to do so can result in electrical faults, damage to equipment, or serious injury to personnel.

Notes:

Common Installation

Bus Splicing

Power Bus

ATTENTION: This procedure requires contact with medium voltage components. To avoid shock hazards and stop incoming power, do the Power Lockout Procedure on page 43 before working on the equipment. Verify that all circuits are voltage free by using a hot stick or appropriate device that measures voltage. Failure to do so ca result in severe burns, injury, or death.

1. The power and ground bus splice kit is mounted on the front of the shipping skid.

IMPORTANT Verify that the structure series numbers on the splice kit package match the structure series number that is found on the cabinet nameplate. See Starter Identification on page 9 for details regarding the nameplate.

2. See Access to the Power Bus on page 14 for standard enclosure and Access Power Bus on page 25 for ArcShield™ enclosure.
3. For a **1200 A** power bus, assemble the splice bars as shown in Figure 32 on page 34. Tighten the nuts to 45 lb•ft (61 N•m).

   For a **2000 A** power bus, assemble the splice bars as shown in Figure 33 on page 34. Tighten the nuts to 45 lb•ft (61 N•m).

   For a **3000 A** power bus, assemble the splice bars as shown in Figure 34 on page 34. Tighten the nuts to 45 lb•ft (61 N•m)

IMPORTANT Attach the bus links to the cabinet on the left side first - as viewed from the front of the unit.

IMPORTANT Place bus clamps on the rear side of each main horizontal bus or splice bar, as viewed from the front of the unit, see Figure 32, Figure 33, or Figure 34.

Figure 32 - Typical 1200 A Power Bus Splicing Configuration (Viewed from Front of Cabinet)

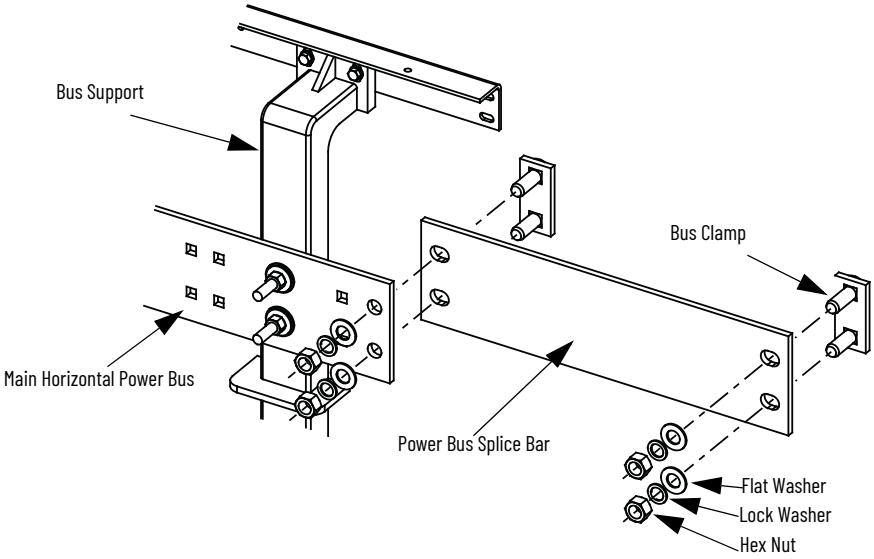

Figure 33 - Typical 2000 A Power Bus Splicing Configuration (Viewed from Front of Cabinet)

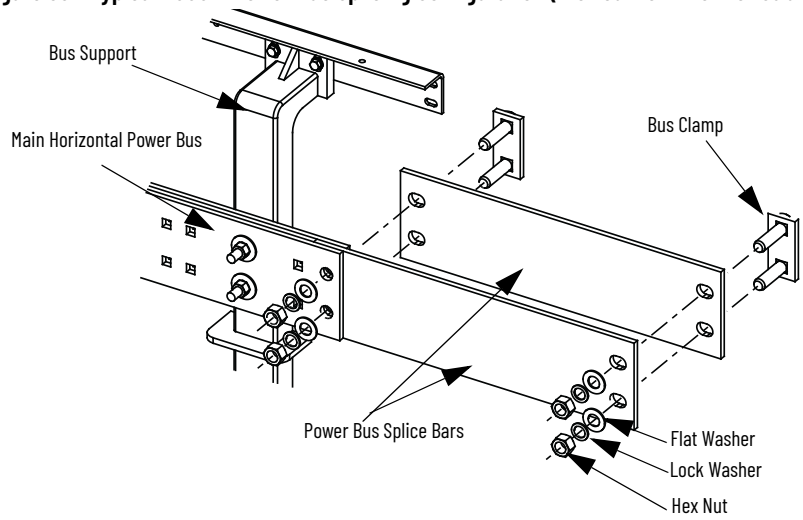

Figure 34 - Typical 3000 A Power Bus Splicing Configuration (Viewed from Front of Cabinet)

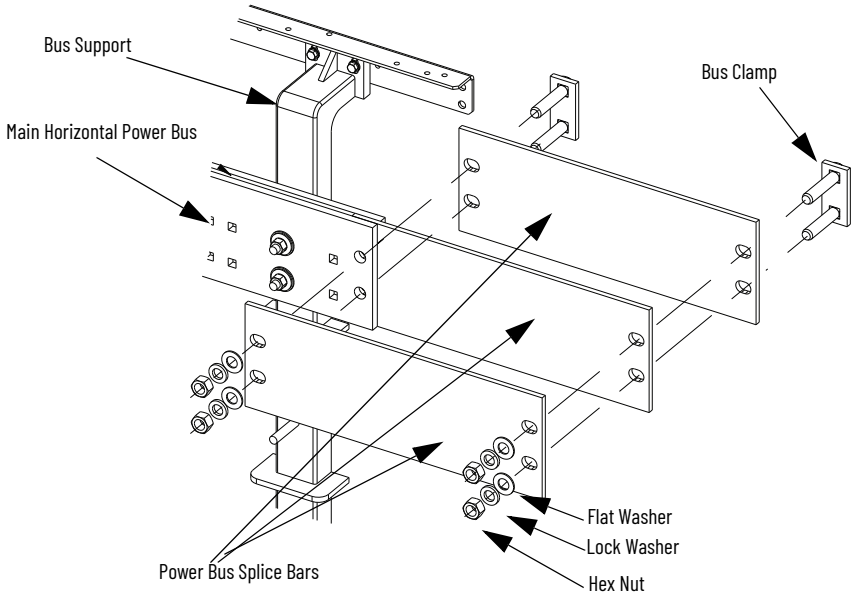

ATTENTION: Install all barriers before energizing the equipment. Failure to do so can result in electrical faults, damage to equipment, or severe injury to personnel.

Insulated Power Bus Splicing

If the starter is equipped with insulated power bus, a splice kit with insulated links, insulating boots, and tape is provided. See the kit for installation instructions.

Ground Bus

1. See Figure 35 to determine the correct ground splice configuration and assemble as shown.
2. Torque the hardware to 15 N•m ± 1 N•m (12 lb•ft ± 1 lb•ft).
3. Check all hardware for correct tightness and install all covers and plates.

Figure 35 - Typical Ground Bus Splicing Configuration (Front View)

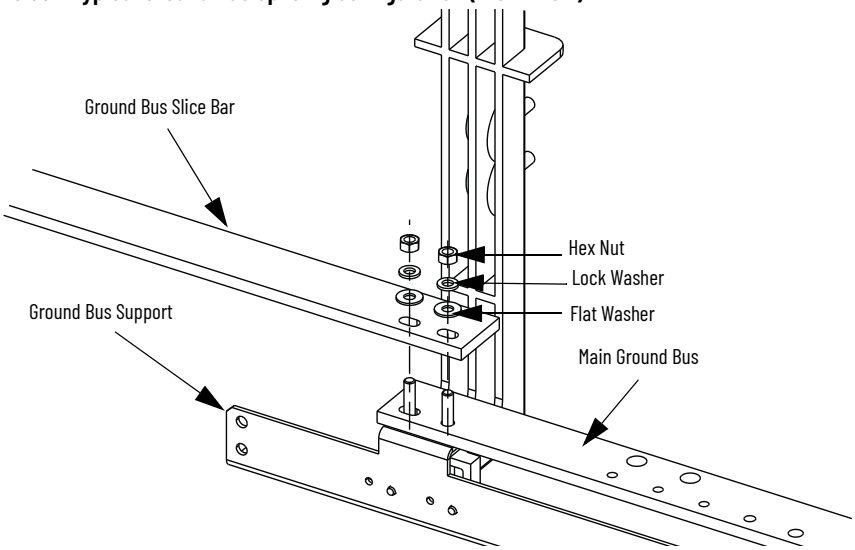

ATTENTION: Install all barriers before re-energizing the equipment. Failure to do so can result in electrical faults, damage to equipment, or severe injury to personnel.

Incoming Line Cable Connections

ATTENTION: This procedure requires contact with medium voltage components. To avoid shock hazards and stop incoming power, do the Power Lockout Procedure on page 43 before working on the equipment. Verify that all circuits are voltage free by using a hot stick or appropriate device that measures voltage. Failure to do so ca result in severe burns, injury, or death.

The incoming cables are connected to the power bus in the last section on the leftmost cabinet in a lineup.

IMPORTANT **For Non-ArcShield units,** incoming line cable size must not exceed 1-750 MCM or 2-500 MCM per phase.
For ArcShield units, incoming line cable size must not exceed 1-500 MCM or 2-4/0 per phase.

For larger cables, an incoming line module must be used for either cabinet styles.

- To access the power bus, remove the center-back plate or side plate. If access to the rear of the unit is not possible, refer to:
  Access to the Power Bus on page 14 for Standard Enclosure or
  Access Power Bus on page 25 for ArcShield Enclosure.

4. Connect the incoming power lines to the power bus (Figure 36).
5. Torque to recommended values, see page 9.

Figure 36 - Incoming Line Cable Connections, Typical Top Entry Configuration

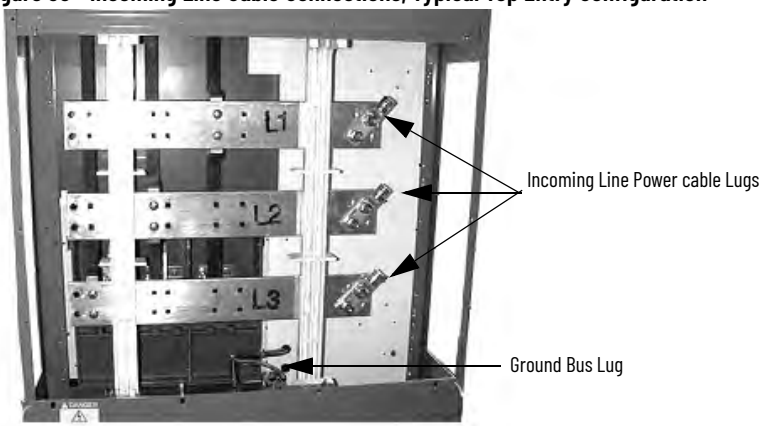

IMPORTANT If the line cables require installation by front access, complete the incoming line connection before installing the load cables.

6. Connect the ground wire to the ground bus lug.
7. Connect any external control wires to the control panel terminal blocks in the low voltage compartment. See the wiring diagrams that are received with your order.

Hi-Pot and Insulation Resistance Test

Insulation integrity must be tested before medium voltage electrical equipment is energized. Use a high-voltage AC insulation tester or an insulation resistance tester (5000V type is recommended).

ATTENTION: Exercise caution when performing high-voltage tests on the equipment. Failure to do so can result in electric shock, severe burns, injury, or death.

ATTENTION: Disconnect power factor correction capacitors (if so equipped) before performing the Hi-Pot test. Failure to do so can result in personal injury or damage to the equipment. See Power Lockout Procedure on page 43 for information on how to dissipate any stored power in the capacitors.

ATTENTION: Remove all primary fuses for the control power transformer and/or the potential transformer. Failure to do so can damage the equipment during the Hi-pot test.

Insulation can be tested from phase to phase and from phase to ground. The recommended level for an AC Hi-Pot test is (2 X V_{LL}) volts, where V_{LL} is the rated line-to-line voltage of the power system. The leakage current must be less than 20 mA. Record the result for future comparison testing.

If an insulation tester is used, it can indicate 50,000 megohms or greater if the unit is isolated from the line and the motor. If the unit is connected to a motor, the insulation tester can indicate 5000 megohms or greater (phase to ground).

Start-up Procedure

Vacuum Contactor Inspection

See publication 1502-UM054 for information on pre-energization inspection, vacuum bottle integrity test, and insulation resistance test.

Preliminary Checks

Verify the following:

- Contactor current and voltage ratings are correct for the attached load.
- Control voltage is correct.
- Settings for protective relays.
- Heater elements (if provided) in overload relay are secure and undamaged.
- Equipment grounding
- External power and control connections match electrical diagrams.
- All hardware is installed and torqued to recommended values, see page 9.
- All barriers are installed to correct positions.
- All fuses are correct class, type and rating.
- Mechanical interlocks and isolation switch function properly.
- Make sure that any microprocessor-based protection relay is programmed.
- Interior of cabinet is free from dirt, loose bolts, tools, or metal chips. Vacuum clean if necessary.
- All tools are accounted for. If you cannot locate a tool, do not energize the unit until it is found.

Testing the Contactor Operation

1. Connect the appropriate external power supply (120V or 230V AC) to the test receptacle in the control panel. Turn the selector switch to the TEST position.

ATTENTION: Some control circuit configurations can require control jumpers to let the contactor close during the test procedure. Do not jumper any isolation switch contacts such as ISa or ISb (Figure 53 on page 54, for the location of these contacts). The use of jumpers for these contacts can result in equipment damage or injury to personnel.

2. Electrically operate the contactor several times. Inspect the armature plate and verify that it fully contacts the magnetic cores.
3. Turn the selector switch to the OFF position and unplug the test voltage.
4. Remove any metal filings or loose hardware from around the magnetic cores of the vacuum contactor. Debris is attracted to the coil when it is energized and could prevent the contactor from closing properly.

Figure 37 - Typical Wiring Diagram: Electrically Held Vacuum Contactor (*with* IntelliVAC™ Control)

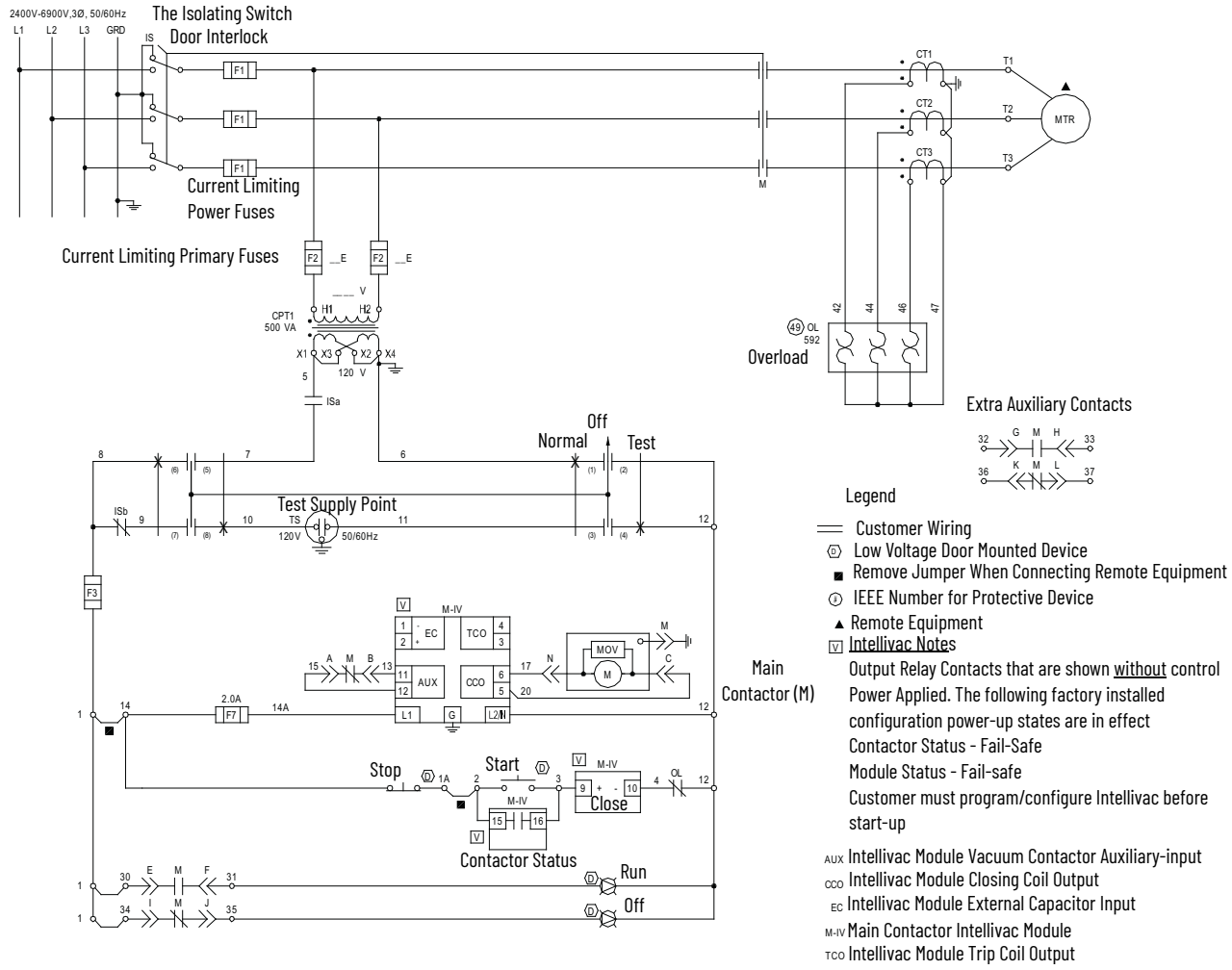

Figure 38 - Typical Wiring Diagram: Electrically Held Vacuum Contactor (*with* Relay Control)

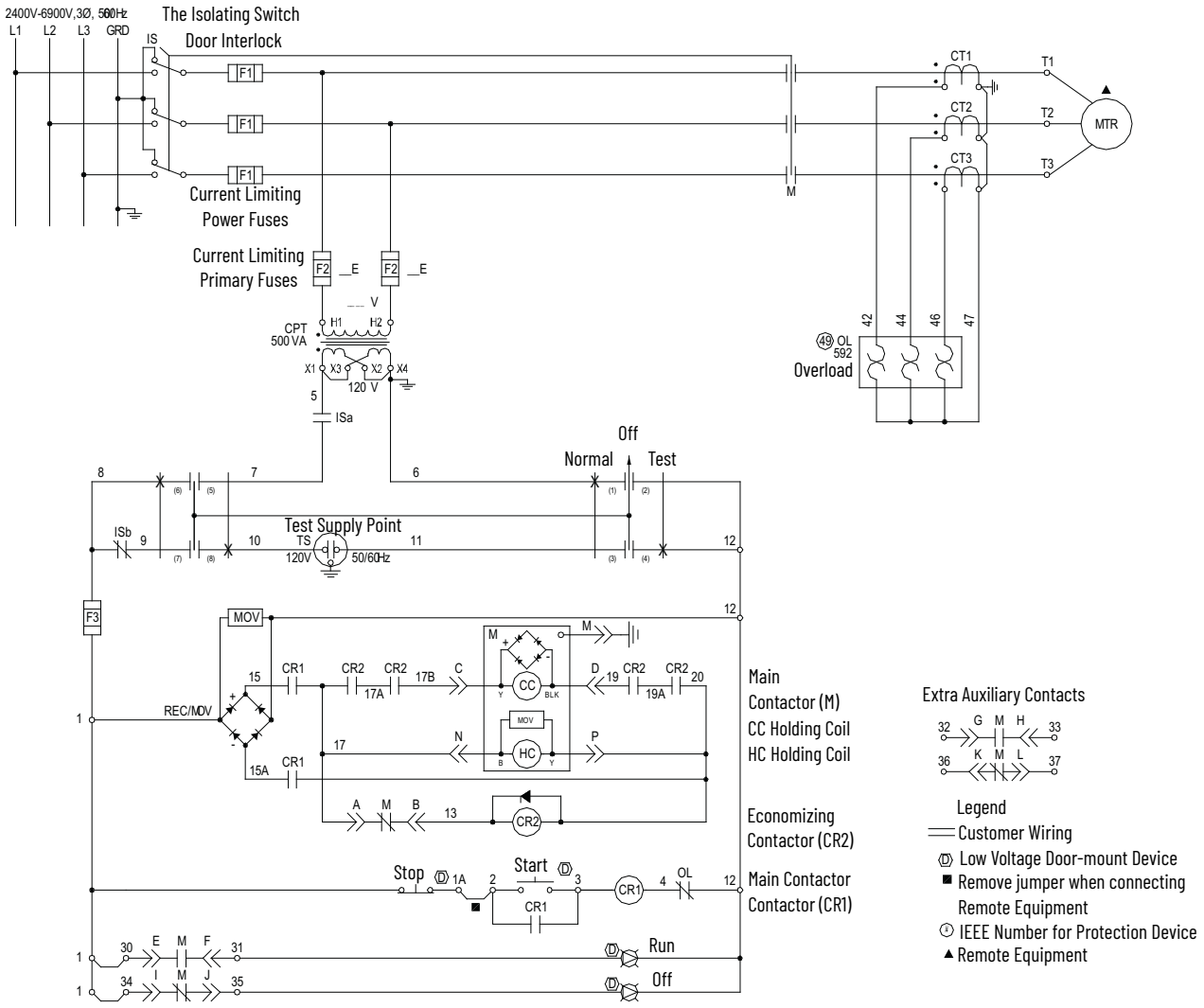

Maintenance

ATTENTION: Use suitable personal protective equipment (PPE) per local codes or regulations. Failure to do so can result in severe burns, injury, or death.

IMPORTANT Establish a maintenance and inspection schedule for the equipment. Service annually, or every 20,000 operations (whichever comes sooner) is the minimum recommended. Extreme operating conditions can warrant additional attention.

Tool Requirements

IMPORTANT Some components of this product incorporate Imperial hardware. Rockwell Automation® recommends the use of the appropriate tools to complete the maintenance procedures on these components. If you cannot obtain such tools, contact the Rockwell Automation sales office in your area for assistance.

If you cannot obtain the required tools, contact the Rockwell Automation sales office in your area for assistance.

Tool	Specification
Torque wrench	0...48 lb•ft (0...65 N•m)
Sockets	3/8 in. 7/16 in. 9/16 in. 3/4 in. 7/8 in.
Racket	Handle and extension
Wrenches	7/16 in. 1/2 in. 9/16 in. 3/4 in. 7/8 in.
Feeler gauges	1.3 mm (0.050 in.) 2 mm (0.080 in.) 0.5 mm (0.020 in.)
Flat-blade screwdriver	

IMPORTANT When installing the components, or when assembling the cabinet make sure that all bolts are installed using the Recommended Torque Values on page 9.

Door Interlock Circumvention

ATTENTION: The door interlock mechanism is designed to prevent access to the medium voltage cell while the unit is energized. When the unit is in operation, do not circumvent this interlocking safety feature. Always disconnect incoming power. Do the Power Lockout Procedure on page 43 before proceeding with any adjustments that require the handle to be moved to the ON (closed) position. Failure to do so can result in electric shock with severe burns, injury, or death.

Some of the following sections can require moving the isolation switch handle to the ON position while the medium voltage door is open. The interlocking safeguards in the mechanism are designed to stop the handle from moving to the ON position while the cabinet door is open.

To circumvent this safety feature:

1. To depress the door interlock lever in a downward movement, use a screwdriver, or other tool
2. Hold the lever down while moving the handle to the ON (closed) position.

Figure 39 - Door Interlock Lever

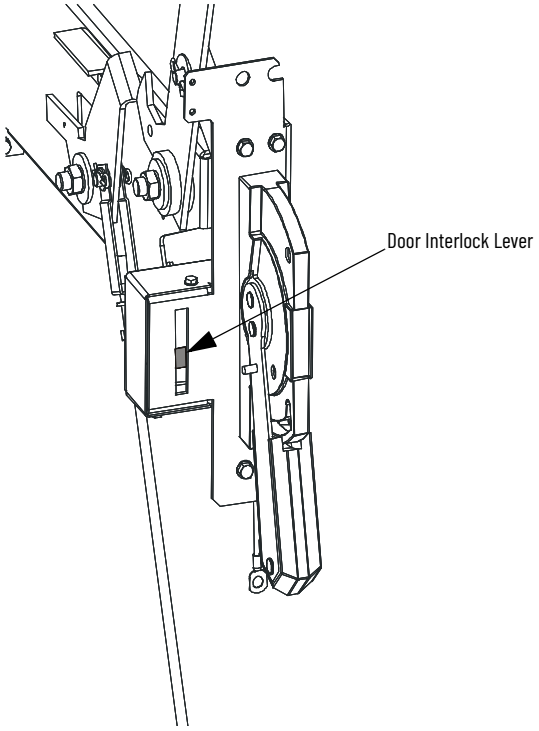

Power Lockout Procedure

ATTENTION: Use suitable personal protective equipment (PPE) per local codes or regulations. Failure to do so can result in severe burns, injury, or death.

ATTENTION: Always do the Power Lockout Procedure before servicing the equipment. Failure to do so can result in severe burns, injury, or death.

ATTENTION: The following procedure requires you to move the isolation switch handle to the ON position. To avoid shock hazards, disconnect incoming power. Do the Power Lockout Procedure on page 43 before servicing of the equipment.

ATTENTION: Failure to do the Power Lockout Procedure results in a live power cell when the isolation switch handle is in the ON position. A live power cell can cause severe burns, injury, or death. Rockwell Automation does not assume any responsibility for injuries to personnel who have not completed the Power Lockout Procedure before servicing the equipment.

1. Disconnect and do a lockout of all feeder power supplies to the starter.
2. Move the isolation switch handle to the OFF position.
3. If the unit is equipped with power factor correction capacitors, the stored energy must be dissipated before entering the power cell. Wait at least 5 minutes before entering the power cell or dissipate the power with this procedure:
   a. Verify that the isolation switch handle is in the OFF position.
   b. Open the low voltage door.
   c. Connect the appropriate power supply (120V or 230V) into the auxiliary control power circuit as shown on the electrical drawing.
   d. Move the control switch to the TEST position.

Figure 40 - Control Panel (IntelliVAC™ Control)

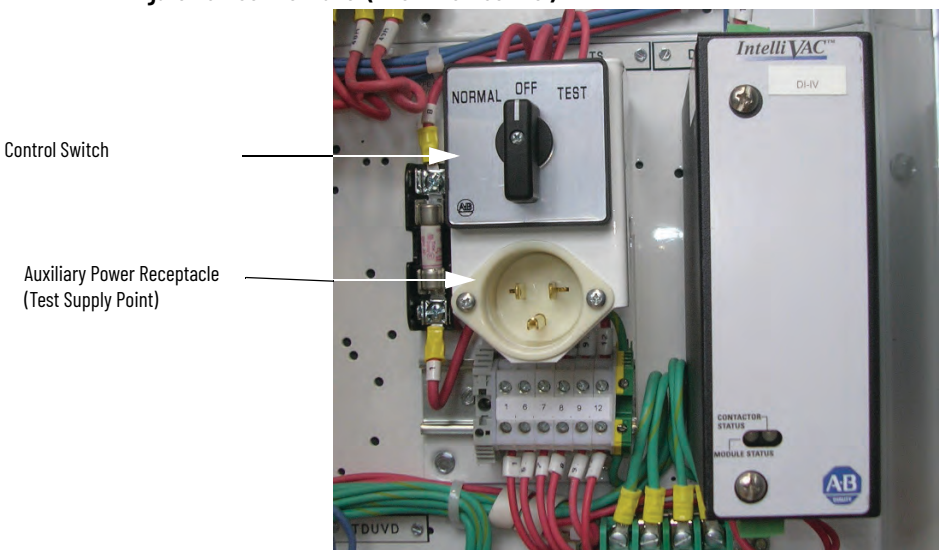

   e. Push the START button on the unit or at a remote location.
      Both operate the contactor electrically.
   f. Disengage the contactor and move the control switch to the OFF position. Disconnect the external power supply.
   g. Complete Power Lockout Procedure on page 43

4. Open the medium voltage door.
5. Visually inspect that the isolation switch blades fully engage the grounding pins on the grounding bar. The isolation switch shutters must be closed (see Figure 41).

Figure 41 - Inspecting the Isolation Switch in Open Position

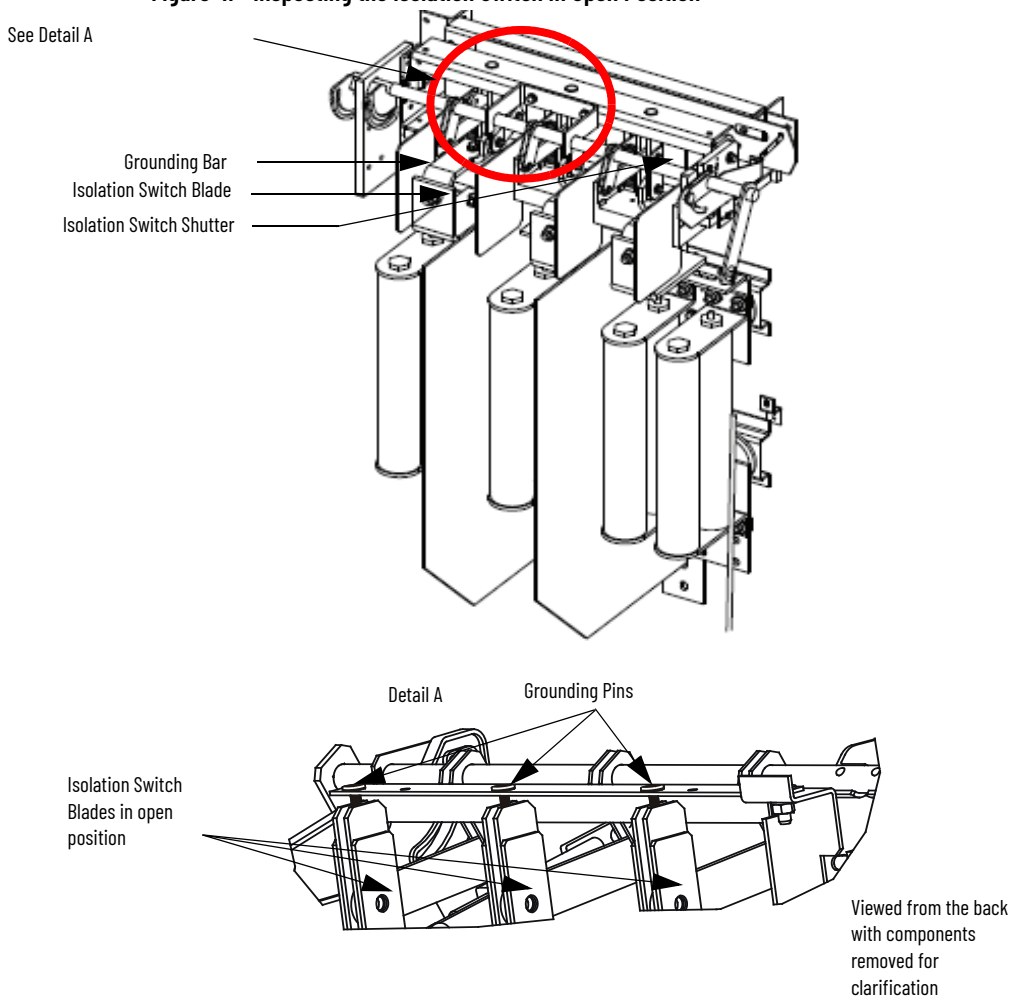

6. Check the line and load sides of the contactor with a hot stick or appropriate device for voltage measurement of the system. Verify that they are voltage free (see Figure 42).
7. Check for line-side voltage at the top vacuum bottle terminals.
8. Check for load-side voltage at the bottom vacuum bottle terminals.

Figure 42 - Contactor Voltage Checkpoints

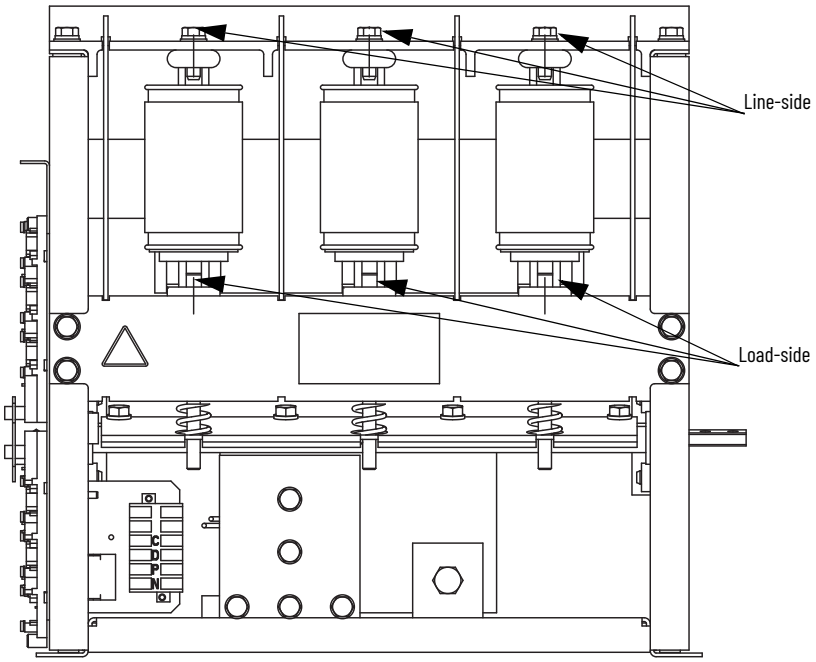

9. Refer to Door Interlock Circumvention on page 42 to move the isolation switch handle to the ON position.
10. Check the isolation switch blades with a hot stick or appropriate device for voltage measurement of the system. Verify that they are voltage free (see Figure 43).

Figure 43 - Isolation Switch Voltage

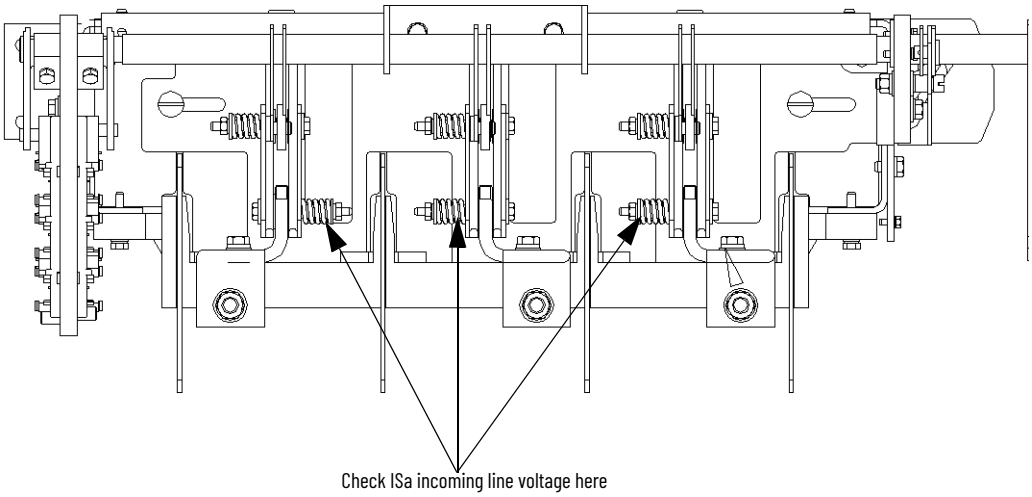

11. When all power circuits are verified to be voltage free, move the isolation switch handle back to the OFF position. The unit is now safe to service.

Fuse Removal and Replacement

ATTENTION: Only personnel who are trained and understand the Bulletin 1500 product line are to work on this equipment. Always use suitable safety equipment and procedures.

Bolt-on Fuses

Figure 44 - Bolt-on Fuses

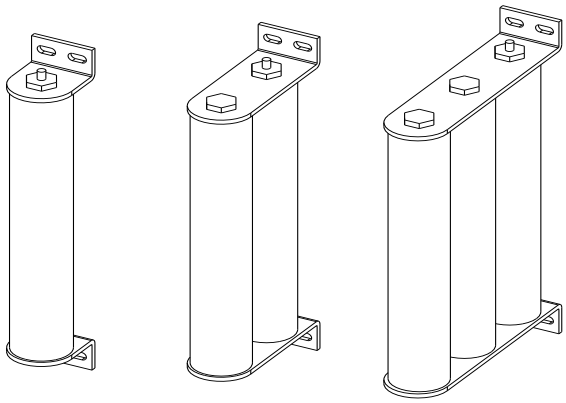

ATTENTION: Servicing energized industrial control equipment can be hazardous. Severe injury or death can result from electrical shock, burn, or unintended actuation of control equipment. Hazardous voltages can exist in the cabinet even with the circuit breaker in the off position. Recommended practice is to disconnect or Lockout control equipment from power sources, and confirm discharge of stored energy in capacitors. If it is necessary to work in the vicinity of energized equipment, the safety-related work practices of NFPA 70E, Electrical Safety requirements for Employee Work places, must be followed.

ATTENTION: To avoid electrical shock, make sure that the main power is disconnected and equipment is tagged and locked out. Verify that all circuits are voltage free using a hot stick or appropriate voltage-measuring device. Failure to do so can result in injury or death.

IMPORTANT The main power fuse has a pop-up indicator pin that is at one end of the fuse. When a fuse has opened, the indicator is in its extended position. The fuse must be oriented in the fuse clip assembly so that the indicator is at the top.

ATTENTION: The fuses can be hot for up to one hour after operating. Verify the temperature before handling and use insulated hand protection if needed. Failure to do so can result in burns.

Bolt-on Fuse Removal and Installation

Tools required:

- 3/8 in. drive ratchet
- 2 in. extension
- 6 in. extension
- 12 in. extension
- 1/2 in. socket
- 3/8 in. drive torque wrench

IMPORTANT The fuse configuration determines what length of extension is required to get at the mounting hardware. The fuse configuration also determines what size of interphase barriers are installed. The lower barriers can be removed to provide better access to the fuse mounting nuts.

1. Remove the two lower mounting nuts, lock washers sand flat washers from the mounting studs.
2. Remove the upper two mounting nuts, lock washers and flat washers from the mounting studs and remove the fuse from the fuse mounting studs.
3. Install the replacement fuse on the four mounting studs, hold the fuse in place, and install the upper two flat washers, lock washers and nuts. Torque nuts to 12 lb•ft (20 N•m).
4. Install the lower two flat washers, lock washers and nuts. Torque the nuts to 12 lb•ft (20 N•m).
5. If, interphase barriers were removed, make sure that they are properly reinstalled.

Contactor Maintenance

See Medium Voltage Contactor 800 A, 2400...7200V (Series F) User Manual, publication 1502-UM054 for contactor maintenance instructions.

Removing the Contactor

ATTENTION: To avoid shock hazards and stop incoming power, do the Power Lockout Procedure on page 43 before servicing of the equipment. Verify that all circuits are voltage free by using a hot stick or appropriate device that measures voltage. Failure to do so can result in severe burns, injury, or death.

1. Complete the Power Lockout Procedure on page 43.
2. Disconnect the control wiring-harness from the wire plug at the lower left side of the contactor (see Figure 44).
3. Use a 9/16 in. socket wrench to disconnect the power cables from the rear of the contactor.
4. Remove the nylon contactor bushing 1/4-20 retaining-screw (12 lb•ft [15 N•m]) from the contactor interlock lever. Slide the contactor interlock rod and the nylon contactor bushing out of the groove in the contactor interlock lever (see Figure 45).

Figure 45 - Removing the Contactor (Front View)

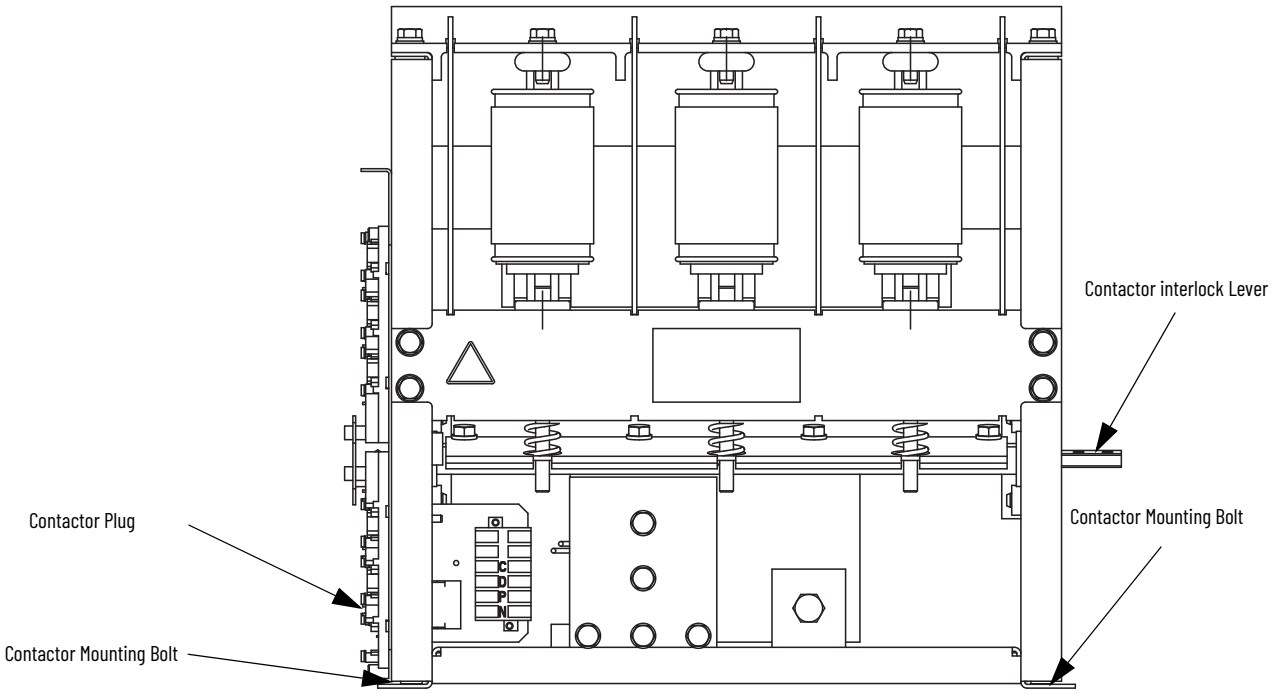

Figure 46 - Removing the Contactor (Right-side view)

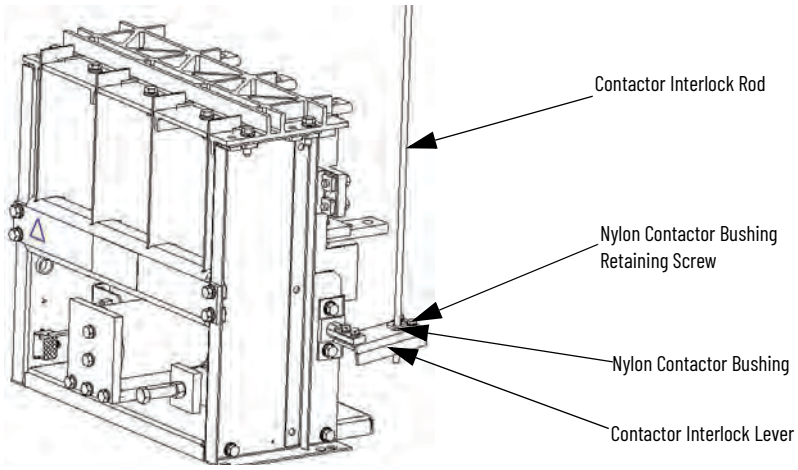

5. Remove the two 5/16-18 contactor mounting bolts (11 lb•ft [14.5 N•m]) at the front of the contactor.
6. Carefully remove the contactor from the cabinet.

ATTENTION: The contactor weighs approximately 45 kg (100 lb) and assistance can be required to remove it safely from the cabinet and transport it. Failure to use caution when moving the contactor can result in equipment damage and/or personal injury.

7. If the contactor is being replaced with a new one, move the contactor interlock lever to the new contactor.

ATTENTION: The retaining screw is critical to the mechanical integrity of the isolation switch. It is important to make sure that this screw is installed during reassembly.

8. To reinstall the contactor, reverse the procedure. Make sure the mounting bolts (11 lb•ft [14.5 N•m]), power cable hardware (45 lb•ft [61 N•m]), and bus bar hardware (45 lb•ft [61 N•m]) is properly torqued.
9. Adjust the contactor interlock rod according to the Contactor Interlock Rod Adjustment on page 49.

Contactor Interlock Rod Adjustment

ATTENTION: To avoid shock hazards and stop incoming power, do the Power Lockout Procedure on page 43 before working on the equipment. Verify that all circuits are voltage free by using a hot stick or appropriate device that measures voltage. Failure to do so can result in severe burns, injury, or death.

1. Complete the Power Lockout Procedure on page 43.
2. Open the medium voltage door. Use the Door Interlock Circumvention on page 42 to move the isolation switch handle halfway between the OFF and ON position (see Figure 47). Keep the handle in this position until the adjustment procedure is completed.
3. With the contactor in the OFF position, insert a 1.5 mm (0.060 in.) feeler gauge in the gap between the interlock lever and the isolation switch operating lever. The gap must be between 1.0…2.0 mm (0.039…0.078 in.).
4. To reduce the gap distance, follow steps 5…7.
   To increase the gap distance follow steps 8…10.

Figure 47 - Isolation Switch Handle Adjustments

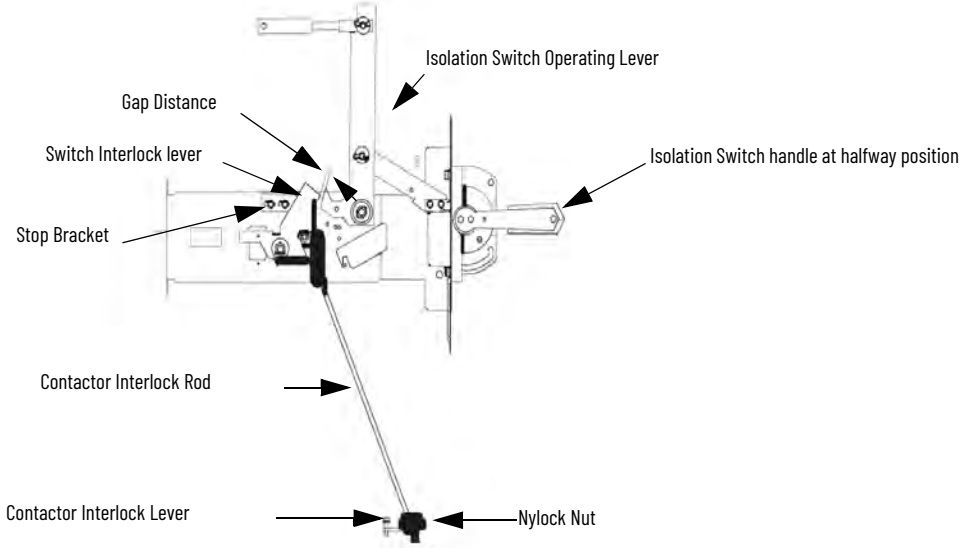

Reduce the Gap Distance

5. Loosen the two screws in the stop bracket and move up the stop bracket against the interlock lever.
6. With the feeler gauge positioned in the gap, move the interlock lever and the stop bracket closer to the isolation switch operating lever to reduce the gap space. Tighten the 1/4-20 in. stop bracket screws (12 lb•ft [15 N•m]).
7. Tighten the nylock nut until it is snug against the contactor interlock lever. Do not overtighten the nylock nut as it moves the interlock lever and reduce the gap. Proceed to Step 11.

Increase the Gap Distance

8. Loosen the two screws in the stop bracket and move the stop bracket away from the interlock lever.
9. Loosen the nylock nut until the gap reaches the necessary size.
10. Move the stop bracket until it just touches the interlock lever and tighten the screws.
11. Apply Loctite 290 (or equivalent adhesive) to the 1/4-20 in. stop bracket screws and torque the screws to 12 lb•ft (15 N•m).
12. Move the isolation switch handle to the ON position.
13. Manually close the contactor by attaching locking pliers to the contactor interlock lever and pushing down until the armature plate contacts the magnetic cores (see Figure 48). Verify that the interlock lever overlaps the isolation switch operating lever by at least 3 mm (0.125 in.). See Figure 49.

Figure 48 - Closing the Contactor Manually (Front View -some parts not shown)

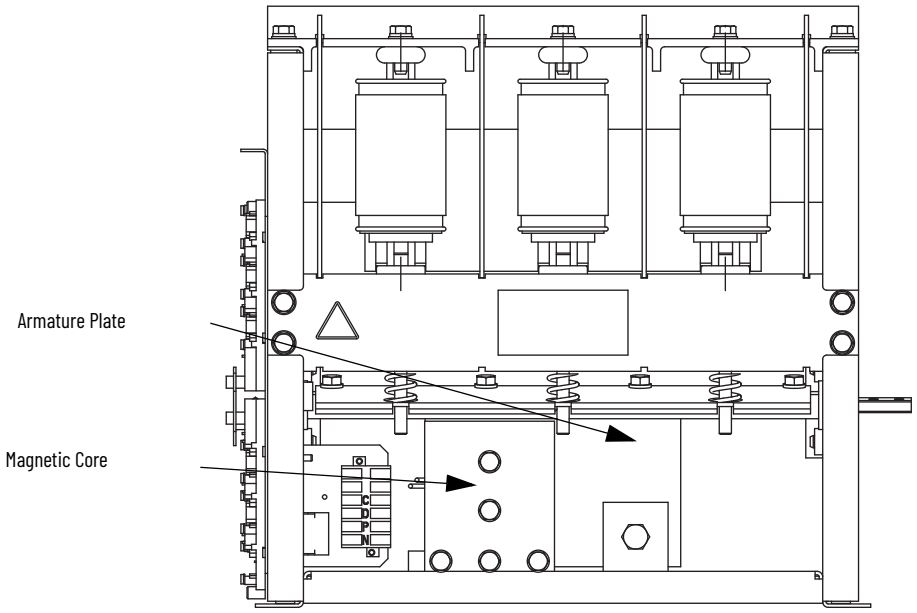

Figure 49 - Isolation Switch Operating Lever Overlap

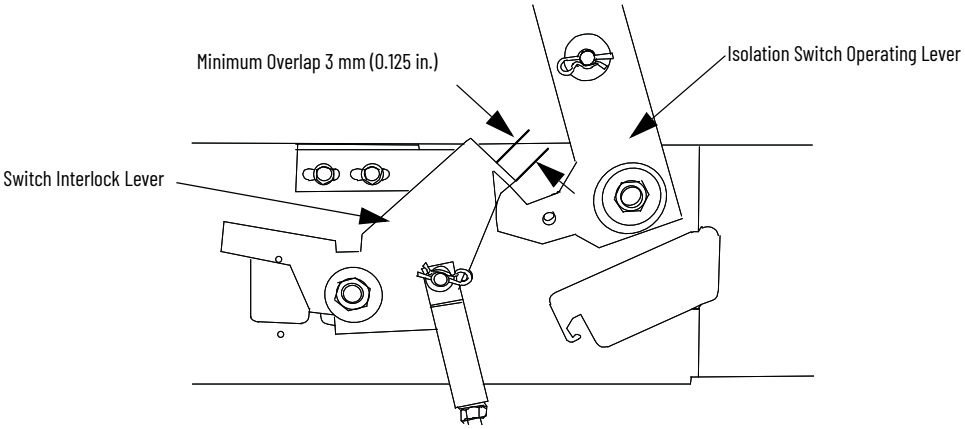

14. Open the contactor. Verify that the interlock lever and the rod move freely and that the return springs move the assembly back to the starting position.

Isolation Switch Mechanism Inspection and Maintenance

ATTENTION: To avoid shock hazards and stop incoming power, do the Power Lockout Procedure on page 43 before working on the equipment. Verify that all circuits are voltage free by using a hot stick or appropriate device that measures voltage. Failure to do so can result in severe burns, injury, or death.

1. Open the medium voltage door.
2. Inspect the condition of the clevis pin and cotter pins that are shown in Figure 49. Replace any worn parts.
3. If the isolation switch operating lever or the interlock lever require replacement, apply lubricant to the pivot points before installing the new components (see Figure 50). Use Dow Corning 55 O-ring lubricant (Rockwell Automation part no. RU-8216, or equivalent)

Figure 50 - Isolation Switch Handle Mechanism Lubrication Points

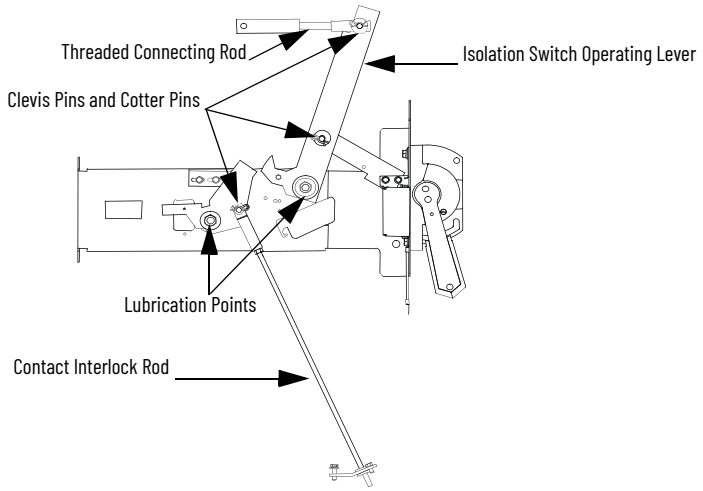

4. Inspect the mounting hardware on the isolation switch operating lever and contactor interlock rod (see Figure 50). Tighten any loose hardware.
5. Inspect the isolation switch blades and the incoming line stabs. The mating surfaces must be clean and well-lubricated.
6. If an infrared window is available, complete the following steps (during normal equipment run mode):
   a. Using a thermal camera, measure the temperature of the isolation switch at least every 6 months.
   a. Monitor every reading and record temperature variations.

   Temperatures above 100 °C (212 °F) is cause for concern. See Recommended Corrective Action on page 52.

7. If an infrared window is not available, complete the following steps:
   a. Perform a visual inspection of the isolation switch.

   Look for dried, dark-colored, hardened grease or pitting on the incoming line stabs.

   A healthy isolation switch has a thin layer of clear lubricant.

   ATTENTION: Do not add grease. Do not remove existing grease and apply a different lubricant.

   b. Using a micro-ohmmeter, take resistance measurements as close as possible to the isolation switch and load connections (from the main power bus to the top of the power fuses).

   Measurements greater than 150 µΩ will prompt hardware changes. See Recommended Corrective Action on page 52.

Recommended Corrective Action

1. Replace all three movable blades.
   - 400/600 A isolation switch: torque to 11 ft•lb (14.9 N•m)
   - 800 A isolation switch: torque to 19 ft•lb (25.8 N•m)
2. If there is hardened, dark colored grease or pitting on the isolation switch terminals, replace the incoming line stabs.

   Pitting can indicate incorrect adjustment of the isolation switch auxiliary switches.

Contact technical support for assistance.

Isolation Switch Mechanism Grounding Adjustment

ATTENTION: To avoid shock hazards and stop incoming power, do the Power Lockout Procedure on page 43 before working on the equipment. Verify that all circuits are voltage free with a hot stick or appropriate device that measures voltage. Failure to do so can result in severe burns, injury, or death.

1. Inspect the grounding of the isolation switch blades. When the isolation switch handle is in the OFF position, the isolation switch blades must fully engage the grounding pins. The blades must also be within 1.5 mm (0.06 in.) of the ground bar (see Figure 41). When the isolation switch handle is in the ON position, the blades must fully engage the incoming line stabs.

Figure 51 - Isolation Switch Grounding Adjustment

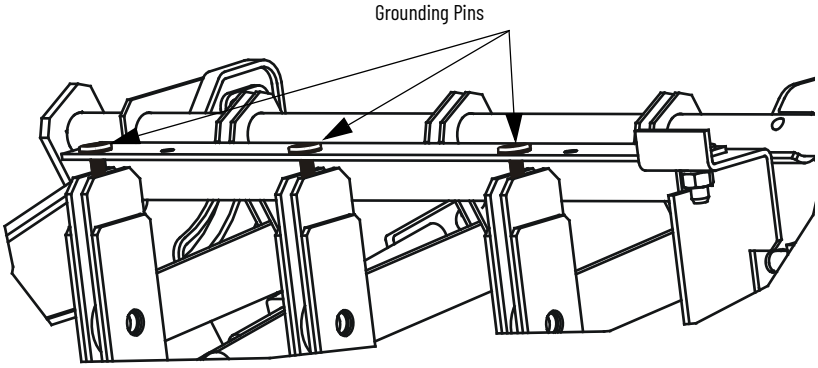

2. To adjust the distance from the blades to the bar, disconnect the threaded connecting rod at the handle operating lever, see Figure 50).
3. To adjust the position of the isolation switch blades in the ON and OFF position. Turn the threaded connecting rod to lengthen or shorten it.

Auxiliary Contacts Inspection and Replacement

ATTENTION: To avoid shock hazards and stop incoming power, do the Power Lockout Procedure on page 43 before working on the equipment. Verify that all circuits are voltage free with a hot stick or appropriate device that measures voltage. Failure to do so can result in severe burns, injury, or death.

1. Inspect the auxiliary contacts for wear, scorching, or heat damage.
2. Replace any damaged contacts. The contacts have a mean time between failure (MTBF) rating of 20 million operations, when used within the operating specifications.
3. To remove the contact, turn both of the D-head fasteners until the flat sections are aligned with the edge of the contact (see Figure 52).
4. Remove the contact from the housing.
5. Disconnect the wires from the auxiliary contact.
6. To reinstall the auxiliary contact, reverse the procedure.
7. Make sure that the contact is correctly positioned into the contact carrier (see Figure 52).

Figure 52 - Auxiliary Contact Orientation

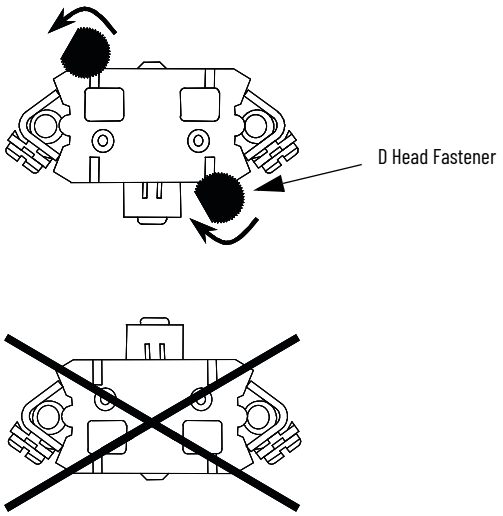

The auxiliary contacts are mounted on the left side of the isolation switch, slightly below the cams on the isolation switch shaft.

Normally open contacts (Isolation Switch a) ISa contacts are on the outside of the isolation switch housing. Normally closed contacts (Isolation Switch b) ISb Contacts are on the inside of the housing.

Figure 53 - Location of ISa and ISb Auxiliary Contacts

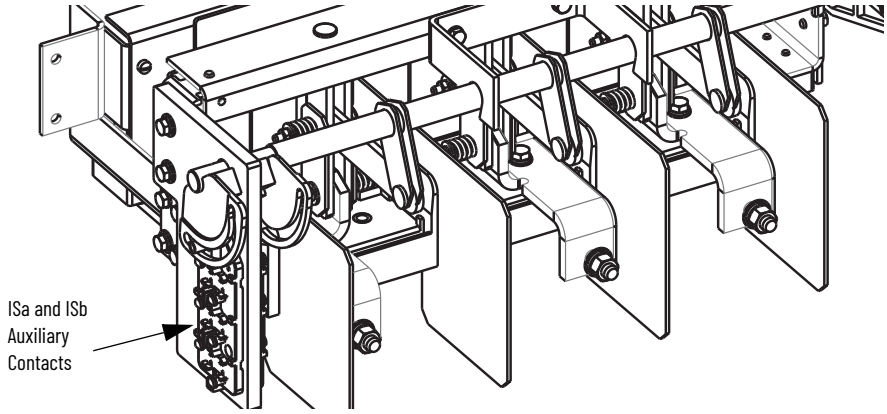

ISa and ISb contacts are the same (700 CPM). The cam controls the normally open or normally closed status of the contacts.

See Figure 37 on page 39 and Figure 38 on page 40 for wiring diagrams.

IMPORTANT The Isolation Switch Mechanism Grounding Adjustment on page 52 must be completed before adjusting the auxiliary contacts to make sure of proper synchronization of the assembly.

Isolation Switch Auxiliary Contacts

Adjusting the Normally Open (ISa) Contacts

ATTENTION: To avoid shock hazards and stop incoming power do the Power Lockout Procedure on page 43 before working on the equipment. Verify that all circuits are voltage free by using a hot stick or appropriate device that measures voltage. Failure to do so can result in severe burns, injury, or death.

1. Move the isolation switch handle to the OFF (open) position.
2. Loosen the bolt that holds the outside cam to the shaft. Do not loosen the bolt entirely. The cam must not be able to rotate freely on the shaft.
3. Move the isolation switch hand to the ON (closed) position and check that nothing stops the cam from rotating with the shaft.
4. Insert a 6.35 mm (1/4 in.) diameter pin into the cam groove between the cam follower and the end of the cam groove.

Figure 54 - Adjusting Auxiliary Contacts (ISa Auxiliary Contact Shown)

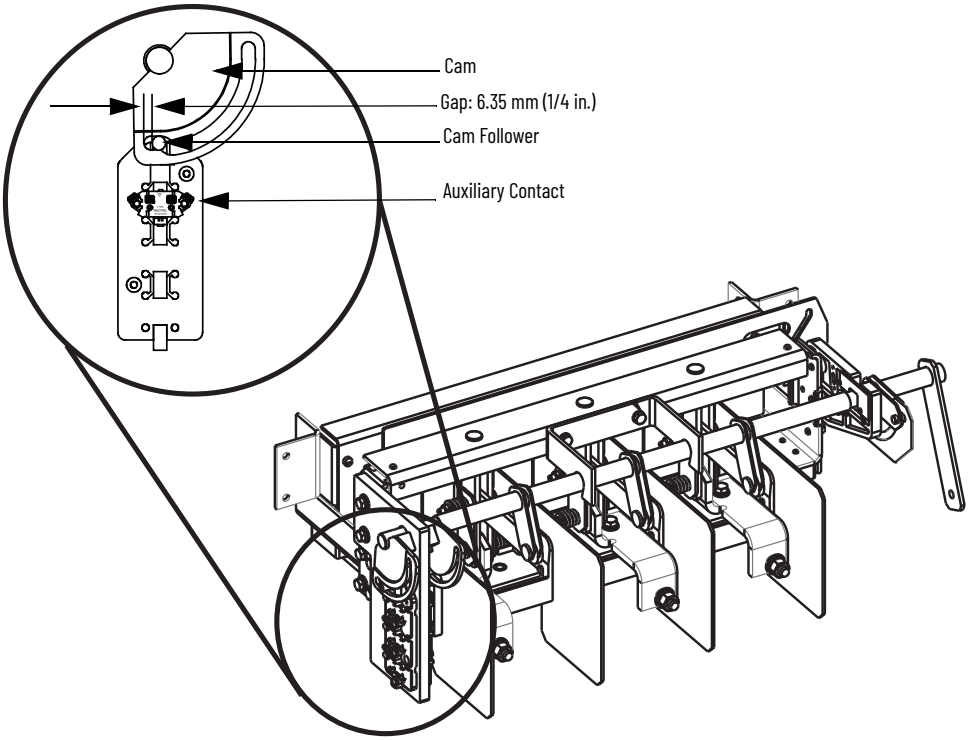

5. Adjust the cam on the shaft. The gap from the cam follower to the end of the cam groove must be the width of the pin 6.35 mm (1/4 in.).
6. Move the isolation switch handle to the OFF (open) position and check that nothing stops the cam from rotating with the shaft.
7. Tighten the 1/4-20 bolt holding the cam to the shaft (6 lb•ft [8 N•m]). Move the isolation switch handle to the ON position and recheck the gap using the pin.
8. Verify that auxiliary contact ISa is open when the isolation switch is open. Verify that ISa contact is closed when isolation switch is closed.

Adjusting the Normally Closed (ISb) Contacts

1. Move the isolation switch handle to the OFF (open) position.
2. Loosen the bolt holding the inside cam to the shaft. Do not loosen the bolt entirely. The cam must not be able to rotate freely on the shaft.
3. Insert a 6.35 mm (1/4 in.) diameter pin into the cam groove between the cam follower and the end of the cam groove.
4. Adjust the cam on the shaft. The gap from the cam follower to the end of the cam groove must be the width of the pin 6.35 mm (1/4 in.).
5. Tighten the 1/4-20 bolt that holds the cam to the shaft (6 lb•ft [8 N•m]). Move the isolation switch handle to the OFF position and recheck the gap using the pin.
6. Operate the isolation switch handle several times, then recheck the 6.35 mm (1/4 in.) clearance between the end of the cam groove and the follower pin for both cams.
7. Verify that auxiliary contact ISb is closed when isolation switch is open. Verify that ISb contact is open when isolation switch is closed.

Adjusting the Change of State Point

IMPORTANT This procedure sets the secondary electrical interlock. When properly adjusted, the electrical interlock is designed to open the control power circuit before the isolation switch opens as the isolation switch handle is moved to the OFF position.

1. After adjusting the auxiliaries, move the isolation switch handle to the ON position.
2. Connect a device that measures conductivity across the closed auxiliary contacts.
3. Slowly move the isolation switch handle towards the OFF position and observe the point at which the movable isolation switch blades separate from the incoming line stabs. The auxiliary contacts must change state from the closed to open position before the isolation switch blades lose contact with the incoming line stabs. This step prevents the isolation switch from being opened while the unit is energized and under load conditions.

ATTENTION: The auxiliary contacts must be properly adjusted to avoid opening the isolation switch under load conditions. Improper adjustment can result in damage to the equipment and/or severe burns, injury, or death to personnel.

4. If the auxiliaries do not change state before the isolation switch opens, repeat the auxiliary contacts adjustment procedure (see page 54).

Emergency Circumvention Procedure for Power Cell Entry

The interlocking mechanism of the medium voltage starter is designed to prohibit access to the power cell. Access is denied while the isolation switch handle is in the ON position and the isolation switch is closed.

IMPORTANT The following procedure is intended to be used only when the isolation switch cannot be opened as described in the Door Opening Procedure on page 11.

ATTENTION: This procedure can expose personnel to energized medium voltage components. Whenever possible, lockout incoming power before beginning this procedure. If you are unable to lockout incoming power, use the appropriate protective equipment and work practices to avoid shock hazards. Failure to do so can result in severe burns, injury, or death.

1. Remove the two #10-32 self-tapping screws (2.7 lb•ft [3.6 N•m]) from the Z-clip and remove the Z-clip.

Figure 55 - Z Clip

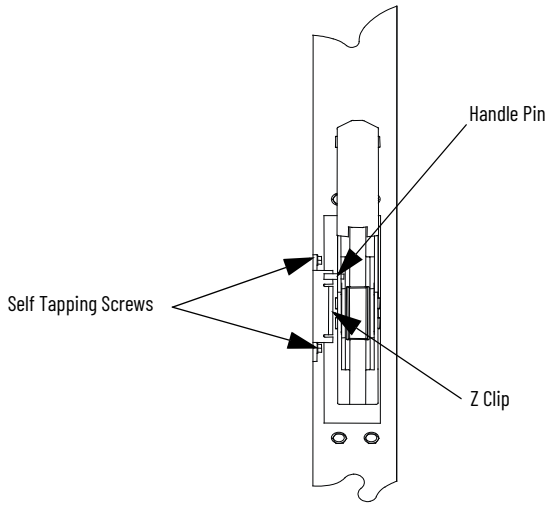

2. Unscrew the two locking 3/8-1.75 bolts for the MV door.
3. Using a flat-headed screwdriver, turn the defeater pin on the right side of the isolation switch handle (see Figure 56).
4. Open the power cell door.

Figure 56 - Defeater Pin

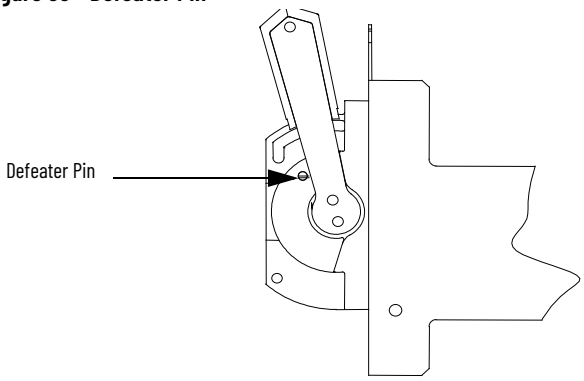

- If it is possible to move the isolation switch handle to the OFF position for reassembly, follow steps 5…10.
- If it is not possible to move the isolation switch handle to the OFF position for reassembly, follow steps 11…13.

ATTENTION: The Z-clip assembly must be reassembled to help ensure the interlocking mechanism functions properly. Failure to do so lets personnel access live medium voltage parts and can cause severe burns, injury, or death.

Installing Z-clip with Isolation Switch Handle in the OFF Position

5. Reattach the Z-clip (Figure 55 on page 57) using the self-tapping screws, but do not completely tighten them.
6. Move the isolation switch handle to the OFF position.
7. Swing the door closed and inspect the position of the Z-clip that is related to the handle pin.
8. Set the Z-clip so that it is just above the handle pin. Do not set the Z-clip more than 3 mm (0.125 in.) above the pin. Open the door and tighten the #10-32 screws (2.7 lb•ft [3.6 N•m]).
9. Close the door and move the handle to the ON position. Verify that the handle pin overlaps the Z-clip and prevents the door from opening.
10. Move the handle to the OFF position and tighten the 3/8-1.75 in. door locking bolts.

Installing Z-clip with Isolation Switch handle in the ON Position

11. Close the door and tighten the 3/8-1.75 in. door locking bolts.
12. Position the Z-clip as shown in Figure 55 on page 57. Make sure that the handle pin overlaps the top portion of the Z-clip.
13. Using the #10-32 self-tapping screws, reattach the Z-clip (2.7 lb•ft [3.6 N•m]).
14. Complete steps 5…10 at the earliest opportunity to confirm that the Z-clip assembly is correctly installed.

Spare Parts

The list of spare parts is valid for typical Bulletin 1512A and 1512AT units. Contact your local Rockwell Automation® office to help ensure that the following part numbers are available.

For 800 A contactor spare parts, see Medium Voltage Contactor 800 A, 2400...7200V (Series F) User Manual, publication 1502-UM054.

Spare Parts List

Table 2 - Spare Parts List

Part Number	Description	Recommended Stocking Quantity
80154-991-59	LV Control Panel (Electrically Held) (2)(3)	1
80154-991-61	LV Control Panel (Mechanical Latch)(2) (3)	1
1503VC-BMC5	IntelliVAC™ (Electrically Held and Mechanical Latch) (4)	1
80174-902-14-R	Internal IntelliVAC fuse – 6.3 A, 250V (Littlefuse 21506.3)(4)	1
Engineering Data(1)	Power Fuses (5)	3
Engineering Data(1)	Primary Fuses (CPT/PT)	2
Engineering Data(1)	LV Control Circuit Fuses	2
Engineering Data(1)	Heater Elements (if used)	3
40266-515-03	20 A Isolation Switch Auxiliary Contact Cartridge (700 CPM)	2
PN-272006	Rear Stationary terminals (Incoming line stabs)	3
80178-750-51	Phase A Isolation Switch Blade Assembly 800 A	1
80158-147-52	Phase B and C Isolation Switch Blade Assembly 800 A	2
RU-8216	Dow Corning 55 O-ring Lubricant	1

(1) Consult spare parts list in service manuals that are provided following delivery of equipment.
(2) The following is included with the LV Control Panel: CR1 relay, CR2 relay, rectifier, MOV assembly, test switch, test plug. **Note:** For mechanical latch assemblies, an additional CR1 relay is substituted for the CR2 relay.
(3) For starters with Electromechanical control.
(4) For starters with IntelliVAC™ control.
(5) Power fuses are R rated for motor loads or E rated for non-motor loads. Power fuses are sized to the motor or transformer load data that is provided at the time the starter is ordered. See dimensional drawings for specific fuse type and size. Bolt-on or clip-on fuses are available for various load sizes. Contact Rockwell Automation for details.

Notes:

ArcShield Unit Information

Overview

ArcShield™ units have a robust arc resistant enclosure design that is tested per IEEE C37.20.7. Each ArcShield™ structure was tested to withstand the effects of an arc flash at 40 kA or 50 kA for 0.5 s. ArcShield units provide an enhanced Type 2B Accessibility level.

ArcShield Design

ArcShield units typically include a pressure relief vent on the roof of the structure (some incoming units cannot have a pressure relief vent if top cable entry is required). Under arc flash conditions, the pressure relief vent opens to allow hazardous flames and gases to exit the enclosure via plenum or chimney system. The low voltage panel area is sealed to prevent flames and gases from entering; however, suitable personal protective equipment (PPE) must be used whenever working on live circuits.

ATTENTION: To help ensure Arc resistant integrity, it is important to following these rules:

- The pressure relief vent cannot be tampered with. Do not use it as a step.
- No alterations can be made to the ArcShield structure.
- All covers, plates, and hardware that is removed for installation or maintenance purposes must be reinstalled and properly secured. Failure to do so voids the arc resistant integrity.
- Treat power cable entry points as the boundary between a hazardous location and sealed accordingly. Failure to do so voids the arc resistant integrity.
- A plenum or chimney must be used to direct the arc flash energy to a suitable location. Failure to do so voids the arc resistant integrity. See Appendix B for plenum installation instructions. See Appendix C for chimney installation instructions.
- All wiring between the low voltage panel and the power cell must be routed through a suitable gland. This routing is to help ensure flames and gases are not transmitted into this area (as fitted from factory).
- The medium-voltage power cell doors must be properly secured by using both the handle mechanism and the door bolts (refer to instruction label on the power cell door and in Chapter 3). Failure to do so voids the arc resistance integrity.

Exhaust Systems: Chimney or Plenum Option

Plenum Information

A plenum can be provided for each unit. The plenum can be field-mounted on the top of the unit structure (some incoming units cannot have a plenum if top cable entry is required). The purpose of the plenum is to direct the hazardous flames and gases away from the top of the arc resistant enclosure. Unit plenums are secured to the top of the unit structure and to adjacent plenums to create a continuous conduit for release of the arc flash energy. See Appendix B for plenum installation instructions.

Each plenum, ArcShield line-up includes a plenum exhaust piece that extends beyond either the left or right ends of the line-up. The other end of the plenum is capped with an end cover. Extensions can be added to the plenum. The extensions can allow the arc flash energy and plasma gases to be safely vented to an area further away from the ArcShield line-up.

Figure 57 - Elements of the ArcShield Plenum

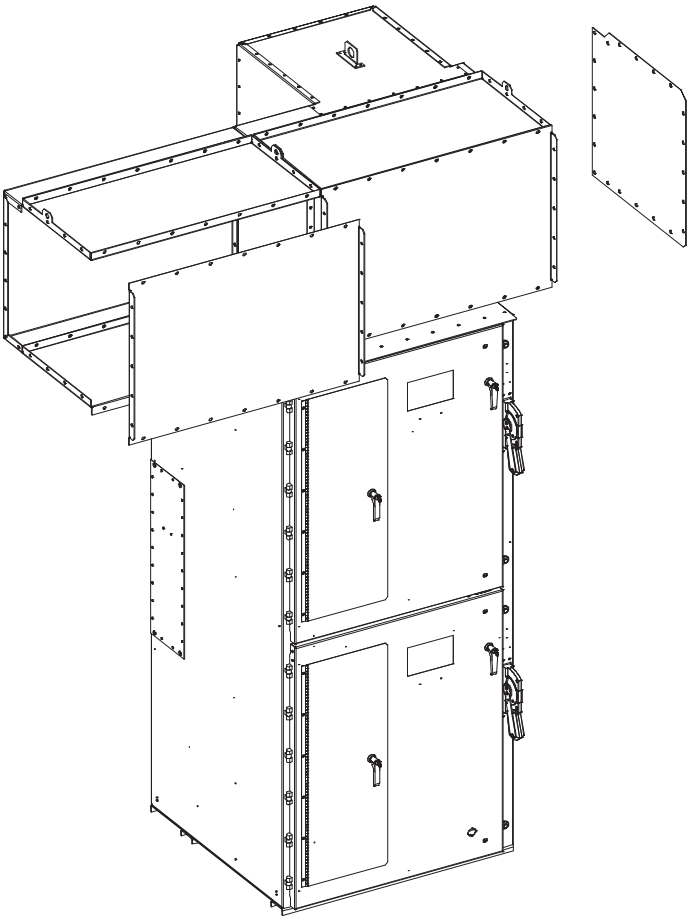

Figure 58 - Cross-section of plenum extension, dimensions in mm [in.]

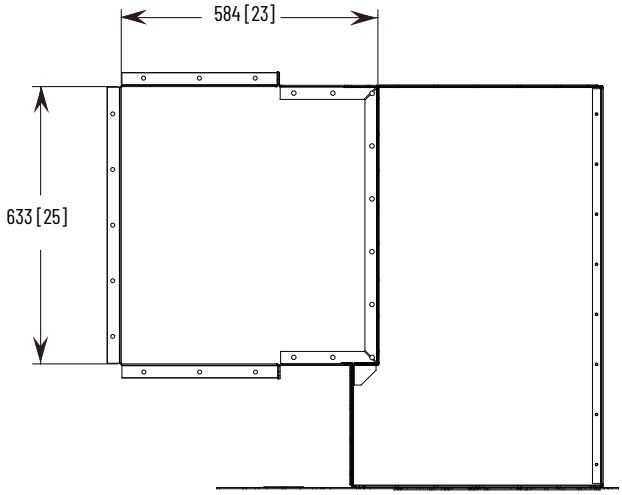

Plenum Exhaust Considerations

The options for locating the plenum exhaust are:

1. Plenum ducted to an area of the control room where arc gases are permitted to escape, with plenum extensions (see Figure 59, Figure 60, and Figure 61).
2. Plenum duct to outside of control room (see Figure 59 and Figure 60).

Plan the location where the plenum exhausts. Make sure that:

- There is no access to personnel while equipment is energized.
- Area is free of flammable material or vapors.

Make sure that adequate space is provided around the plenum exhaust, as outlined in Figure 59 through Figure 61.

IMPORTANT	Equipment in the area of the plenum exhaust point can be damaged or destroyed.

Figure 59 - Plenum Exit Left with Extensions to Internal Controlled Access Area (Top View)

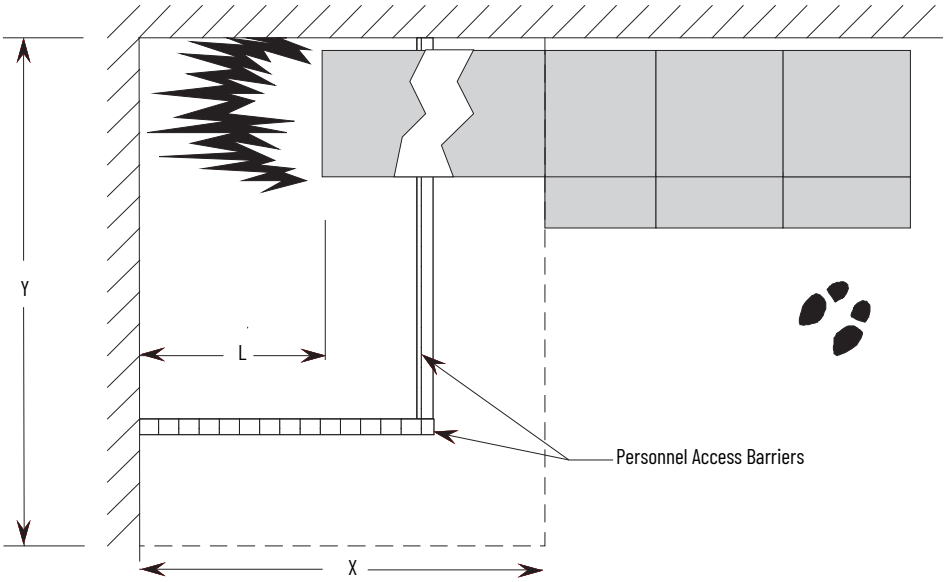

Figure 60 - Plenum Exit Left with Extensions to Internal Controlled Access Area (Front View)

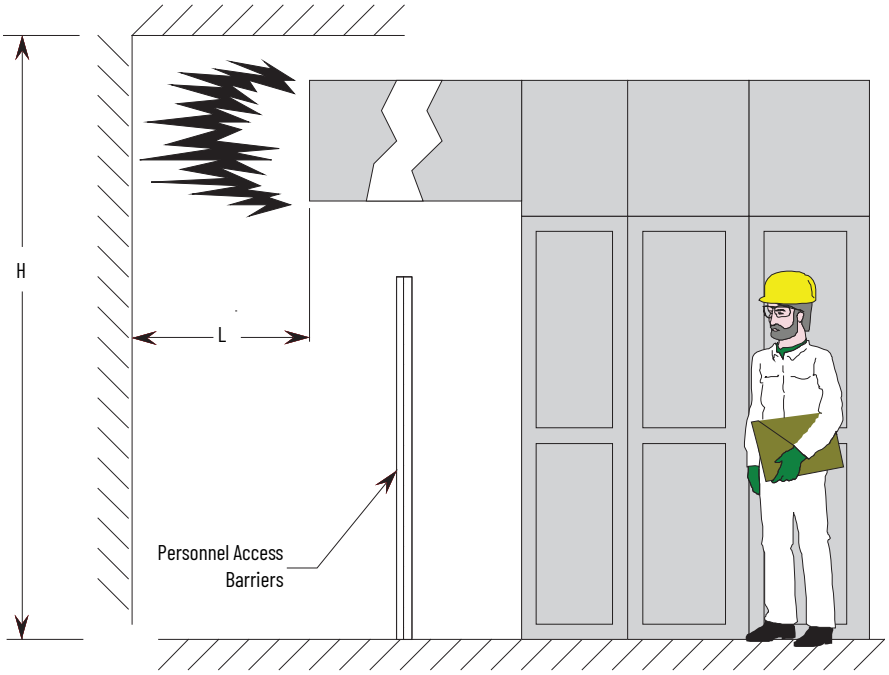

- Minimum H = 3.5 m (138 in.)
- Minimum L = 1.2 m (47 in.)
- Minimum Volume of space that is required for safe pressure relief:
  - X *Y* H = 11 m^3 (390 cubic feet)

Figure 61 - Chimney Exhaust Space Requirements

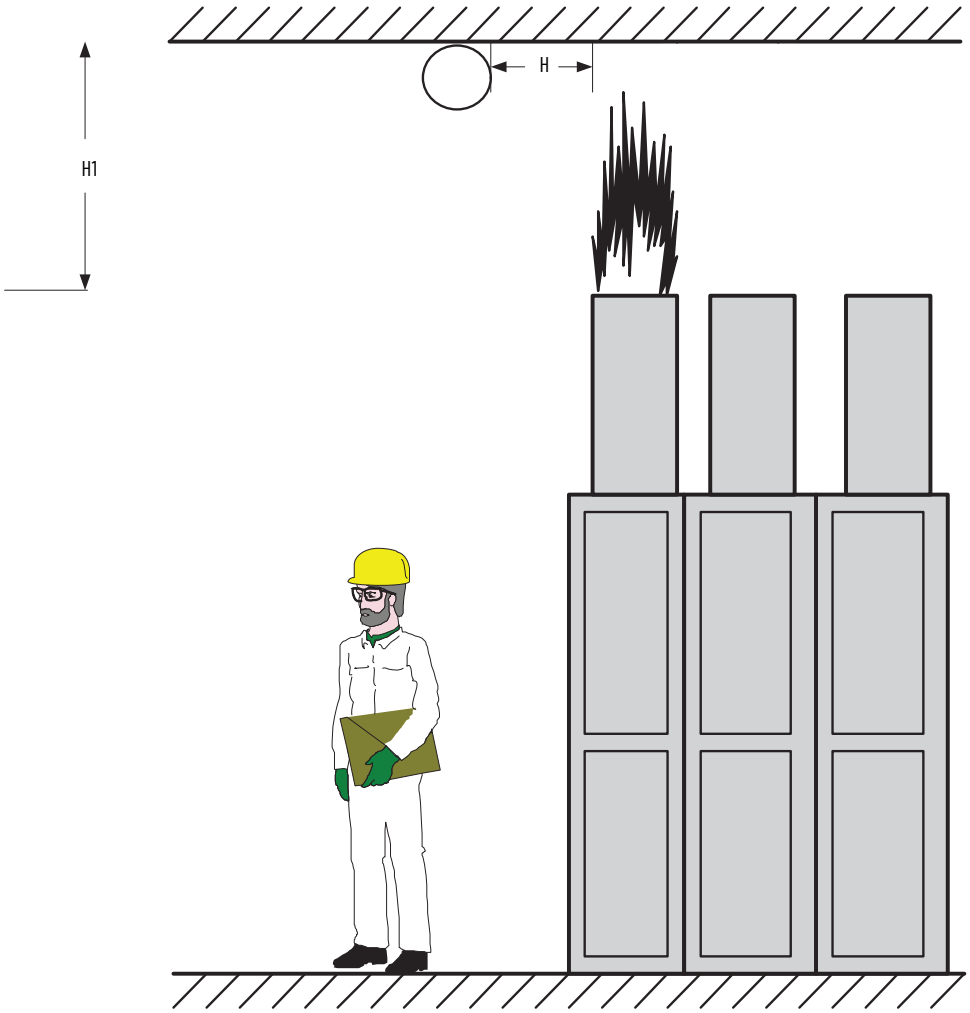

- Minimum H1: 1.7 m (67 in.)
- Minimum H: 1 m (37 in.)

Additional Notes

The walls of the plenum exit area must be able to withstand the generated pressure.

Any painted surfaces, which face direct contact with the arc products, can ignite. Flame suppression is recommended.

The exit point can also be outside the building. Make sure that ice, snow, and vermin nests cannot block the exit area.

Access barriers are recommended to restrict access by personnel while the equipment is energized. A chain link fence is a suitable barrier material.

Equipment that consists of more than four vertical sections that are bolted together can require additional plenum exits. Rockwell Automation® provides guidance on requirements for additional plenum exits when required.

Chimney Information

Where adequate clean height (space) is available, a chimney can be provided for each unit in place of the plenum system. It can be field-mounted on top of the unit structure. The chimney directs the hazardous flames and gases away from the top of the resistant enclosure. The chimney is secured to the top of each unit structure. See Appendix C for chimney installation instructions.

Each ArcShield line-up includes a chimney exhaust section that extends vertically directly above the enclosure.

Chimney Exhaust Considerations

1. From the outlet of the chimney, the minimum clear distance is 1.7 m from the top of the chimney to the ceiling, and 1 m (39 in.) on each side.
2. No obstructions, for example Piping, can be in path of the exhaust within the 1.7 m (67 in.) height requirement.

Plan the location where the chimney exhausts. Make sure that:

- There is no access to personnel while equipment is energized.
- Area is free of flammable material or vapors.
- Make sure that adequate space is provided around the chimney exhaust as outlined in Figure 61.

ArcShield Plenum Installation Instructions

The following instructions are provided to help ensure the proper installation and function of plenum components that are supplied with ArcShield™ enclosures. See Appendix A for additional information that is related to ArcShield™ plenums before attempting to follow these instructions.

Recommended Torque Values

1/4-20 Thread Fasteners – 15 N•m (12 lb•ft)

5/16-18 Thread Fasteners – 14 N•m (11 lb•ft)

Plenum Bracing

The Bracing of the plenum must be able to withstand the dynamic forces of the arc fault and any other vibration or seismic effects that are associated with the installation. Most of this force is in the direction opposite to where the relief vent exits. The amount of bracing depends on how the plenum is supported at its exit and the distance from the end of the cabinets to the exit vent.

- A flange is available to install hangers for supporting the weight of the plenum.
- The plenum extension has holes for mechanical support.
- Weight per unit length of Rockwell supplied plenum = 28 kg/m (19 lb•ft).
- The installer is responsible for making sure that the plenum extension has sufficient support to resist the effect of vibrations and seismic effects.

IMPORTANT Plan the location where the plenum exhausts (refer to Appendix A). Equipment in the area of the plenum exhaust can be damaged or destroyed. Mark the plenum exhaust area as a Hazardous Zone, and labeled per Figure 62.

Figure 62 - Plenum Exhaust Label

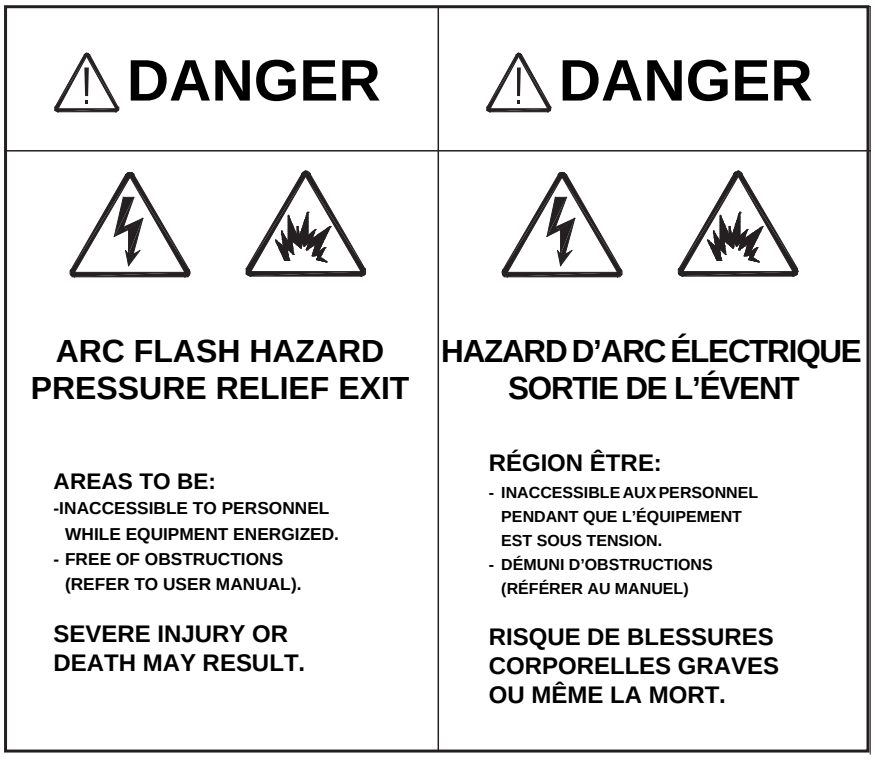

Figure 63 - Various Plenum Components Available

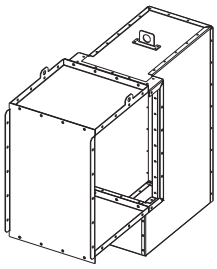

18 in. wide Plenum
Fastened directly over the 0.5 m (18 in.) wide cabinet

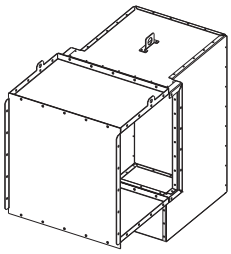

26 in. wide Plenum
Fastened directly over the 0.7 m (26 in.) wide cabinet

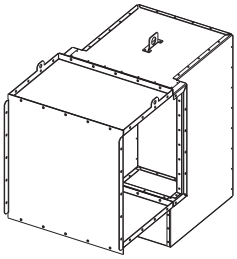

36 in. wide Plenum
Fastened directly over the 0.9 m (36 in.) wide cabinet

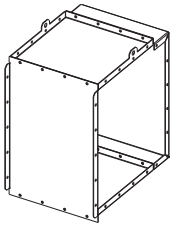

18 in. long Extension
Connected to the last Plenum on the exhaust end of the "line-up"

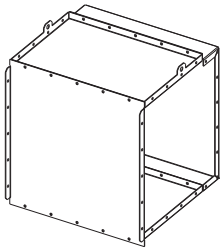

26 in. long Extension
Connected to the last Plenum on the exhaust end of the "line-up"

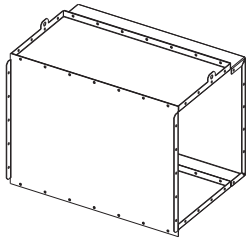

36 in. long Extension
Connected to the last Plenum on the exhaust end of the "line-up"

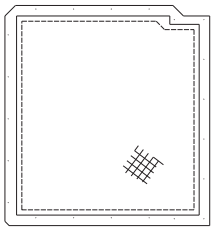

Screen Cover Plate
Fastened at the opening of the last component on the exhaust end

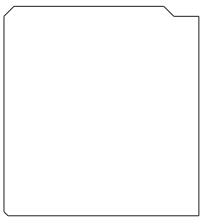

End Cover Plate
Fastened at the opening of the last Plenum in the "line-up" opposite the exhaust end to seal Plenum end

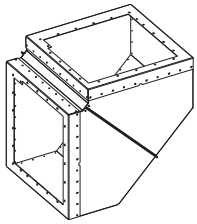

90° Elbow Section
Connected at the exhaust end of the Plenum (or Extension)

General Plenum Layout for ArcShield Line-up

An example of a general Plenum assembly configuration is shown in Figure 64. Plenums of various widths are mounted directly over the MV enclosures of the corresponding width. A 0.9 m (36 in.) Exhaust extension assembly is shown mounted on the extreme right side Plenum of the equipment "Line-up" (can alternatively exhaust to the left. Engineered systems can be made site specific).

Figure 64 - Typical ArcShield Line-up

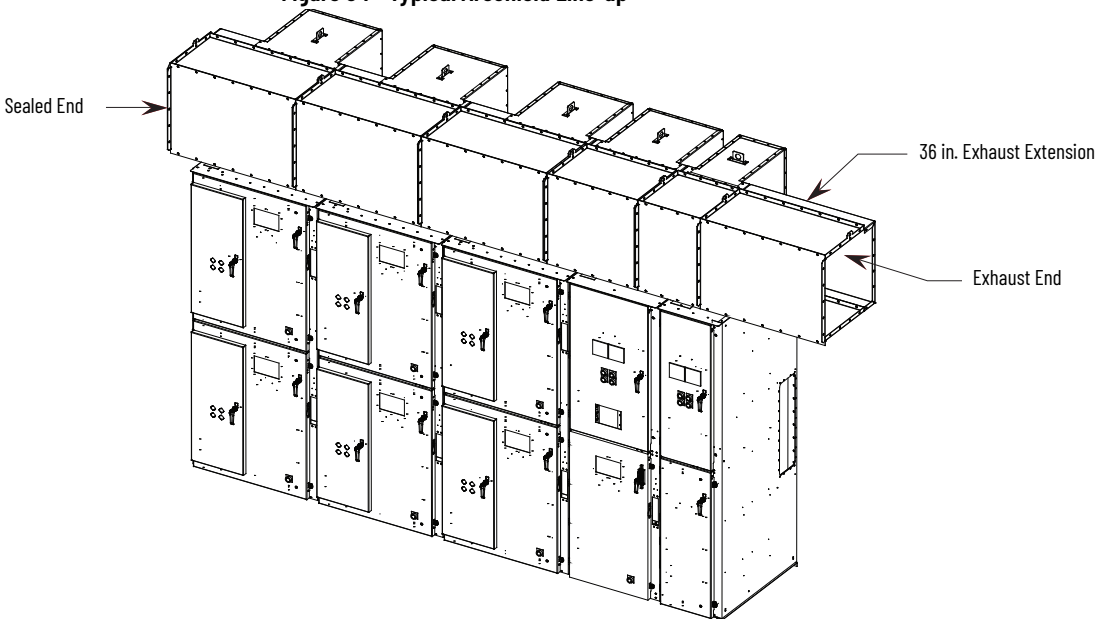

Plenum exhaust can be on the left or right-hand end of the line-up. Pictures and figures in this procedure are shown for a right-hand exhaust exit direction. Also shown is an optional vertical (top) direction exhaust extension.

IMPORTANT	Plenum components that are not directly mounted to the tops of the MV enclosures, must have additional mounting support. This requirement includes the Extension components and 90° Elbow Sections (refer to STEP 7 – Additional Mounting Support on page 76).

STEP 1 – Mounting a Single Plenum

Before mounting a plenum over an MV enclosure, the front duct section must first be removed, see Figure 65.

Figure 65 - Removing Front Duct Section

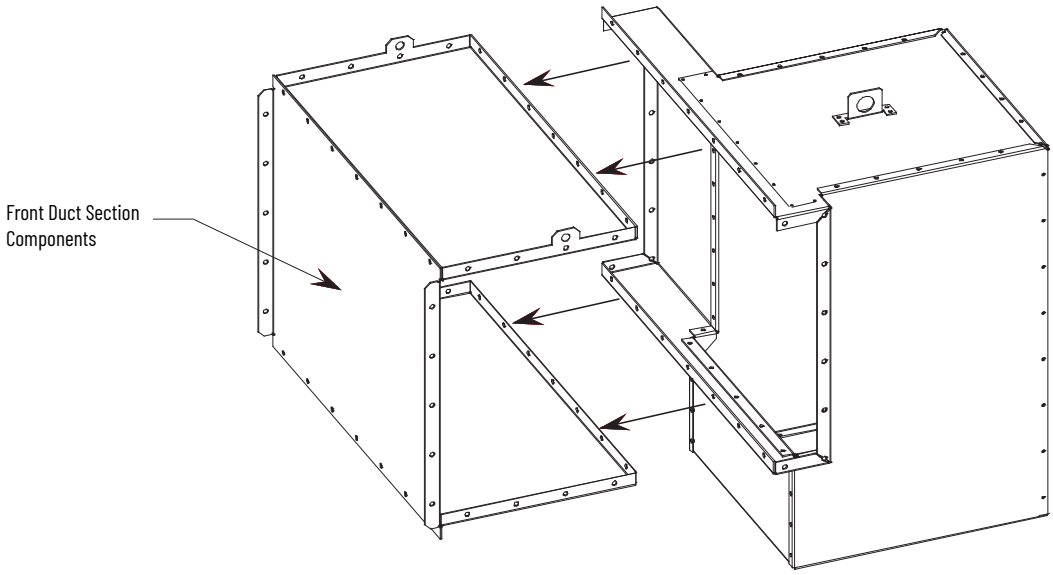

Cabinet Preparation

In preparation to mount the plenum:

1. Remove the cabinet lifting means (slips of lifting angles).
2. Reinstall the 5/8-11 bolts retaining the lifting means in the holes from where they came (12 lb•ft [15N•m]). Failure to install the bolts negates the cabinets ability to control any arc gases properly.
3. After the lifting angles or clips are removed, remove 1/4-20 fasteners from the relief vent on the top of the MV enclosure. Leave the (4) corner fasteners in place (see Figure 67).

ATTENTION: Hardware that is used to retain the lifting provision hardware must be reinstalled in the same holes. Failure to reinstall this hardware makes the arc resistance of the cabinet ineffective and could subject personnel to the possibility of severe burns, injury, or death.

IMPORTANT Do not remove the four corner fasteners (Figure 67).

Figure 66 - Typical Relief Vent Fasteners (top view)

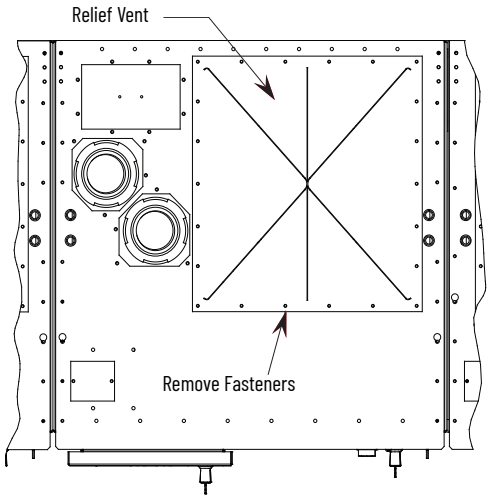

Figure 67 - Relief Vent

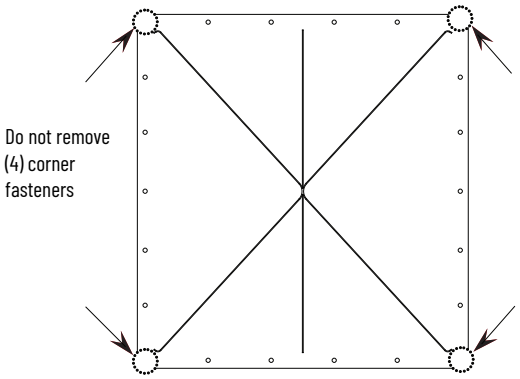

The plenums are designed to fit over the fastener heads at the corners of the relief vent. The corner fasteners are required to secure the relief vent during installation.

Plenum Placement on Structure

After lifting the plenum in to place, directly over the relief vent (see Figure 68). Reinstall all 1/4-20 fasteners (12 lb•ft [15N•m]), which were removed in Cabinet Preparation and attach the plenum to the top of the enclosure. Use hand tools only.

Figure 68 - Plenum Placement

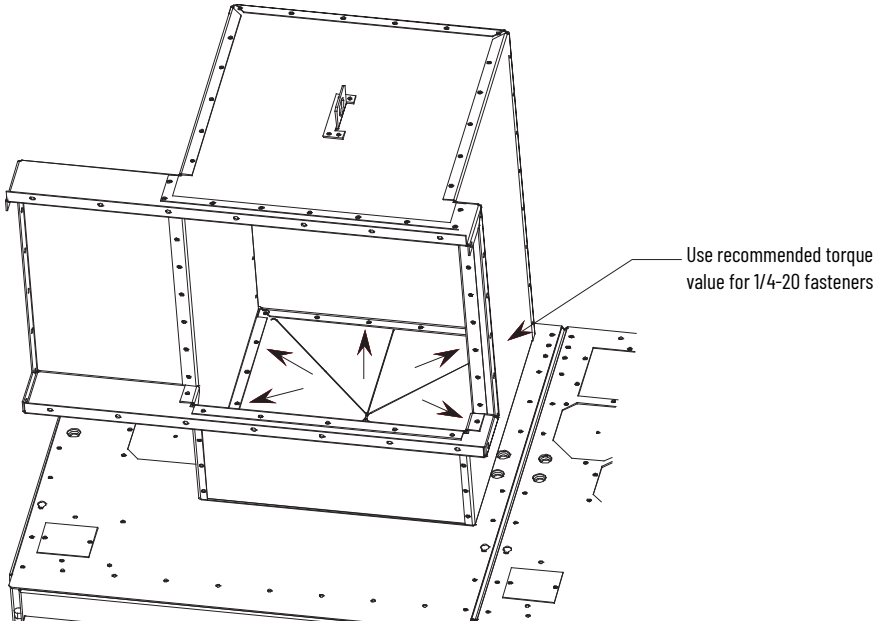

Use silicone caulking generously to fill any air gaps when the Plenum is securely mounted in place.

STEP 2 – Alignment of 'Side-by-Side' Plenums

Plenums that are mounted side-by-side must be fastened together through the aligning holes using 5/16 in. supplied hardware (see Figure 69).

Figure 69 - Aligning 'Side-by-Side'" Plenums

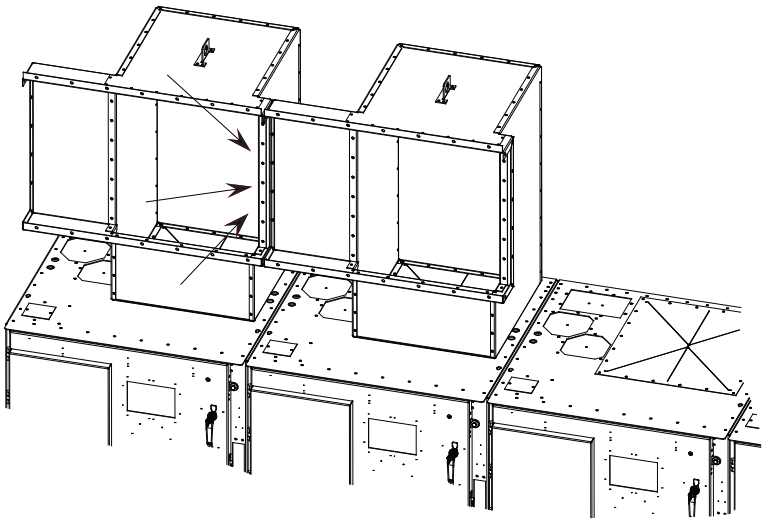

IMPORTANT	Any unused holes must be filled with thread forming screws. All gaps must be sealed and filled with silicone.

STEP 3 – Sequence of Final Assembly

All Plenums in a Line-up must be mounted to the top of each enclosure and to the Plenum directly beside it before the front duct sections are reattached (see Figure 65).

Figure 70 - Sequence of Final Assembly

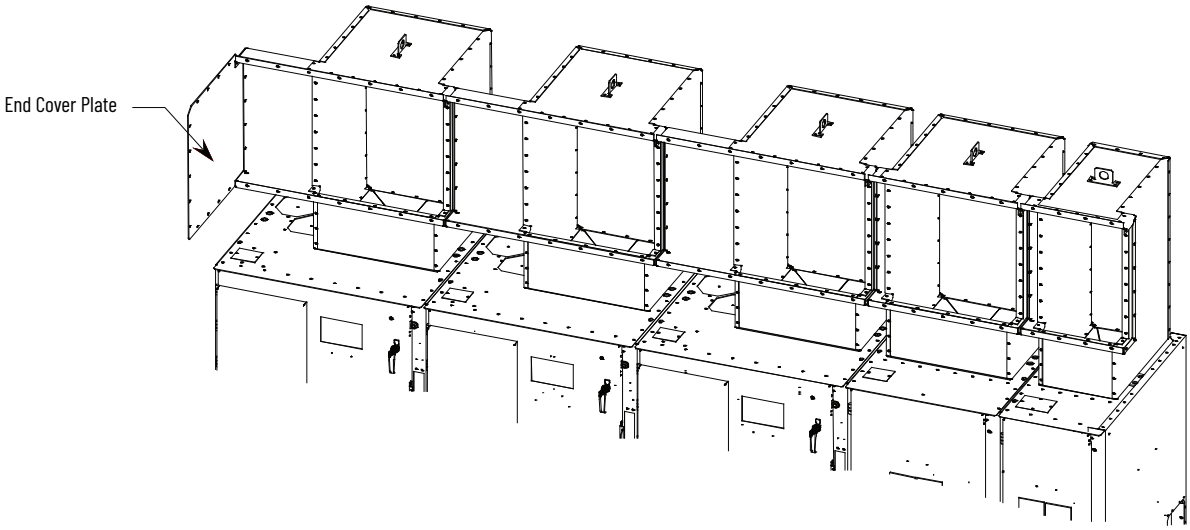

The end cover plate must be mounted on the closed end of the line-up using 5/16 in. hardware (see Figure 70).

STEP 4 – Closing the Front of the Plenum Sections

After the first stage of the plenum assemblies are mounted, the Plenums can then be closed-up. Install the front duct sections as shown in Figure 71 to Figure 73.

Figure 71 - Top Plate

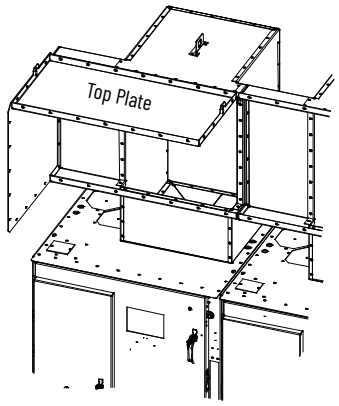

Figure 72 - Bottom Plate

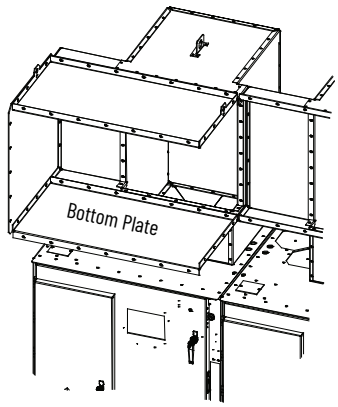

Figure 73 - Front Closing Plate

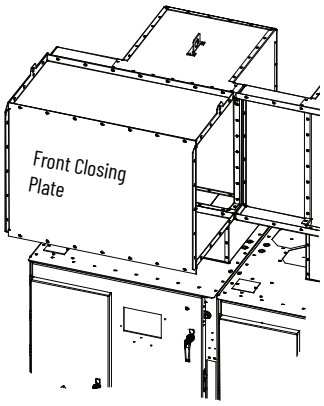

IMPORTANT Do not reinstall the front duct section of the last plenum on the exhaust side of the Line-up. See STEP 6 – Mounting Extension/Elbow to Plenum Line-up on page 75 for more information).

Use silicone caulking generously to fill any air gaps when the plenum is securely mounted in place.

STEP 5 – Extension and Elbow Assembly

Attach the 36 in. extension components and 90° elbow section using 5/16 in. hardware in the following sequence:

Step 5A – See Figure 74

Step 5B – See Figure 75

Step 5C – See Figure 76

The screen cover plate is attached in Figure 75.

Figure 74 - 90° Elbow Section Assembly, Step 5A (Front View)

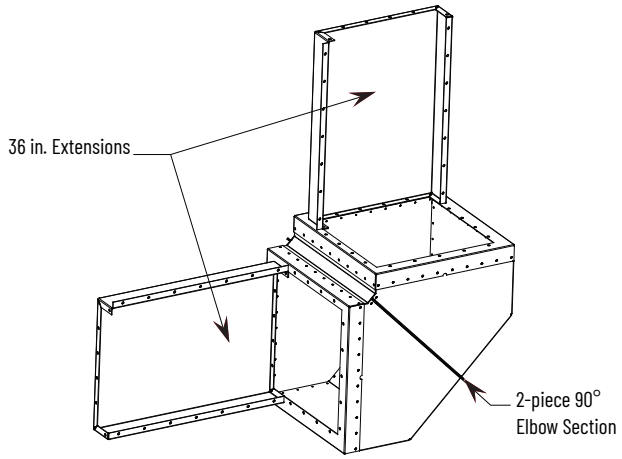

Figure 75 - 90° Elbow Section Assembly, Step 5B (Front View)

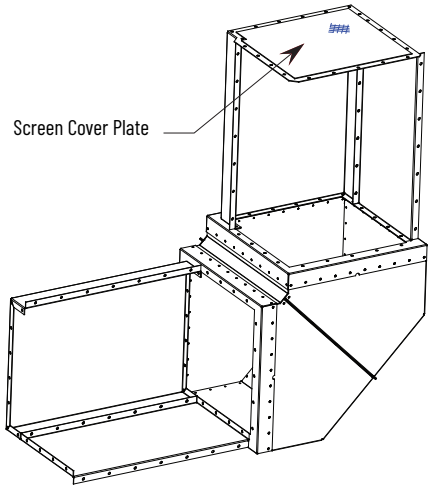

Figure 76 - 90° Elbow Section Assembly, Step 5C (Front View)

The Extension components are attached to the Elbow Section using 5/16 in. hardware.

Figure 76 illustrates what the extension/elbow assembly should resemble when finished.

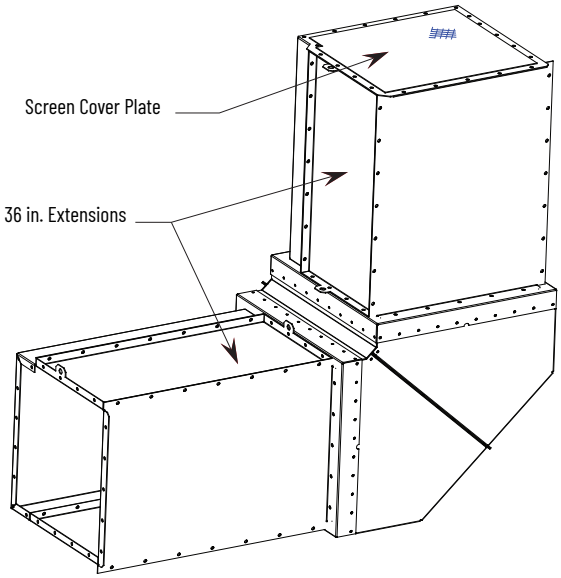

Use silicone caulking generously to fill any air gaps when the Plenum is securely mounted in place.

STEP 6 – Mounting Extension/Elbow to Plenum Line-up

In STEP 4 – Closing the Front of the Plenum Sections on page 73, the last Plenum at the exhaust side of the line-up has the front duct section removed. The absence of the section allows access to fastener holes to mount the Extension/Elbow components (see Figure 77).

Figure 77 - Optional Extension/Elbow with Vertical Extension (Right side exit)

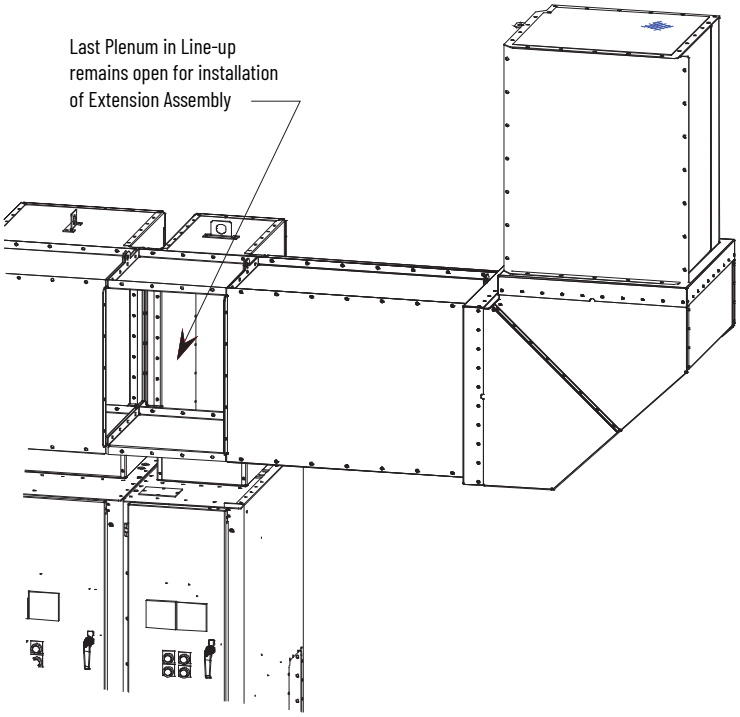

Attach the Extension/Elbow assembly through the fastener holes on the inside flange of the Plenum. Install the front duct section and fasten it through the holes on the outside flanges.

STEP 7 – Additional Mounting Support

The Extension/Elbow Assembly must have additional mounting support.

90° Elbow Section: Approximate weight 64 kg (142 lb)

36 in. Extension Assembly: Approximate weight 51 kg (112 lb)

Figure shows an example of how the Extension/Elbow Sections are supported by suspension from a high ceiling. Points **A**, **B**, and **C** show where chains or high tension cables can be connected.

Completed Assembly for optional vertical exit Plenum (Right-hand exit)

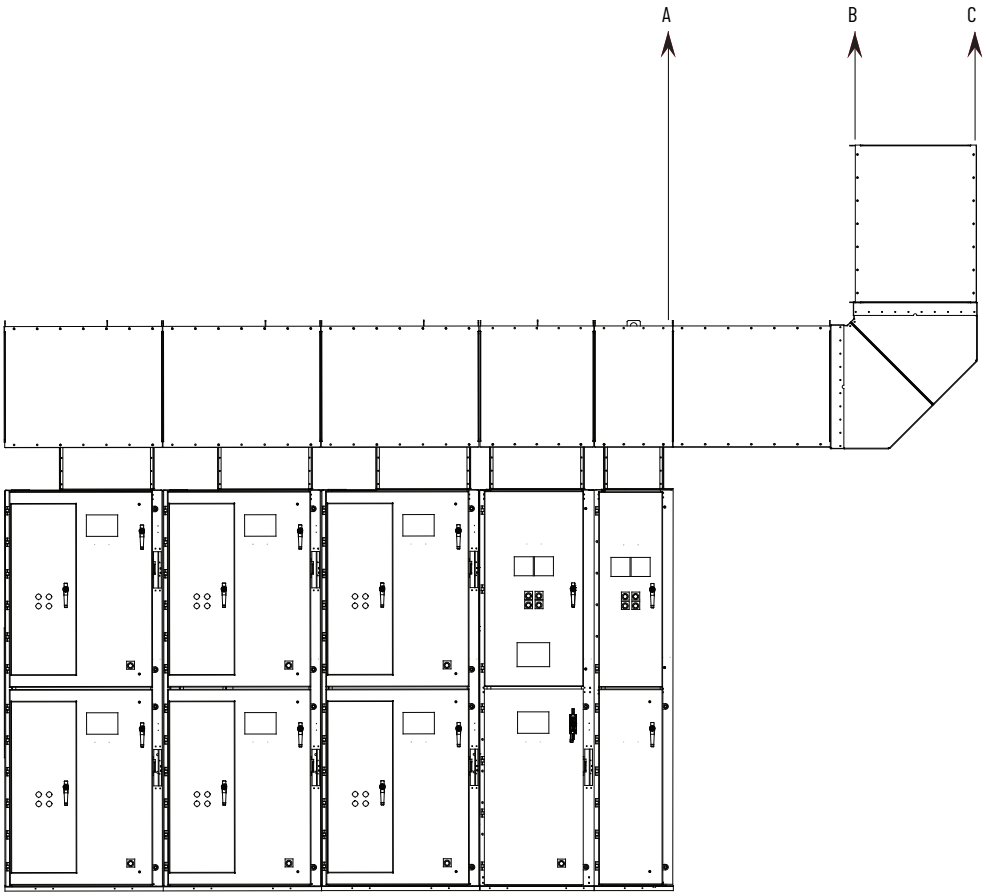

During an arc fault, the plenum is subjected to a brief high-pressure shock wave. The Extension/Elbow assembly can experience dynamic loading. It is important to account for dynamic loading when selecting the means of support and materials.

ArcShield Chimney Installation Instructions

These instructions are provided to help ensure the proper installation and function of chimney that is supplied with ArcShield™ enclosures. See Appendix A for additional information that is related to ArcShield™ chimney before attempting to follow these instructions.

Recommended Torque Values

1/4-20 Thread Fasteners – 15 N•m (12 lb•ft)

5/16-18 Thread Fasteners – 14 N•m (11 lb•ft)

Figure 78 - Chimney Exhaust Label

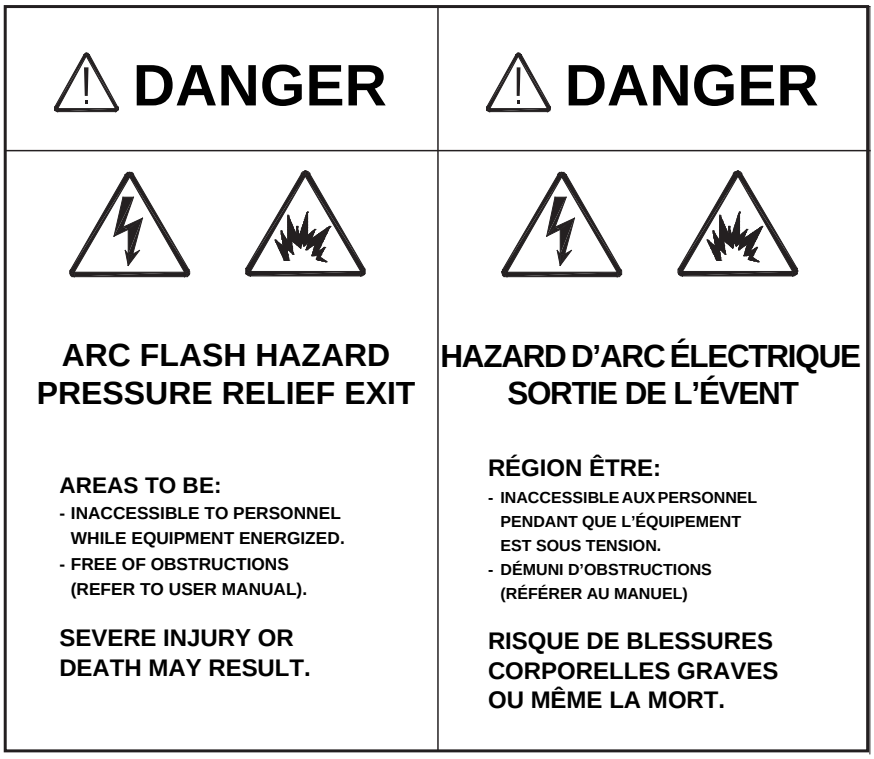

General Plenum Layout for ArcShield Line-up

An example of a general chimney assembly configuration is shown in Figure 79. Chimneys of various widths are mounted directly over the MV enclosures of the corresponding width.

Figure 79 - Typical ArcShield Line-up with Chimney Options

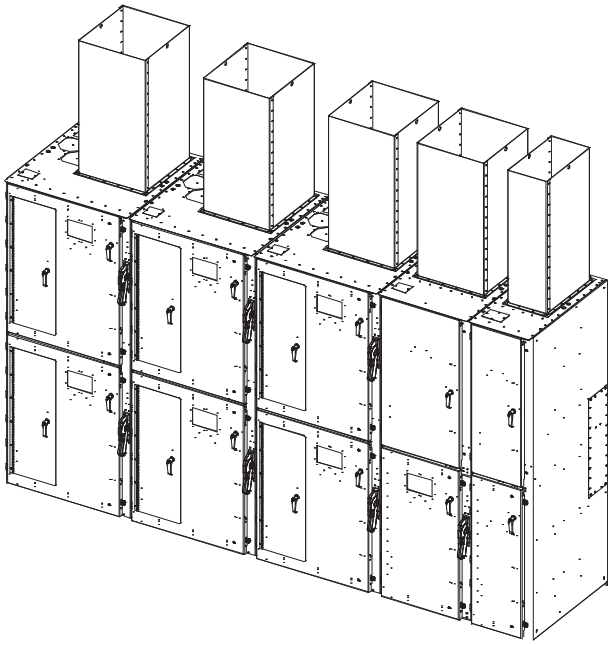

Cabinet Preparation

In preparation for mounting a chimney:

1. Remove the cabinet lifting means (slips of lifting angles).
2. Reinstall the 5/8-11 bolts retaining the lifting means in the holes from where they came (12 lb•ft [15N•m]). Failure to reinstall the bolts negates the cabinets ability to control any arc gases properly.
3. After the lifting angles or clips are removed, remove 1/4-20 fasteners (12 lb•ft [15N•m])from the relief vent on the top of the MV enclosure.

ATTENTION: Hardware that is used to retain the lifting provision hardware must be reinstalled in the same holes. Failure to reinstall this hardware makes the arc resistance of the cabinet ineffective and could subject personnel to the possibility of severe burns, injury, or death.

IMPORTANT Do not remove the four corner fasteners (Figure 81)

Figure 80 - Relief Vent Fasteners (top view)

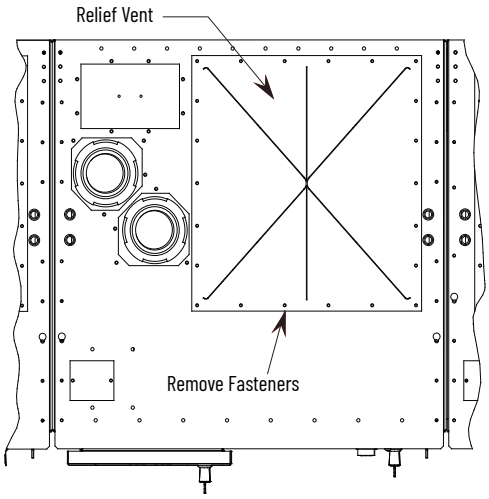

Figure 81 - Relief Vent

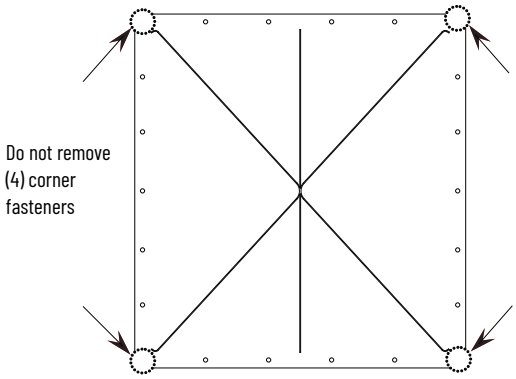

The chimneys are designed to fit over the fastener heads at the (4) corners of the relief vent. The corner fasteners are required to secure the relief vent during installation.

Chimney Placement on Structure

After lifting the chimney in place, directly over the relief vent (see Figure 81). Reinstall all 1/4-20 fasteners, which were removed in Cabinet Preparation on page 78 and attach the chimney to the top of the enclosure (12 lb•ft [15N•m]).

Figure 82 - Chimney Placement

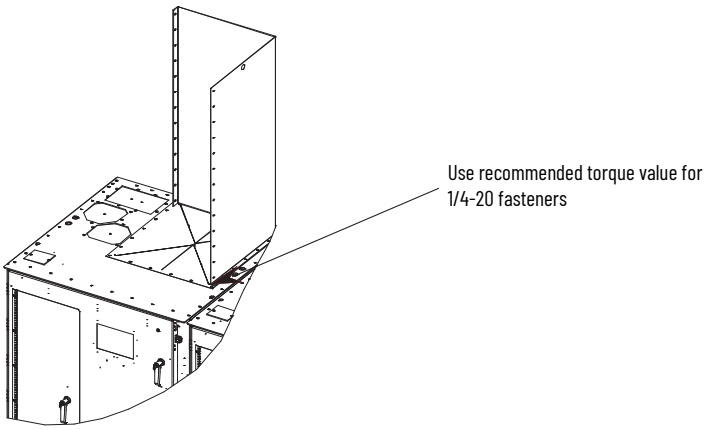

Use silicone caulking generously to fill any air gaps when the chimney is securely mounted in place.

Notes:

Integrated Protective Maintenance Grounding Device

Overview

The Integrated Protective Maintenance Grounding device (IPMG) is an optional feature that provides an over-center, spring loaded, snap action device that provides a low impedance grounding path for all load connections on CENTERLINE™ Bulletin 1500/1900 medium voltage motor controllers. The IPMG device can make and withstand short-circuit currents within its capabilities, from both feeding directions within the motor controller, without any latching mechanism. It is applied to safely ground/earth the load connections to three-phase motors, power transformers, and power capacitors ensuring that no harmful voltages are left or become present on the load connections before maintenance personnel enter the motor controller or service the equipment at the end of the load cable connections.

Typical Controller Single Line showing the optional IPMG

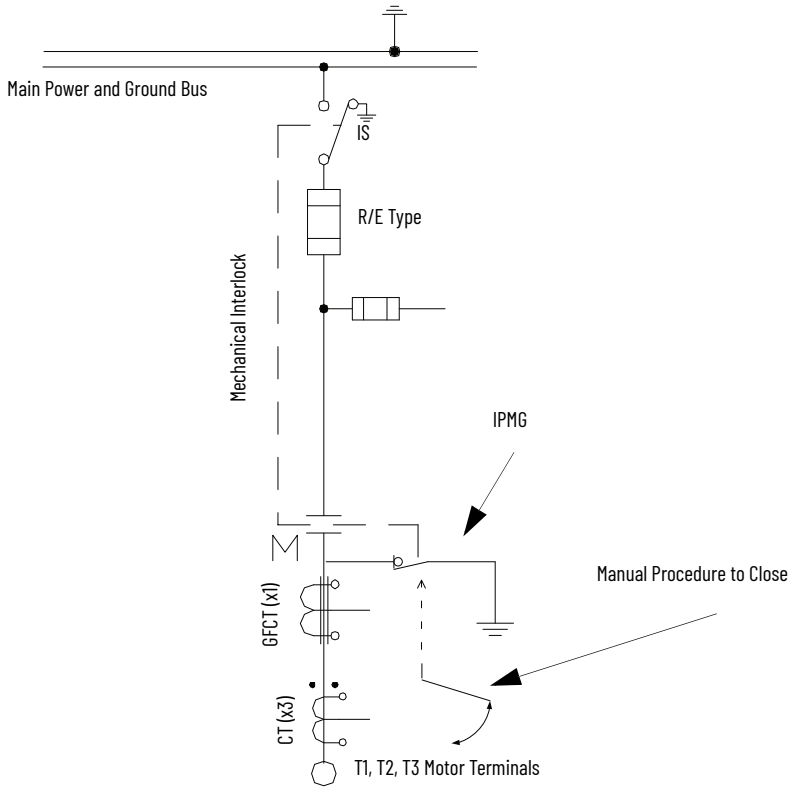

The compact design of the IPMG device does not compromise its rugged construction and proven performance under industrial operating conditions. Requiring minimal maintenance, this manually operated device is controlled from the outside of the standard and arc-resistant (ArcShield™) medium voltage controllers. It is mechanically interlocked to both the main vacuum contactor and our non-load break isolation switch. These features, along with its high electrical and mechanical endurance capabilities, provide a long-life and dependable maintenance free operation.

To enhance your safety program requirements, a visual indication of the blade positions of the IPMG device (OPEN or CLOSED) is available through the standard viewing window on the medium voltage compartment door.

The IPMG device is mounted on the controller floor plate or on the top of the main medium voltage vacuum contactor (for 600/800 A controllers). It is connected to the three load phases within the main controller using power cables. Redundant, flexible grounding conductors ensures the lowest impedance path to ground is maintained when the IPMG device is closed. Flexible grounding conductors provide low impedance back to the main ground bus to complete the grounding (earthing) process.

IPMG Operation

The IPMG device is a manually operated earthing device that is controlled by a direct drive system that is engaged from the exterior of the controller. A removable operating handle engages or disengages the IPMG device from an OPEN to CLOSED or CLOSED to OPEN position.

The rotational angle of the switch handle is approximately 180° to engage or disengage the grounding action of the IPMG device.

1512A Cabinet with 800 A IPMG Showing the Operating Handle Engaged in Drive Mechanism

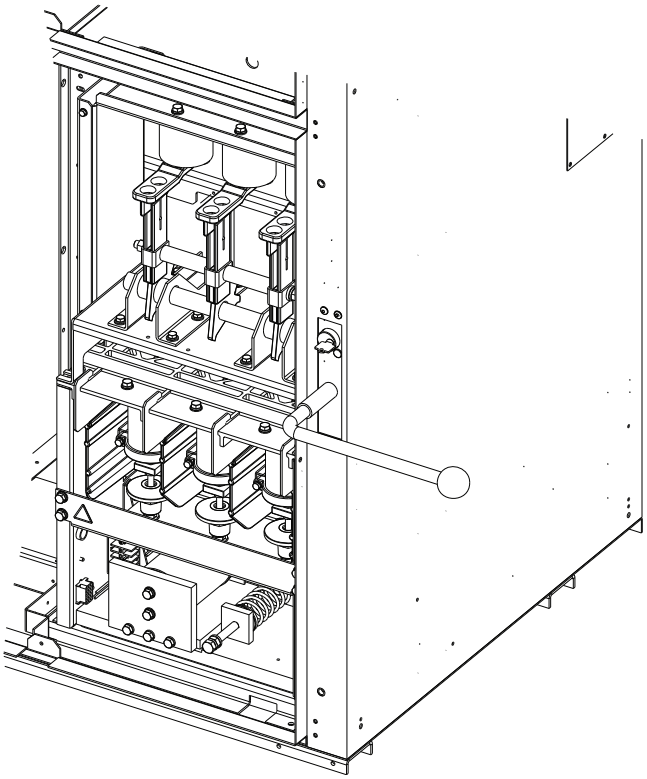

Operating Handle

The separate operating handle is suitable for use only for the hex splined interface shaft of the IPMG device. The handle includes an ergonomic insulated grip to aid in the operation of the IPMG device. Significant rotational force is required to engage or disengage the IPMG device.

A 17 mm hexagonal socket with a socket wrench of equal length can also be used to operation the switch,.

IPMG Operating Handle (Removable)

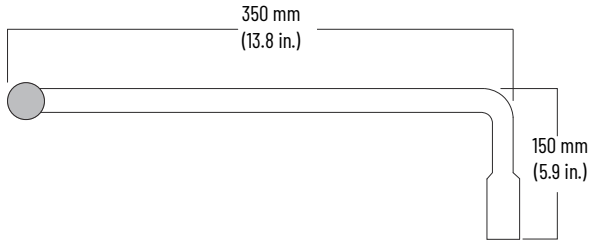

ATTENTION: Before opening or closing the IPMG device, confirm that:
- the isolation switch is in the OFF position
- the main vacuum contactor is OPEN
- the medium voltage compartment door of the controller is closed and bolted tight
- the motor is in a standstill condition before closing the IPMG

ATTENTION: The IPMG device can only be closed when the load has no energy.

Close the IPMG Device from an OPEN Position

1. Insert the operating handle and hex shaft, through the hole in the front of the structure. Place the handle to accommodate at least 180° of counterclockwise motion. The hexagon-shaped shaft must fully mate to the connection of the IPMG operating shaft.
2. Rotate the operating handle, in one motion, approximately 180° counterclockwise until the switch flips into its CLOSED position (there is a significant sound as the IPMG device engages).
3. Remove the handle.
4. Verify the CLOSED position of the IPMG device by viewing the blade positions through the standard viewing window.

Close the IPMG Device from an Open Position (1512A Cabinet with 800 A IPMG)

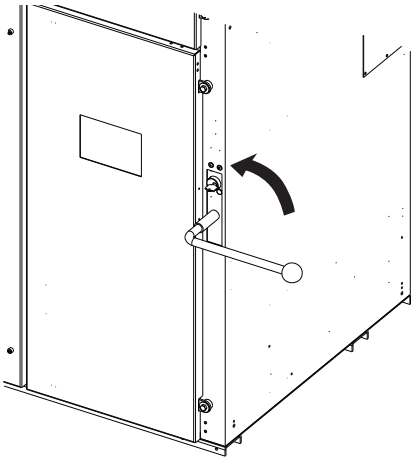

Opening the IPMG Device from a Closed Position

1. Insert the operating handle and hex shaft, through the hole in the front of the structure. Place the handle to accommodate at least 180° of clockwise motion. The hexagon-shaped shaft must mate with the connection of the IPMG operating shaft.
2. Rotate the operating handle, in one motion, approximately 180° clockwise until the switch flips into an OPEN position (there is a significant sound as the IPMG device disengages).
3. Remove the handle.
4. Verify the OPEN position of the IPMG device by viewing the blades position through the standard viewing window.

IPMG Positioning Indicators

In compliance with many safety standards, such as NFPA 70E, the position of the IPMG device is seen through a standard viewing window. The Lexan viewing window is on the lower half of the main medium voltage power cell door. The switch is in the CLOSED or GROUNDED position when the blades are in a vertical position. If the blades are not readily visible and/or if they are in a more horizontal position, the IPMG device is in the OPEN position.

There is a secondary position indicator where the operating handle is used. The graphic below details the location of the indicator that shows you what position the IPMG device is in.

Secondary Position Indicator

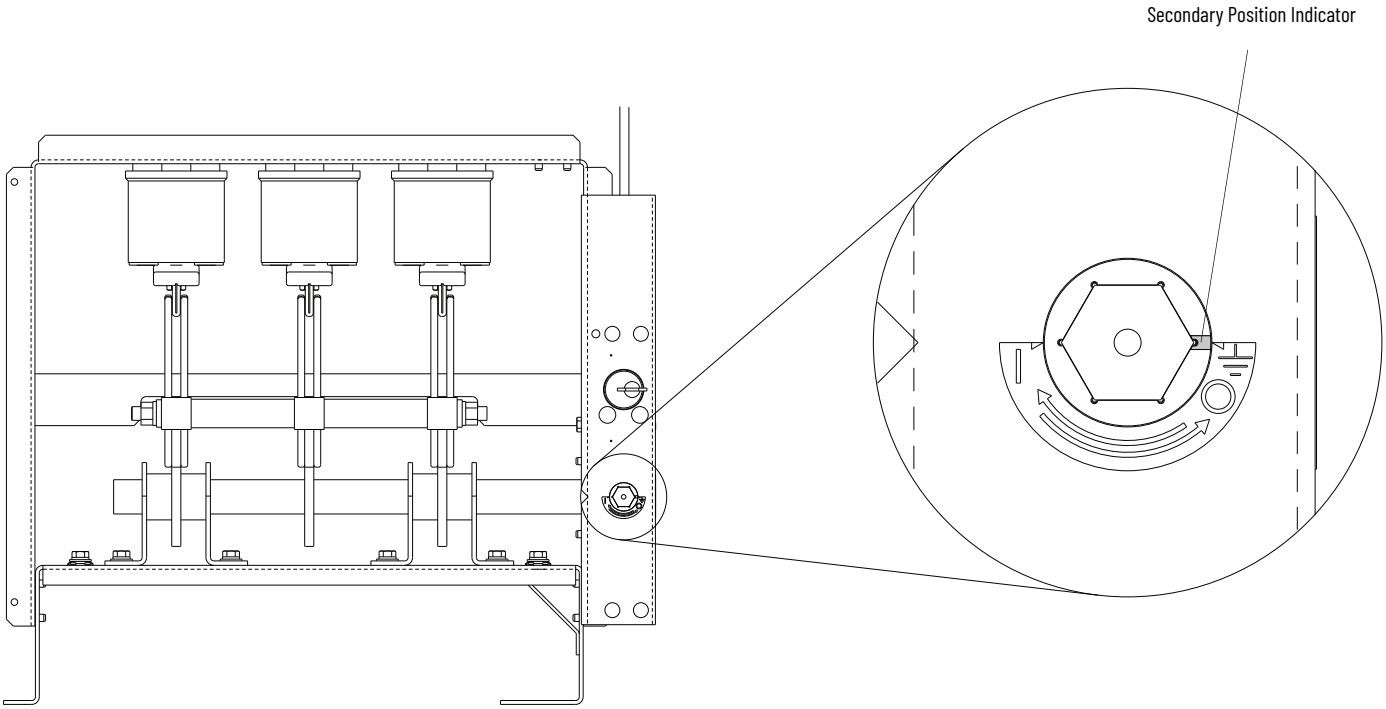

Key Interlocking

An optional mechanical key interlock is available to lock the IPMG device in the CLOSE or OPEN positions. Contact the factory for further details.

Auxiliary Switches

The IPMG device comes standard with either 2-Form C auxiliary contacts or with an optional 4-Form C auxiliary contact configuration. These auxiliary contacts indicate the mechanical and electrical position of the IPMG device. OPEN (ungrounded load connections) or CLOSED (grounded load connections). These auxiliary switches can be incorporated into the controller's control circuit. Their electrical ratings are shown Table 3 on page 85.

800 A IPMG showing Auxiliary Contact

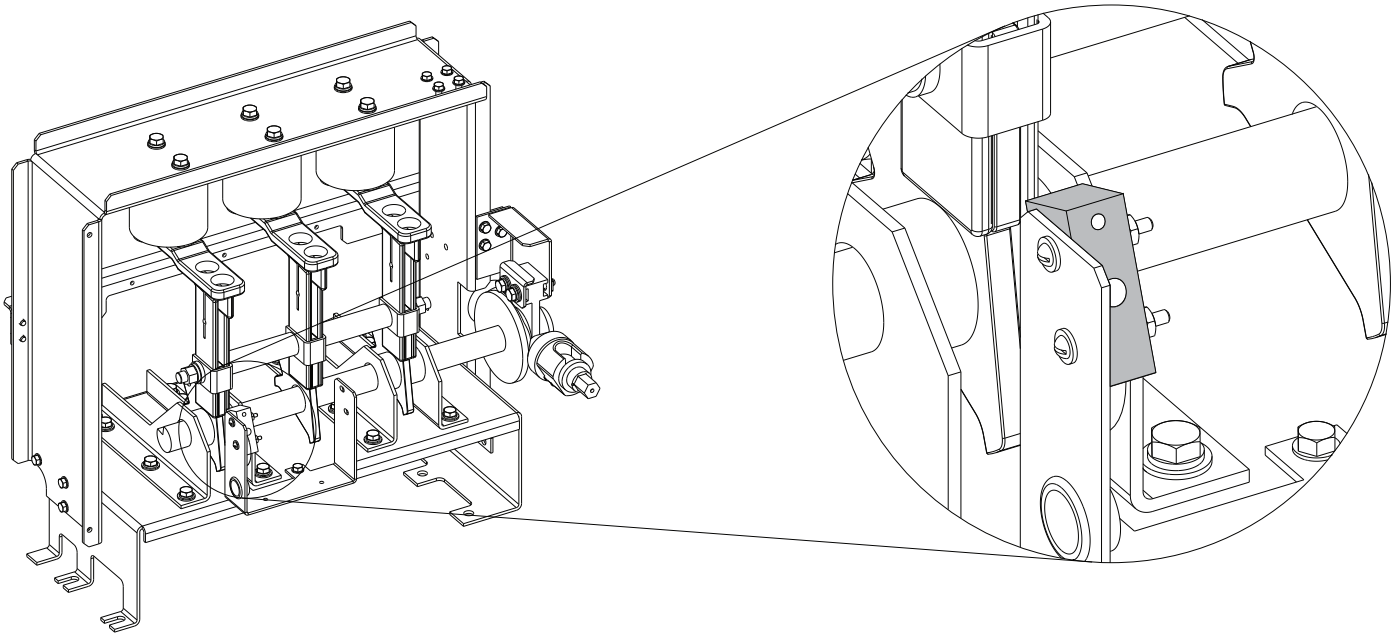

Table 3 - Auxiliary Switch Specifications

Description		Value
Rated voltage (V AC/V DC)		250
Maximum continuous current (A)		10
Contact configuration		DPDT
Contacts available (standard)		2-Form C
Contacts available (optional)		4-Form C
Breaking capacity >5000 electrical operations[1] (A)	110/120V AC	10
	220/240V AC	10
	125V DC	0.3
	250V DC	0.15
UL code		L59
Mechanical life (operations)		3,000,000

(1) When time constant is < 40 ms.

The auxiliary contacts are factory adjusted and should not require readjustment in the field. The electrical configuration of the auxiliary contacts is shown below.

Standard, 2- Form C Auxiliary Contact Configuration

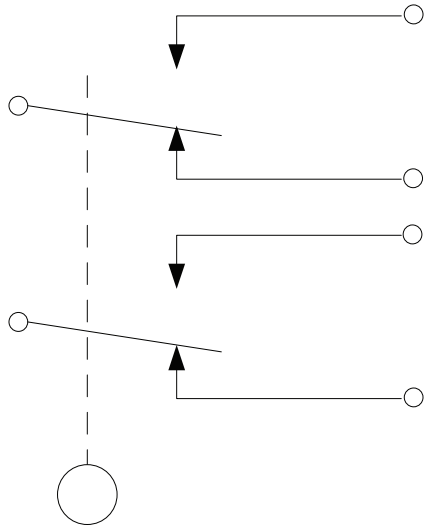

IPMG Specifications

Specifications

Description	Rating
Maximum operating voltage	7.2 kV (±5%)
Operating frequency	50/60 Hz
Rate impulse voltage withstand (BIL)(1)	60 kV
Rate 1-second voltage withstand	22 kV
Rate 1-minute voltage withstand	20 kV
Rated short time withstand current	31.5 kA rms
Short time withstand duration	4 s
Rate peak current	80 kA rms
Mechanical duration grade	M1
Mechanical endurance (operations)	2000
Torsional strength	1600 N
Mean time to failure (MTTF)	>20 years
Clearance between open contacts	>125 mm (4.9 in.)
Contact pressure	400±30 N
Movable blade and ground electrode center-center distance	116.5 mm (4.6 in.)
Approximate handling close operation force (<1°)	≤250 N
Approximate handling open operation force (<1°)	≤250 N
Approximate handling close operation force (<15°)	≤450 N
Approximate handling open operation force (<15°)	≤450 N
Loop resistance	≤75 μΩ
Method of operation	Rotational, snap action
Rotational degrees for change of state	90º ±5
Maximum difference between all three-phase closing	≤3 mm (0.12 in.)
Quantity of mounting holes	8
Mounting hole (slotted) diameter	9 x 18 mm (0.4 x 0.7 in.)

(1) The wave-shape must be 1.2/50 μs similar to those as defined in IEC 60060-1 and UL 347.

Maintenance

The IPMG device is virtually maintenance free. All contacts are lubricated in the factory at the time of shipment. General annual inspections should include that the main drive line operates smoothly and does not stick or bind due to possible misalignment that is caused by the mechanical interlocks and interfacing to the main contactor and isolation switch. The grounding (earthing) process is achieved through the movable blades and the fixed terminal points within the frame of the IPMG device. Verify that these connections are intact and that the flexible grounding conductors, are attached to the common shaft of the IPMG device, and are not broken, distressed, or frayed.

Spare Parts

Spare Parts

Part	Part No.
Replacement auxiliary switch (two form C contacts)	PN-125139
Operating handle	PN-612406
Nyogel 759G contact lubricant	80158-357-51

Notes:

History of Changes

This appendix contains the new or updated information for each revision of this publication. These lists include substantive updates only and are not intended to reflect all changes. Translated versions are not always available for each revision.

1512A-UM102C-EN-P, November 2015

Topic
Changed description for 1512DM and 1512M Bulletin Numbers
Modified figure Typical Structure Nameplate.
Modified figure Typical Unit Nameplate.
Modified figure Access to Power Bus from Side and Rear Cabinet Typical.
Modified information in Figure 14 for current transformer.
Modified figure Access to Low Voltage Compartments, Arc Resistant.
Added steps to Opening the Medium Voltage Door.
Added All MV doors must be securely bolted closed before the ArcShield latch handles are rotated.
Added Important table.
Added Important table.
Added figures Low Voltage Panel, Access to Power Bus with Low Voltage Panel Rotated, Removal Of Access Panel with Low Voltage panel Rotated, Removal of Low Voltage Barriers, and Power Bus with Bottom Access Barrier Removed.
Modified Access Power Bus Front Access - Top Entry procedure.
Added Typical Ground Bus Splicing Configuration (Front View) illustration.
Modified Important table.
Added Attention table.
Modified figures Door Interlock Lever, Inspecting Isolation Switch in Open position, Contactor Voltage Checkpoints, Isolation Switch Voltage, Removing the Contactor Front View), Closing Contactor Manually (some parts not shown), Isolation Switch Lubrication Points, Isolation Switch Grounding Adjustment, Location of ISa and ISb Auxiliary Contacts, Adjusting Auxilary Contacts (ISa Auxiliary Contacts shown).
Added part numbers 80178-750-51, 80158-147-52, PN-272006.
Increased the unit quantity of PN-272006
Added 50 kA to ArcShield™ Unit Information.
Added Attention and Warning Tables.
Added Attention and Warning Tables.

Notes:

Additional Resources

These documents contain additional information concerning related products from Rockwell Automation.

Resource	Description
Medium Voltage Contactor 800 A, 2400...7200V (Series F) User Manual, publication 1502-UM054	Provides information on handling, installing, maintaining, and troubleshooting 800 A medium voltage contactors.
EtherNet/IP Network Devices User Manual, ENET-UM006	Describes how to configure and use EtherNet/IP devices to communicate on the EtherNet/IP network.
Ethernet Reference Manual, ENET-RM002	Describes basic Ethernet concepts, infrastructure components, and infrastructure features.
System Security Design Guidelines Reference Manual, SECURE-RM001	Provides guidance on how to conduct security assessments, implement Rockwell Automation products in a secure system, harden the control system, manage user access, and dispose of equipment.
Industrial Components Preventive Maintenance, Enclosures, and Contact Ratings Specifications, publication IC-TD002	Provides a quick reference tool for Allen-Bradley industrial automation controls and assemblies.
Safety Guidelines for the Application, Installation, and Maintenance of Solid-state Control, publication SGI-1.1	Designed to harmonize with NEMA Standards Publication No. ICS 1.1-1987 and provides general guidelines for the application, installation, and maintenance of solid-state control in the form of individual devices or packaged assemblies incorporating solid-state components.
Industrial Automation Wiring and Grounding Guidelines, publication 1770-4.1	Provides general guidelines for installing a Rockwell Automation industrial system.
Product Certifications website, rok.auto/certifications.	Provides declarations of conformity, certificates, and other certification details.

You can view or download publications at rok.auto/literature.

Rockwell Automation Support

Use these resources to access support information.

Technical Support Center	Find help with how-to videos, FAQs, chat, user forums, and product notification updates.	rok.auto/support
Knowledgebase	Access Knowledgebase articles.	rok.auto/knowledgebase
Local Technical Support Phone Numbers	Locate the telephone number for your country.	rok.auto/phonesupport
Literature Library	Find installation instructions, manuals, brochures, and technical data publications.	rok.auto/literature
Product Compatibility and Download Center (PCDC)	Download firmware, associated files (such as AOP, EDS, and DTM), and access product release notes.	rok.auto/pcdc

Documentation Feedback

Your comments help us serve your documentation needs better. If you have any suggestions on how to improve our content, complete the form at rok.auto/docfeedback.

Waste Electrical and Electronic Equipment (WEEE)

At the end of life, this equipment should be collected separately from any unsorted municipal waste.

Rockwell Automation maintains current product environmental information on its website at rok.auto/pec.

Rockwell Otomasyon Ticaret A.Ş. Kar Plaza İş Merkezi E Blok Kat:6 34752, İçerenköy, İstanbul, Tel: +90 (216) 5698400 EEE YÖnetmeliğine Uygundur

Connect with us.

rockwellautomation.com — expanding **human possibility**™

AMERICAS: Rockwell Automation, 1201 South Second Street, Milwaukee, WI 53204-2496 USA, Tel: (1) 414.382.2000, Fax: (1) 414.382.4444
EUROPE/MIDDLE EAST/AFRICA: Rockwell Automation NV, Pegasus Park, De Kleetlaan 12a, 1831 Diegem, Belgium, Tel: (32) 2 663 0600, Fax: (32) 2 663 0640
ASIA PACIFIC: Rockwell Automation, Level 14, Core F, Cyberport 3, 100 Cyberport Road, Hong Kong, Tel: (852) 2887 4788, Fax: (852) 2508 1846

Publication 1512A-UM102D-EN-P - August 2021
Supersedes Publication 1512A-UM102C-EN-P - November 2015