User Manual

Original Instructions

Allen-Bradley

Medium Voltage 400A Contactor - Series E and F

Catalog Number 1502

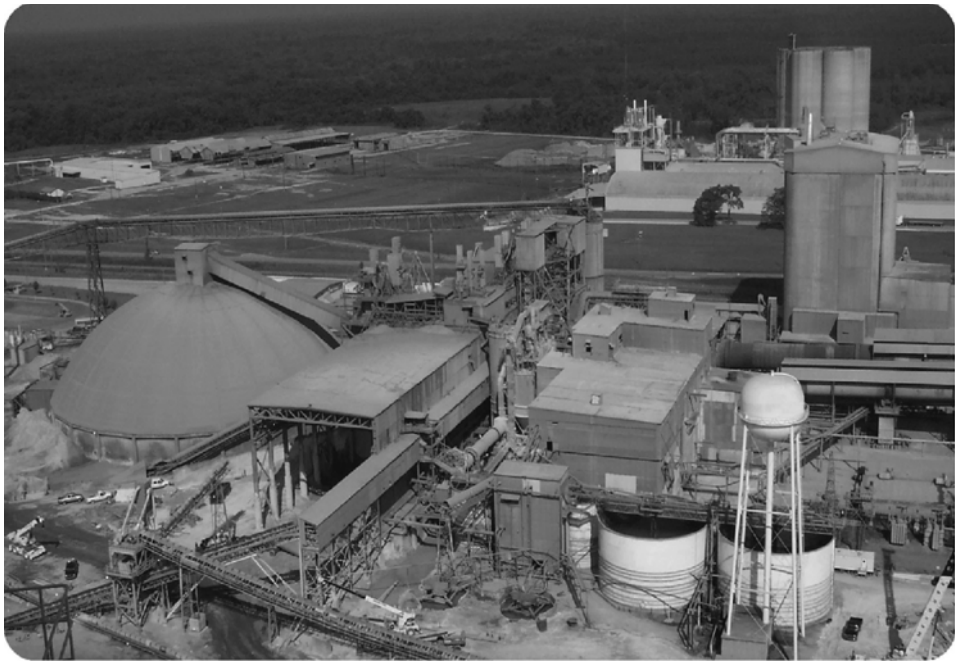

Allen-Bradley • Rockwell Software

Rockwell Automation

Important User Information

Read this document and the documents listed in the additional resources section about installation, configuration, and operation of this equipment before you install, configure, operate, or maintain this product. Users are required to familiarize themselves with installation and wiring instructions in addition to requirements of all applicable codes, laws, and standards.

Activities including installation, adjustments, putting into service, use, assembly, disassembly, and maintenance are required to be carried out by suitably trained personnel in accordance with applicable code of practice.

If this equipment is used in a manner not specified by the manufacturer, the protection provided by the equipment may be impaired.

In no event will Rockwell Automation, Inc. be responsible or liable for indirect or consequential damages resulting from the use or application of this equipment.

The examples and diagrams in this manual are included solely for illustrative purposes. Because of the many variables and requirements associated with any particular installation, Rockwell Automation, Inc. cannot assume responsibility or liability for actual use based on the examples and diagrams.

No patent liability is assumed by Rockwell Automation, Inc. with respect to use of information, circuits, equipment, or software described in this manual.

Throughout this manual, when necessary, we use notes to make you aware of safety considerations.

	WARNING: Identifies information about practices or circumstances that can cause an explosion in a hazardous environment, which may lead to personal injury or death, property damage, or economic loss.
	ATTENTION: Identifies information about practices or circumstances that can lead to personal injury or death, property damage, or economic loss. Attentions help you identify a hazard, avoid a hazard, and recognize the consequence.
IMPORTANT	Identifies information that is critical for successful application and understanding of the product.

Labels may also be on or inside the equipment to provide specific precautions.

	SHOCK HAZARD: Labels may be on or inside the equipment, for example, a drive or motor, to alert people that dangerous voltage may be present.
	BURN HAZARD: Labels may be on or inside the equipment, for example, a drive or motor, to alert people that surfaces may reach dangerous temperatures.
	ARC FLASH HAZARD: Labels may be on or inside the equipment, for example, a motor control center, to alert people to potential Arc Flash. Arc Flash will cause severe injury or death. Wear proper Personal Protective Equipment (PPE). Follow ALL Regulatory requirements for safe work practices and for Personal Protective Equipment (PPE).

Preface

Summary of Changes 5
About This Publication 5
What This Manual Contains 5
Additional Resources 6

Product Description

Chapter 1

Contactor Description 7
Series Letter Details 7
Vacuum Bottle Description 8
Electrically Held Contactor Operation 9
IntelliVAC and IntelliVAC Plus Controlled Contactors 9
Electromechanical Relay Controlled Contactors 9
Mechanically Latched Contactor Operation 10
IntelliVAC and IntelliVAC Plus Controlled Contactor 10
Electromechanical Relay Controlled Contactor 10
Contactor Identification 11
Catalog Number Explanation 12
Contactor Dropout Times 12
Specifications 13
Product Approvals 16

Receiving and Handling

Chapter 2

Receiving 17
Preliminary Inspection 17
Handling 17
Pre-energization Inspection 18
Storage 18
Vacuum Bottle Integrity Test 18
Insulation Resistance Test 20

Installation

Chapter 3

Mounting 21
Electrical Connections 22
Wiring and Schematic Diagrams 24

Maintenance

Chapter 4

Tool Requirements 35
Recommended Torque Values 36
Routine Maintenance 36
Cleaning 36
Main Contact Inspection 37
HiPot and Insulation Resistance Test 37
Lubrication 37

Vacuum Bottle Replacement 38
Coil Replacement Procedure 38
Auxiliary Contact Setup Procedure 40
Mechanically Latched Contactor Trip Coil Replacement Procedure 44
Parts. 44
Procedure. 44
Mechanically Latched Contactor Setup Procedure 48
Altitude Adjustment 50

Chapter 5

Troubleshooting

Troubleshooting and Contactor Coil Resistance 51

Chapter 6

Spare Parts

Bulletin 1502 Spare Parts Diagrams and Chart. 53

Index 55

Summary of Changes

This table contains the changes made to this revision.

Topic	Page
Updated procedure for replacing the vacuum bottles	38

About This Publication

This manual pertains to the Allen-Bradley® Bulletin 1502, Series E and F version 400 A vacuum contactors. For earlier product series letters, contact your local Rockwell Automation representative.

Series E and F vacuum contactors are intended for use with electromechanical (relay) control circuits and with IntelliVAC™ and IntelliVAC™ Plus control modules. See publications 1503-UM053 and 1503-UM054 respectively.

This manual is intended for engineers or technicians that are directly involved in the installation, connection, energizing, and maintenance of the Medium Voltage 400 A Contactor.

What This Manual Contains

This manual contains the following sections:

- Contactor description, including dropout times and specifications
- Information on how to receive, handle, and store the contactor
- How to mount the contactor, which includes typical electrical and wiring diagrams
- Tools that are required to maintain the contactor, recommended torque values, and how to perform routine maintenance tasks
- Troubleshooting section that outlines symptoms, possible causes, and how to remedy them
- Spare Parts list

Additional Resources

These documents contain additional information concerning related products from Rockwell Automation.

Resource	Description
Medium Voltage Controllers, 400A One-High Cabinet, Standard and Arc-Resistant Enclosure, publication 1512A-UM100	Provides information on installation, maintenance, and spare parts for standard and arc resistant enclosures
Medium Voltage Controllers, 200/400A Two-High Cabinet, Standard and Arc-Resistant Enclosure, publication 1500-UM055	Provides information on installation, maintenance, and spare parts for standard and arc resistant enclosures
IntelliVAC Contactor Control Module User Manual, publication 1503-UM053	Provides information on receiving and storage, installation, setup, monitoring, and spare parts for the IntelliVAC Contactor Control Module
IntelliVAC Plus Contactor Control Module User Manual, publication 1503-UM054	Provides information on receiving and storage, installation, wiring, programming, and troubleshooting for the IntelliVAC Plus Contactor Control Module
Industrial Automation Wiring and Grounding Guidelines, publication 1770-4.1	Provides general guidelines for installing a Rockwell Automation industrial system.
Product Certifications website, http://www.rockwellautomation.com/global/certification/overview.page	Provides declarations of conformity, certificates, and other certification details.

You can view or download publications at http://www.rockwellautomation.com/global/literature-library/overview.page. To order paper copies of technical documentation, contact your local Allen-Bradley distributor or Rockwell Automation sales representative.

Product Description

Contactor Description

The Allen-Bradley® Bulletin 1502 400 A vacuum contactors are designed for applications in the 2400...7200V AC range. The contactor is suitable for all types of loads, for example: three-phase motors, transformers, power capacitors, and resistive heat loads.

The contactor uses three interrupters (referred to as vacuum bottles) operated by an electromagnet assembly through a mechanical linkage. They are resistant to most adverse atmospheric conditions and provide long mechanical and electrical life.

The contactors are used in various motor control and drive configurations, such as full-voltage non-reversing, full-voltage reversing, two-speed, reduced voltage, synchronous, drive input/output, and bypass applications. They are fixed-mounted within the structures and the line and load terminations are made at the rear of the device. In most configurations, the main contactor is mechanically interlocked with the external operating handle and isolation switch.

Bulletin 1502 vacuum contactors are designed for use with the IntelliVAC™ and IntelliVAC™ Plus control modules (see publications 1503-UM053 and 1503-UM054). Certain contactor models are configured for use with electromechanical (relay) control panels. There are physical differences between contactors that are designed for IntelliVAC and IntelliVAC Plus control versus those intended to be operated using electromechanical relay controls (see Catalog Number Explanation on page 12).

Series Letter Details

The series letter of the Bulletin 1502 contactor is shown on the label that is located on the front of the armature plate (Figure 4). The catalog number, along with the series letter, define the product's electrical and mechanical configuration. This information must be used to select the appropriate repair or replacement parts.

Electromechanical relay controlled, electrically held contactors moved from Series D to Series E with the inclusion of mechanical vacuum bottle braces.

Electromechanical relay controlled, mechanical-latch contactors were moved from Series E to Series F with the inclusion of mechanical vacuum bottle braces.

IntelliVAC and IntelliVAC Plus controlled electrically held and mechanically latched contactors were moved from Series E to Series F with the inclusion of mechanical vacuum bottle braces.

Figure 1 - 400 A Contactor

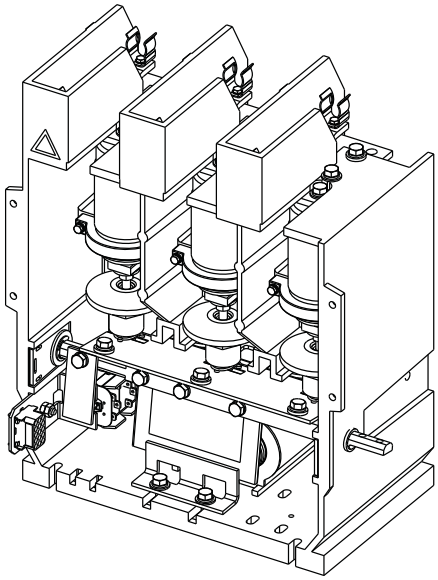

Vacuum Bottle Description

Each vacuum bottle (Figure 2) consists of two contacts that are enclosed in a ceramic housing: an upper contact that is mounted to a fixed shaft, and a lower contact that is mounted to a movable shaft. A stainless steel bellow helps the vacuum integrity of the bottle, while letting the lower contact move towards and away from the fixed contact.

Figure 2 - Vacuum Bottle Cross Section

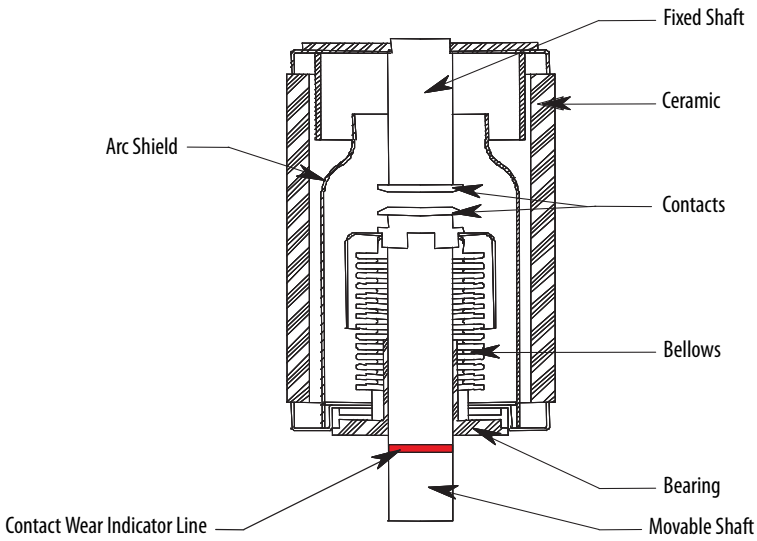

Electrically Held Contactor Operation

IntelliVAC and IntelliVAC Plus Controlled Contactors

The electrically held contactor consists of three vacuum bottles. An electromagnet assembly and a mechanical linkage are used to close the contacts.

- When the IntelliVAC or IntelliVAC Plus control module receives a close command, the contactor coils (two connected in series) are energized, and the current creates an electromagnet with the coils.
- The electromagnet pulls the armature plate towards the core of the coils, which rotates the shaft and causes the actuator plate to move upwards.
- As the actuator plate moves, it pushes the insulator and each vacuum interrupter's movable shaft up, which closes the contacts in the vacuum bottle.
- The IntelliVAC or IntelliVAC Plus control module supplies the current required to close the coils for approximately 200 milliseconds. Afterward, the coil current is reduced to a lower hold-in value.
- When the close command is removed from the IntelliVAC or IntelliVAC Plus control module (Open), the coils are de-energized, which opens the contactor.

Electromechanical Relay Controlled Contactors

When the main pilot relay (CR1) in the control circuit is energized, the circuit energizes an electromagnet in the closing coil and in the hold-in coil (Figure 18). The electromagnet pulls the armature plate towards the core of the coils, which rotates the shaft and causes the actuator plate to move upwards.

As the actuator plate moves, it pushes the insulator and each vacuum interrupter's movable shaft up, which closes the contacts in the vacuum bottle. The control circuit economizing auxiliary contacts, on the left side of the contactor, change from the normally closed state to the normally open state as the contactor closes, which de-energizes the closing coil.

The hold-in coil remains energized and keeps the contactor closed. De-energizing the hold-in coil opens the contactor.

IMPORTANT The standard electrically held contactor requires an external 120V AC or 240V AC control relay and rectification circuit to control the standard DC closing and hold-in coils on the contactor (see Figure 19).

Figure 3 - Electrically Held Vacuum Contactor Operation

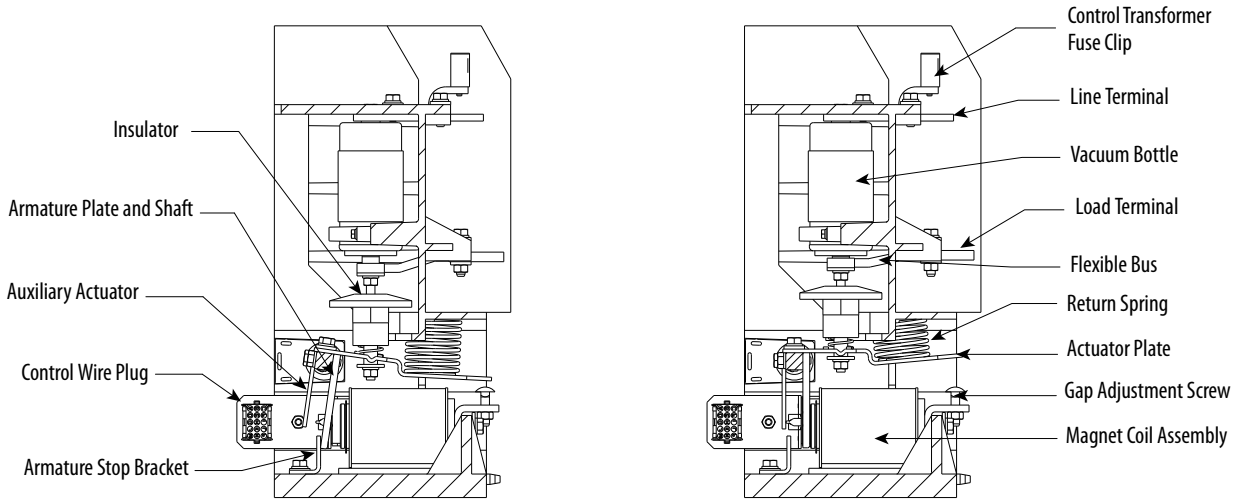

Mechanically Latched Contactor Operation

The mechanically latched contactor operates in much the same way as the electrically held (Figure 3) with only a few exceptions.

IntelliVAC and IntelliVAC Plus Controlled Contactor

- Once the contactor is fully closed, a spring-loaded mechanism moves a roller against the armature plate to hold it against the electromagnetic core.
- The contactor can be opened electrically by energizing a trip coil (via IntelliVAC or IntelliVAC Plus 'open' [TCO] output) which pulls the latch away from the armature, or by a push button that mechanically releases the contactor. The push button is mounted on the power cell door.

Electromechanical Relay Controlled Contactor

- Once the contactor is fully closed, a spring-loaded mechanism moves a roller against the armature plate to hold it against the electromagnetic core.
- The control circuit auxiliary contact, on the left side of the contactor, changes from the normally closed state to the normally open state as the contactor closes. This action de-energizes the relay that controls the closing coils (see Figure 18).
- The contactor can be opened electrically by energizing a trip coil that pulls the latch away from the armature, or by a push button that mechanically releases the contactor. The push button is mounted on the power cell door.

The electromechanical relay controlled mechanical latch contactor requires external 120V AC or 230V AC control relays and rectification circuit to control the standard DC closing and trip coils on the contactor (when IntelliVAC or IntelliVAC Plus is not used). See Figure 19.

WARNING: The Rockwell Automation® relay control panel (1503C-XXX or 1503E-CXXX) is required for reliable operation of the contactor within its published specifications. The relays break the DC current that is drawn by the closing coil, holding coil, and trip coil. The relays make sure the pick-up and drop out voltages are coordinated with the pick-up and drop out voltages of the contactor. This provides reliable operation of the circuit in undervoltage conditions. The use of alternative control relays is not supported or recommended. Alternative relays do not provide the necessary control timings necessary to provide reliable operation and coordination with all power fuses used in combination with the contactors.

Contactor Identification

Each contactor is identified with a rating label (Figure 4) attached to the armature plate at the front of the contactor. The rating label information includes the Catalog Number (Cat.) Series Letter (Ser.) Voltage Rating, Non-Enclosed Current Rating, Interrupting Capacity, Altitude Range (in meters), CSA, UL, and CE markings.

Figure 4 - Contactor Rating Label (400 A)

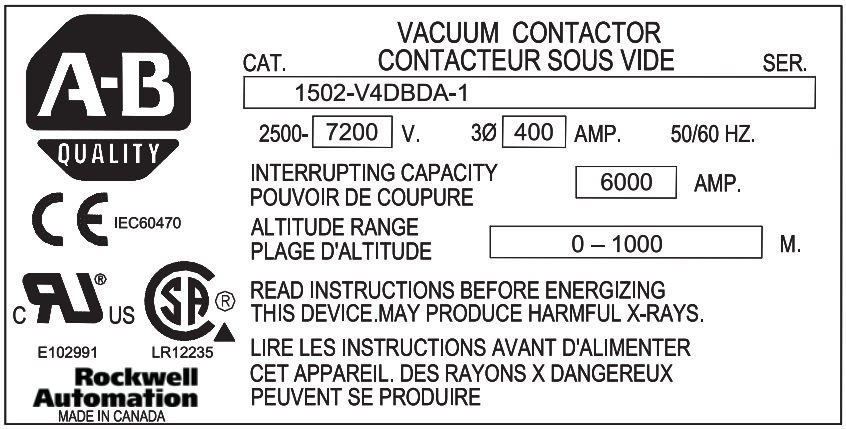

Catalog Number Explanation

The following catalog number explanation is used to identify the contactor and must be used when contacting your local Rockwell Automation sales office for assistance.

Position

	1	2	3	4	5	6	7
1502 –	**V**	**4**	**D**	**B**	**D**	**A**	**–___**
	a	*b*	*c*	*d*	*e*	*f*	*g*

a

Contactor Type and Interlock	
V	Vacuum, electromechanical relay controlled
VC	Vacuum, optimized for IntelliVAC control

b

Contactor Size	
4	400 A

c

Nominal Line Voltage	
D	7200V

d

Control Circuit or Voltage Transformer Primary Fuse Mounting Provisions	
B	5000V
C	7200V

e

Coil Voltage	
D	110V DC
E	207V DC

f

Function	
A	3-pole, electrically held contactor
B	3-pole, mechanically latched contactor with electrical and mechanical release
C	3-pole, electrically held contactor with fast drop-out(1)

(1) Controlled by electromechanical relay.

g

Altitude Code (m)	
0	-1000…5000(1)
1	0…1000
2	1001…2000
3	2001…3000
4	3001…4000
5	4001…5000

(1) Only with VC contactor type (Position 1 in Catalog Number).

Contactor Dropout Times

The IntelliVAC or IntelliVAC Plus contactor control module (publications 1503-UM053 and 1503-UM054) varies the speed at which the electrically held vacuum contactor opens.

When electromechanical relays are used to control the electrically held contactor, there are two speeds available: normal dropout time and fast dropout time. The opening speed is controlled by changes to the onboard contactor control circuity (see Figure 13 through Figure 16).

Contactors that are configured for faster dropout times are used for specific applications if faster uncoordinated action is required.

Contactors with normal dropout times must be used in coordination with medium voltage power fuses. The dropout time must be longer than the Total Clearing Time of the medium voltage power fuses being applied in combination with the vacuum contactor. Damage to the contactor can occur if this coordination is not addressed appropriately.

All mechanically latched contactors are designed with the fast dropout time.

Specifications

Table 1 - Voltage Rating(1)

Maximum Rated Voltage		7200
System Voltages		2400, 3300, 4160, 4800, 6600, 6900
Dielectric Voltage Withstand Rating	For 60 seconds (kV)	18.2/20 (IEC)
Basic Impulse Level (B.I.L.) Withstand	Phase to Ground, Phase to Phase (kV)	60
Frequency Ratings	Hertz	50/60

(1) The voltage ratings listed are valid up to 1000 m (3300 ft). See Table 8 for ratings above this altitude.

Table 2 - Current Ratings(1)

Rated Continuous Current (A)		400
Maximum interrupting current rating	2400V (RMS Sym A)	6000
	5000V (RMS Sym A)	6000
	7200V (RMS Sym A)(2)	6000
Maximum interrupting MVA rating	2400V (Sym MVA)	25
	5000V (Sym MVA)	50
	7200V (Sym MVA)(2)	75
Short circuit withstand at rated voltage	Current Peak ½ cycle (kA)	55
Short time current rating capability	For 1 second (kA)	6.0
	For 30 seconds (kA)	2.4
Chop current (average rms amperes)		0.5
Make and Break Capability at Rated Voltage (kA)		4.0
Ambient Temperature	°C	40

(1) The current ratings that are listed are valid up to 1000 m (3300 ft). See Table 8 for ratings above this altitude.
(2) The IEC rating at 7200V (RMS Sym.) is 5300 A / 66 MVA.

Table 3 - Contactor Coil Data

Control Voltage (V_{CTL})	Coil Voltage (V_{CL})		
Electromechanical Relay Controlled (Mechanical Latch)			
120V AC	110V DC	Close current inrush (A_{DC})	5.6
		Pilot Relay (CR1) pick-up voltage	102
		Minimum trip coil voltage (VAC)	84
		Trip coil current (A)	6
Electromechanical Relay Controlled (Electrically Held)			
120V AC	110V DC	Close current inrush (A_{DC})	7.3
		Economized holding current (A_{DC})	0.13
		Minimum CR1 coil pick-up voltage (VAC)	102
		CR1 coil drop-out voltage (VAC)	75
Electromechanical Relay Controlled (Mechanical Latch)			
230V AC	210V DC	Not available at this control voltage	
Electromechanical Relay Controlled (Electrically Held)			
230V AC	210V DC	Close current inrush (A_{DC})	8.3
		Economized holding current (A_{DC})	0.11
		Minimum CR1 coil pick-up voltage (V AC)	190
		CR1 coil drop-out voltage (V AC)	140
IntelliVAC and IntelliVAC Plus Control (Electrically Held & Mechanical Latch)			
110…240V AC or 110…250V DC (1)	V AC: $V_{CL} = \sqrt{2} \times V_{CTL}$ (max.) V DC: $V_{CL} = V_{CTL}$	Close current (A_{DC}, 200 milliseconds)	4.3
		Hold current (A_{DC})	0.48
		Pick-up voltage(1)	95
		Drop-out voltage(1)	75
		Trip current (A_{DC}, 200 milliseconds)	5.5
		Trip voltage(1)	70

(1) Control voltage, as measured at the input of the IntelliVAC or IntelliVAC Plus control module or the primary voltage to the pilot relay control circuit.

Table 4 - Operational Characteristics

Mechanical life (operations) x 1000 (1)	Electrically held	2500
	Mechanical latch	100
Electrical life (operations) x 1000(1)		1000
Switching frequency (operations per hour)	Electrically held	600
	Mechanical latch	150

(1) Provided that regular maintenance is performed, as detailed in this manual.

Table 5 - Opening and Closing Times

Electromechanical (Relay) Controlled		
Maximum closing time (120V AC)(1)	50 Hz or 60 Hz (ms)	160
Maximum opening time (120V AC)(2)	50 Hz or 60 Hz (ms)	50
Maximum opening time (120V AC)(3)	50 Hz or 60 Hz (ms)	160
IntelliVAC and IntelliVAC Plus Control (Electrically Held & Mechanical Latch)		
Maximum closing time (50…60 Hz)	120 / 240V AC (ms)	100/70
Maximum opening time (without delay, for 50…60 Hz)(4)	120 / 240V AC (ms)	60

(1) Control/Pilot relay, other than the standard Rockwell Automation Control Panel assembly (1503C-E4_ or 1503C-M4D), must provide a constant closing signal for at least this period of time. The use of control components other than Rockwell Automation products is not recommended and may pose reliability concerns.

(2) Mechanical latched.

(3) Electrically held, normal dropout.

(4) A contactor drop-out delay may be configured with the IntelliVAC or IntelliVAC Plus control module (refer to publications 1503-UM053 and 1503-UM054).

Table 6 - Capacitor Switching (max. kVAR)

System Voltage	2400V	800
	4160V	1400
	6900V	2000

Table 7 - General

Standard Altitude Capability (1) (2)	-1000…5000 m (3300…16,500 ft)
Contactor Weight	21.8 kg (48 lb)
Auxiliary Contact Rating	A600
Auxiliary Contacts on the Vacuum Contactor (max.)(3)	3 N.O., 3 N. C.

(1) The voltage and current ratings that are listed are valid up to 1000 m (3300 ft). See Table 8 for ratings above this altitude.

(2) The full altitude range is available with the IntelliVAC or IntelliVAC Plus control module only, and the IntelliVAC or IntelliVAC Plus is to be configured accordingly (refer to publications 1503-UM053 and 1503-UM054). The standard mechanical latch contactors, if used with electromechanical control, are designed for -1000…1000 m (-3300…3300 ft). Higher altitudes are possible by changing the contactor return springs (refer to Catalog Number Explanation for suitable catalog numbers).

(3) The number of contactor auxiliary contacts depends on the contactor type. Some of the contacts are used in the typical control schemes used.

Table 8 - Altitude Derating

Altitude Rating	Max. Continuous Current Rating(2)	Reduce B.I.L. Withstand Rating by:
-1000…0 m (-3300…0 ft)(1)	400 A	–
0…1000 m (0…3300 ft)	400 A	–
1001…2000 m (3301…6600 ft)	390 A	6.0 kV
2001…3000 m (6601…9900 ft)	380 A	12.0 kV
3001…4000 m (9901…13,200 ft)	370 A	18.0 kV
4001…5000 m (13,201…16,500 ft)	360 A	24.0 kV

(1) Only supported with IntelliVAC or IntelliVAC Plus controlled contactors

(2) Open rating. When enclosed in a controller, see the appropriate controller manual for enclosed contactor derating values.

Product Approvals

- UL347
- CSA22.2 No. 14 and T.I.L. D-21
- IEC 60470
- CE Marked

Receiving and Handling

Receiving

The contactors have been tested both mechanically and electrically before leaving the factory. Immediately upon receiving the contactor, remove the packing material and check the contactor for possible damage from shipping. If damage is found, do not discard the packaging materials and, if possible, note the damage on the "Bill of Lading" before accepting the shipment. Report any damage immediately to the claims office of the common carrier. Provide a description of the damage and as much identification as possible.

Preliminary Inspection

Check for any cracks or breaks that were caused by impact.

Push armature plate to verify that the mechanisms are functional.

Use a HiPot tester to test vacuum bottle integrity (refer to Vacuum Bottle Integrity Test on page 18)

Handling

The contactor weighs approximately 21.8 kg (48 lb). When transporting the contactor over longer distances or for sustained lifting, use a forklift.

When a forklift is used to handle the equipment, adhere to the following precautions:

- Keep the contactor in an upright position.
- Carefully balance the contactor on the forks.
- Use a safety strap to steady the contactor and avoid shifting or being tipped.
- Avoid excessive speeds and sudden starts, stops, and turns.
- Never lift a contactor above an area where personnel are located.

Pre-energization Inspection

Before placing the contactor in service, inspect for possible damage sustained in transit or maintenance:.

- Check housing for any cracks or breaks.
- Push the armature plate and rotating shaft to verify that the mechanism is in good working order.
- Inspect the contactor for dirt, stray or loose hardware, tools, or metal chips. Vacuum if necessary.

Storage

To store the contactor before it is in service, store it in a clean, dry area, free from dust and condensation. Do not store contactor outdoors.

Storage temperature must be between -20...65 °C (-4...149 °F). If storage temperature fluctuates or if humidity exceeds 85%, use space heaters to prevent condensation.

Vacuum Bottle Integrity Test

The internal dielectric condition and vacuum integrity of the vacuum bottles is determined by this test.

ATTENTION: Do not apply a voltage higher than 25,000V across the open contacts of a vacuum bottle. Dangerous x-ray emissions can be produced.

ATTENTION: Vacuum bottles are thoroughly tested at the factory; however, damage during shipment can occur. It is important to perform the vacuum bottle integrity test before energizing the contactor for the first time, and before it is returned to service after maintenance or repair. The test may result in personal injury or damage to the equipment if the vacuum bottle integrity fails.

ATTENTION: A high-voltage test is potentially hazardous. Use caution when performing the Hi-pot test. Failure to do so may result in severe burns, injury, or death.

High-potential test instruments can be purchased to perform the vacuum bottle integrity test. An insulation resistance tester cannot be used to measure vacuum integrity because the voltage is too low. One of the following AC Hi-pot testers is recommended as a test instrument.

Manufacturer	Address
Mitsubishi Type VI #4U17	Chicago, Ill., USA
Jennings Model JHP-70A	San Jose, CA., USA
Hipotronics Model 7BT 60A	Brewster, NY, USA

1. Clean the outside of the vacuum bottles with a lint-free cloth or industrial wipe before performing the test.

2. The contactor can be tested while it is in the power cell. The line connection of the contactor must be disconnected and the ground lead from the Hi-pot tester must be connected to the load side of the contactor. Any fuses in the top of the contactor must be removed.
3. With the contactor in the open position, connect the test leads to the contactor power terminals as shown in Figure 5. It is recommended that an AC Hi-pot tester be used. Apply 16 kV for 60 seconds and monitor the leakage current. It must not exceed 5 mA. Test each vacuum bottle individually.
4. If no breakdown occurs, the vacuum bottle is in an acceptable condition. If a breakdown occurs, repeat the test once more. If the vacuum bottle fails a second time, it must be replaced. If no breakdown occurs in the second test, the vacuum bottle is in an acceptable condition.

ATTENTION: If one vacuum bottle fails, Rockwell Automation recommends replacing all three vacuum bottles, if the unit has been in service.

5. After the high potential voltage is removed from the vacuum bottles, the metal end caps of the vacuum bottles must be discharged with a grounding rod.

Figure 5 - Vacuum Bottle Integrity Test Circuit

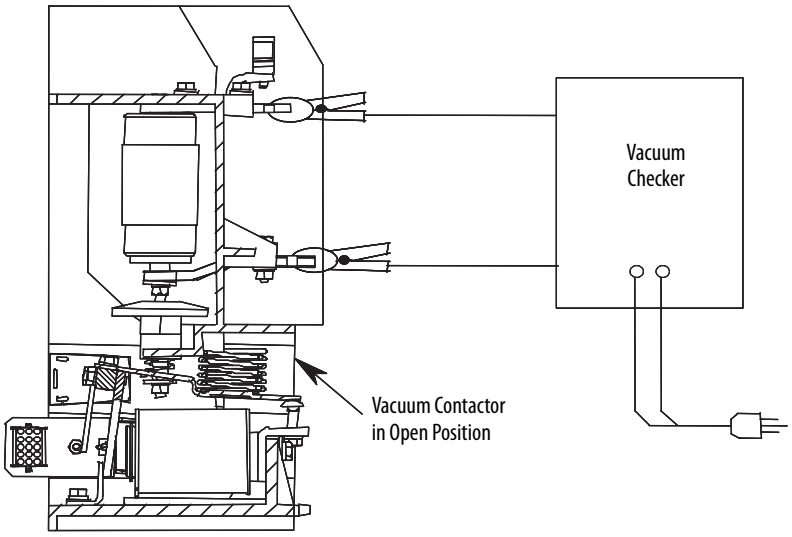

The allowable leakage current value of 5 mA is exclusive of leakage due to test equipment leads. The test setup leakage can be determined by running the dielectric test with test leads not connected to the contactor and noting the maximum leakage current. If this value is more than 2 mA, it must be added to the 5 mA limit when testing the vacuum bottles.

Rockwell Automation does not recommend a DC Hi-pot test. The values that are obtained during the test are not a reliable indication of vacuum bottle integrity. Some specific DC "GO-NO GO" testers may provide suitable "defective" readings.

A DC Hi-pot test is unreliable because of Cathode Ray Tube Effect. This phenomenon occurs when one contact of the vacuum bottle has a deformity, such as a burr or deposit, while the other contact remains flat and true. This deformity creates leakage currents, which flow from a small surface to a large surface in one direction and vice versa when the polarity of the tester is changed. The resultant current is large in one direction, which would incorrectly indicate a faulty vacuum bottle.

A DC test can verify some degree of vacuum integrity. It does not give any indication of the degree of vacuum, since the contact surface can change with each operation of the vacuum contactor. However, an AC test provides a reliable vacuum integrity indication. Additionally, the degree of vacuum within the bottle can be determined by comparing initial test results to the present readings. Increases in leakage current indicate a reduction in vacuum within the vacuum bottle.

For these reasons, Rockwell Automation recommends an AC test as the preferred method of a vacuum bottle test.

A suitable GO-NO GO DC test unit is:

Manufacturer	Address
Programma, Model VIDAR	Santa Rosa, CA, USA

Insulation Resistance Test

Use a 1000V insulation resistance tester to verify that the resistance from phase-to-phase or from phase-to-ground is greater than 500 megohms.

Installation

Mounting

The electrically held and the mechanically latched contactors are fixed-mounted in the cabinet. Two retaining tabs at the rear of the molded base can be used for mounting. The two mounting slots at the front of the molded base secure the contactor with 1/4 in. bolts. The appropriate mounting configuration is provided inside the power cells of Allen-Bradley controllers. If the contactor is supplied as an OEM component for installation in a custom application, refer to the dimensional information in Figure 6. If the contactor is mounted in an enclosure designed by an OEM, there must be a minimum of 3 in. (76 mm) of air space between live parts (terminals and vacuum bottles) and the enclosure.

Figure 6 - Contactor Mounting Details (dimensions are in inches [millimeters])

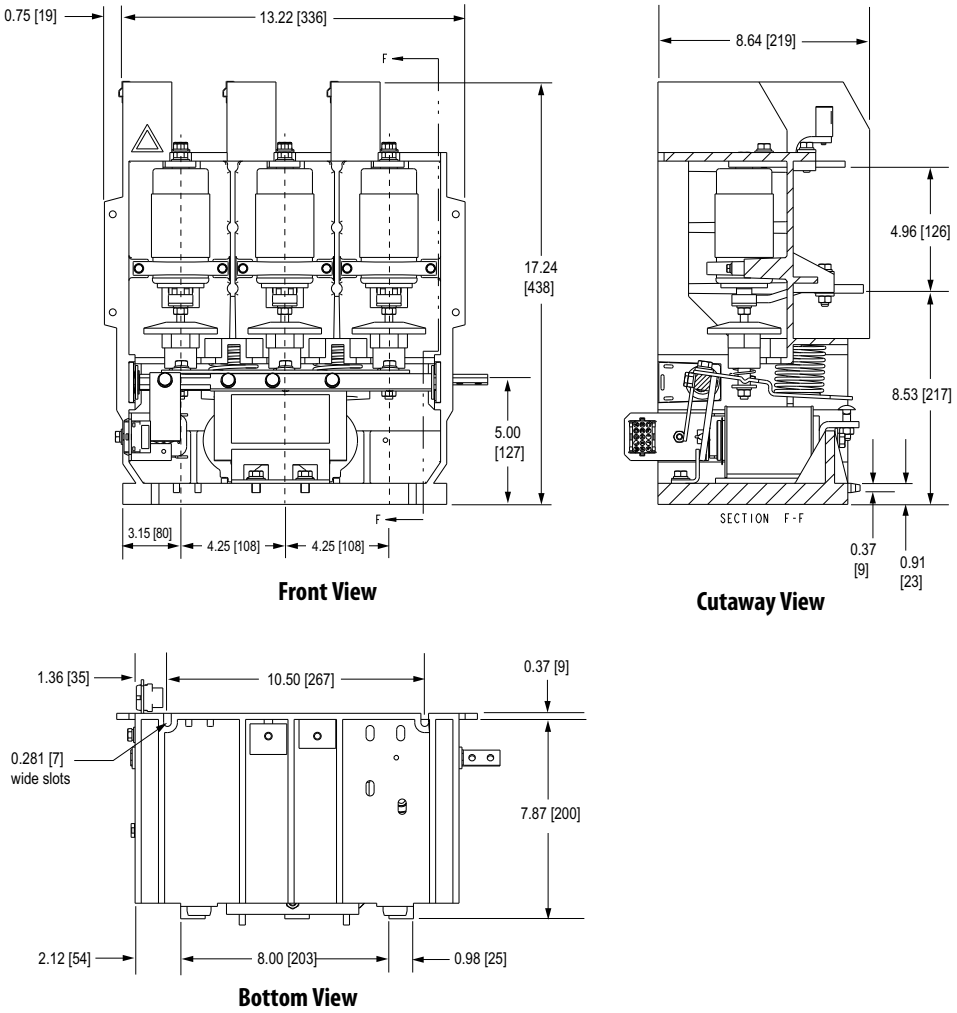

Figure 7 - Mechanical Latch Dimensions (Optional)

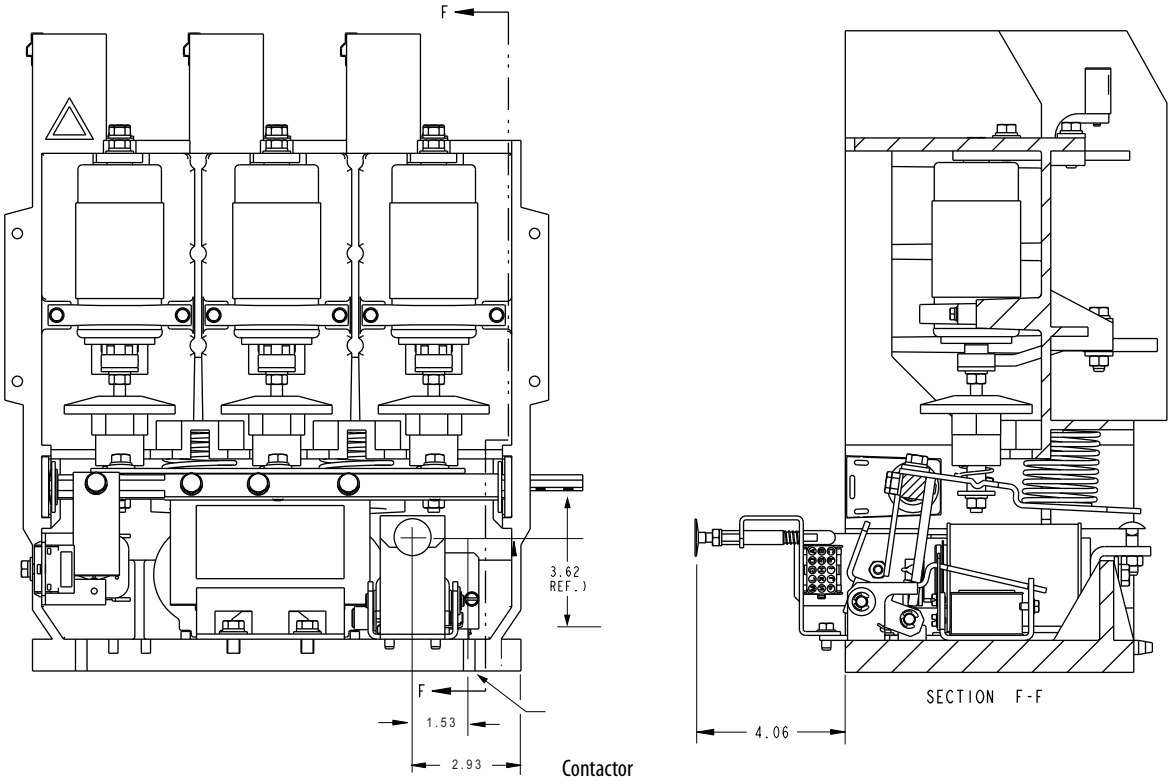

Electrical Connections

A wire harness connects the control wiring to the contactor from the low voltage control panel. The harness connects to a wire plug on the lower left side of the contactor. If the contactor is supplied as an OEM component for installation in a custom application, the following two control options and a connecting wire harness are available from Rockwell Automation.

- IntelliVAC and IntelliVAC Plus control modules
- Electromechanical control panel

Connect incoming power to the line side terminals at the top, rear of the contactor near the control fuse clips. Use 3/8 in. (10 mm) bolts torqued to 20 lb•ft (292 N•m) to secure the connection.

Connect outgoing power to the load side terminals halfway down the rear of the contactor. Use 3/8 in. (10 mm) bolts torqued to 20 lb•ft (292 N•m) to secure the connection.

For mechanically latched contactors, the manual trip button in the cabinet door must be in line with the trip lever on the contactor.

Figure 8 - Electrical Connections (Rear View)

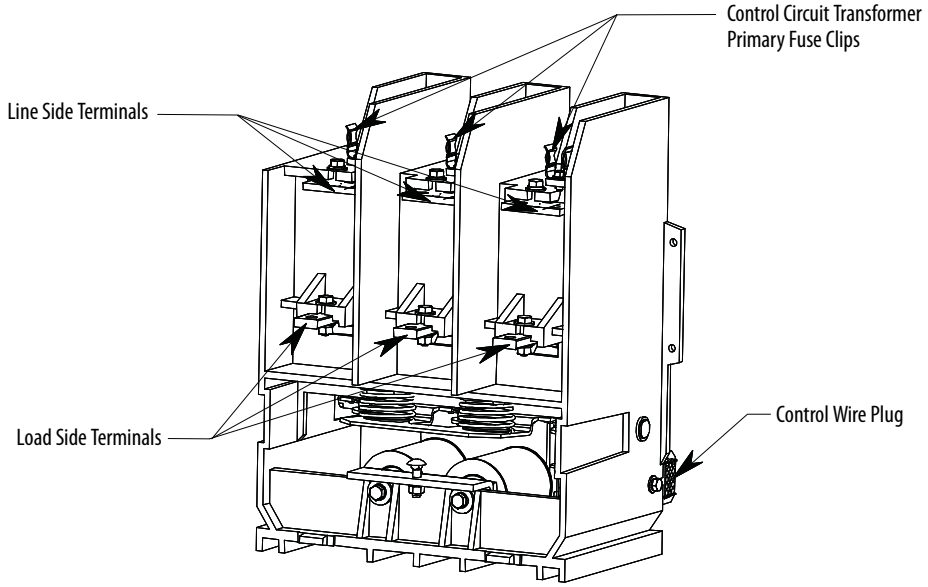

Wiring and Schematic Diagrams

Figure 9 - Wiring Diagram - Electrically Held Contactor (for use with IntelliVAC and IntelliVAC Plus Control Modules Only)

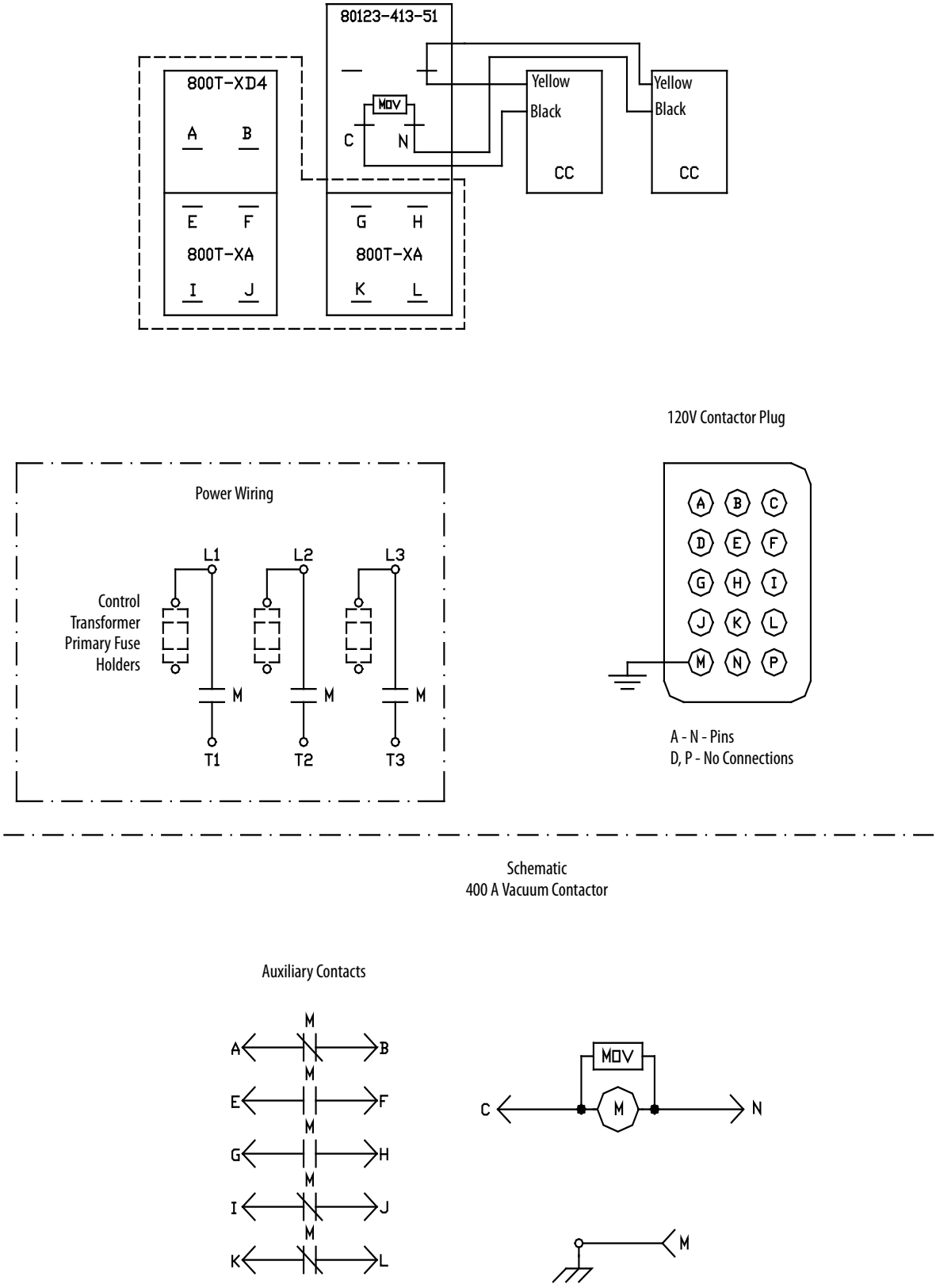

Figure 10 - Wiring Diagram - Mechanical Latch Contactor (for use with IntelliVAC and IntelliVAC Plus Control Modules Only)

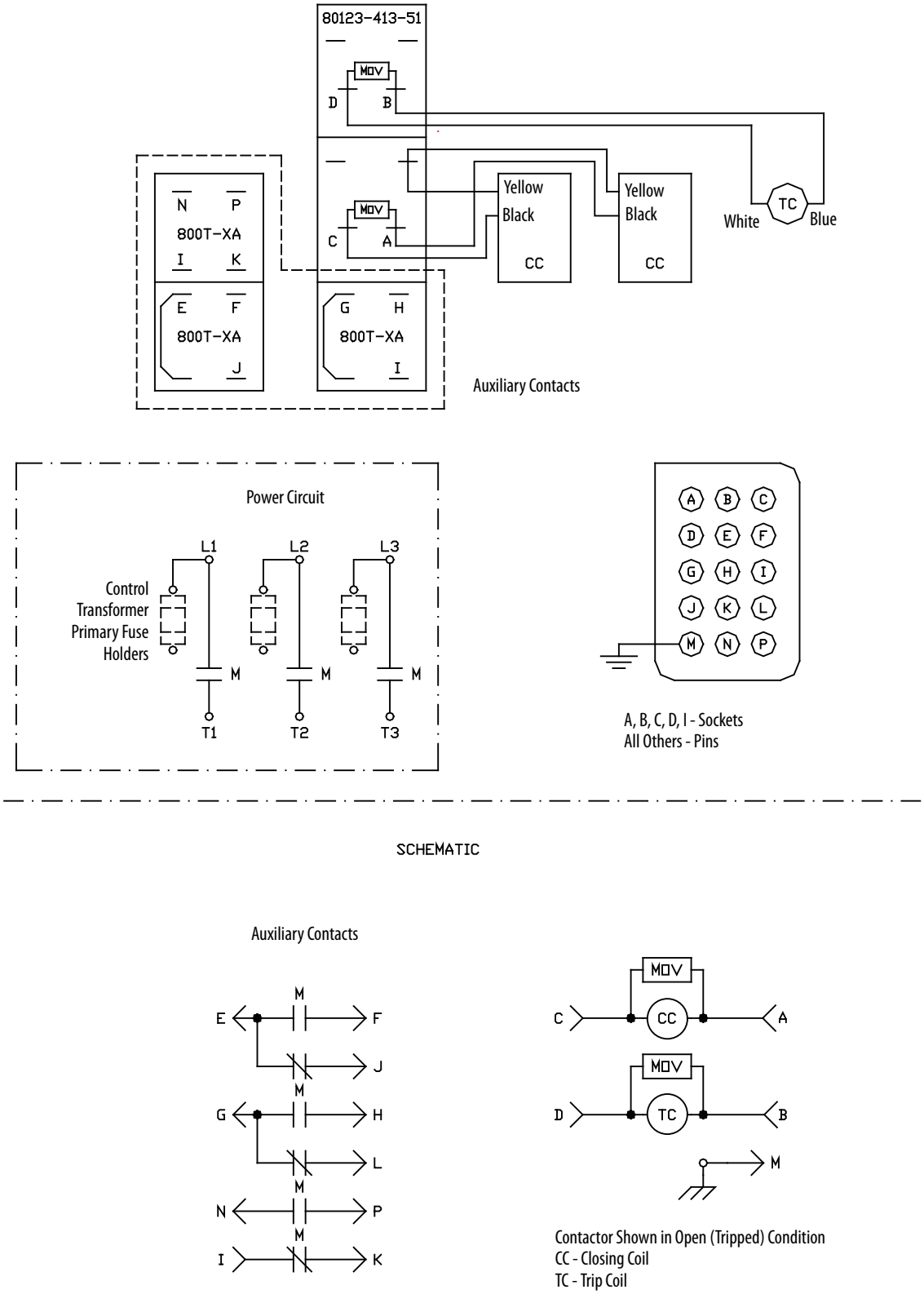

Figure 11 - Wiring Diagram - Mechanical Latch Contactor (for use with Electromechanical Control Panel Only)

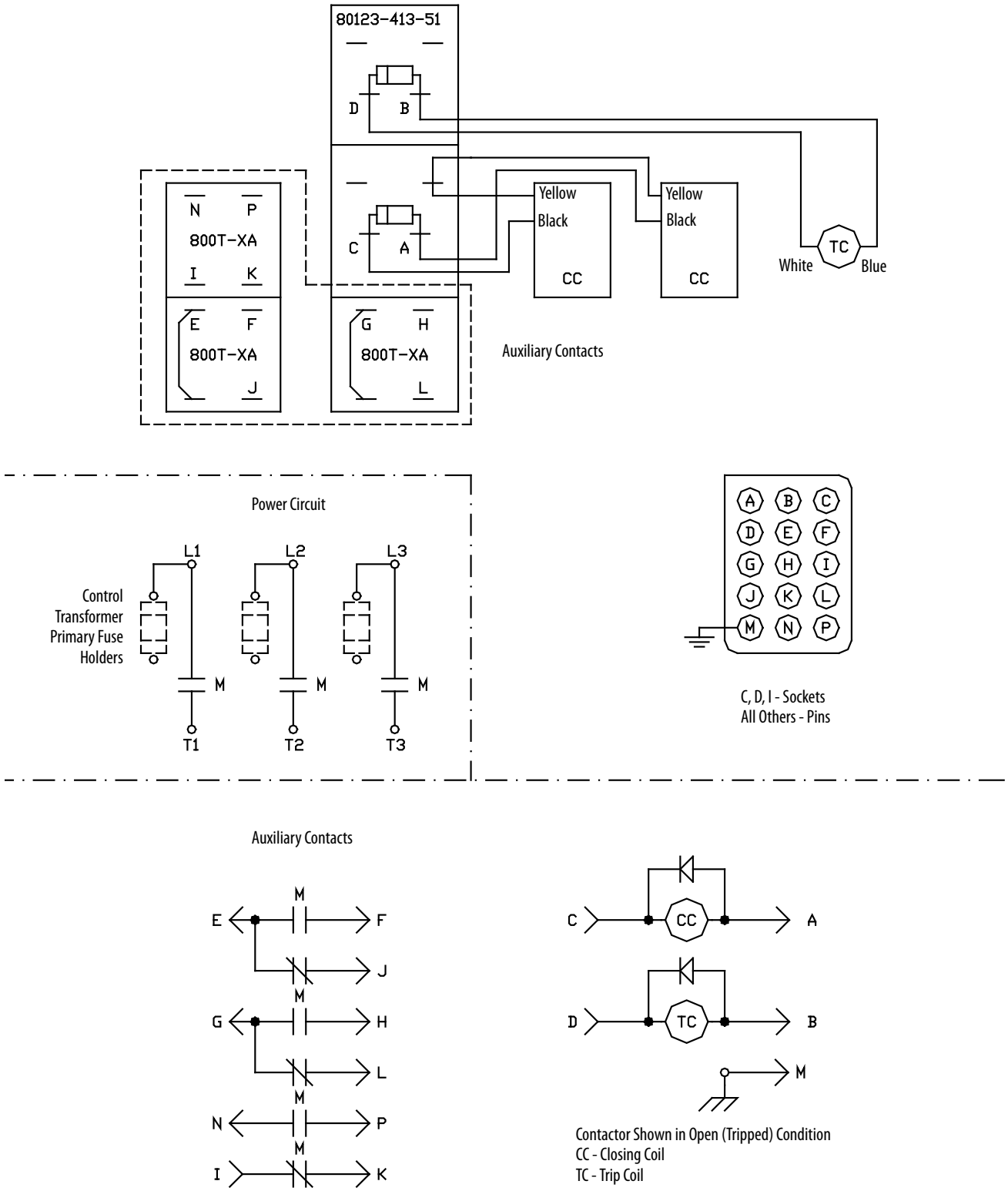

Figure 12 - Wiring Diagram - Electrically Held Contactor, 120V AC, Normal Dropout Time, (for use with Electromechanical Control Panel Only)

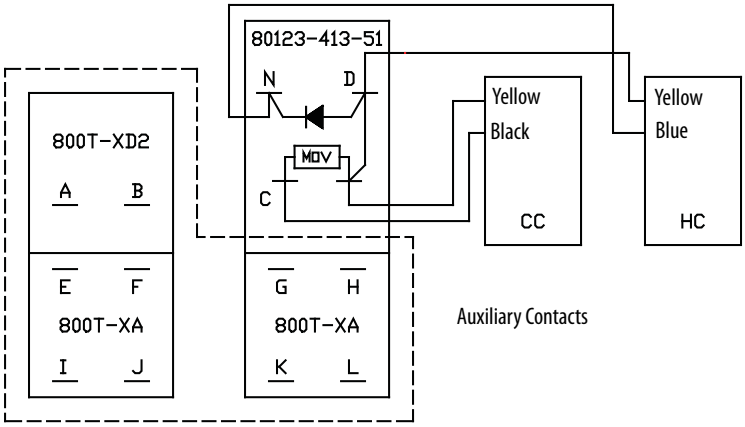

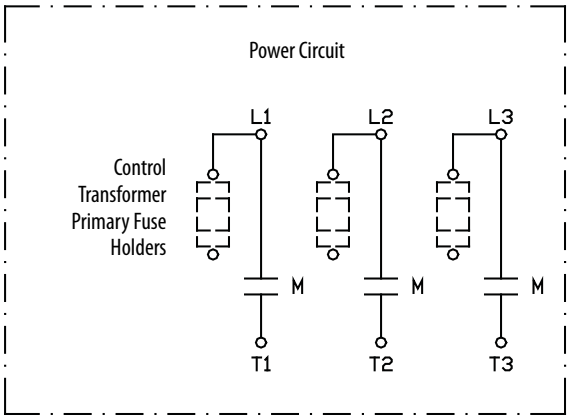

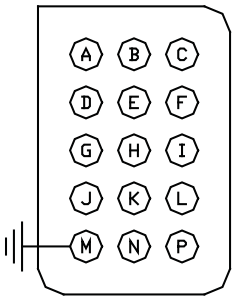

A - N - Pins

Schematic
400 A Vacuum Contactor
120V Coil, Normal Dropout

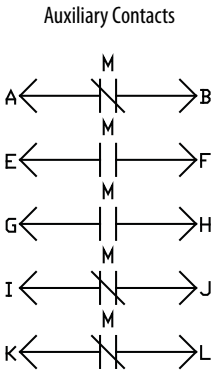

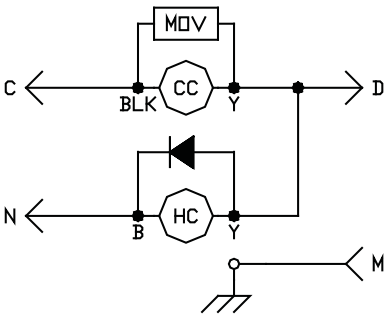

CC - Closing Coil
HC - Holding Coil

Figure 13 - Wiring Diagram - Electrically Held Contactor, 230V AC, Normal Dropout Time, (for use with Electromechanical Control Panel Only)

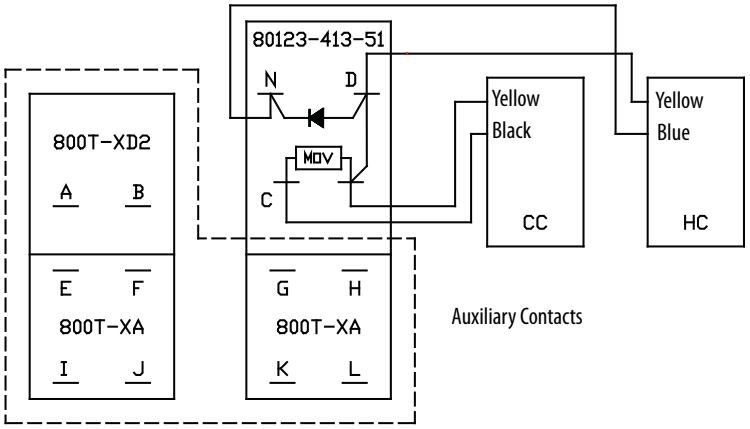

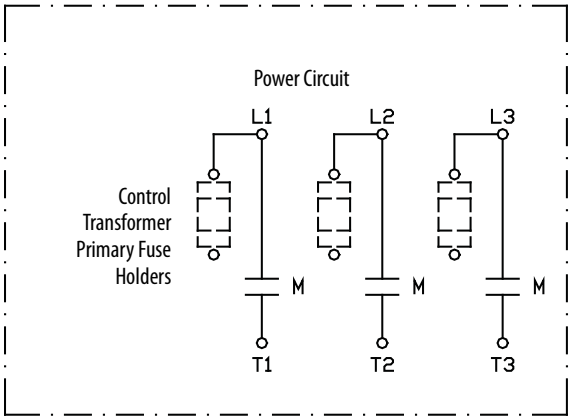

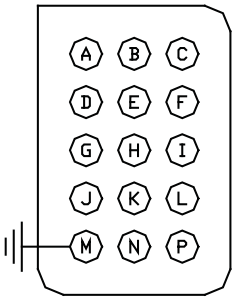

B, C, D, E, F, G, H, I, J, K, N - Pins
A, L, M - Sockets
P - Not used

Schematic
400 A Vacuum Contactor
230V Coil, Normal Dropout

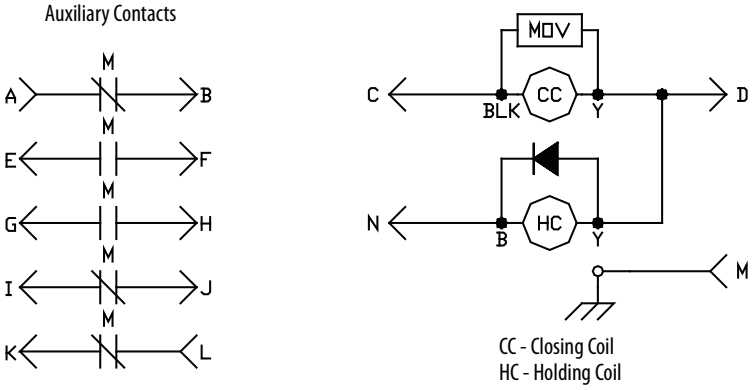

Figure 14 - Wiring Diagram - Electrically Held Contactor, 120V AC, Fast Dropout Time, (for use with Electromechanical Control Panel Only)

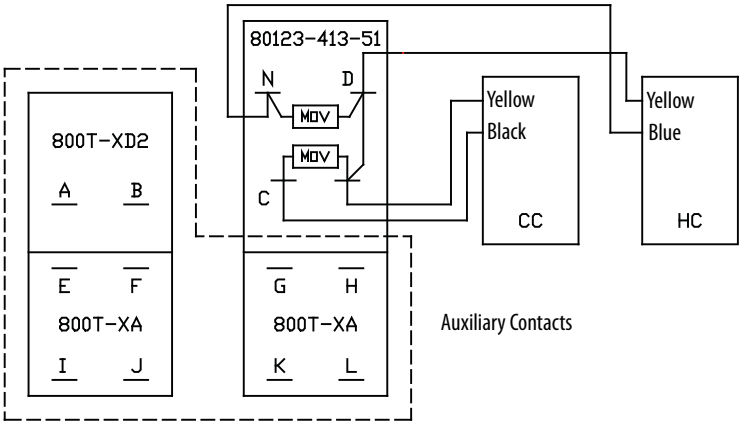

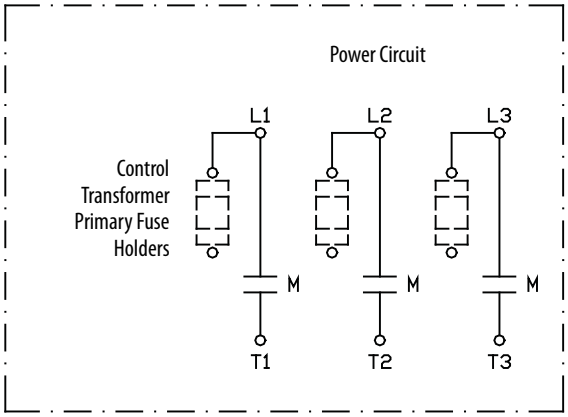

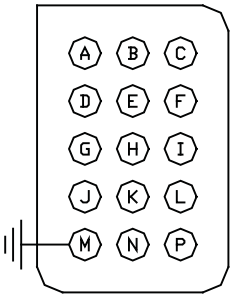

A - N - Pins

Schematic
400 A Vacuum Contactor
230V Coil, Fast Dropout

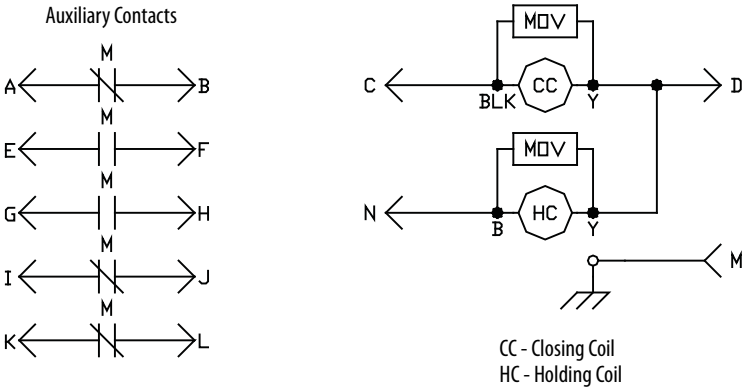

CC - Closing Coil
HC - Holding Coil

Figure 15 - Wiring Diagram - Electrically Held Contactor, 230V AC, Fast Dropout Time, (For Use with Electromechanical Control Panel Only)

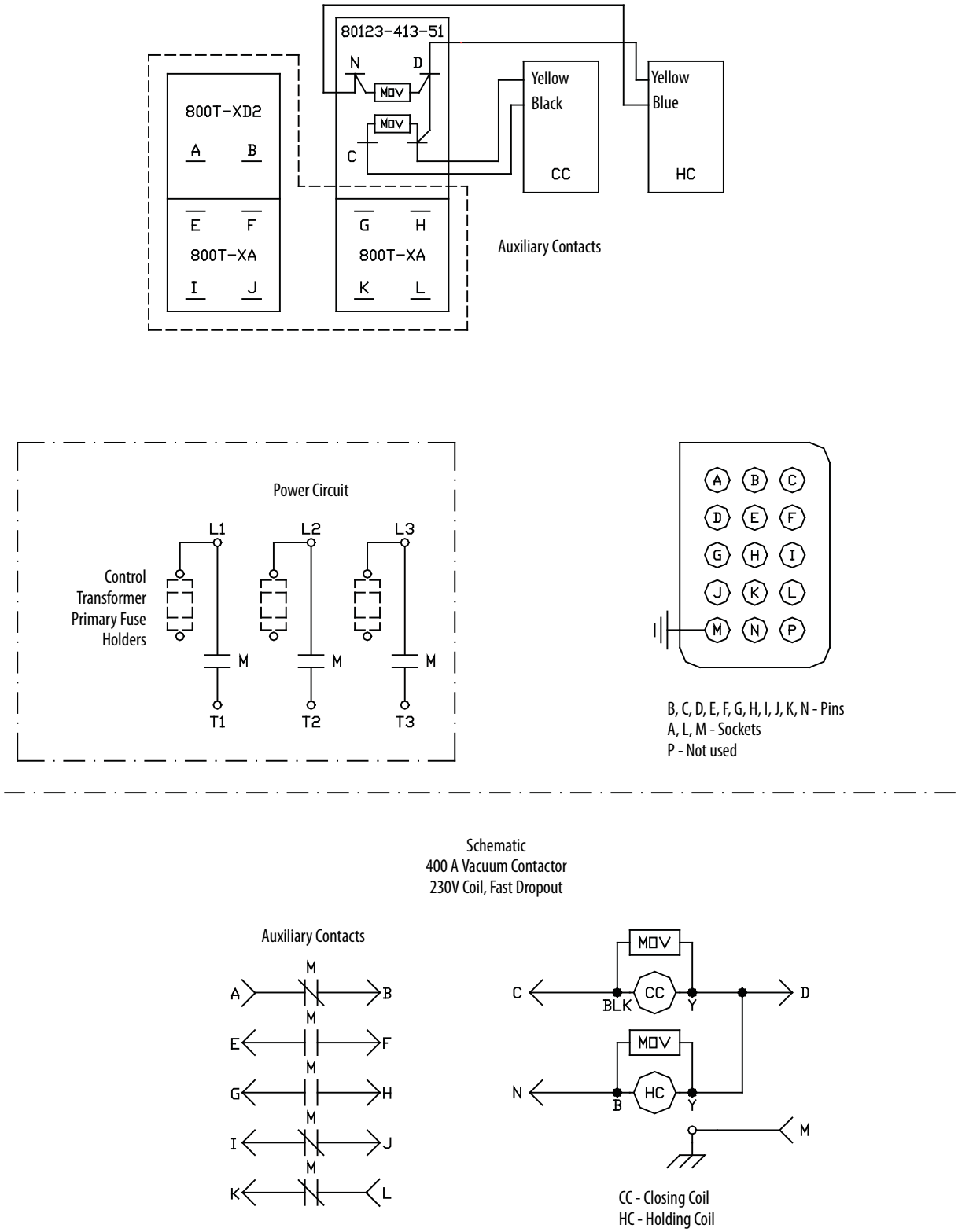

Figure 16 - Typical Schematic Diagram for 400 A Full-Voltage Non-Reversing (FVNR) Controller With IntelliVAC Control and Electrically Held Contactor

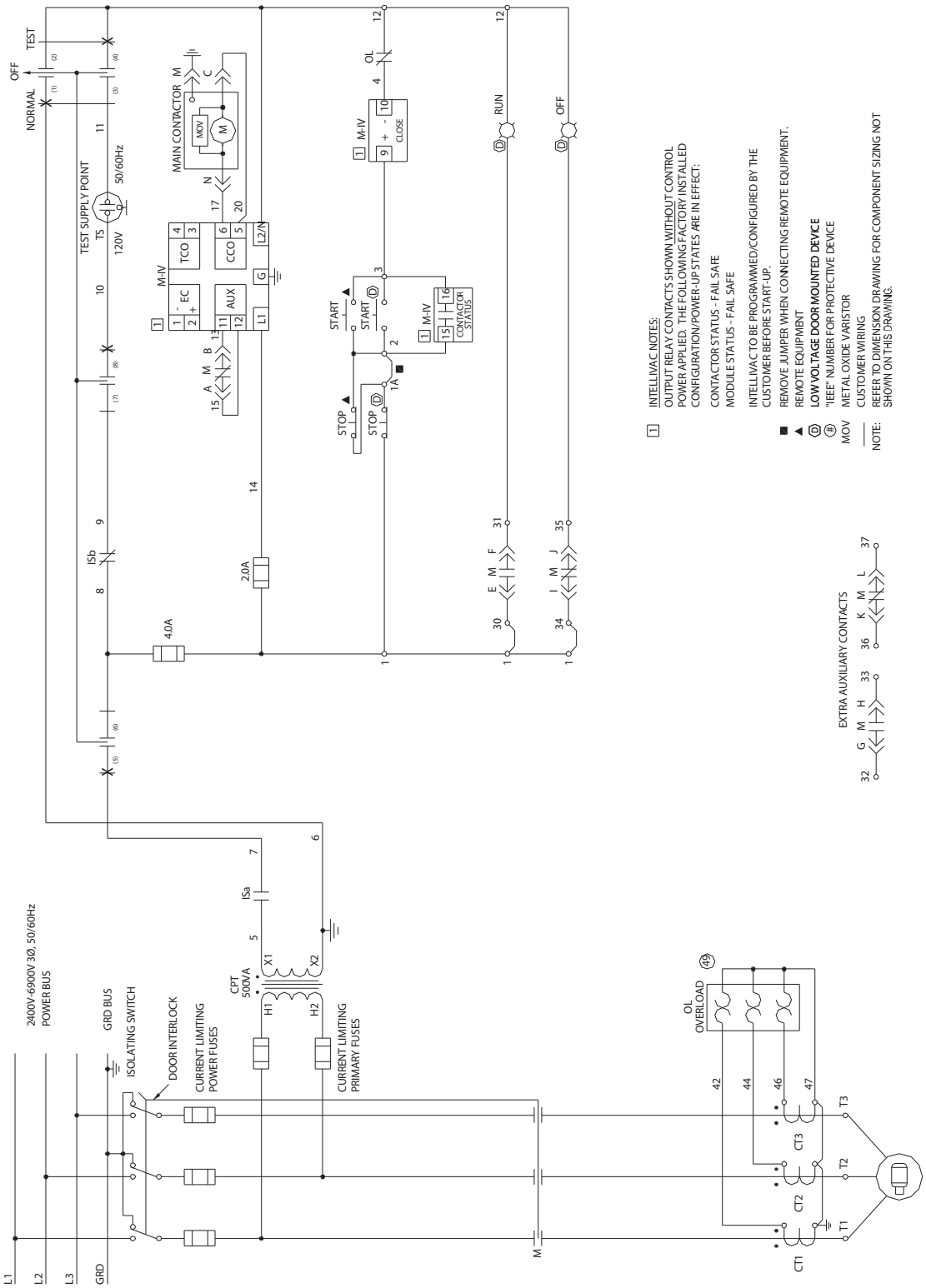

Figure 17 - Typical Schematic Diagram for 400 A Full-Voltage Non-Reversing (FVNR) Controller With IntelliVAC Control and Mechanical Latch Contactor

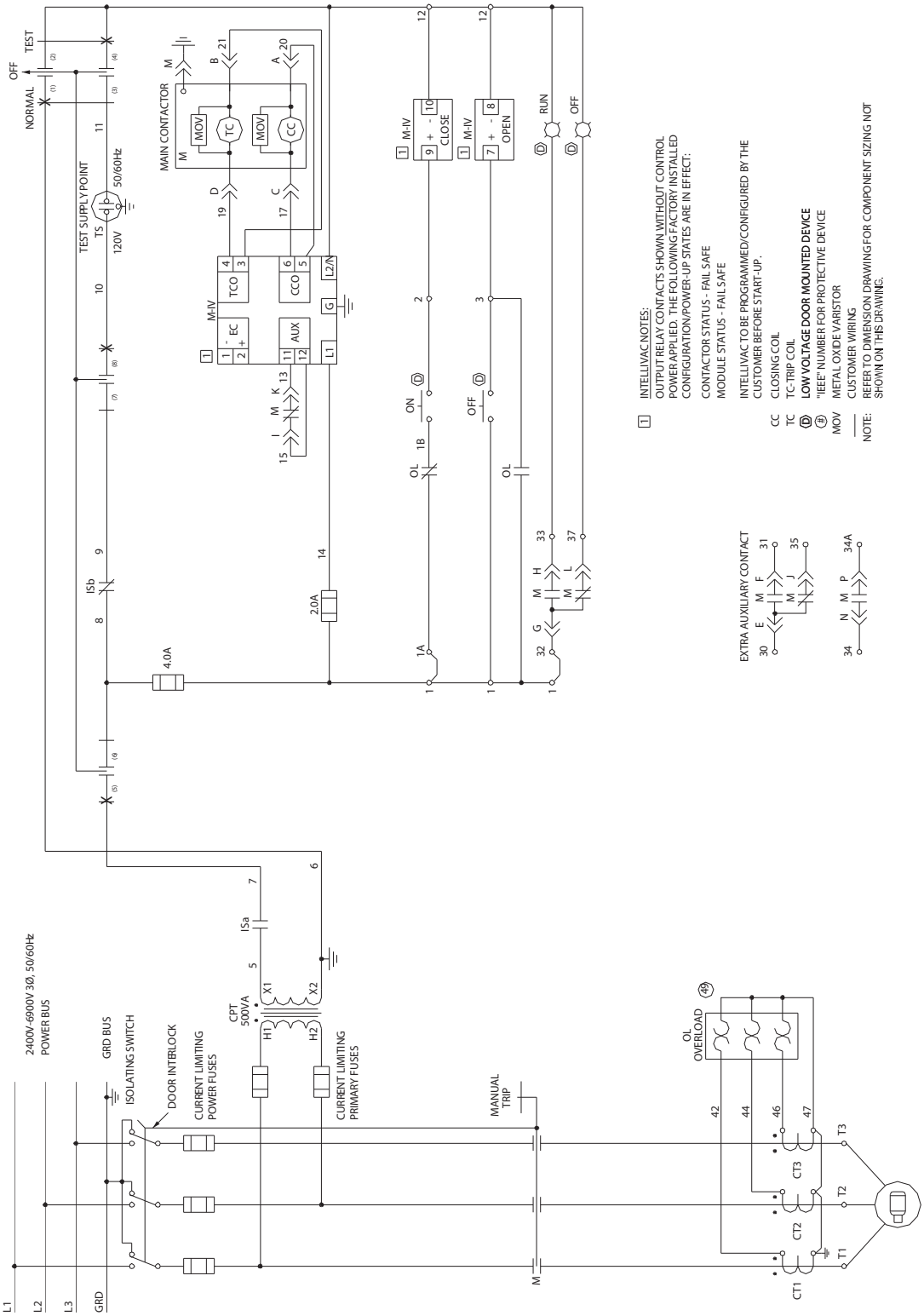

Figure 18 - Typical Schematic Diagram for 400 A Full-Voltage Non-Reversing (FVNR) Controller With Electro-Mechanical Control and Mechanical Latch Contactor(1)

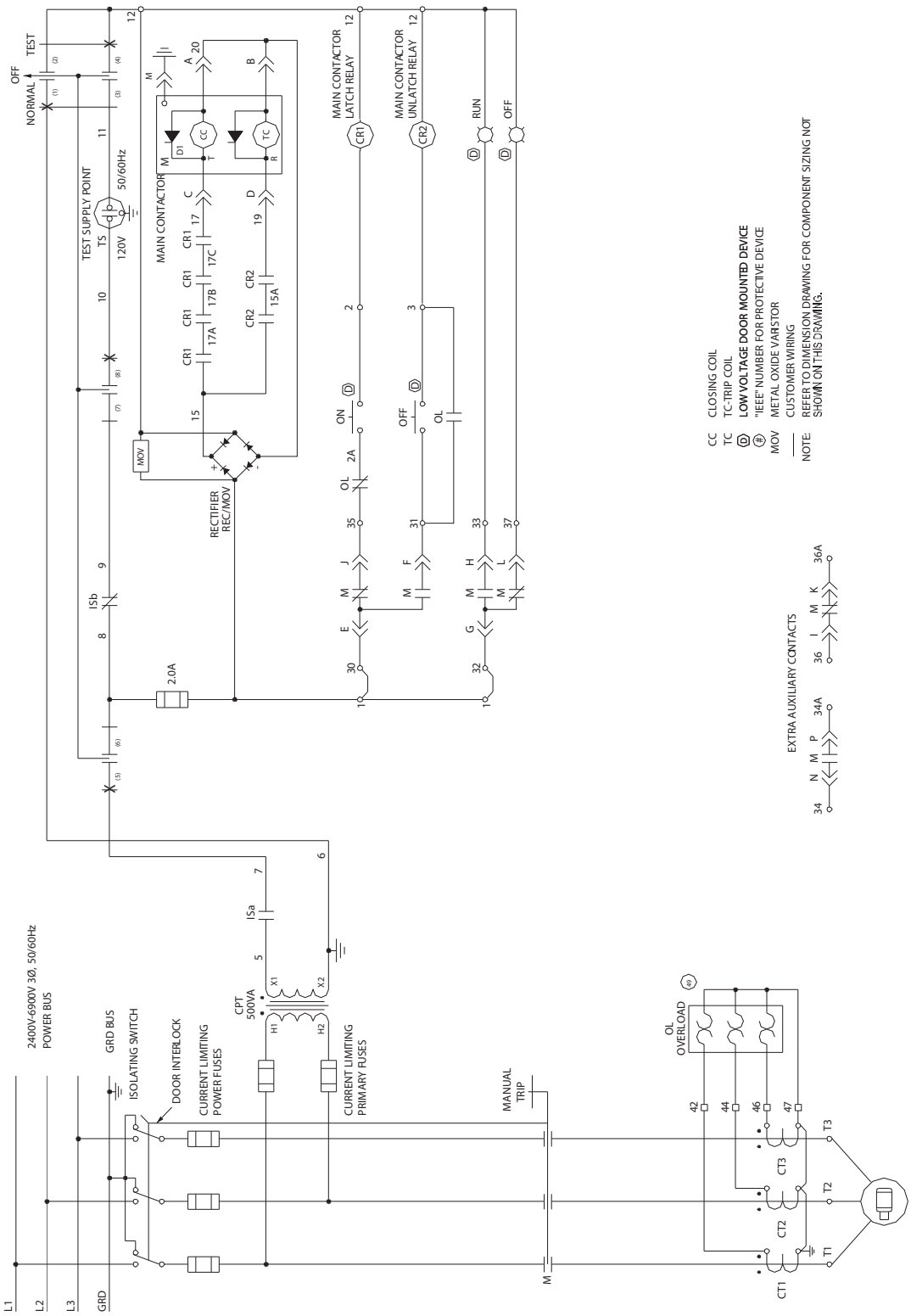

(1) CR1 and CR2 and the wiring of their contacts into the control circuit are part of the Rockwell Automation relay control panel (1503C-XXX or 1503E-CXXX). This control panel provides reliable operation of the contactor within its published specification.

Figure 19 - Typical Electrical Diagram for 400 A Full-voltage Non-reversing (FVNR) Controller with Electrically Held Contactor, 120V AC (Normal Drop-out Time)(1)

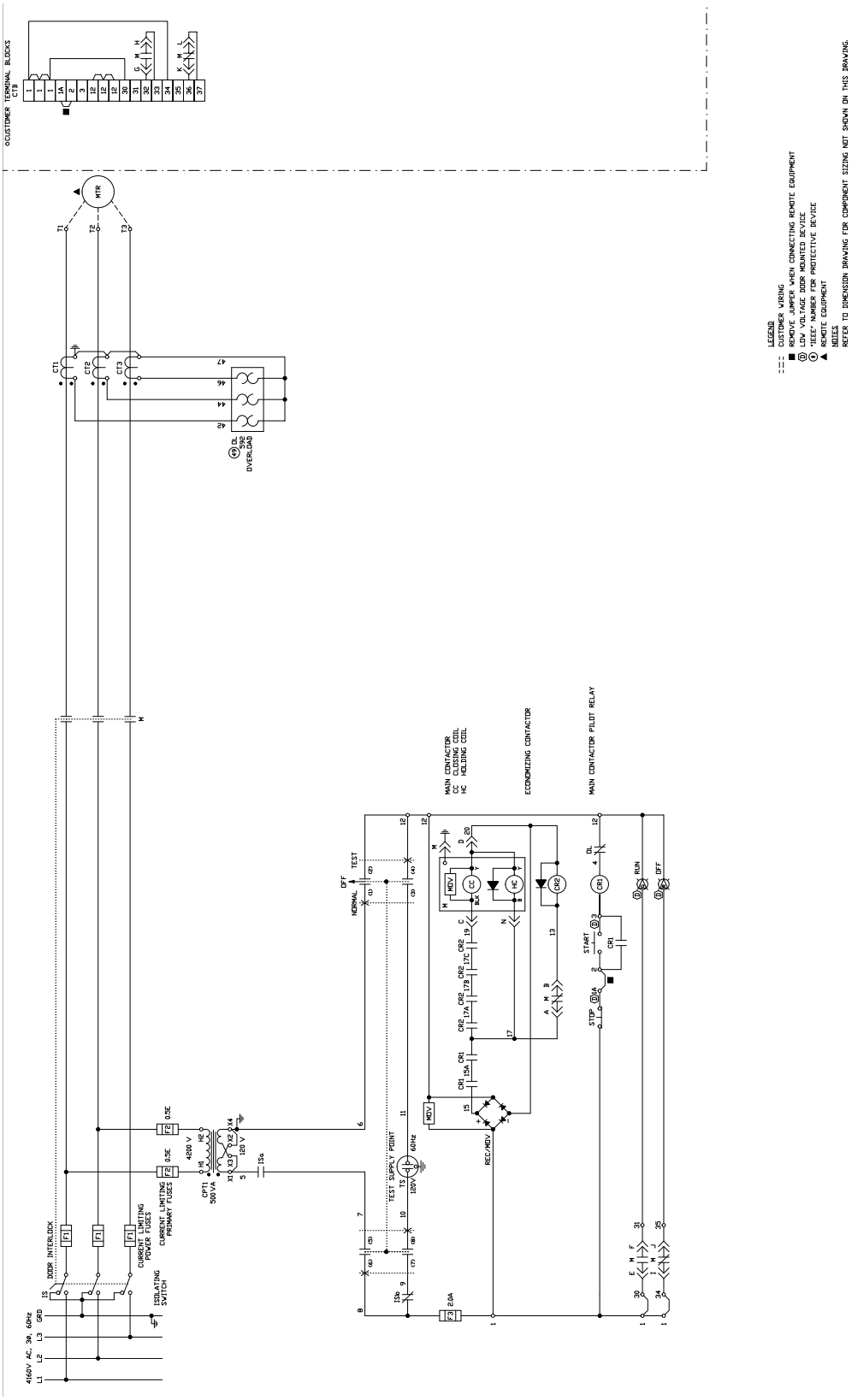

(1) CR1 and CR2 and the wiring of their contacts into the control circuit are part of the Rockwell Automation relay control panel (1503C-XXX or 1503E-CXXX). This control panel provides reliable operation of the contactor within its published specification.

Maintenance

Tool Requirements

IMPORTANT Some components of this product incorporate imperial hardware. Rockwell Automation recommends the use of the appropriate tools to complete the maintenance procedure on these components. If you cannot obtain such tools, contact your Rockwell Automation sales office.

When maintenance is performed on the vacuum contactor, the following tools are required:

- 3/8 in. drive ratchet wrench with extension
- 3/8 in. drive torque wrench
- Standard 3/8 in. drive sockets; 7/16 in., 1/2 in.
- Open-end wrenches; 7/16 in., 1/2 in., 5/8 in.
- Slot head screwdrivers; 1/8 in. wide, 1/4 in. wide
- External retaining ring pliers (STANLEY-PROTO #393 or equivalent)
- Feeler gauge set (0.030 in. [0.76 mm] and 0.075 in. [1.91 mm])
- Feeler gauge set (0.010 in. [0.25 mm]) Mechanical Latch
- 2 in. C-Clamp
- Armature clamping fixture (Allen-Bradley Part No. 80154-149-51)
- Digital caliper capable of depth measurement
- High potential tester

Recommended Torque Values

Part of the contactor may have to be disassembled for maintenance or replacement. There are appropriate torque requirements for particular bolt sizes when reassembling the contactor. Use the torque values that are specified in Table 9.

Table 9 - Torque Values

#10 in. Hardware	2.7 lb•ft (3.6 N•m)
1/4 in. Hardware	6 lb•ft (8 N•m)
5/16 in. Hardware (Grade 2)(1)	11 lb•ft (15 N•m)
5/16 in. Hardware (Grade 5)(2)	18 lb•ft (24 N•m)
3/8 in. Hardware	20 lb•ft (27 N•m)

(1) All 5/16 hardware is Grade 2 unless otherwise specified.
(2) See Figure 22.

Routine Maintenance

ATTENTION: Before performing any maintenance on the contactor, refer to the User Manual of the starter configuration. Failure to do so can result in injury to personnel or damage to the controller or contactor.

ATTENTION: To avoid shock hazards, lockout incoming power and disconnect the control plug from the contactor before working on the unit. Verify with a hot stick or meter that all circuits are voltage free. Failure to do so can result in severe burns, injury, or death.

The following must be performed annually or whenever a contactor is serviced:

Cleaning

1. Clean all metal chips or filings from around the electromagnet assembly (coil core pole face and mating armature plate) as they can affect proper operation of the contactor. Vacuum clean if necessary.

IMPORTANT Do not use compressed air to clean or remove dirt from surfaces or the enclosure.

2. If the vacuum bottles are dirty, clean the white ceramic area with a clean lint-free cloth.

Main Contact Inspection

Visually inspect the wear of the main contacts with the contactor energized. When any part of the wear indicator line, located on the front side of the shaft, moves up into the bearing, replace all three vacuum bottles (Figure 20).

Figure 20 - Vacuum Bottle Wear Indicator

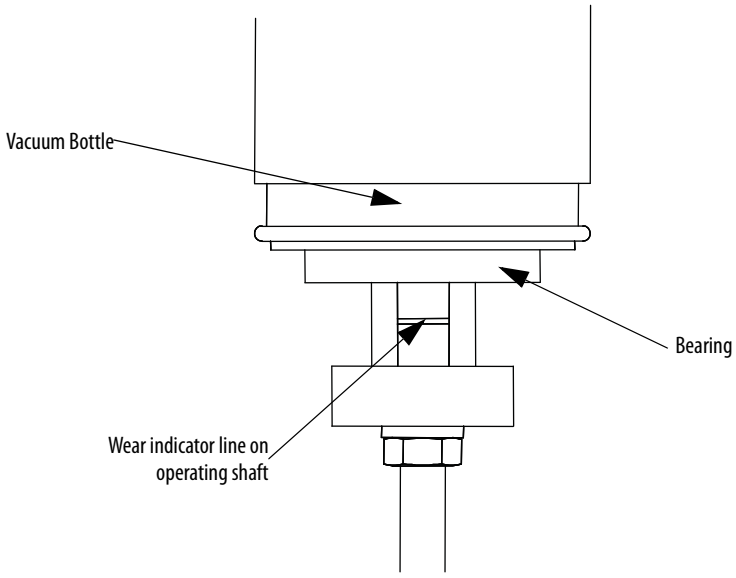

HiPot and Insulation Resistance Test

The internal dielectric condition and vacuum integrity of the vacuum bottles is determined by this test.

See page 18 to check the vacuum bottle integrity.

See page 20 to check the insulation resistance.

Lubrication

Using AeroShell No. 7 (1 oz tube, Part No. 40025-198-01), grease the actuator plate where the overtravel springs and washers make contact (Figure 21).

Figure 21 - Grease Locations

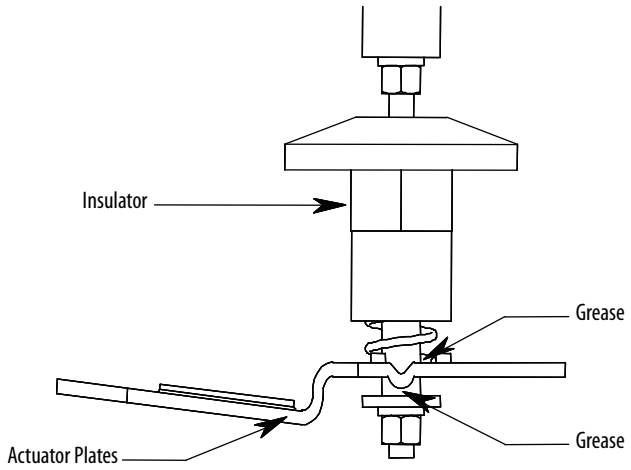

IMPORTANT Do not grease the armature shaft plastic bearings. These bearings are self-lubricating and do not require grease.

Vacuum Bottle Replacement

Do not replace the vacuum bottles in the field. If the vacuum bottles need to be replaced, remove and return the vacuum contactor to Rockwell Automation for refurbishment.

Coil Replacement Procedure

See Spare Parts on page 54 for the part numbers that are required for this procedure.

1. Remove the auxiliary actuator, front stop bracket, and armature plate as shown in Figure 22.

   Do not remove the bolts that secure the stop bracket. Loosen them and slide out the bracket.

Figure 22 - Access to Coils

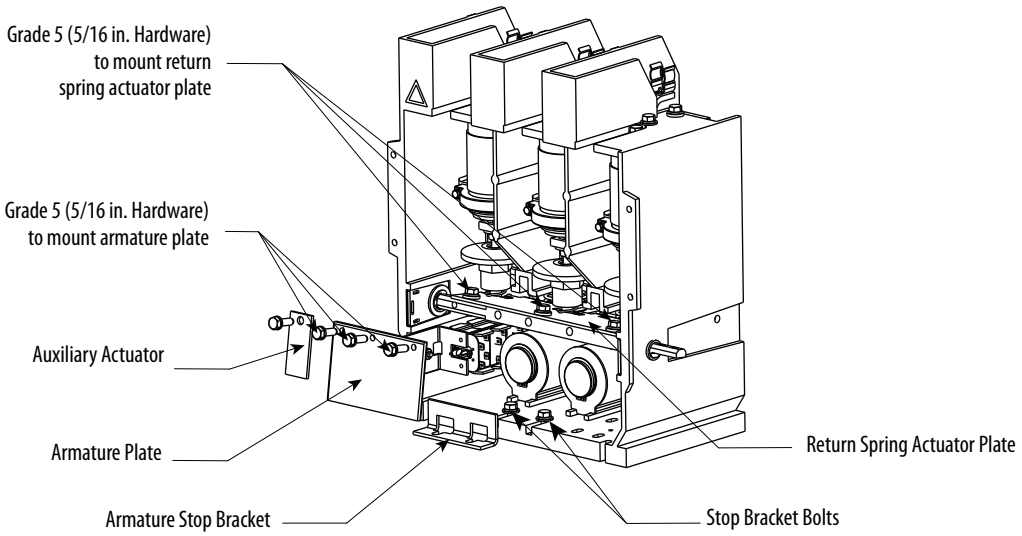

2. Remove the retaining ring from the core of the coil you wish to replace as shown in Figure 23.
3. Loosen the auxiliary assembly retaining bolt and slide the assembly and the coils forward and out of the contactor as shown in Figure 23.

Figure 23 - Coil Removal

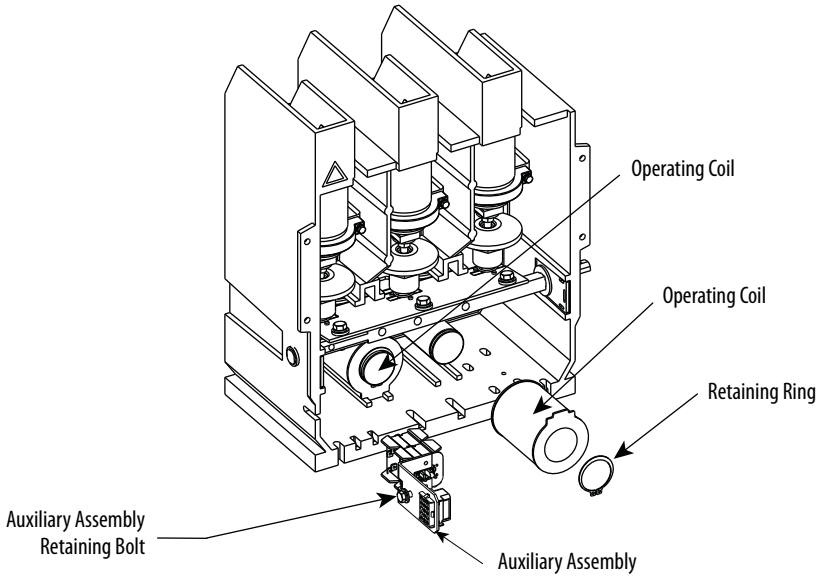

4. Disconnect the coil leads (take note of their location). Connect the leads of the new coil making sure that all metal-oxide varistors (MOVs) and/or diodes are secure. See the appropriate wiring diagram in this manual for further control wiring details (page 24).
5. Slide the new coil into position and install the retaining ring on the core. Install the auxiliary assembly leaving the retaining bolt loose for adjustment later. See the Auxiliary Contact Setup Procedure (page 40) for determining the position of the auxiliary assembly.

6. Install the armature plate, auxiliary actuator and stop bracket. Position the stop bracket by resting it lightly against the armature plate.

IMPORTANT This procedure applies to adjustment of existing auxiliaries and installation of new auxiliaries. Under normal conditions, auxiliaries last at least 1,000,000 operations. If auxiliary contacts must be replaced, discard the entire assembly and install a new assembly. Discarding the entire assembly is easier than replacing one contact block.

Auxiliary Contact Setup Procedure

See Spare Parts on page 54 for part numbers required for this procedure.

To facilitate the set-up procedure, the contactor is held closed mechanically with a clamping fixture (Figure 24). It is important that the contactor is held closed tightly with the armature plate against the magnet cores when gauging the overtravel and auxiliary positioning.

To aid in closing the contactor mechanically, a clamping fixture is required. Allen-Bradley part number **80154-149-51** is recommended.

Figure 24 - Contactor Components

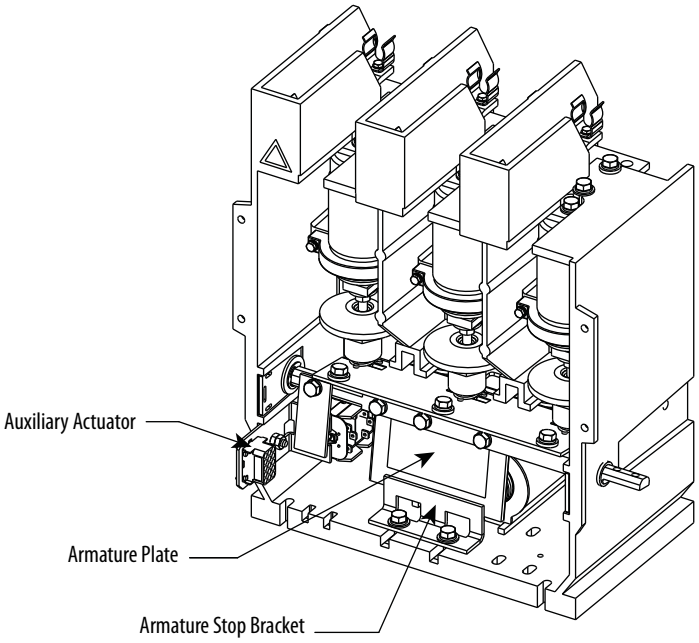

1. Loosen the nuts on auxiliary assembly retaining bolt. This requires loosening and removal of the first nut that secures a ground wire at this location. Leave the nut loosened enough to permit the assembly to slide along the adjustment slot as shown in Figure 25.

Figure 25 - Auxiliary Contact Adjustment

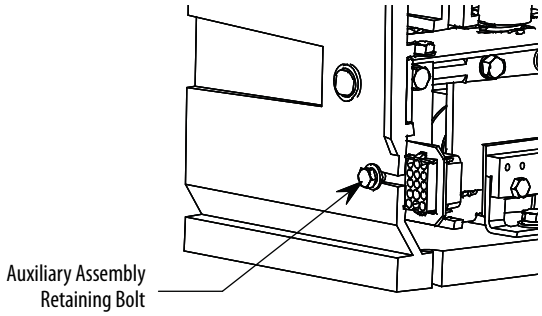

2. Slide the clamping fixture (part number 80154-149-51) over the top of the armature stop bracket (Figure 26). Finger-tighten the two outside fixture mounting bolts against the armature stop bracket. You might have to push the armature plate a little to the rear to put the clamp in place.

Figure 26 - Clamping Contactor Closed

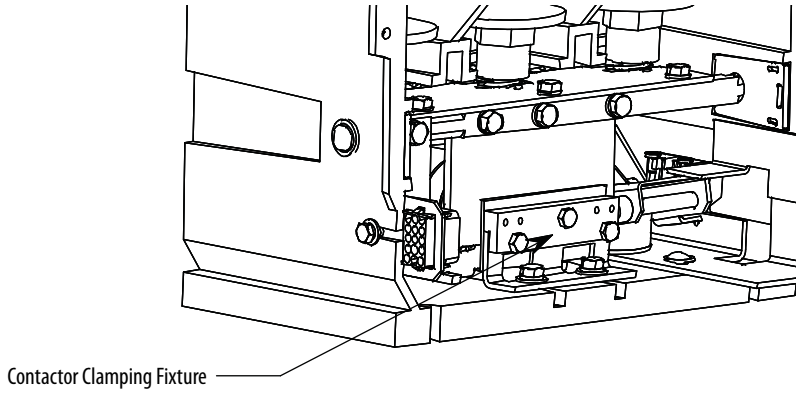

3. Place a 5/8 in. wrench on the main shaft of the contactor, pull-down and close the contactor (Figure 27) while finger-tightening the top middle screw on the clamping fixture.

ATTENTION: Do not bend the actuator stop plate.

Figure 27 - Closing the Contactor

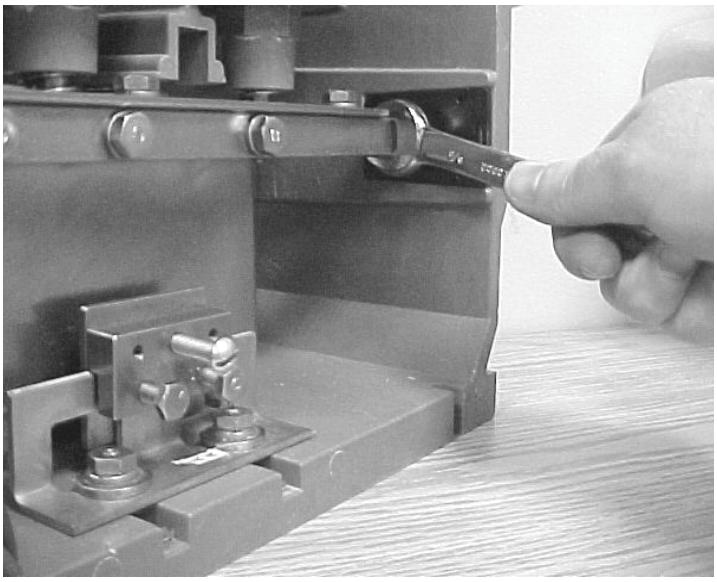

4. After the top screw is finger tight, continue to tighten this screw with a hand tool. The armature stop bracket flexes a little, which is acceptable, but do not overtighten and bend the armature stop plate. It is important that the armature plate is held tightly against the magnet cores. The contactor must be fully closed.
5. Place a wide blade 0.030 in. (0.76 mm) feeler gauge between the plastic auxiliary actuator tips and the steel actuator plate. To aid the installation of the feeler gauge, the gauge can be put in place as the clamping block screw is being finger-tightened (Step 3). See Figure 28 and Figure 29.

Figure 28 - Gauging the Contacts

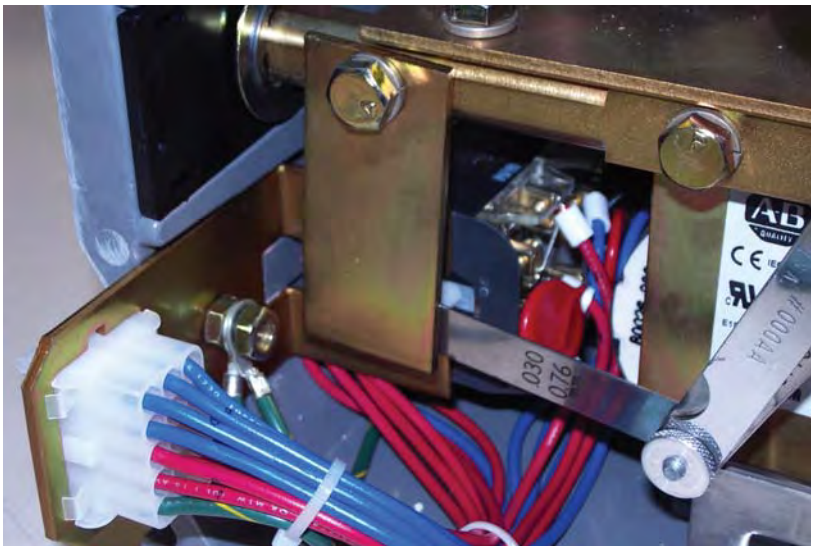

Figure 29 - Gauging Auxiliary Contact Location

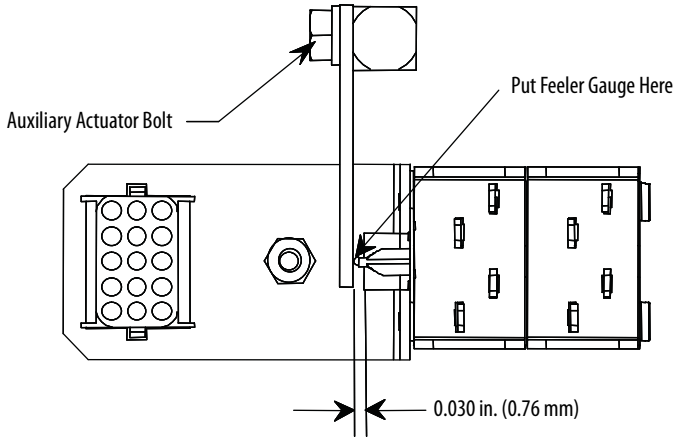

6. With the gauge in place, slide the assembly forward until the contact actuator bottoms out. With the gauge still in place, carefully tighten the auxiliary assembly retaining nut.

IMPORTANT Hold the bolt head using a wrench when you tighten the nut. Make sure that the auxiliary assembly does not move as you tighten the nut.

7. When the first nut is tightened, slide out and remove the feeler gauge.
8. Reinstall the green ground wire on the auxiliary assembly retaining bolt. Install and carefully tighten the second nut.
9. Slowly loosen the top screw of the contactor clamping fixture to remove the pressure on the armature plate. Loosen the two mounting screws on the contactor clamping fixture. Remove the fixture.
10. Energize the control circuit in "TEST" mode and exercise the contactor to verify set-up. Contactor must open and close smoothly and solidly.

Mechanically Latched Contactor Trip Coil Replacement Procedure

Parts

See Spare Parts on page 54 for the part numbers required for this procedure.

- Required Tools
- Two 7/16 in. Wrenches
- 3/8 socket and ratchet
- 5/16 socket and ratchet
- Phillips Screwdriver
- 3/32 in. Right Angle Allen Key
- Feeler gauges
- Side Cutting Pliers
- Wire Ties
- Armature Clamping Fixture, 80154-149-51

Procedure

1. Cut wire ties at the rear of the contactor holding the mechanical latch coil wires in place (Figure 30).

Figure 30 - Rear View of Mechanical Latch Contactor (showing wires to trip coil)

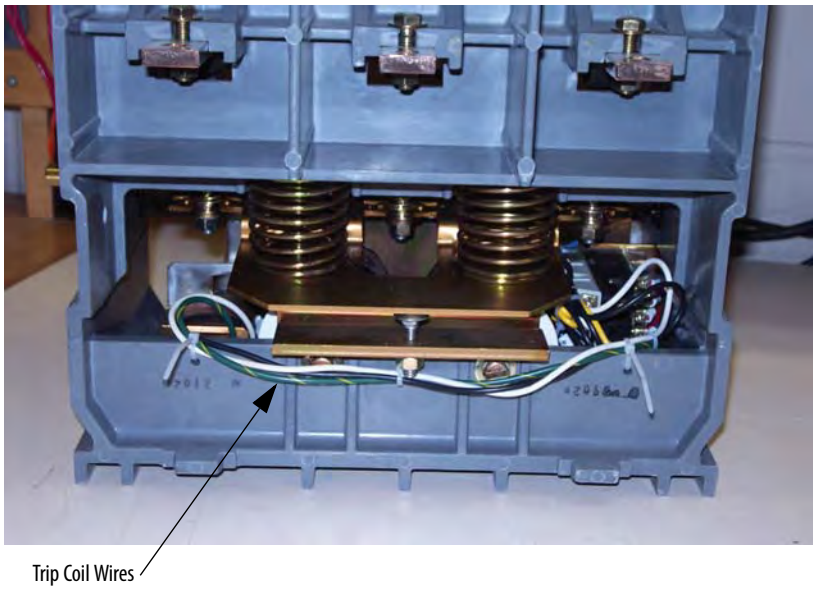

2. Using ½ in. wrench, remove the auxiliary contact actuator plate from the main shaft assembly (Figure 31).

Figure 31 - Auxiliary Actuator Plate Removal

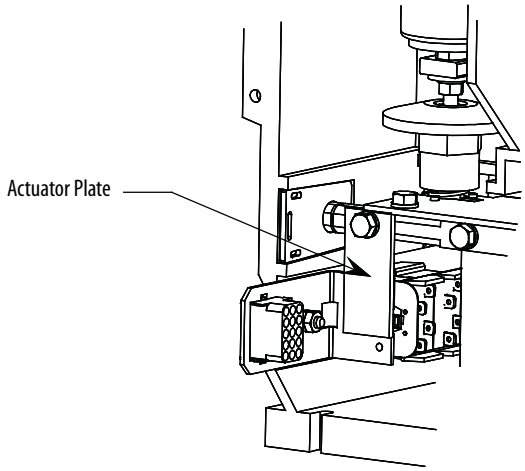

3. Using two 7/16 in. wrenches, loosen the auxiliary contact assembly retaining bolt and slide the auxiliary contact assembly out of the front of the contactor (Figure 32).

Figure 32 - Auxiliary Contact Assembly Removal

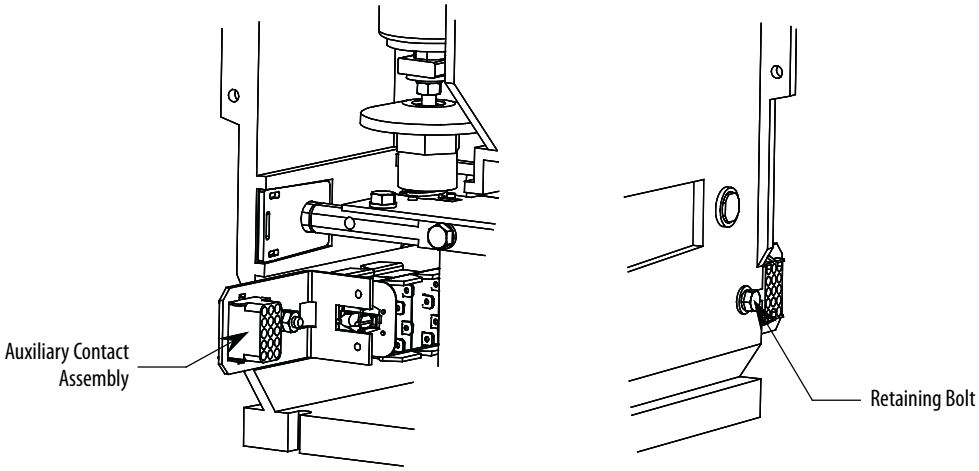

4. Disconnect the mechanical latch trip coil leads form the auxiliary contact assembly using a Phillips screwdriver.
5. Using a 3/8 in. socket, remove the ¼-20 hardware holding the mechanical trip mechanism in place, and then remove the mechanical trip mechanism (Figure 33).

Figure 33 - Removal of Mechanical Trip Mechanism

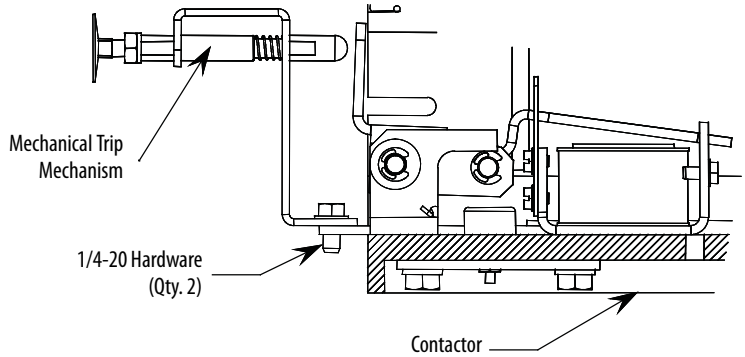

6. Remove the "E" clip and washer from the latch lever assembly shaft and then remove the shaft (Figure 34). Remove the latch lever assembly from the mechanical latch base. The return spring is "seated" on the right side of the mechanical latch base (the contactor is not shown for clarity).

Figure 34 - Removal of Latch Lever Assembly

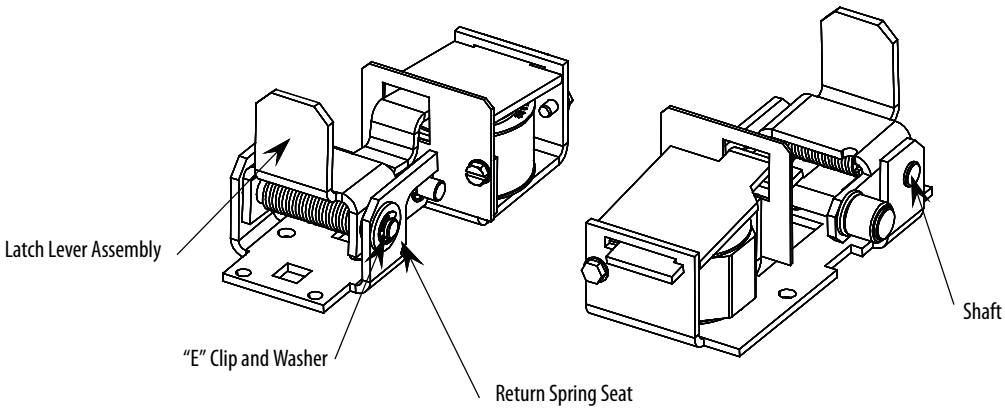

7. Using a 5/16 in. socket, remove the #10-32 hardware holding the stainless steel guide/stop plate in place, and then remove the guide/stop plate (Figure 35). The contactor not shown for clarity.

Figure 35 - Removal of Guide/Stop Plate

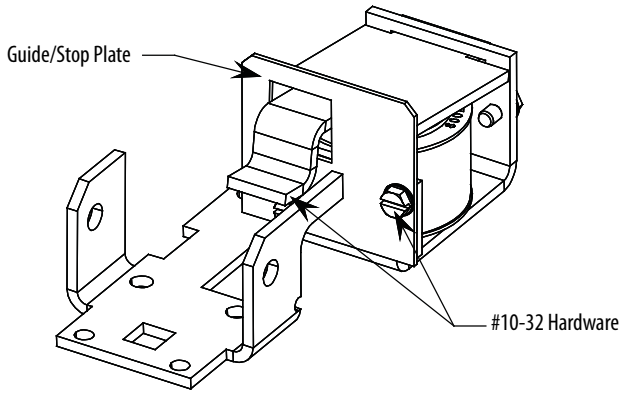

8. Remove the flapper by sliding it to the right until it stops and then pulling it towards the front of the contact (Figure 36). The trip (magnet) coil and coil core are now exposed (The contactor not shown for clarity).

Figure 36 - Removal of Flapper

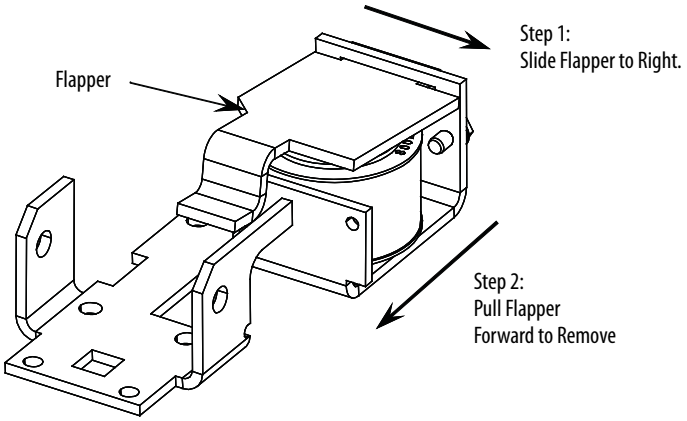

9. Remove the coil core (Figure 37) and trip (magnet) coil using a right angle Allen key. The contactor is not shown for clarity.

Figure 37 - Trip Coil and Core Removal

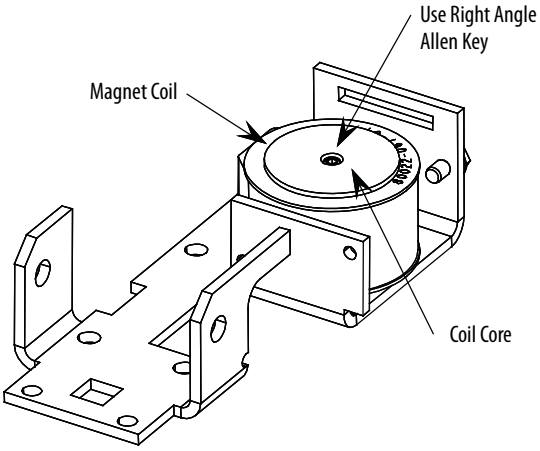

10. Slide the coil core from the trip (magnet) coil and then place the replacement coil onto the coil core.
11. Connect the new trip (magnet) coil leads to the auxiliary contact assembly.
12. Reassemble the mechanical latch and auxiliary assembly in reverse order of this procedure.
13. Perform the auxiliary contact assembly adjustment procedure (see page 40). The contactor will not function correctly if this step is not performed.

14. Verify that the replacement trip coil functions by using Test Power to close (latch) the contactor. Complete the cycle by opening (tripping) the contactor. Perform this sequence 2...3 times to verify that the contactor closes (latches and opens (trips) properly.

Mechanically Latched Contactor Setup Procedure

1. The overtravel, contact gap, and auxiliary set up procedures are the same for mechanically latched contactors as they are for electrically held contactors except that instead of energizing the contactor with the "TEST" circuit, the contactor must be held closed mechanically with a clamp or special fixture as shown in Figure 38. It is important that the contactor is held closed tightly with the armature against the magnet cores when gauging the overtravel, contact gap, and auxiliary positioning. Allen-Bradley part number 80154-149-51 is recommended, however, a C-clamp can be used at the rear of the contactor to pull up the actuator plate (do not overtighten the C-clamp and bend the actuator plate).

Figure 38 - Clamping a Mechanically Latched Contactor Closed

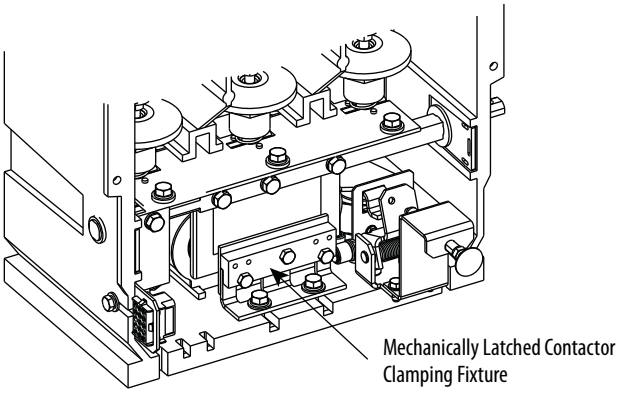

2. Clamp the contactor closed as detailed in Step 1. The latch mechanism must be in place with the mounting bolts loose enough to allow sliding along the adjustment slots.
3. With the contactor lying on its back, insert a 0.015 in. (0.38 mm) feeler gauge between the latch roller and the armature plate as shown in Figure 39. Tighten the mounting blots (do not overtorque 1/4 in. nuts or 5/16 in. bolts).

Figure 39 - Gauging Mechanical Latch Location

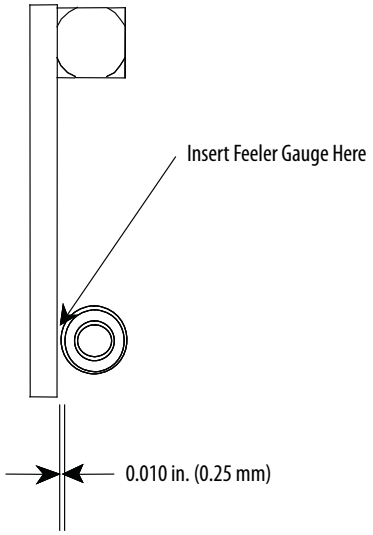

4. With the contactor still clamped, depress the latch lever and release allowing it to spring up. Verify there is smooth, unimpeded motion.
5. Remove the clamp and allow the armature to move out against the roller such that the contactor is in the "latched" condition.

ATTENTION: The return springs exert a significant force on the armature plate. To avoid injury, do not place fingers between the armature plate and the stop bracket at any time.

6. Using the manual trip lever, trip (drop out) the contactor. Apply 2...3 lb of force to trip the contactor. If too little force is required, the mechanism must be moved away from the armature slightly (toward the front of the contactor). If too great a force is required, the mechanism must be moved toward the armature slightly (toward the back of the contactor). If adjustment is required, the contactor must be clamped closed and repeat the set-up procedure with thicker or thinner feeler gauges, as required.

IMPORTANT This setup is sensitive and critical. A few thousandths of an inch makes a noticeable difference in the function of the latch. A mechanism that trips too easily can result in nuisance tripping. A mechanism that requires too much force can result in failure of the coil to trip the latch.

Altitude Adjustment

Altitude affects the performance of a vacuum contactor. Atmospheric pressure helps in closing the main contacts by exerting force on the bellows at the movable end of the vacuum bottles. The force is proportional to the difference between the internal bottle pressure and external atmospheric pressure and adjustments to the operating mechanism must be made to balance the change in closing force. The 400 A contactors are equipped with return springs appropriate for the specific altitude that they are operating at.

IntelliVAC and IntelliVAC Plus vacuum contactors typically use the bronze-colored return springs. The IntelliVAC and IntelliVAC Plus control modules have DIP switch settings permitting for altitude compensation. Electromechanical relay controlled contactors have different springs for different altitudes. The altitude selection must be made at the time of order placement. See publication 1503-UM053 or 1503-UM054.

IMPORTANT Do not install different springs on contactors whose catalog number end s in '-0'.

If a relay controlled contactor is moved to another altitude, see Table 10 to determine the correct return springs for the new altitude range. Replace the springs and correct the rating label information (catalog number, altitude range, and current rating) per Table 10. Note the change Basic Impulse Rating (B.I.L) as it relates to altitude.

Table 10 - Altitude Range Spring Requirements, 400 A (Relay Control Only)

Altitude Range	Spring Part No.	Color Code	Continuous Current Rating	B.I.L. Rating
0…1000 m	80153-567-01	Bronze	400 A	60 kV
1000…2000 m	80026-007-02	Green	390 A	54 kV
2000…3000 m	80026-008-02	Blue	380 A	48 kV
3000…4000 m	80026-009-02	Black	370 A	42 kV
4000…5000 m	80026-010-02	Olive	360 A	36 kV

IMPORTANT A contactor only functions properly in the altitude range for which it is set up. If functional tests are required, they must be performed at the proper altitude or in a pressure chamber that simulates the proper altitude.

Troubleshooting

Troubleshooting and Contactor Coil Resistance

If an operating problem occurs, use the following troubleshooting chart to isolate the cause of the failure and find corrective action. If the corrective action fails to resolve the problem, consult your Rockwell Automation field support representative.

Table 11 - Troubleshooting

Symptom	Possible Cause	Actions
Contactor Chatters(1)	• Loose connections in control circuit • Coil leads reversed • Control voltage too low • Foreign material on contactor magnet pole face • Improper set-up of contactor auxiliary contact assembly • Faulty auxiliary contacts • Faulty CR1 or CR2 interposing relay (mechanical latch only) • Faulty IntelliVAC or IntelliVAC Plus • Latch does not engage • Incorrect style of CR1 and/or CR2 used with relay controlled contactor	• Check all connections in control circuit for tightness • Check wiring from the coil to the terminal block assembly • Measure control voltage. See Contactor Specifications for minimum pick-up voltage • Clean magnet cores and armature • Check set-up of contactor auxiliary contact assembly. • Check master contact cartridges on contactor • The N.C. contact from contactor auxiliary assembly must be wired to auxiliary input on IntelliVAC or IntelliVAC Plus • Replace IntelliVAC or IntelliVAC Plus control module • Check adjustment of mechanical latch • Only use approved Rockwell Automation control relay panels on relay-controlled contactors.
Coil Burnout	• Coil leads improperly wired • Faulty IntelliVAC or IntelliVAC Plus control module(2) • Improper set-up of contactor auxiliary contact assembly(1) • Control voltage too high(2)	• Check wiring from the coil to the terminal block assembly • Replace IntelliVAC or IntelliVAC Plus control module(2) • Check set-up of contactor auxiliary contact assembly(1) • Check for correct control voltage(1)
Contactor does not energize	• Loose connections in control circuit • Damaged contactor auxiliary contacts • Control voltage too low • Improper set-up of contactor auxiliary contact assembly • Faulty CR1 or CR2 interposing relay(1) • Faulty IntelliVAC or IntelliVAC Plus control module(2)	• Check all connections in control circuit for tightness. Check wiring from the coil to the terminal block assembly • Replace contactor auxiliary contact assembly • Measure control voltage. See Contactor specifications for minimum pick-up voltage • Check set-up of contactor auxiliary contact assembly • Check CR1 and CR2 relay(1) • Check IntelliVAC or IntelliVAC Plus status LEDs(2)

(1) Valid if mechanical latch contactors are controlled with electromechanical circuit only.

(2) Valid if IntelliVAC or IntelliVAC Plus control module is used (see 1503-UM053 and 1503-UM054).

If faulty contactor coils are the suspected cause of malfunction, see Table 12 for typical coil resistance values and check the contactor coils.

Table 12 - Typical Contactor Coil Resistance Values

Coil Part Number	Description	DC resistance (Ω)(1)
80026-230-01	Operating Coil (each)	19.2 (9.6 x 2)
80022-067-01(2)	Mechanical Latch Trip Coil	17.6

(1) Resistance values that are listed have a tolerance of ±10%. See page 21 for measurement points at the contactor receptacle.
(2) Supplied only with mechanical latch option.

Notes:

Spare Parts

Bulletin 1502 Spare Parts Diagrams and Chart

Figure 40 - Bulletin 1502, 400 A Electrically Held Vacuum Contactor

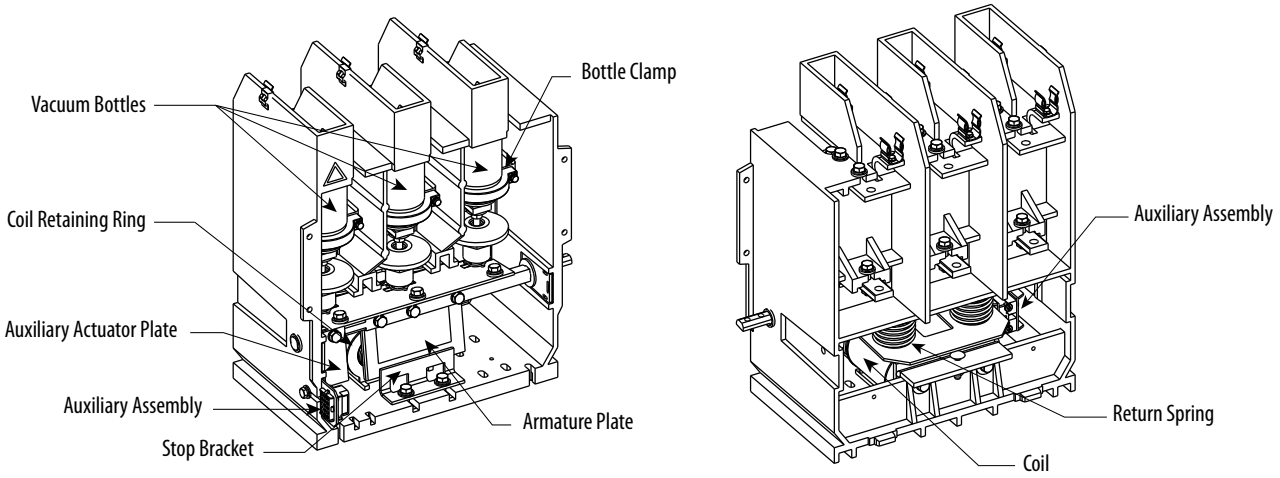

Figure 41 - Bulletin 1502, 400 A Mechanical Latch Assembly

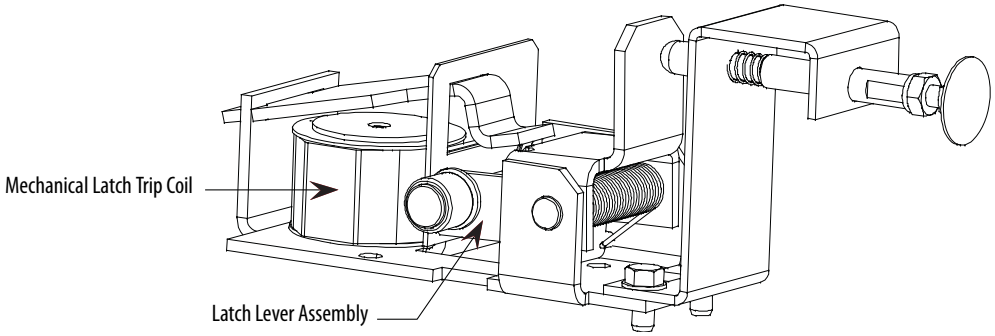

Table 13 - Spare Parts

Item	Description of Parts (Based on control voltage of 120V, unless noted otherwise)			Part Number	Recommended Quantity
1	Main pull-in and hold-in coils, two required(1)			80026-230-01	2
2	Pull-in coil(2)			80153-576-51	1
3	Pull-in coil, 230V(3)			80153-576-52	1
4	Hold-in coil(3)			80153-575-51	1
5	Hold-in coil, 230V(3)			80153-575-52	1
6	Pull-in coil, mechanically latched, relay controlled(3)			80154-134-51	1
7	Coil retaining ring			28325-042-01	2
8	Trip coil (120V AC), mechanically latched contractor			80022-067-01	1
9	Auxiliary contact assemblies(4)	120V relay controlled	Electrically held contactor(4)(5)	80153-554-52	1
10			Electrically held contactor(4)(6)	80153-554-56	1
11	Auxiliary contact assemblies(5)	230V relay controlled	Electrically held contactor(4)(6)	80153-554-59	1
12			Electrically held contactor(4)(7)	80153-554-60	1
13	Auxiliary contact assemblies(5)	120V relay controlled	Mechanically latched contactor(4)	80158-744-54	1
14			Not available	—	—
15	Auxiliary contact assemblies(5)	IntelliVAC or IntelliVAC Plus Controlled	Electrically held contactor(2)	80158-743-52	1
16			Mechanically latched contactor(2)	80158-744-52	1
17	Auxiliary contact plastic actuator tip			40274-084-01	2
18	Return spring (standard altitude 0…1000 m)(7)			80153-567-01	2
19	Roller flapper latch lever assembly			80158-768-51	1
20	Contactor set up tool			80154-149-51	1

(1) For contactors controlled by IntelliVAC or IntelliVAC Plus.

(2) For contactors controlled by electromechanical relay control panel.

(3) For mechanically latched contactors controlled by electromechanical relay control panel.

(4) For contactors controlled by electromechanical relay control panel.

(5) For Normal drop-out time ("A" or "B" in the sixth position of the Catalog Number Explanation on page 12).

(6) For Fast drop-out time ("C" in the sixth position of the Catalog Number Explanation on page 12).

(7) See Table 10 on page 50 for Return Spring part number for higher altitude contactors (if mechanical latch contactors are used without IntelliVAC or IntelliVAC Plus control).

Numerics

1503C-XXX 11
1503E-CXXX 11

A

AC hi-pot test 18
actuator 38
plate removal 45
additional resources 6
altitude
adjustment 50
capability 15
code 12
derating 16
spring requirements 50
armature plate 9, 38, 40
auxiliary
actuator 38
contact rating 15
contact set up 40

B

basic impulse rating 50
bill of lading 17

C

capacitor switching 15
catalog number 7
explanation 12
cathode ray tube effect 20
certifications 16
clamping fixture 40
cleaning 36
closing coil 9, 11
closing time 15
coil
access 39
burnout 51
closing 9
faulty 51
hold-in 9
removal 39
replacement procedure 38
resistance values 51
specifications 14
trip 44
coil voltage 12
contactor
certifications 16
cleaning 36
description 7
dimensions 21
dropout times 12
electrically held vacuum contactor 10
handling 17
identification 11
inspection 37
maintenance 35
mounting 21
opening and closing times 15
rating label 11
specifications 13
storage 18
weight 15
CR1 9
current rating 13

D

DC hi-pot test 20
DC resistance 51
derating 16
description 7
diagrams
schematic 24
wiring 24
dropout times 12

E

electrical connections 22
electrical life 14
electrically held contactor operation 9
electromechanical relay controlled contactors 9
IntelliVAC controlled 9
IntelliVAC Plus controlled 9
electrically held vacuum contactor
diagram 10
part description 10
electromechanical relay controlled contactor 10

F

forklift 17
front stop bracket 38

G

grease location 38
ground wire 40

H

hi-pot
- AC test 18
- DC test 20
- procedure 18

hold-in coil 9
holding coil 11

I

identification 11
inspection 17, 37
- pre-energization 18

installation 22
insulation resistance test 20
integrity test 18, 19
IntelliVAC
- mechanically latched 10

interrupters
- description 7

L

low voltage control panel 22

M

main pilot relay (CR1) 9
maintenance 35
- cleaning 36
- inspection 37
- torque requirements 36

mechanical life 14
mechanically latched contactor 10
- operation 10
- set up 48

mounting 21
- details 21

O

opening time 15

R

rating label 11
receiving 17
relay control panel
- 1503C-XXX 11
- 1503E-CXXX 11

required tools 35
resistance values 51
retaining tabs 21

S

schematic diagrams 24
series letter
- electrically-held contactors 7
- IntelliVAC 8
- location 7
- mechanical-latch contactors 7

specifications 13
storage 18
switching frequency 14

T

TCO 10
temperature
- storage 18

tools 35
torque requirements 36
trip coil 11, 44
troubleshooting 51

V

vacuum bottle
- arc shield 8
- contacts 8
- cross section 8
- description 7
- integrity test 18

voltage rating 13

W

weight 15
wire harness 22
wiring diagrams 24

Rockwell Automation Support

Use the following resources to access support information.

Technical Support Center	Knowledgebase Articles, How-to Videos, FAQs, Chat, User Forums, and Product Notification Updates.	https://rockwellautomation.custhelp.com/
Local Technical Support Phone Numbers	Locate the phone number for your country.	http://www.rockwellautomation.com/global/support/get-support-now.page
Direct Dial Codes	Find the Direct Dial Code for your product. Use the code to route your call directly to a technical support engineer.	http://www.rockwellautomation.com/global/support/direct-dial.page
Literature Library	Installation Instructions, Manuals, Brochures, and Technical Data.	http://www.rockwellautomation.com/global/literature-library/overview.page
Product Compatibility and Download Center (PCDC)	Get help determining how products interact, check features and capabilities, and find associated firmware.	http://www.rockwellautomation.com/global/support/pcdc.page

Documentation Feedback

Your comments will help us serve your documentation needs better. If you have any suggestions on how to improve this document, complete the How Are We Doing? form at http://literature.rockwellautomation.com/idc/groups/literature/documents/du/ra-du002_-en-e.pdf.

Rockwell Otomasyon Ticaret A.Ş., Kar Plaza İş Merkezi E Blok Kat:6 34752 İçerenköy, İstanbul, Tel: +90 (216) 5698400

www.rockwellautomation.com

Power, Control and Information Solutions Headquarters

Americas: Rockwell Automation, 1201 South Second Street, Milwaukee, WI 53204-2496 USA, Tel: (1) 414.382.2000, Fax: (1) 414.382.4444
Europe/Middle East/Africa: Rockwell Automation NV, Pegasus Park, De Kleetlaan 12a, 1831 Diegem, Belgium, Tel: (32) 2 663 0600, Fax: (32) 2 663 0640
Asia Pacific: Rockwell Automation, Level 14, Core F, Cyberport 3, 100 Cyberport Road, Hong Kong, Tel: (852) 2887 4788, Fax: (852) 2508 1846

Publication 1502-UM052J-EN-P - December 2017
Supersedes Publication 1502-UM052I-EN-P - January 2016