ALLEN-BRADLEY/STROMBERG

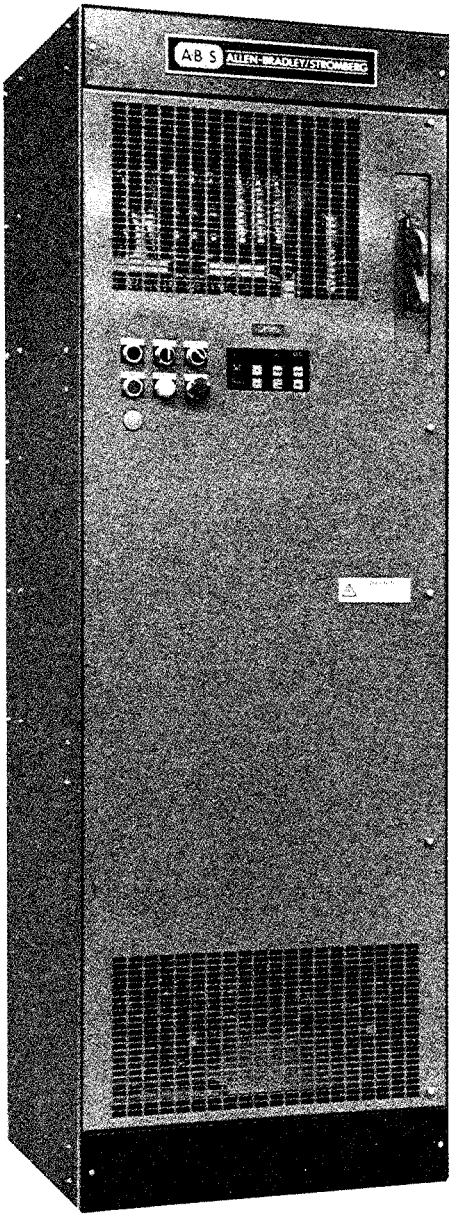

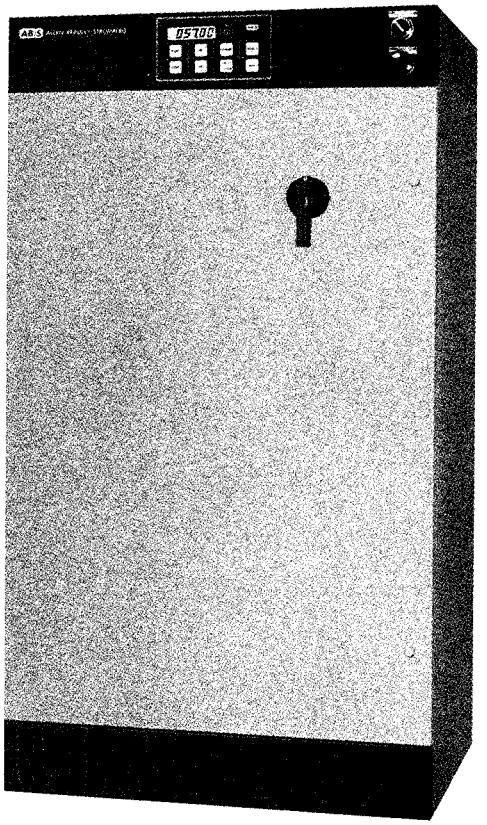

Bulletin 1352 Digital AC Drive Series A & B
Instruction & Maintenance Manual

Important User Information

Because of the variety of uses for this equipment and because of the differences between this solid state equipment and electromechanical equipment, the user of and those responsible for applying this equipment must satisfy themselves as to the acceptability of each application and use of the equipment. **In no event** will Allen-Bradley Company be responsible or liable for indirect or consequential damages resulting from the use or application of this equipment.

The illustrations shown in this manual are intended solely to illustrate the text of this manual. Because of the many variables and requirements associated with any particular installation, the Allen-Bradley Company **cannot** assume responsibility or liability for actual use based upon the illustrative uses and applications.

No patent liability is assumed by Allen-Bradley Company with respect to use of information, circuits or equipment described in this text.

WARNINGs tell readers where people may be hurt if procedures are not followed properly.

CAUTIONs tell readers where machinery may be damaged or economic loss can occur if procedures are not followed properly.

Both of these Reader Alerts:

- Identify possible trouble spots.
- Tell what causes the trouble.
- Give the result of improper actions.
- Tell the reader how to avoid trouble.

Repair or Repair/Exchange Procedure

For your convenience, the Allen-Bradley Company Drives Division, and the Allen-Bradley Company Customer Support Services Division, provide an efficient and convenient method of returning equipment eligible for repair or repair/exchange.

A **Product Service Report** (**P.S.R.**) number is required to return any equipment for repair. This may be obtained from your local Allen-Bradley Distributor, Sales Office or Area Support Center.

Return any equipment to be repaired to the Area Support Center nearest you. Be sure to reference the P.S.R. number on the carton and packing slip. Include your company name and address, your repair purchase order number, and a brief description of the problem. This will facilitate quick return of your equipment.

A complete listing of Area Support Centers may be found in Publication CSS GI 1.1 or by calling your local Allen-Bradley Distributor or Sales Office.

Table of Contents

Chapter	
1	GENERAL INFORMATION
2	INSTALLATION INSTRUCTIONS
3	FUNCTIONAL DESCRIPTION
4	START - UP
5	PREVENTATIVE MAINTENANCE
6	SUPERVISION and VISUAL WARNING
7	TROUBLESHOOTING
8	RECOMMENDED SPARE PARTS
9	REFERENCE DOCUMENTS
10	SERVICE NOTES

GENERAL INFORMATION

TABLE OF CONTENTS
Chapter 1
General Information

SECTION		PAGE
1-1 : Purpose of Manual		**1**
1-2 : Description of Equipment		**1**
1-3: Protective Features		**1**
1-3.1	Instantaneous Overcurrent Protection	1
1-3.2	Short Circuit Protection	1
1-3.3	Fast Acting Supply Fuses	1
1-3.4	Supply Voltage Phase Loss	1
1-3.5	Intermediate DC Circuit Under and Overvoltage	2
1-3.6	Semiconductor Overtemperature	2
1-3.7	Semiconductor Fault Protection	2
1-3.8	Processor Fault	2
1-3.9	Protection Options	2
1-4 : Safety		**2**
1-4.1	Introduction	2
1-4.2	Operation	2
1-4.3	Maintenance Work	2

Section

1

BULLETIN 1352 GENERAL INFORMATION

1.1 Purpose Of Manual

This manual has been prepared by the Technical Publications staff of Allen-Bradley Company, Drives Division and is intended for use by personnel familiar with the functions of solid-state drive equipment.

1.2 Description Of Equipment

The Bulletin 1352 AC Drive converts 3 phase, 60 Hz input power to an adjustable AC frequency and voltage source for controlling the speed of AC squirrel cage motors. The Bulletin 1352 is available in ratings from 30 KVA to 730 KVA at 460V AC input (140 to 830 KVA at 575 AC input). The output voltage varies proportionally with the output frequency to maintain a constant volts/Hz value from 0 Hz to 200 Hz.

Important : Unless specified, standard drives are shipped with the maximum frequency set at 60 Hz. Do not set the maximum frequency to a value which can exceed the speed capability of either the motor or load.

The standard Drive includes power conversion components, power and control logic devices and regulator circuitry. A microprocessor is used to control the Drive regulators and power semiconductors which generate a pulse width modulated (PWM) output waveform. Fault detection circuits utilizing numerical displays are provided for fault indication. All components are mounted in a NEMA Type 1 enclosure sized to dissipate the heat generated by the control within the limits of the specified environmental and service conditions. NEMA Type 12 enclosures with closed loop air conditioning are available as options in ratings to 290 KVA.

1.3 Protective Features

1-3.1 **Instantaneous Overcurrent Protection** - This circuit monitors the positive and negative peaks of the output phase currents. If the harmonic peaks exceed 2.3 times rated drive current, the unit is shut down. The active current limit will not provide protection as the phase current limit, since currents resulting from short circuits or excessive harmonics are comprised of reactive current.

1-3.2 **Short Circuit Protection** - All transistors are monitored for gate characteristics, and if a fault is detected the transistors are shut off to prevent damage to the drive . On larger horsepower GTO equipped drives, if a major fault occurs, all thyristors are gated off.

1-3.3 **Fast Acting Supply Fuses** - The power conversion section of the Bulletin 1352 AC Drive is protected by supply fuses which offer very fast protection in relation to the heating time constant of the rectifier components.

1-3.4 **Supply Voltage Phase Loss** - Loss of one phase will interrupt the control circuit and cause the main contactor to open.

1-3.5 **Intermediate DC Circuit Under And Overvoltage Protection** - The DC Intermediate Circuit voltage is constantly monitored for under and overvoltage conditions, since an undervoltage reduces the current handling capability of the drive. The current limit is dependent on the actual value of the DC voltage. If the DC Intermediate Circuit voltage drops below 70%, the drive will shut down. The overvoltage limit is set at 130% to prevent damage to the intermediate circuit, in the event excessive input voltage is applied or when power is generated by the motor during rapid deceleration.

1-3.6 **Semiconductor Overtemperature** - If the temperature of the semiconductor heatsinks reach 90degrees C, temperature sensors fitted on the heatsinks will produce an open circuit and cause the drive to shut down.

1-3.7 **Semiconductor Fault Protection** - On startup, the control logic checks the semiconductor operation. If a fault is detected, the location of the malfunction is shown on the control panel and start-up is inhibited.

1-3.8 **Processor Fault** - If an error in the microprocessor operation is detected, the drive stops.

1-3.9 **Protection Options** - Additional protective features can be added to the Bulletin 1352 to provide motor thermal overload protection, ground fault protection and stall protection.

1.4 Safety

1-4.1 Introduction

WARNING: Only qualified personnel familiar with the Bulletin 1352 - AC Drive and its associated machinery should plan or implement the installation, start up and subsequent maintenance of the Drive. Failure to comply may result in personal injury and/or equipment damage.

The Drive is designed to give adequate circuit protection not only to circuits connected to it but also the integral circuits. Circuit protection parameters must not be altered. Failure to observe this instruction may compromise the safety of the system and invalidate any warantees.

Recognized safety regulations must be observed in the installation, start-up and maintenance work. Refer to NFPA 70E, Electrical Safety Requirement for Employee Workplaces, for installation safety requirements and general requirements for electrical installation.

1-4.2 **Operation** - The operation of the Drive should be the responsibility of personnel who are familiar with its basic functions. The operator should be informed of the significance of the Numeric Displays on the Control Panel. In case of a panel alarm indication, possibly followed by tripping, the operator must be able to decide whether the Drive should be removed from operation or whether it should be restarted after resetting the alarm.

1-4.3 **Maintenance Work** - All maintenance of the Drive must be done by an experienced electrician, familiar with both the drive and solid state electronics.

WARNING: The following points must be observed before any work is begun on the Drive:

A. If the Drive is equipped with bypass equipment, supply voltage may also be fed back to the Drive cabinet through the output terminals.

B. Since all semiconductors exhibit leakage current, the circuits of the Drive should be regarded as live until the Drive has been isolated from the supply voltage(s) by disconnectors/isolating switches and it has been verified that there are no voltages present.

C. The large capacitors in the Intermediate DC Circuit may take as much as 3 minutes to discharge to a low magnitude voltage. However, a power capacitor with even a small charge remaining is potentially lethal. A properly sized discharge circuit is incorporated in all drives and should not be modified.

WARNING: Discharging a voltage as low as 20 V by shorting the capacitors still causes a considerable discharge current.

D. To verify that no voltage is present, a measurement must be taken at the intermediate D.C. bus (see Fig. 3-17 for test point and component locations). The measurement should be made starting with the 1000V DC range of a multimeter, then switching to lower voltage ranges as voltage level permits to prevent over-range readings.

E. Many voltage testers are unsuitable for checking the Intermediate DC Circuit voltage, because they do not respond to voltages below approximately 100 V.

F. The motor terminals are live even if the motor is not running, as long as the main circuit of the Drive is live.

WARNING: When Voltage is supplied to the inverter a potentially Fatal Voltage is present between the cards and the inverter chassis!
Servicing energized industrial control equipment can be hazardous. Severe injury or death can result from electrical shock, burn or unintended actuation of controlled equipment.
Recommended pratice is to disconnect and lock out control equipment from power sources and discharge stored energy in capacitors, if present. If it is necessary to work in the vicinity of energized equipment, only qualified personnel should be permitted to perform such work, using all applicable safety practices and protective equipment.
Do not remove the aluminum and plastic protection panels needlessly during fault tracing. This is usually unnecessary and can expose the personnel to potential hazards from voltage sources present in the unit. Always replace protective panels before operating the unit.

INSTALLATION INSTRUCTIONS

TABLE OF CONTENTS
Chapter 2
Installation

SECTION		PAGE
2-1 : Unpacking & Inspection		**1**
2-2 : Transportation & Handling		**1**
2-3: Installation Site		**2**
2-4 : Mounting		**3**
2-4.1	Standard 52 Inch NEMA 1	3
2-4.2	Standard 90 Inch NEMA 1 & 12	4
2-5 : Interconnections		**7**
2-5.1	Power Wiring	7
2-5.2	Control Wires	7
2-5.3	Interference Suppression	8
2-5.4	Grounding	8
2-6 : Losses and Ventilation / Air Conditioning Requirements		**9**
2-7 : Optional Features		**10**
2-7.1	Bypass Devices	10
2-7.2	NEMA 12 Air - Conditioned Units	11
2-7.3	Dynamic Braking Unit	12

Section

2

BULLETIN 1352 INSTALLATION

2.1 Unpacking & Inspection

After unpacking the material, check the item(s) received against the bill of lading to assure that the nameplate description of each item agrees with the material ordered. Inspect the Bulletin 1352 AC Drive Controller and the other equipment for physical damage. As stated in the Allen-Bradley / Stromberg Terms and Conditions of Sale.

Important: All claims for breakage and damage whether concealed or obvious must be made to the carrier by the Customer as soon as possible after receipt of the shipment. The Allen-Bradley Company will be glad to render the Customer reasonable assistance in the securing of adjustment for such damage claims.

Remove all packing material, wedges, or braces from within the drive controller. Operate the contactors and relays manually to assure that they operate freely. If any part of the equipment will not be installed when it is unpacked, it should be stored in a clean, dry place. The storage temperature must be between -40°C (15°F) and 70°C (165°F) with a maximum humidity of 90%, non-condensing to guard against damage to temperature sensitive components of the controller.

2.2 Transportation & Handling

The Bulletin 1352 AC Drive must be transported on a pallet built under it as shown in Figure 2-1. When using a fork-lift truck or manual pump truck, a transportation pallet or a fork-lift pallet must be used. Round rollers can be used to assist in moving the Drive to the installation site. Once at the final site, the pipe rolling technique can be used to place the cabinet in the desired position.

WARNING: Care must be exercised when using a fork-lift or the pipe rolling technique for positioning purposes to ensure that the equipment is not scratched, dented or damaged in any manner. Always exercise care to stabilize the Drive during handling to guard against tipping and injury to personnel.

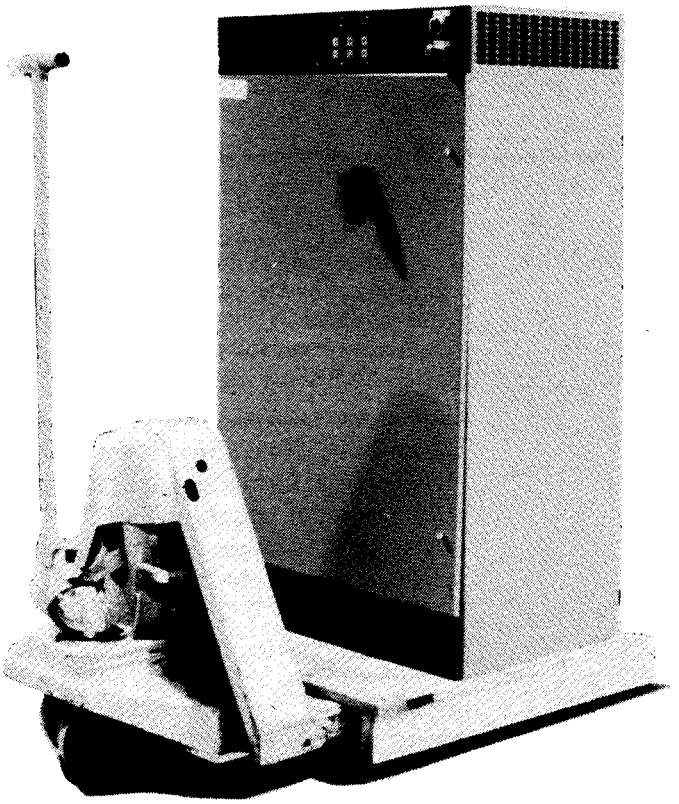

Figure 2-1. Moving the 1352 Drive on a pallet

CAUTION : To guard against damaging the structure of the cabinet, do not position forks directly below the bottom rails. Always use a pallet !

2.3 Installation Site

WARNING : The National Electrical Code (NEC) or local codes outline provisions for safely installing electrical equipment. Installation MUST comply with specifications regarding wire type, conductor sizes, branch circuit protection, and disconnect devices. Failure to do so may result in personal injury and/or equipment damage.

The Standard Bulletin 1352 AC Drive is mounted in a NEMA Type 1 ,Type 1A or Type 12 enclosure and can as such be placed in suitable spaces other than electrical equipment rooms. When choosing the installation site, the following conditions should be considered:

A. The operating ambient temperature must be between 0°C (32°F) and 40°C (104°F) for NEMA Type 1 or 1A enclosures. For NEMA Type 12 enclosures, the operating ambient temperature must be between 0° C (32°F) and 50°C (122°F).

B. The relative humidity must not exceed 95% non-condensing. Excessive humidity can cause corrosion or excessive dirt build-up leading to possible electrical problems.

C. The equipment should be kept clean. Dust build-up inside the enclosure inhibits proper cooling and decreases the system reliability.

D. Only persons familiar with the function of the Drive must have access to the equipment.

E. The losses in the Drive produce a definite heat dissipation depending on unit size that tends to warm the air in the room.

F. Operational altitude is 3300 ft. (1km) maximum.

CAUTION: An incorrectly applied or installed drive can result in component damage or a reduction in product life. Wiring or application errors, such as, undersizing the motor, incorrect or inadequate AC supply, or ambient temperatures above or below specified temperature range may result in malfunction of Drive.

2.4 Mounting

2-4.1 Standard NEMA Type 1 "52 inch" Enclosure - The standard enclosure (30 - 115 KVA) is of welded construction 12 gauge steel painted ASA 49 Grey. The cabinet (Figure 2-2) is usually wall mounted.

The incoming supply cables and control cables can enter from above or below the enclosure. The motor supply terminals are located at the lower left. For further details , refer to the Interconnection drawing in Section IX entitled "Reference Documents".

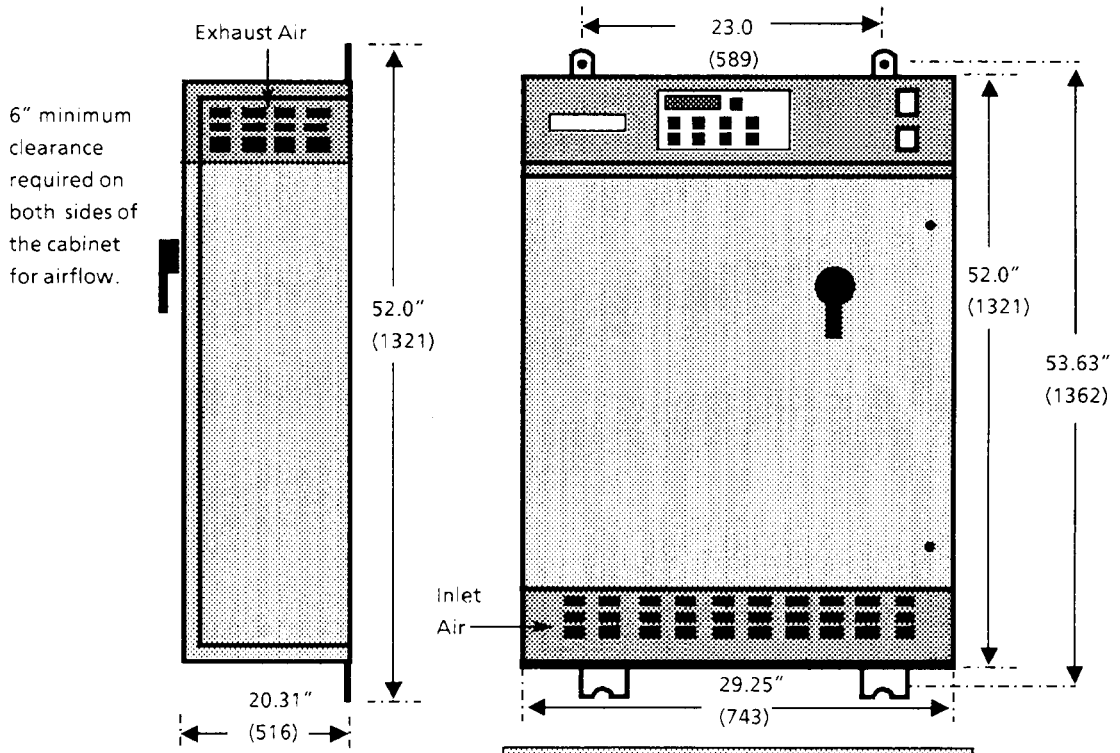

Approx. Weight lbs (kg.)	
30KVA	270 (123)
50KVA	270 (123)
75KVA	390 (177)
115KVA	410 (186)

Figure 2-2. 30 - 115 KVA Standard NEMA Type 1 Enclosure

2-4.2 Standard 90" NEMA Type 1 and Type 12 Enclosures - 90" cabinet units (Figure 2.3) are standard for 180KVA and larger drives and optional for smaller drives. These enclosures are of bolted construction 12 gauge steel painted ASA 49 grey.

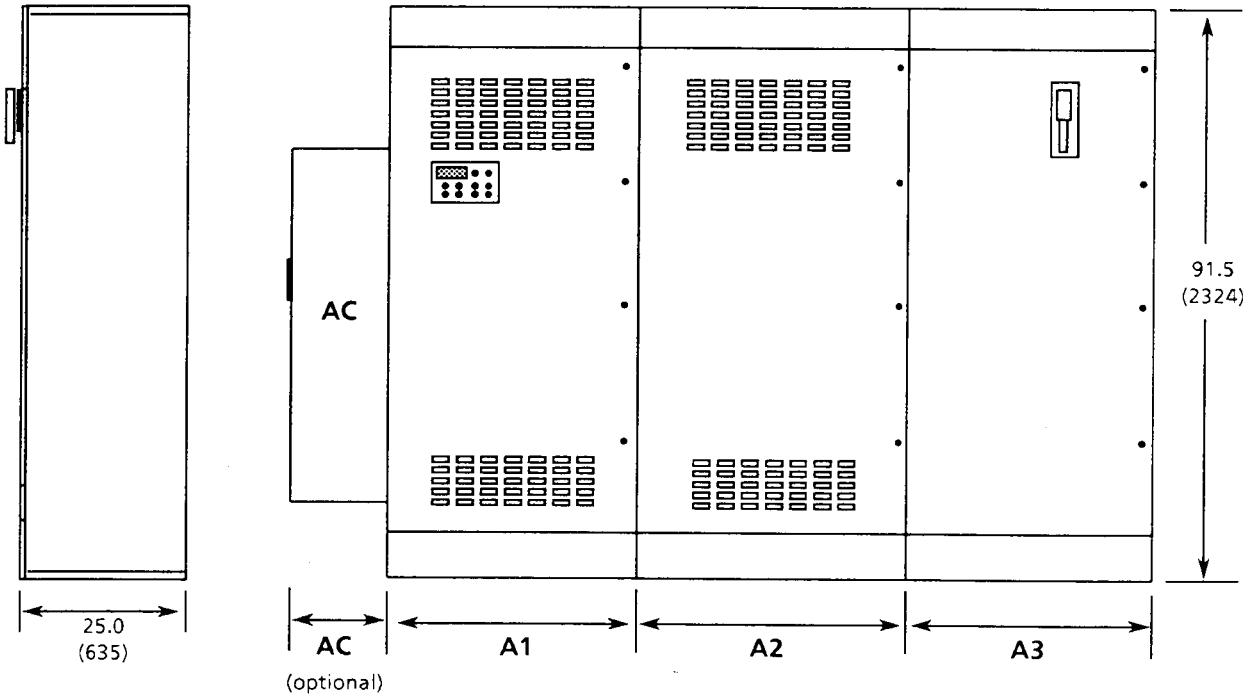

	Approx.Weight lbs
30KVA	410
50KVA	410
75KVA	525
115KVA	590
180KVA	1000
290KVA	1500
460KVA	2000
730KVA	2500

WIDTH	KVA				
	30 - 115*	180	290	460	730
A1	30" (762)	35" (889)	30" (762)	30" (762)	25" (635)
A2					30" (762)
A3			25" (635)	35" (889)	25" (635)
AC NEMA Type 12	10.4" (264)	12.9" (327)	12.9" (327)		

Figure 2-3. 30 - 730 KVA Nema Type 1 and Nema Type 12 Enclosures

90 inch units are designed for cable entrance at the top far right bay (Fig, 2-4) and exit at the bottom far left bay as shown in Figures 2-5 & 2-6. Consult the Drives Division if other cable routings are required.

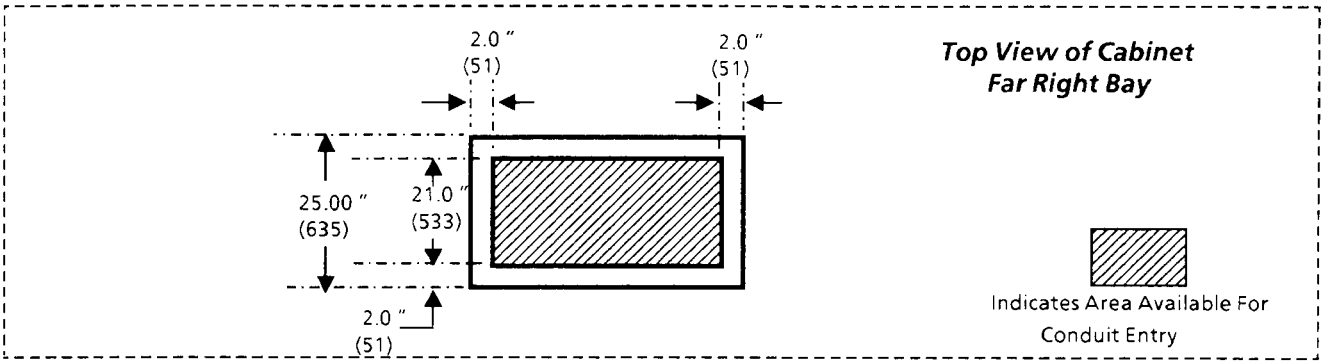

Figure 2-4. Conduit Entrance Dimensions

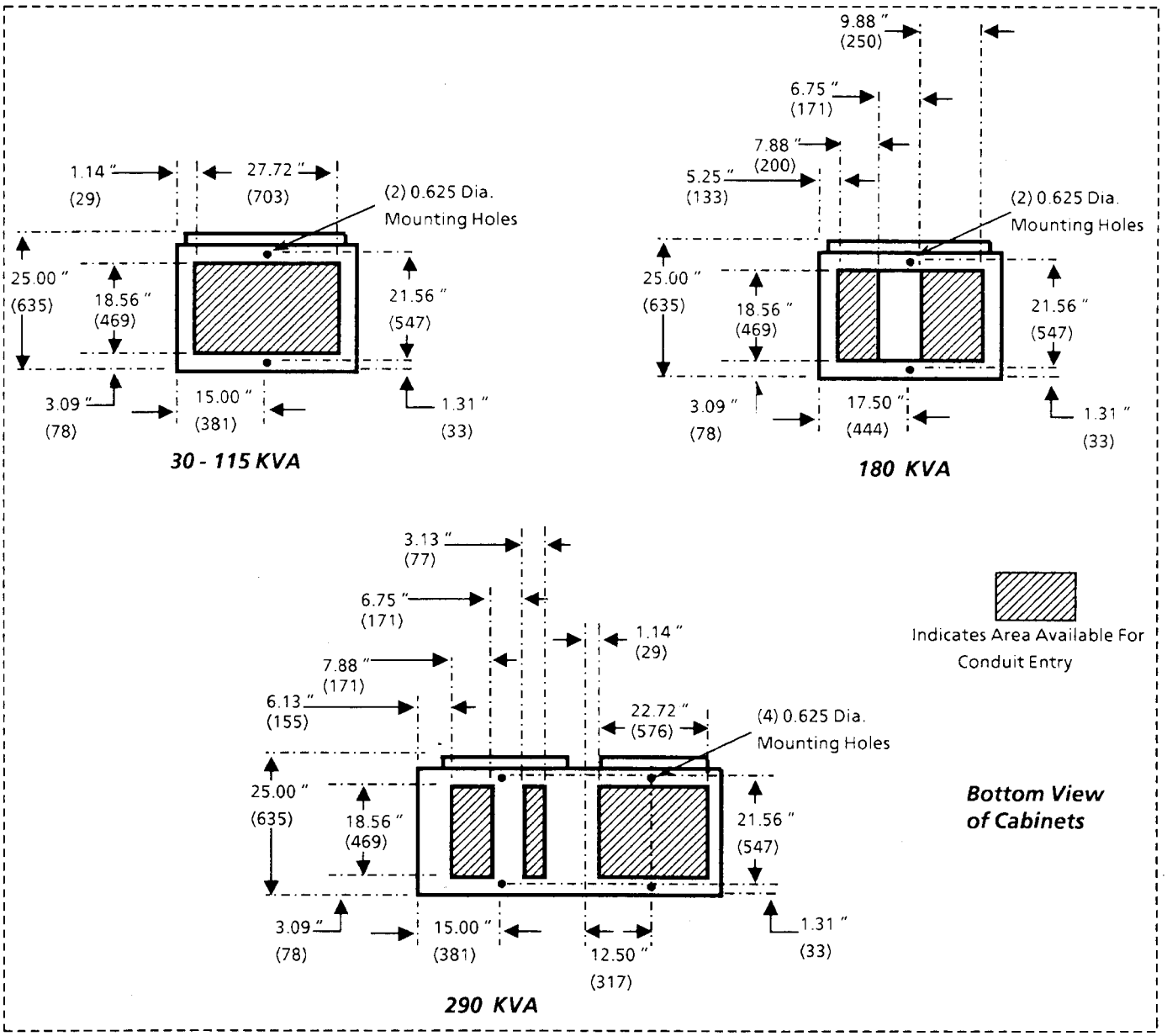

Figure 2-5. 30 - 290 KVA Conduit Exit Dimensions

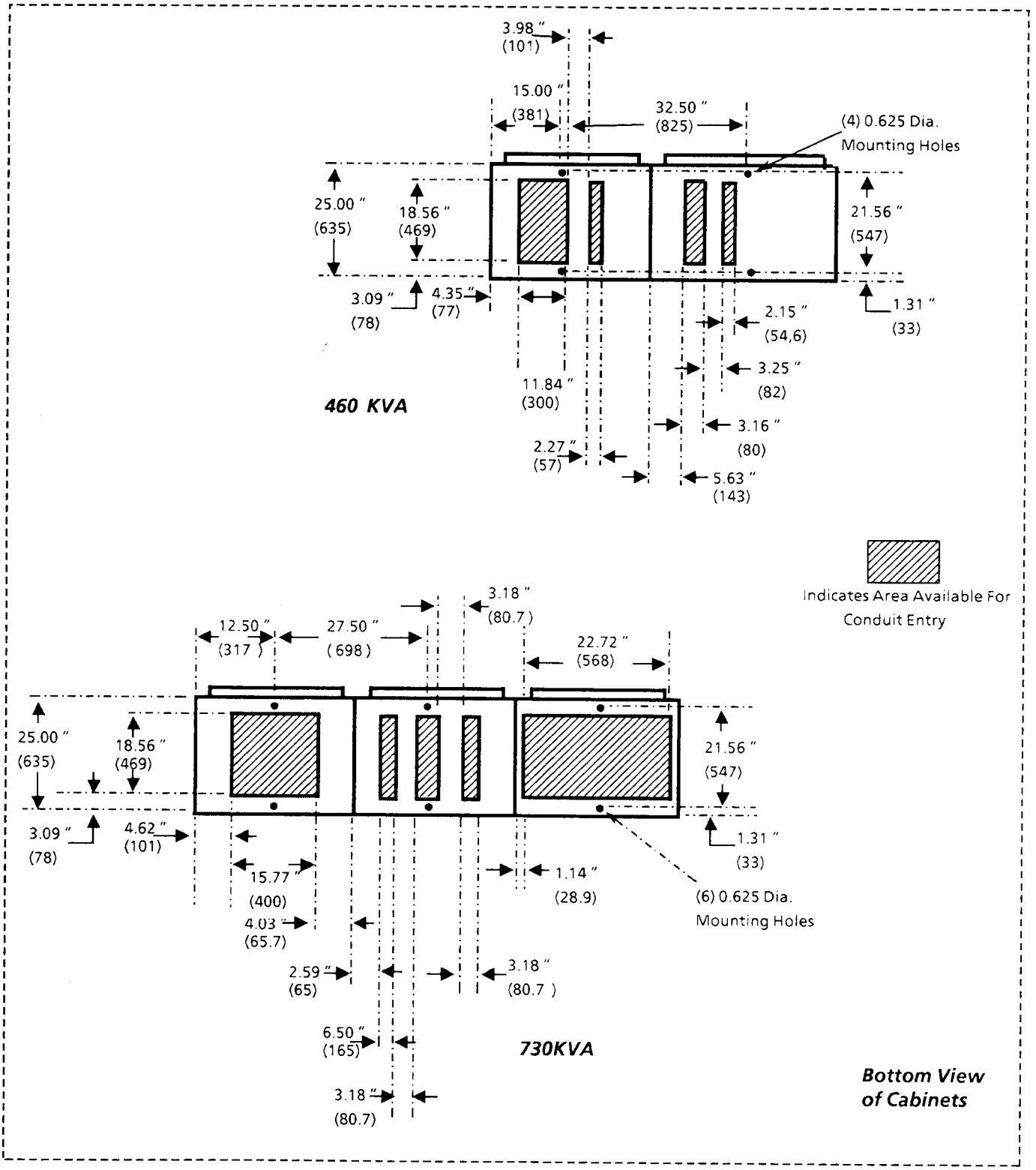

Figure 2-6. 460 - 730 KVA Conduit Exit Dimensions

2.5 Interconnections

2.5.1 **Power Wiring** - The Drive requires a three-phase supply and an equipment grounding conductor to earth ground. A neutral conductor of the three-phase supply is not necessary and is usually not routed to the Drive. Three-phase wiring connects the Drive to the motor. The equipment grounding conductor for the motor originates at the Drive and connects to the motor frame. The Drive ground connects to the building ground (See Fig. 2-7).

The wire sizes must be selected individually, observing all applicable safety and N.E.C. regulations. The minimum permissible wire size does not necessarily result in the best operating economy. The recommended size for the wires between the Drive and the motor is the same as that used for the main voltage source connections to the motor. This arrangement is beneficial for the following reasons:

A. It will then be possible to add a bypass device in parallel with the Drive in future unit enhancement.

B. Harmonic currents contribute to heating of the wires.

The Drive also provides protection against short circuit and overload protection for the wires. Drives with several motors require individual consideration of the protection aspect and may require motor overload protection in accordance with Part C of Article 430 of the National Electrical Code. (Consult local codes for specified requirements.) Branch circuit fuses one size larger than drive fuses are recommended to minimize blowing the supply wire fuses in the event of a short. The ampacity of the branch circuit wiring must then be selected based on the branch circuit fuse rating. The 1352 internal fuses are detailed in Table 2-1.

Table 2-1 Internal Fuses of Bulletin 1352 Drive

Drive Type	Fuse/Amp	Rated Current Amps	Catalog No.
30 KVA 460 Volts	70 Amp, 700 Volt	38	1352 - HABN
50 KVA 460 Volts	70 Amp, 700 Volt	63	1352 - KABN
75 KVA 460 Volts	100 Amp, 700 Volt	94	1352 - MABN
115 KVA 460 Volts	150 Amp, 700 Volt	144	1352 - PABN
180 KVA 460 Volts	250 Amp, 500 Volt	232	1352 - RABN
290 KVA 460 Volts	400 Amp, 500 Volt	360	1352 - TABN
460 KVA 460 Volts	700Amp, 500 Volt	580	1352 - VABN
730 KVA 460 Volts	900 Amp, 700 Volt	926	1352 - YABN

WARNING: To guard against injury to the installer and operators or potential equipment damage, prior to attaching remote devices, the installer should become familiar with the information in Section 3. Specifically in Tables 3-1, 3-2 and 3-3 and in paragraph 3-2.4,10

2-5.2 **Control Wires**- A shielded type wire must be used in the control circuits for protection against interference . The recommended conductor cross-sections should be a minimum of 18 AWG (.05082 in). The best interference suppression is obtained with a wire having an individual shield for every pair.

Suitable Cable Types:

CABLE	MANUFACTURER
#2258 -3	ALPHA
#9365	BELDEN

The 24 VDC logic wiring should not exceed 10 cable feet from the drive terminal. If greater distances are to be run, it is advisable to utilize the 120VAC Interface Option.

WARNING: To avoid potential injury or equipment damage review Caution in section 3-2.7 if utilizing a two wire control scheme vs. the three wire scheme shown in the interconnection diagram.

Important: The control wires should be oriented at a distance of at least 150mm (6 inches) from power wires. Additional noise suppression practices (i.e. separate conduits for signal leads, logic wires and power conductors) are encouraged by Allen-Bradley Company, Drives Division.

2-5.3 **Interference Suppression** - Harmonic and noise voltage disturbances are present in the supply and output cables of the Bulletin 1352. The interference caused by the resulting currents can be reduced utilizing the following methods:

A. Use of cables with a concentric shielded ground conductor. Three-phase systems composed of three single-conductor cables should not be used.

B. Route the control cables as far away from the power cables as possible and avoid long parallel runs.

2-5.4 **Grounding** - The purpose of grounding in the main circuit is to limit dangerous voltages on exposed parts to ground and facilitate overcurrent device operation under ground fault conditions. Grounding in the control circuits also provides for electrical interference suppression.The grounding in the main circuit is usually arranged as shown in Figure 2-7. A star type grounding arrangement (Figure 2-8) is desirable in the control circuits. The shields of both the control input and output cables are connected to the TE terminal of the Connection Unit (A1-U1).

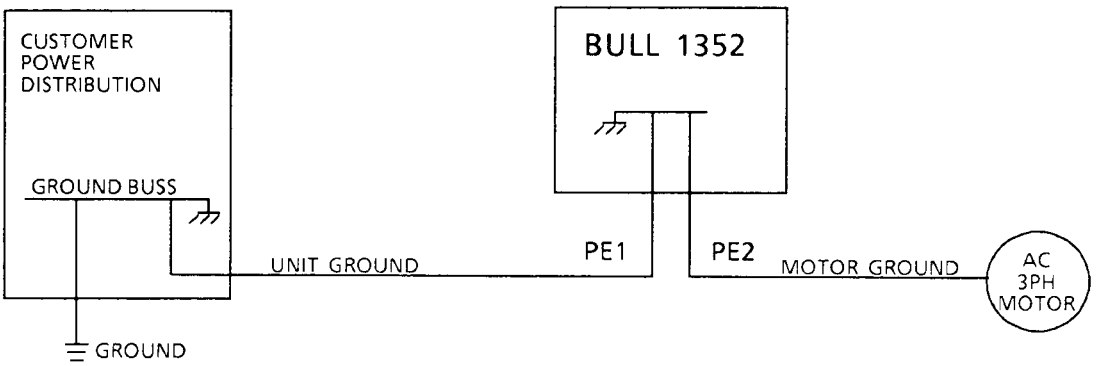

Figure 2-7. Main Circuit Grounding

Generally, grounding should be in accordance with the National Electric Code (NEC) and local codes.

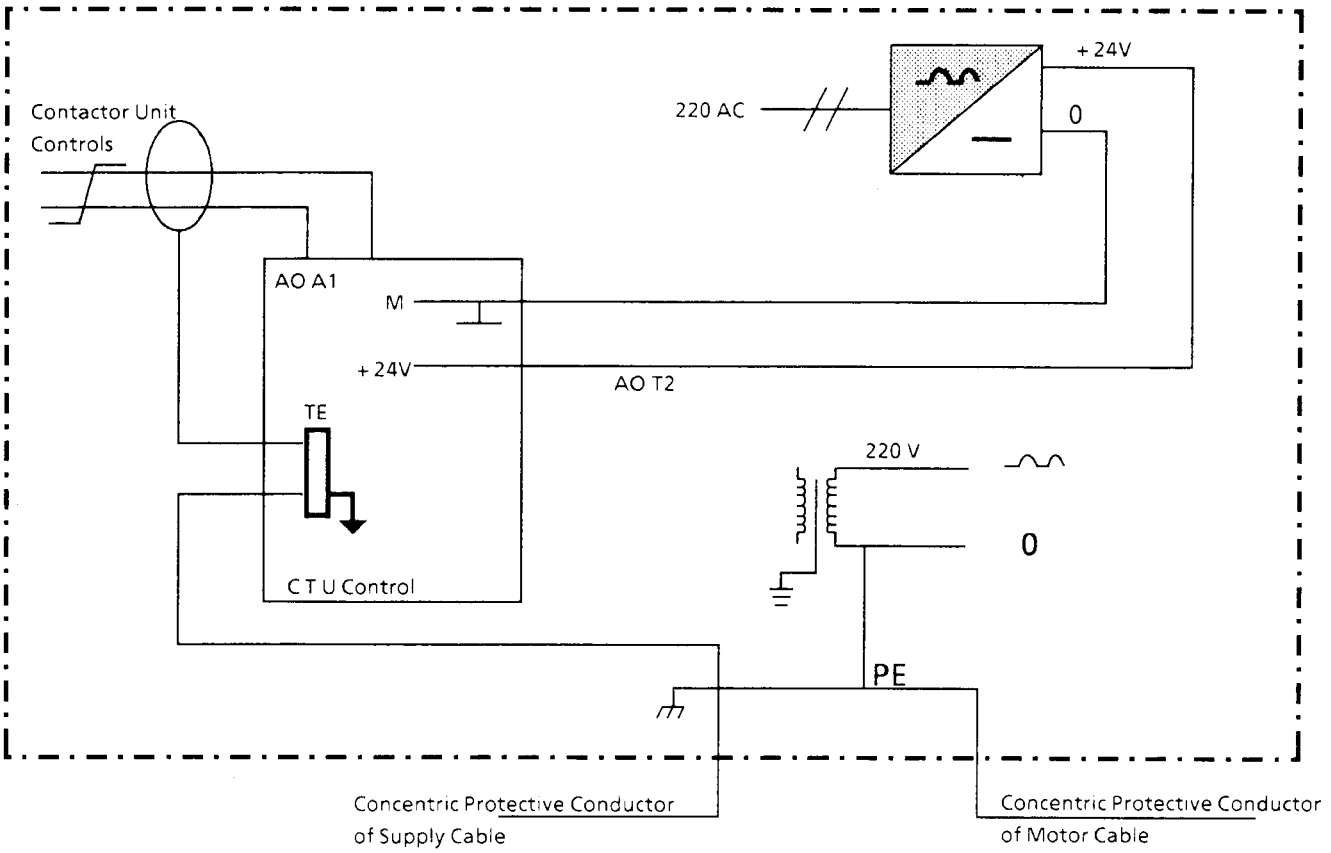

Figure 2-8. Control Circuit Grounding

2.6 Losses and Ventilation / Air Conditioning Requirements

The power losses experienced in the Drive are nominally less than 2 percent of the rated power. The Drive is air-cooled with air circulation provided by a cooling fan. On the standard 52 inch NEMA Type 1 cabinet,intake air is drawn through louvres at the front of the cabinet, near the bottom. The exhaust air is expelled through louvres on the top sides of the cabinet.The intake and exhaust air flow must not be obstructed by any objects or structures in front of the louvres. Allow a minimum clearance of three feet in front of the 1352 cabinet and six inches to each side.

The ambient temperature of the installation site must be between 0° and 40° C (32° to 105°F). In cases where restricted air flow or high temperatures are present, an air conditioned unit or air conditioning of the installation site may be required (see Table 2-2). Contact the Allen-Bradley Drives Division for assistance in determining the air conditioning requirements. The Bulletin 1352 is offered with an air-conditioned NEMA Type 12 cabinet in the sizes listed in Table 2-3.

TABLE 2-2. Minimum air flow requirements @ 25° C Ambient

BULLETIN 1352 RATING	MIN. AIR FLOW cu.ft./min.
30 - 50 KVA	100
75 - 115 KVA	190
180 KVA	360
290 KVA	635
460 KVA	1165
730 KVA	1525

TABLE 2-3. Standard NEMA 12 Air Conditioner Ratings

NEMA 12 BULLETIN 1352	AIR CONDITIONER
75 KVA	6000 BTU/HR
115KVA	10,000 BTU/HR
180KVA	14,000 BTU/HR
290KVA	19,000 BTU/HR

2.7 Optional Features

2-7.1 Bypass Devices

These devices can be used to by-pass the Drive in order to supply the motor(s) directly from the main voltage source. The use of the by-pass circuit requires that the driven machine be capable of operating without speed control and also be able to withstand direct main voltage source starting.

The standard Bulletin 1352 options include:

A. A disconnecting device (i.e. contactor or starter) located downline from the Bulletin 1352 for protection against back voltages. This provides protection against shock hazard for maintenance personnel while the by-pass connection is in use.

B. The incoming breaker and by-pass wiring are sufficiently large to permit direct main voltage source starting. (Minimum 14,000 Amperes interrupting capacity)

C. Control of the contactor(s) is electrically interlocked so that the supply voltage and the Drive's output voltages will not be connected in parallel.

D. We test for proper rotation of motor with power supplied by the Drive versus power supplied by the by-pass circuit.

CAUTION: To avoid damage to equipment, motor rotation should be checked while in the bypass mode. If adjustment is necessary, the drive input cables should be reconnected as appropriate. Do Not make correction by adjusting leads at the motor or output of the drive.

E. The bypass circuit is in accordance with the National Electrical Code .

The standard by-pass circuit is shown in Figure 2-9. With the Manual By-Pass Starter, single motor operation can be manually switched from the drive to a full voltage non-reversing starter. Overloads are supplied as standard on drive sizes up to 125 HP. The Automatic By-Pass Starter provides the same functions as the manual by- pass with the exception of transfer from drive to line operation being performed automatically under selected fault conditions.

If the motors are to be operated in both directions using direct main supply voltage, another contactor is required in parallel with K11.

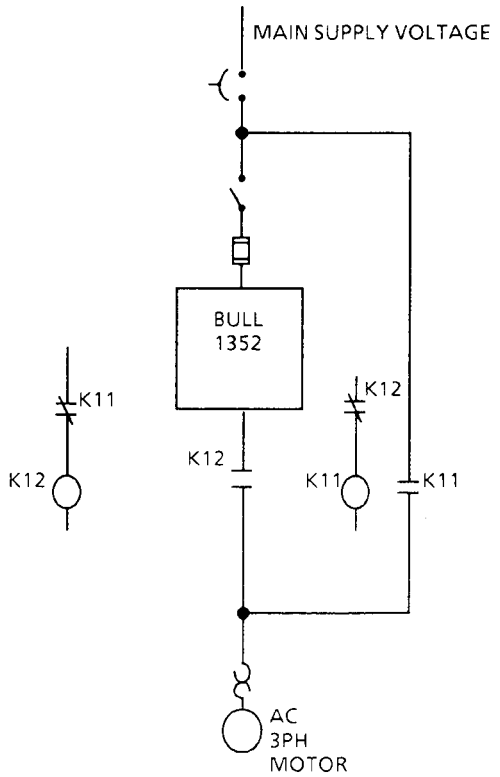

Figure 2-9. Standard By-pass Circuit

2-7.2 NEMAType 12 Air Conditioned Units

Units equipped with the optional air conditioning in a NEMA Type 12 cabinet will require a separate 460 volt 60HZ feed from the customers supply as shown in Figure 2-10.

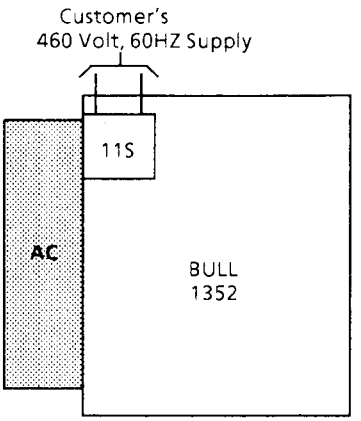

Figure 2-10. NEMA 12 Air Conditioning Hookup

2-7.3 Dynamic Braking Unit

On Bulletin 1352 units supplied with optional Dynamic Braking , the resistor unit should not be located more than 50 feet (15 meters) from the cabinet. The cables (Figure 2-11) to the Dynamic Braking resistor unit should be run in a single conduit with the + and - conductors tied closely together but not twisted . Additional Dynamic Braking Unit set-up adjustments are covered in Section 4-5 of this manual.

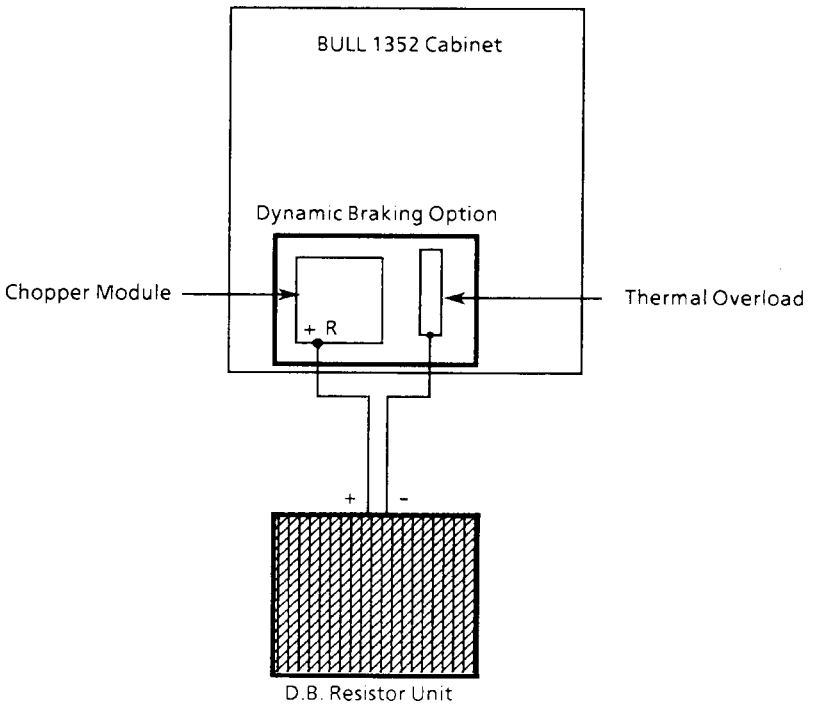

Figure 2-11. Dynamic Braking Unit Set-Up

FUNCTIONAL DESCRIPTION

TABLE OF CONTENTS
Chapter 3
Functional Description

SECTION		PAGE
3-1 : Introduction		**1**
3-2 : 1352 Drive Operation		**1**
3-2.1	Fundamental 1352 Drive Features	1
3-2.2	Construction of the Drive	8
3-2.3	Drive Component Descriptions	13
3-2.3.1	General	13
3-2.3.2	Disconnect	14
3-2.3.3	Control Panel	15
3-2.3.4	Contactor Unit CTU	15
3-2.3.5	Line Converter Unit LCU	16
3-2.3.6	Capacitor Bank Unit CBU	17
3-2.3.7	Inverter Unit INU	17
3-2.3.8	GTR Inverter	18
3-2.3.9	GTO Inverter	19
3-2.4	Circuit Card Descriptions	21
3-2.4.1	Control Card	21
3-2.4.2	Power Supply Card	24
3-2.4.3	GTR Pulse Amplifier Card	26
3-2.4.4	GTO Pulse Amplifier Card	27
3-2.4.5	GTO Chopper Control Card	28
3-2.4.6	Terminal Block Card	29
3-2.4 .7	Auxiliary Power Card	31
3-2.4.8	Matching Card	31
3-2.4.9	A1 Supply Unit Control Card	32
3-2.4.10	Options	33
3-2.5	Control Panel 1	40
3-2.6	Control Panel 2	43
3-2.6.1	Keypad Functions	44
3-2.6.2	Parameter Selection	44
3-2.6.3	Changing Parameter Values	44
3-2.6.4	Starting & Stopping the Drive	45
3-2.6.5	Displaying & Changing Parameters	45
3-2.6.6	Number System Conversion	46
3-2.6.7	Control Panel Fault Displays	46
3-2.7	Standard Software Description of Operation	47
3-2.7.1	Start/Stop	47
3-2.7.2	Reversing	48
3-2.7.3	Remote Reference	48
3-2.7.4	Preset	49
3-2.7.5	Auto Mode	49
3-2.7.6	Fault 26	49
3-2.7.7	CP1 Lock	49

Section

3

BULLETIN 1352 FUNCTIONAL DESCRIPTION

3-1 Introduction

A Bulletin 1352 AC Drive uses Full Digital Control Logic and Advanced Control Algorithms for stepless control of an ordinary squirrel cage motor. A Bulletin 1352 AC Drive operates by rectifying the three-phase voltage source and converting the resulting DC power back to AC at a frequency that the user can control steplessly (Figure 3-1). The squirrel-cage motor operates at a speed determined by the supply frequency and connected load.

Smooth operation at low motor speeds is accomplished thru use of Star Modulated Pulse Width Modulation. Star modulation closely approximates the motor air gap flux produced by actual sine wave current. This results in reduced motor heating and accurate speed and torque control from 0 to 200 Hz. Rated torque at low frequencies is provided by automatic IR compensation. The 1352's 98% efficiency in addition to reducing heat dissipation also cuts energy use. Frequency resolution of ± .01Hz helps eliminate drift, and an input diode rectifier reduces power line disturbances.

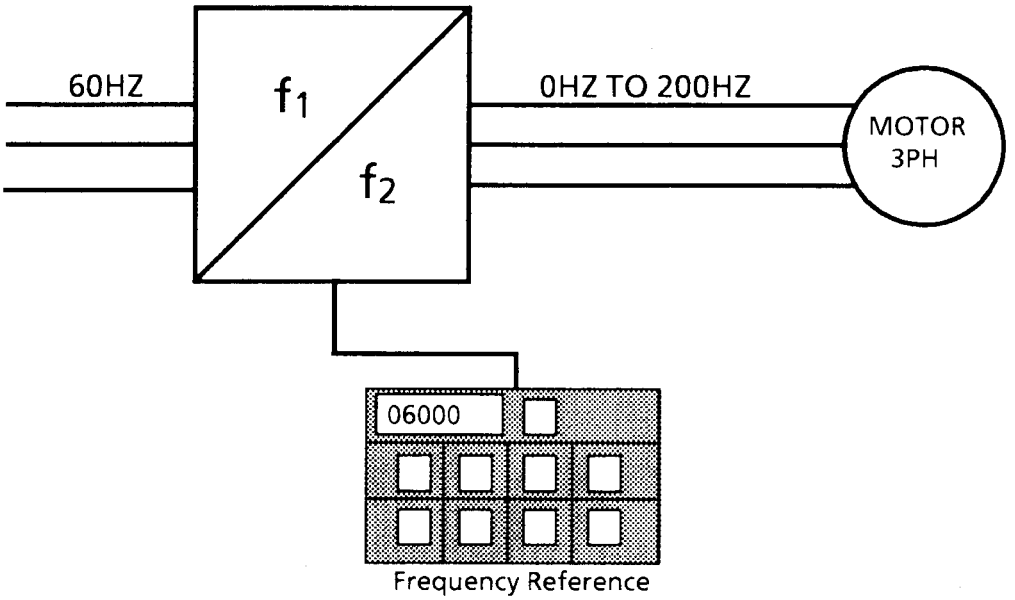

Figure 3-1. Motor Speed Control using a Bulletin 1352 AC Drive

3-2 The Bulletin 1352 AC Drive and its Operation

3-2.1

Fundamental 1352 Drive Features - The 1352 Drive uses the Pulse Width Modulation form of frequency conversion to control the output voltage pulse pattern.

To obtain A.C voltage of the desired frequency for speed control of an A.C. motor, the 1352 uses a frequency convertor unit to change D.C. voltage to an A.C. output (Figure 3-2). The pulsating D.C. voltage from the Line Convertor Unit is filtered on the D.C. bus through an LC low pass filter.

At the output side, the inverter unit forms an A.C. voltage of the desired frequency. The control unit provides the inputs that determine the output frequency supplied to the drive motor. The line rectifier unit provides the additional benefit of protecting the control circuitry from line surges, in addition to adding power factor and notching consistency.

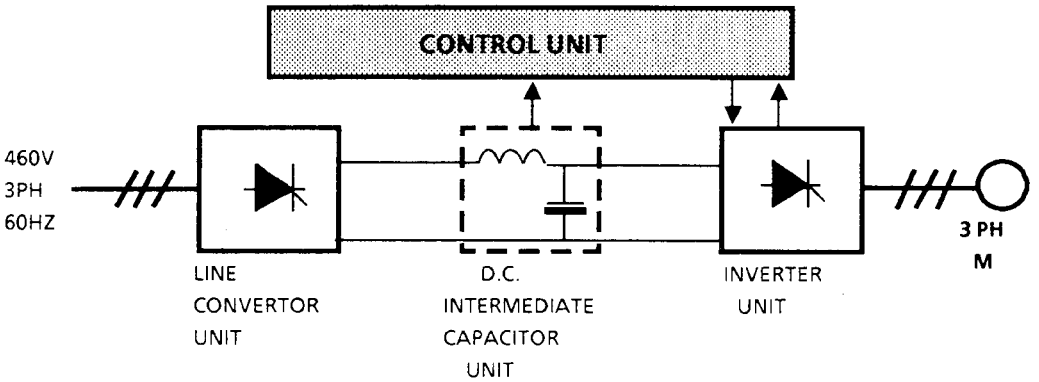

Figure 3-2. Frequency Converter Block Diagram.

The transistors used in the 1352 inverter unit under 115 KVA are triple diffused bipolar Darlingtons designated as GTR transistors. They are insulated modules which contain the power semiconductors of one phase (2 transistors and 2 free-wheeling diodes) as shown in Figure 3-3, or in higher current versions, the power semiconductors of one leg. (1 transistor and 1 free-wheeling diode.).

The output terminals of the inverter will withstand short circuits. This eliminates the need for an additional protection circuit.

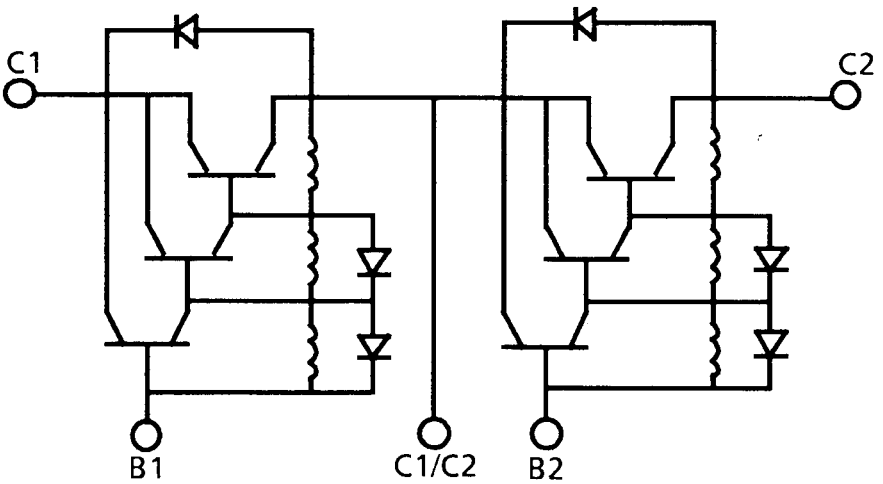

Figure 3-3. GTR Transistor Module Connection

Bulletin 1352 units larger than 115 KVA use presspack type GTO thyristors (Figure 3-4) in place of the GTR transistors. GTO (Gate Turn Off) thyristors provide the characteristics of both a thyristor and a power transistor. GTO thyristors can be turned off by applying a negative current pulse to the gate. The turn off pulse must be 25% of the anode current being turned off, and have a pulse duration of 10 to 20 uS. The rate of rise of the voltage during turnoff is limited by a snubber capacitor. While the GTO is turned on, a di/dt choke limits the current rise.

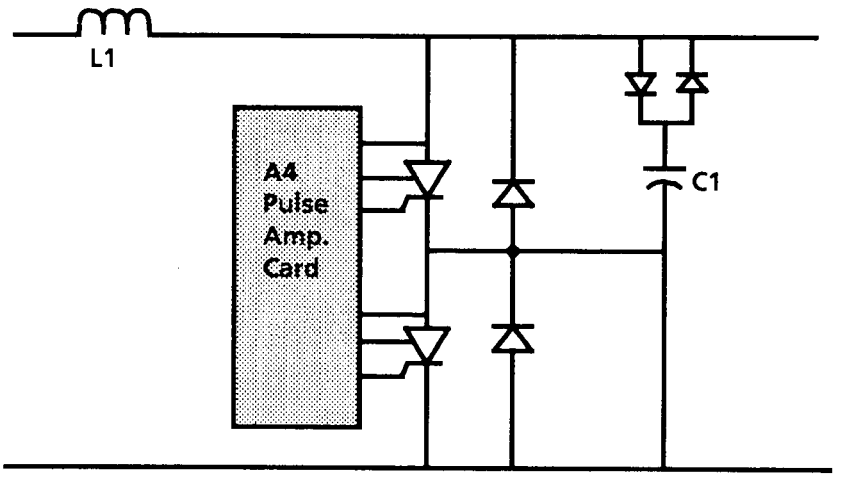

Figure 3-4. GTO Thyristor Connection

The program segment that controls the power semiconductors is known as Star Modulation.

Star Modulation allows fully digital control, while meeting the special requirements created by vector control of the modulator. These special requirements are:
- Zero Frequency
- Zero Voltage
- Voltage Control Regardless of Frequency
- Reversing at Zero Frequency
- Voltage Control over the Entire Frequency Range

Two modulation methods are used to meet these requirements :

- Asynchronous : The number of times the switch is turned on in a given time period remains constant. This makes zero frequency and smooth reversing possible. In addition, the distortion of current remains small.

- Synchronous : The number of main voltage pulses per half cycle remains constant. This permits smooth running at high frequencies. The pulse numbers are so selected that the distortion of current remains as small as possible.

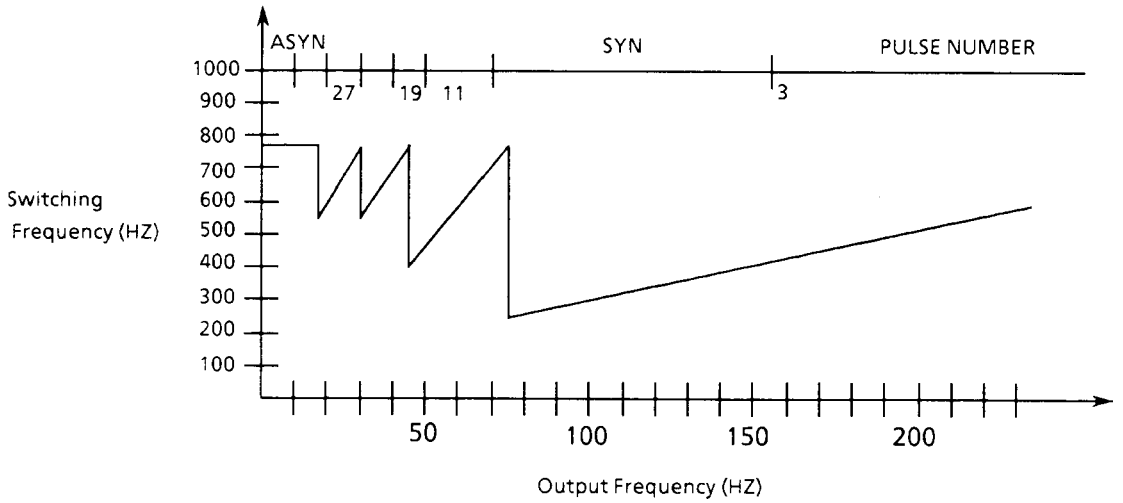

Figure 3-5. Approximate Switching Frequency as a Function of the Inverter Unit Output Frequency

Asynchronous modulation is used in the range of approximately 0 to 20 HZ and synchronous in the range from from approximately 20 to 200 HZ. Four different pulse numbers are used for synchronous modulation:

27 - 20 to 29 HZ

19 - 29 to 41 HZ

11 - 41 to 81 HZ

3 - 81 to 200 HZ

Transfer is possible from pulse numbers 11 and 3 to pulse number 1 at any frequency required by the voltage reference.

The fully digital control of the Bulletin 1352 yields the following benefits:

- Easy adjustment of drive set-up parameters.
- Sophisticated fault diagnostics to simplify troubleshooting.
- A reduced number of cards and components are necessary, which enhances reliability.
- Improved accuracy and repeatibility offer precise control.

The 1352 control circuits are composed of protection logic and an 80186 processor and its peripheral circuits.

Both internal and external protections are monitored on the control card. Overtemperature and DC Intermediate Circuit over and undervoltage protection circuits are provided. In all cases the activation of a drive protection circuit will stop the drive.

The main circuit is protected against overloads and short circuits by fast acting fuses. If a fuse blows in one phase only, the main contactor opens, since either the 220V supply or the 24V auxiliary voltage is lost. In units with fan cooling, the stoppage of a fan will activate the diode bridge heatsink thermostat and open the main contactor.

The use of a separate protection logic, helps assure speed and reliablility of protection functions.

The processor and its peripheral circuits are used to execute output-stage-specific programs and to perform the operations required by the programs. These programs are:

- Diagnostics
- Modulation
- Scalar Control
- Data Communications

The diagnostics programs monitor the condition of semi-conductors and current transducers, detect faults in the tachometer signals and serial data communications, and give reports on the protection logic operation. The modulation program controls the inverter switching functions. The Scalar control program performs the motor drive functions, while the Data Communications programs transfer data to the Terminal Block Card.

Communications between the external control and the 1352 are accomplished thru the control panel (CP1 or CP2). The major operations that can be performed are:

- Start/Stop
- Setting of Set-Point Values
- Reading of Actual Values
- Setting of Parameters for the Controllers
- Transfer of Diagnostic Messages

The standard Scalar control method (Figure 3-6) used in the Bulletin 1352 to set motor speed, relys on adjustment of the supply frequency. As load is applied to the motor, its's speed begins to decrease slightly. This action is referred to as motor slip. As slip increases, the motor current will also increase proportionally to produce torque to drive the machine. The slip settles to a value at which the driven machine will have the power it requires.

In applications where accurate torque control or good dynamic characteristics at low speed are not needed, the scalar control can be used alone, with no motor tach required. The processor then controls the drive thru frequency reference alone. If these low speed characteristics are required, the optional vector control should be used.

The A.C. Scalar Control shown in Figure 3-6 uses the function blocks to control various operations. Some examples include :

- Block 1 - Pulse Width Modulation
- Block 2 - Voltage Reference Control
- Block 3 - Slip Compensation
- Block 4 - Reference Value Selection
- Blocks 5A & 5B - Intermediate DC Voltage Control
- Blocks 6A & 6B - Torque Limit Control
- Block 7 - I.R. Compensation Control
- Block 8 - Scaling
- Block 9 - Actual Torque Value Calculation
- Block 10 - Stall Protection Monitor

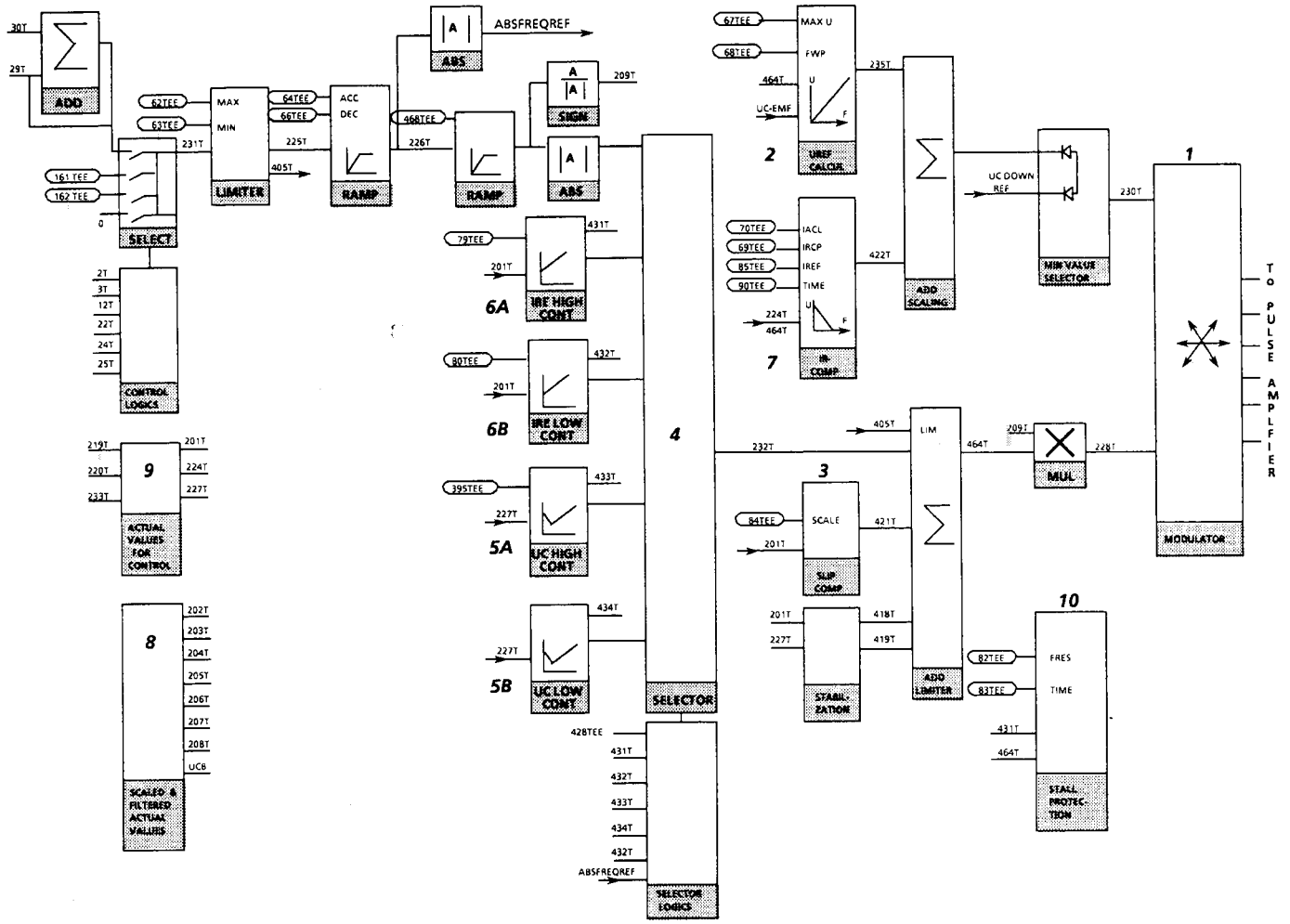

Figure 3-6. AC SCALAR CONTROL BLOCK DIAGRAM (Version 2.02)

Figure 3-6 Legend (Version 2.02)

PARM. NO.	TYPE	MIN.	MAX	FUNCTION
002	T			Start Request, Automatic Reset.
003	T			Stop Request, Ramp to Stop, Automatic Reset
012	T			Fault Reset, Automatic Reset
022	T			Coast Stop, Automatic Reset
024	T			Start 1 Request (to frequency 161TEE)
025	T			Start 2 Request (to frequency 162 TEE)
029	T			Signed Frequency Reference in .01Hz
062	TEE	-20000	20000	Maximum Frequency reference limit in .01Hz
063	TEE	-20000	20000	Minimum Frequency reference limit in .01HZ
064	TEE	0	3600	Frequency reference Accel time (0 to ± 100 Hz in Sec.)

Figure 3-6. Legend (cont.) (Version 2.02)

PARM. NO.	TYPE	MIN.	MAX	FUNCTION
066	TEE	0	32767	Frequency reference decel time from ± 100 Hz to 0
067	TEE	0	100	Max Output Voltage in Percent of rated
068	TEE	0	2000	Field Weakening Point in .01Hz.
069	TEE	0	3500	The point where IR compensation ends in .01Hz
070	TEE	0	300	IR Compensation Level in .1 percent of rated voltage at 0 frequency.
079	TEE	50	2000	Motoring Torque Limit in .1 % of max motor torque.
080	TEE	-1	-2000	Torque limit in generator range (.1% of max motor torque).
082	TEE	0	2000	Maximum operating frequency stall protection in .01Hz
083	TEE	0	60	Stall Protection operating time in .01Hz.
084	TEE	0	32000	Slip Compensation scaling.
085	TEE	0	2000	Total Current Limit in low frequency IR compensation (Figured in .1% of the inverter rated current)
090	TEE	0	180	Maximum time (in seconds) that IR Comp is active after the start.
161	TEE	-20000	20000	Frequency (in .01 Hz) that command 24T sends inverter to on start-up.
162	TEE	-20000	20000	Frequency (in .01Hz) that command 25T sends inverter to on start-up.
201	T	0	0	Inverter Rated Current (Active comp. of motor current in .072% units)
202	T	0	0	Filtered actual value of motor active current 201T.
203	T	0	0	Actual Filtered Motor Power.
204	T	0	0	Filtered actual value of output voltage (in .1% of rated voltage).
205	T	0	0	Filtered inverter output current (in .1% of rated current).
206	T	0	0	COS PHI. In .1 percent
207	T	0	0	DC voltage actual value in .1 percent of rated voltage.
208	T	0	0	Filtered actual value of frequency in .01Hz.
209	T	0	0	Zero = Positive direction Nonzero = Negative direction
219	T	0	0	R-phase output current instant value in .01 percent of rated current.
220	T	0	0	S-phase output current instant value in .01 percent of rated current.
224	T	0	0	Inverter total unfiltered current output in .1% of the rated current.
225	T	0	0	Frequency reference before ramp and after limiter in .01Hz.
226	T	0	0	Frequency reference after ramp in .01Hz.
227	T	0	0	UCACT
228	T	0	0	FACT
230	T			Voltage Reference to modulator.
231	T	0	0	Unlimited frequency reference before ramp in .01Hz.
232	T	0	0	The internal frequency reference in .01Hz.
233	T	0	0	Scaled angle of voltage vector to the R-phase so that 0 = zero degrees and 1535 = 360 degrees.
235	T	0	0	Voltage reference before IR compensation. Scaled so 32,000 is rated voltage when DC voltage has its rated value.
238	T			
405	T	0	0	Internal frequency limit In a positive direction 62TEE plus 2Hz. In a negative direction 63TEE minus 2Hz.
418	T	0	0	Output of active current stabilizer in .01Hz.
419	T	0	0	Output of UC-stabilizer in .01Hz.
421	T	0	0	Output of slip compensator in .01Hz.
422	T	0	0	Additional voltage reference from boost functionat 0 frequency.
431	T	0	0	IREHIGHCONT
432	T	0	0	IRECONTLOW
433	T	0	0	UCHIGHCONT
434	T	0	0	UCCONTLOW
464	T	0	0	ABS FREQ. Internal unsigned frequency reference in .01Hz.
468	TEE	0	0	Maximum freq. reference step in 3ms allowed by 2nd ramp block.

3-3.2 **Construction of the Drive** - The standard 1352 Drive is assembled in a modular steel cabinet which provides NEMA Type 1 protection against environmental conditions. The Drive components are assembled in separate modules which allow for ease of assembly and service. In the larger horsepower ranges (150HP and up) the modules are wheel mounted and can be rolled in and out of the cabinet. The Bulletin 1352 is available in an optional gasketed NEMA 12 type enclosure through 290KVA @ 460 volts. This enclosure system includes an integral side-mounted freon based air conditioning system is designed to tolerate up to 50°C ambient temperatures. A gasketed and filtered cabinet option is also available for use where air-borne dust is an environmental consideration and ambient temperatures are 0 - 40°C. (See Section 10 for additional Air-Conditioning service information.)

The 1352 Drive is made up of two main modules, the Line Supply Unit (LSU) and the Inverter Unit (INU) (Figure 3-7). The following smaller modules make up the components of the two large modules:
- Line Contactor Unit CTU
- Line Convertor Unit LCU
- Inverter Unit INU
- Capacitor Bank Unit CBU
- Control Panel CP1 (cabinet mounted) or CP-2.

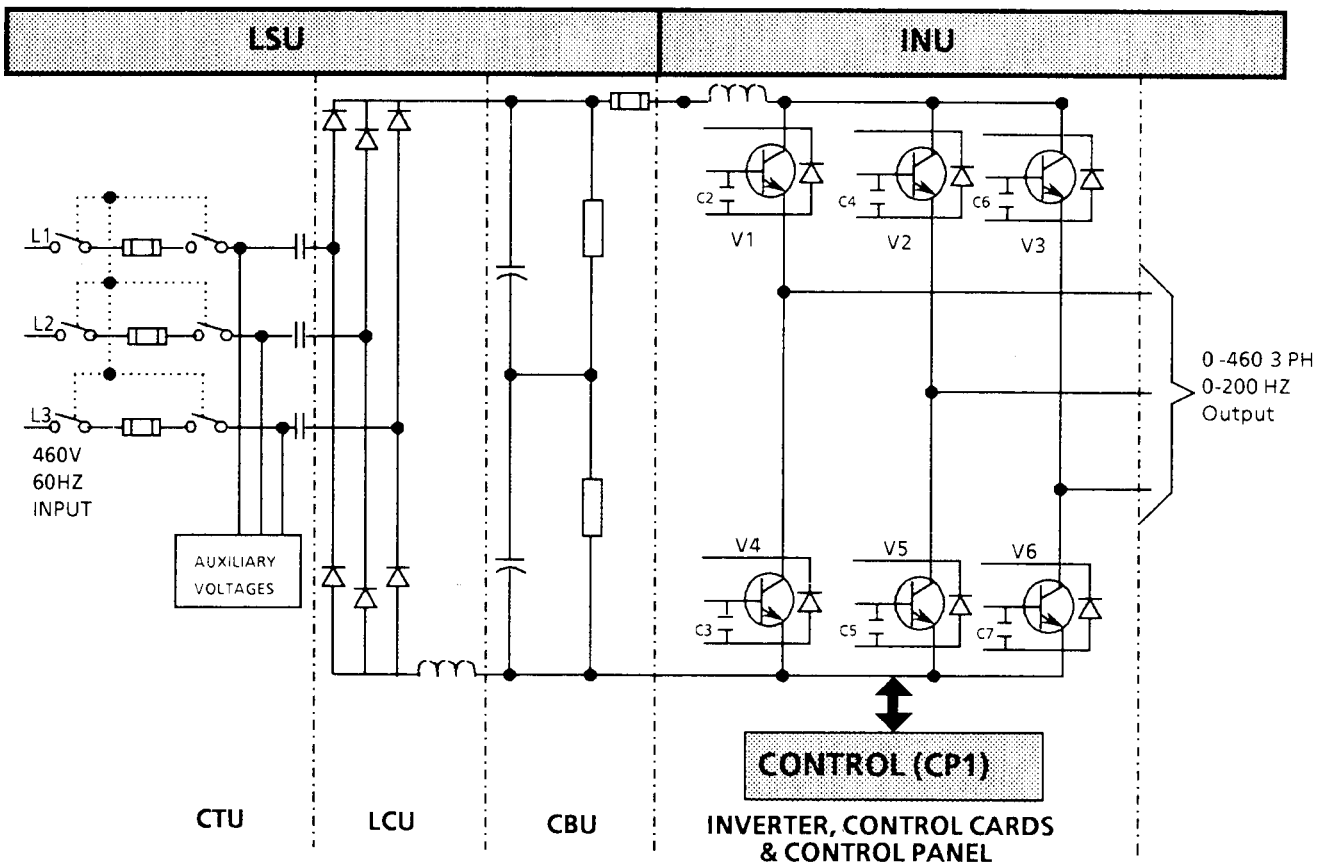

Figure 3-7. Bulletin 1352 Modules in a Single Motor Drive

The typical physical layout of the drive components in the cabinet is shown in Figure 3 - 8.

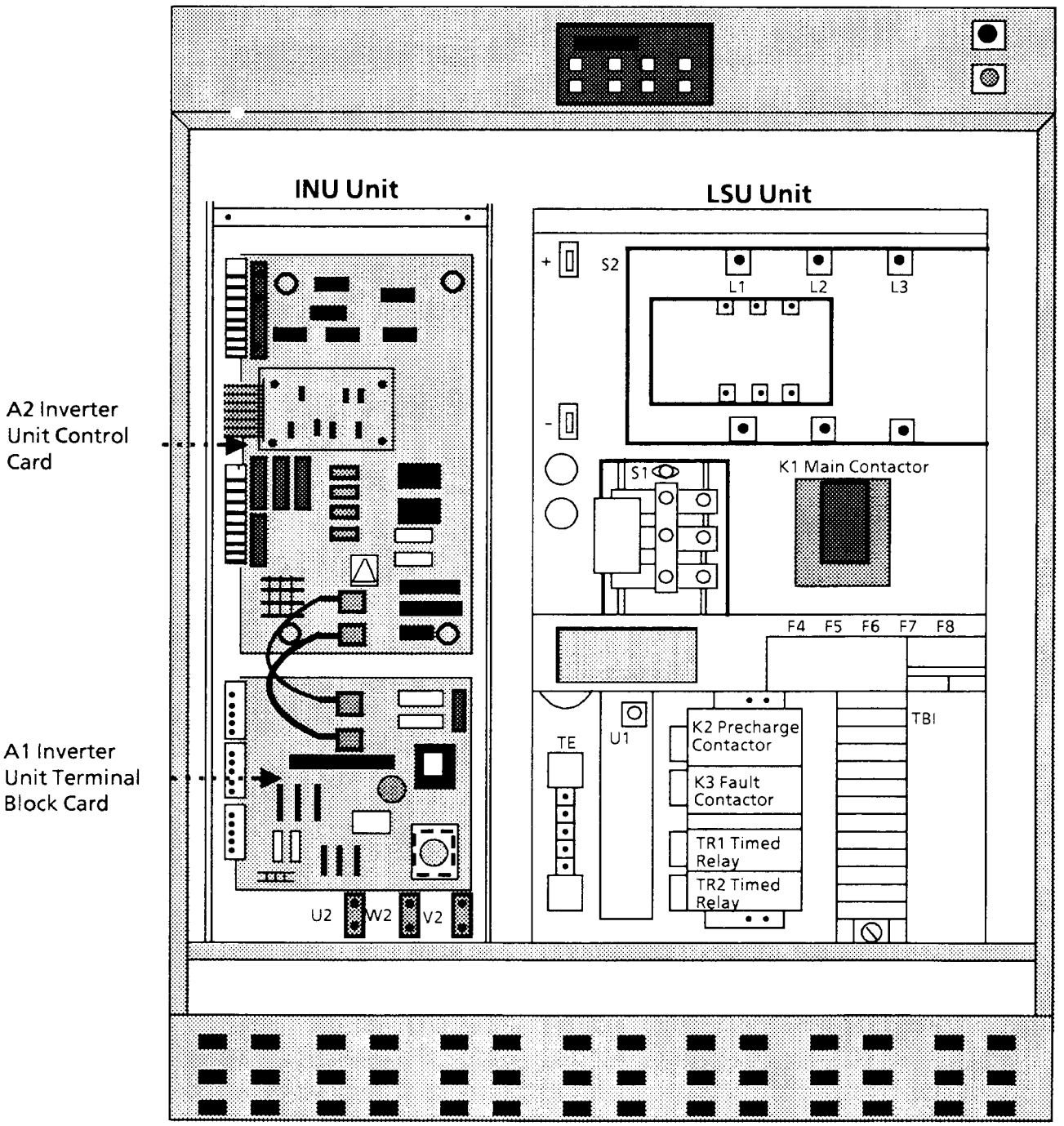

Figure 3-8. Typical Component Layout in a 30 - 115 KVA 1352 Series B Drive

For efficient use of space in the cabinet, the modules are narrow and tall, which allows all modules to fit in a compact cabinet. Larger modules are equipped with rollers, to ease their removal from the cabinet.

The connections to the two major modules are detailed in Tables 3-1 and 3-2.

Table 3-1. Bulletin 1352 Line Supply Unit (LSU) Connections

SERIES A

CONNECTOR	FUNCTION	REMARKS
L1	3 PHASE	460 VAC
L2	INPUT	3 PHASE
L3	TERMINALS	60 HZ
X1		
X1-1	+ 24V	
X1-2	Ground	
X1-3	Emergency Stop	Load Capacity
X1-4	Indication Contact	2A, 250V
X1-5		
X1-6		
X1-7	Fault Indication	Output Signal: 24VDC,200mA
X1-8		
X1-9	Emergency Stop	OV = Emergency Stop
X1-10		
X2		
X2-3	CBU Overtemp	
X2-6	CAP Overvolt	
X2-7	External	
X2-8	Interlock	+ 24V DC
X3		24V = ON
X3-1		
X3-2	ON/OFF	
X3-3	Control	
X3-4	Charge Sign	Load Capacity
X3-5	ON	2A, 250V
X3-6	Aux Contact	Load Capacity
X3-7	of Main Contactor	2A, 250V
X3-8		
X3-9	Contactor	
X3-10	Signal ON	
TE	Ground	For Cable Shields etc.

Table 3-2. Bulletin 1352 Line Supply Unit (LSU) Connections

SERIES B

CONNECTOR	FUNCTION	REMARKS
L1, L2, L3	3 PHASE INPUT TERMINALS	460 VAC 3 PHASE 60 HZ
TB1		
22, 24, K4	Jumper	Jumper not present for Dynamic Braking option.
25	Jumper	Jumper not present for Ground Fault option.
21, 21, 21, 19, 19	115VAC, 2.0A Input	For AC Connection Card Option
21, 26	Emergency Stop	
30, 30, K3, 31	External Interlock	Door Handle
32, 33	OFF / READY / ON	
36, K3, 37	Fault Contact	Option for Fault Contact
38, K1, 39	Main Contact Aux.	Option for Main Contact
TE	Ground	For Cable Shields etc.
20, 19	215 VAC Out	

Table 3-3 Bulletin 1352 Inverter Unit (INU) Connections of the Terminal Block Card

CONNECTOR	FUNCTION	REMARKS
X1		
X1-1	Digital Input 0	**Eight Digital Input Channels**
X1-2	Digital Input 1	
X1-3	Digital Input 2	Sinking Current 3mA/Channel
X1-4	Digital Input 3	
X1-5	Digital Input 4	
X1-6	Digital Input 5	
X1-7	Digital Input 6	
X1-8	Digital In put7	0V
X1-9	Common	0V
X1-10	Common	
X2		
X2-1	Digital Output	+ 24V
X2-2	Digital Output Signal Voltage	+ 24V
X2-3	Digital Output 0	**Four Digital Output Channels**
X2-4	Digital Output 1	Load Capacity 200mA/Channel
X2-5	Digital Output 2	
X2-6	Digital Output 3	
X2-7	Reserved	
X2-8	Reserved	
X2-9	Reserved	
X2-10	Reserved	
X3		
X3-1	Reference Voltage	Stabilized 5V 10 mA
X3-2	Remote Potentiometer	Suitable Pot 2K Ohm, 3W1
X3-3	or Analog Signal	Input Signals : 0...5V, 0...20mA
X3-4		4...20mA
X3-5	Analog Voltage Output 1	Impedance 100K Ohm/ 250 Ohm
X3-6	Analog Voltage Output 2	Output Signal: 0...5V, 10mA
X3-7	Analog mA Output 1	0...1mA, Max 4K Ohm
X3-8	Analog Output 1Common	
X3-9	Analog mA Output 2	Output Signal: 0..5V 10mA
X3-10	Analog Output 2 Common	0..1mA, Max 4K Ohm
X5	Connection Terminal For Control Panel	Aux Voltage + 24V ± 5V
U2	3 Phase Output Terminals	0 - 200 Hz
V2		0 - 460 VAC
W2		

3-2.3 Drive Component Descriptions

3-2.3.1 General - A block diagram of the major components of the Bulletin 1352 is detailed in Figure 3-9.

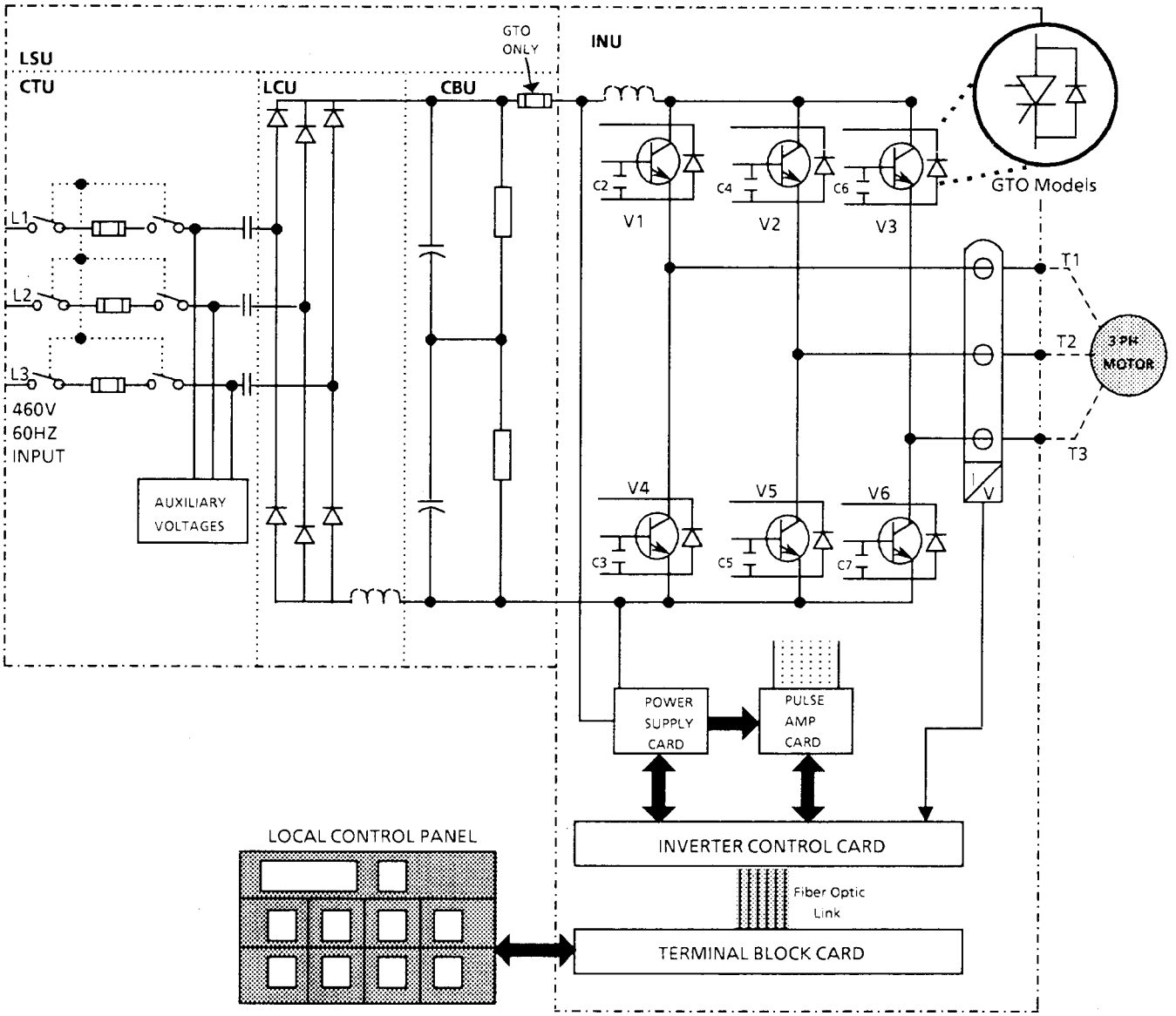

Figure 3-9. Bulletin 1352 Block Diagram

The Line Supply Unit (LSU) consists of a Diode Bridge, connection devices, a D.C. Choke and a Capacitor Bank. The LSU breaks down into three separate units, (Figure 3-9):

- Contactor Unit CTU
- Line Convertor Unit LCU
- Capacitor Bank Unit CBU

The Inverter Unit (INU) contains the power semiconductors that generate the PWM output waveform and the Drive Control Logic.

3-2.3.2 **Disconnect** - The externally operated Disconnect switch (Figure 3-10) allows the drive to be disconnected from the AC power supply before gaining access to the cabinet internals. The handle is interlocked to guard against entry to the enclosure while the switch is engaged. If desired, the disconnect can also be padlocked to guard against unauthorized entry.

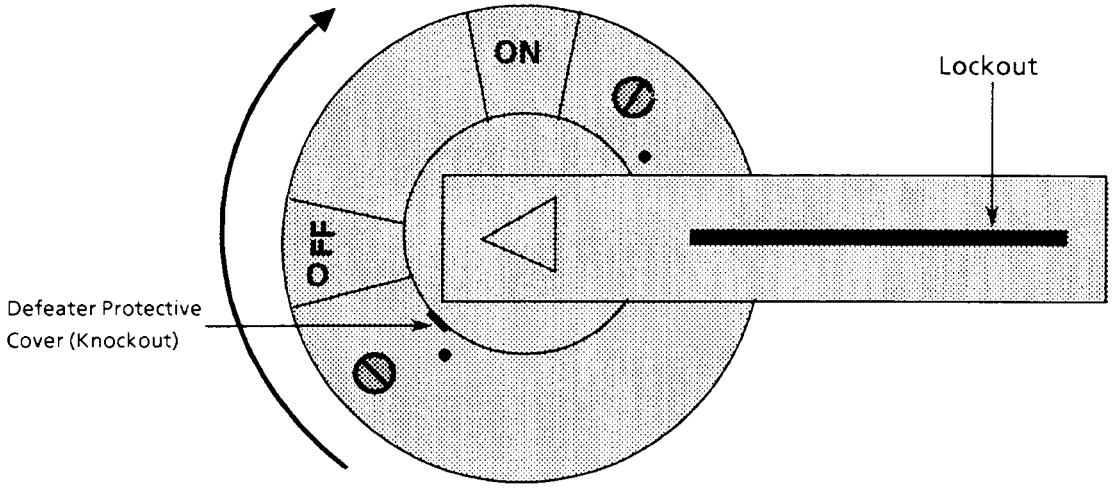

Figure 3-10. A Typical Bulletin 1352 Disconnect Switch Operator

If maintenance must be performed with power on, a defeater mechanism is provided to allow entry to the cabinet without turning off the power.

WARNING: If the defeater mechanism is used, and power is supplied to the drive, a potentially fatal voltage is present between the cards and the inverter chassis! Only qualified service or maintenace personnel familiar with the 1352 Drive should attempt to use the defeater mechanism during service or set-up.

To engage the defeater mechanism, use a small screwdriver to remove the defeater protective cover. Pry up with the screwdriver to pull the locking rod to the unlocked position (Figure 3-11).

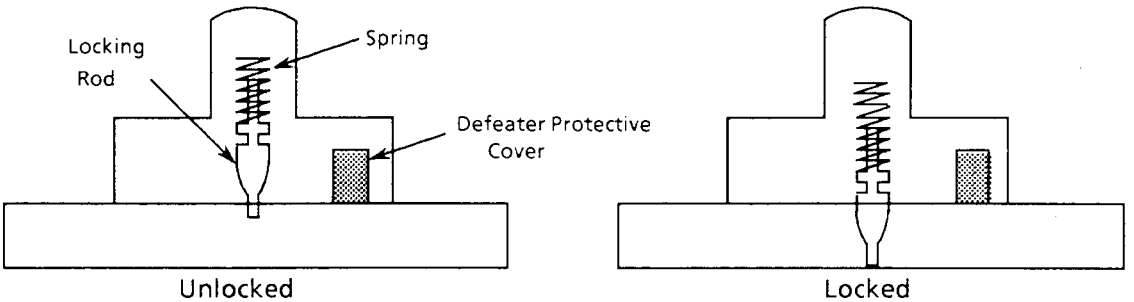

Figure 3-11. Side View Cutaway of Disconnect Switch Operator

3-2.3.3 **Control Panel** - A standard control panel (CP-1) composed of 9 membrane covered pushbuttons and a 6 digit display (Figure 3-12) provides the following functions:

- Local Drive Operator Control
- Display of Frequency and Load
- Drive Monitoring and Diagnostic Indication
- Setup Parameter Adjustment

An optional remote control panel (CP-2) is also available.

NOTE! Detailed Control Panel operation is covered in section 3-2.5

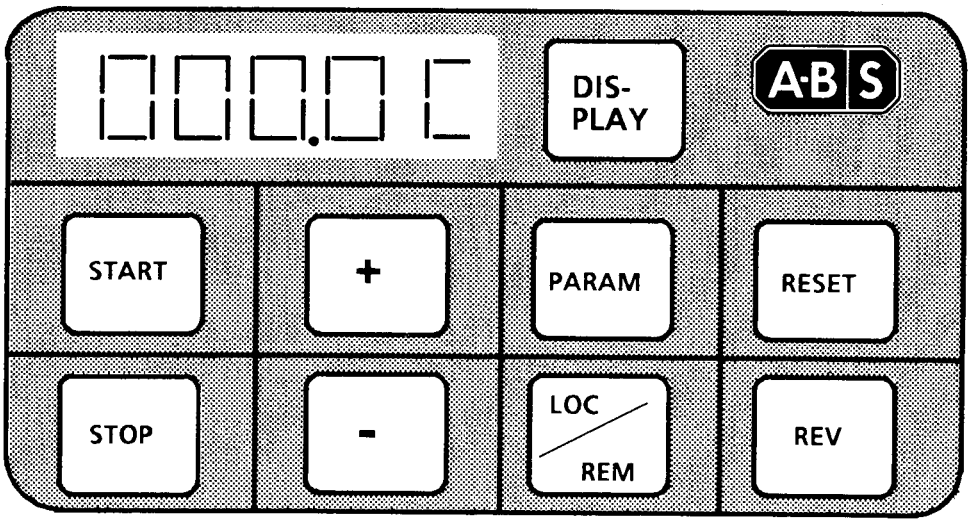

Figure 3-12. Bulletin 1352 CP-1 Control Panel.

3-2.3.4 **Contactor Unit CTU** - The frequency converter is connected to the distribution line via a disconnect and contactor (Figure 3-13). In an emergency, or if the line converter fails, the main contactor is used to

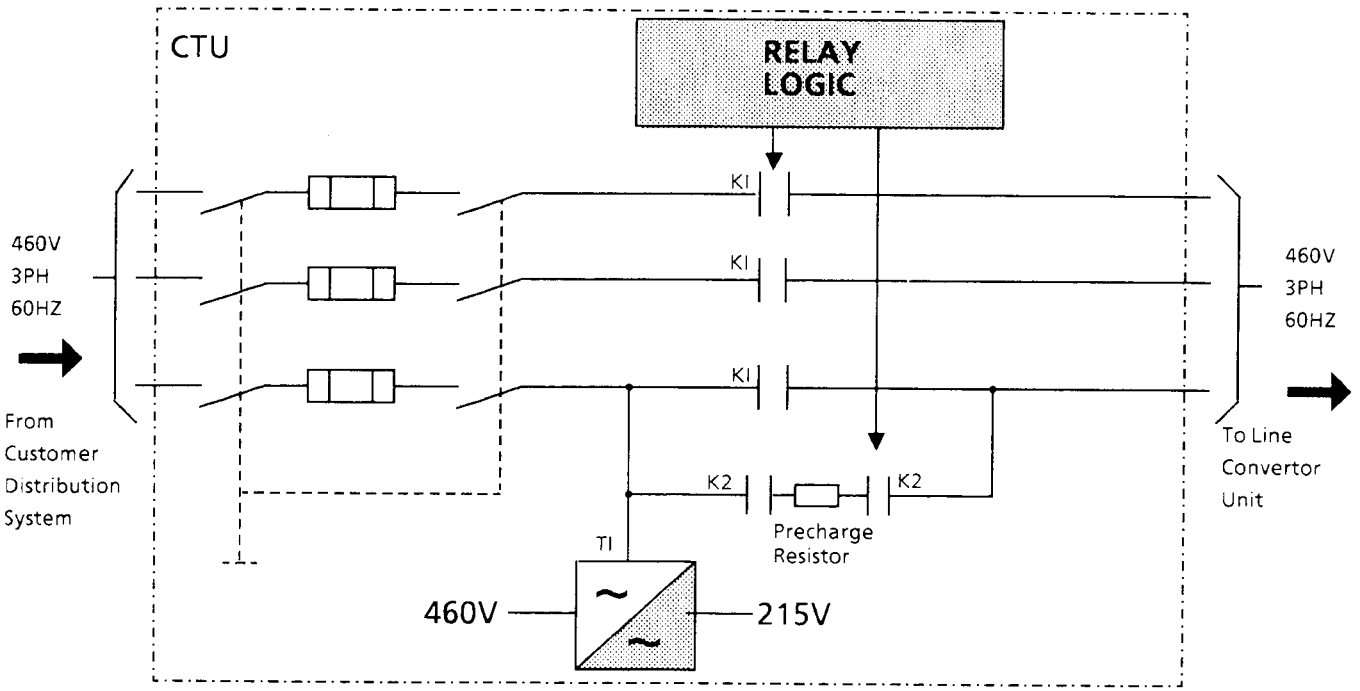

Figure 3-13. Contactor Unit (CTU) Block Diagram

disconnect the frequency converter. On larger inverter units, a D.C. link fuse is also incorporated .

An uneven voltage division in the capacitors of the capacitor bank unit, or an overtemperature in the line converter unit, are two possible factors that could lead to line converter unit failures.

The contactor unit main fuses function as protection against short-circuit of the frequency converter.

The CBU is charged thru the charging resistors before the main contactor closes. At the end of a 0.5 second charging period, the auxiliary contactor (K2) opens the charging circuit and the main contactor (K1) closes.

The 215V supply to the fans of the other modules and the INU transformer is provided by the LSU voltage transformer T1.

CTU devices form a separate unit with incoming power being routed to the unit thru the top of the cabinet. The CTU is then connected to the adjacent Line Converter Unit (LCU).

3-2.3.5 **Line Converter Unit LCU** - Bulletin 1352 units use a 6 pulse diode bridge. The diode bridge produces the D.C. power source for the frequency convertor. The DC power supplied to the capacitor bank unit travels thru a smoothing choke L1. The RC snubber unit connected across the diode bridge helps prevent temporary overvoltages (Figure 3-14). The unit is protected against overheating due to fan failure by a thermostatic switch (S1). All Bulletin 1352 Line Converter Units include a bi-polar snubber circuit. The basic purpose of the bi-polar snubber circuit is to suppress voltage transients from the line and to reduce losses in the resistors during normal operation. Diode bridges are manufactured in modules with ratings to 115 KVA.

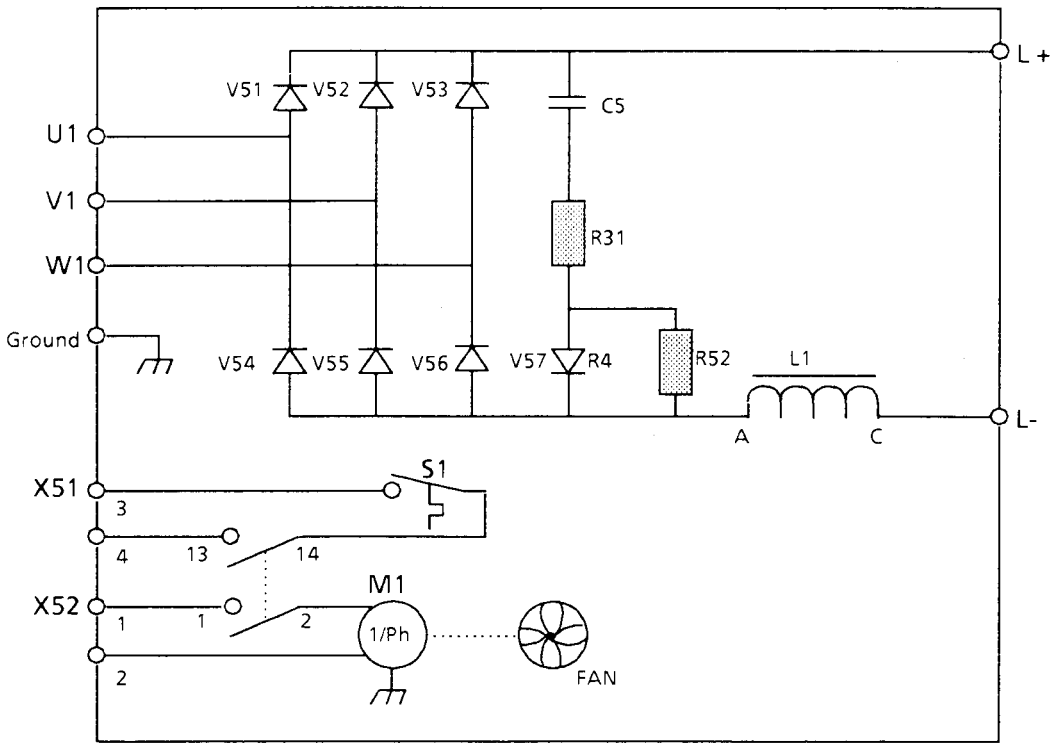

Figure 3-14. 6 Pulse Line Converter Unit

3-3.3.6 **Capacitor Bank Unit CBU** - The CBU is comprized of electrolytic capacitors which are connected in series and parallel to form a module (Figure 3-15). The capacitor bank unit minimizes ripple current in the power supplied by the diode bridge to the D.C. intermediate circuit. and in the power supplied by the D.C. Intermediate circuit to the inverter unit INU. The capacitors are monitored for overvoltage, and overtemperature. The balancing resistors R5, R6 and R7 assure that the DC voltages are distributed evenly between the capacitors.

When the CBU is disconnected from the voltage supply, the capacitors discharge thru R5,R6 and R7 which then act as discharge resistors.

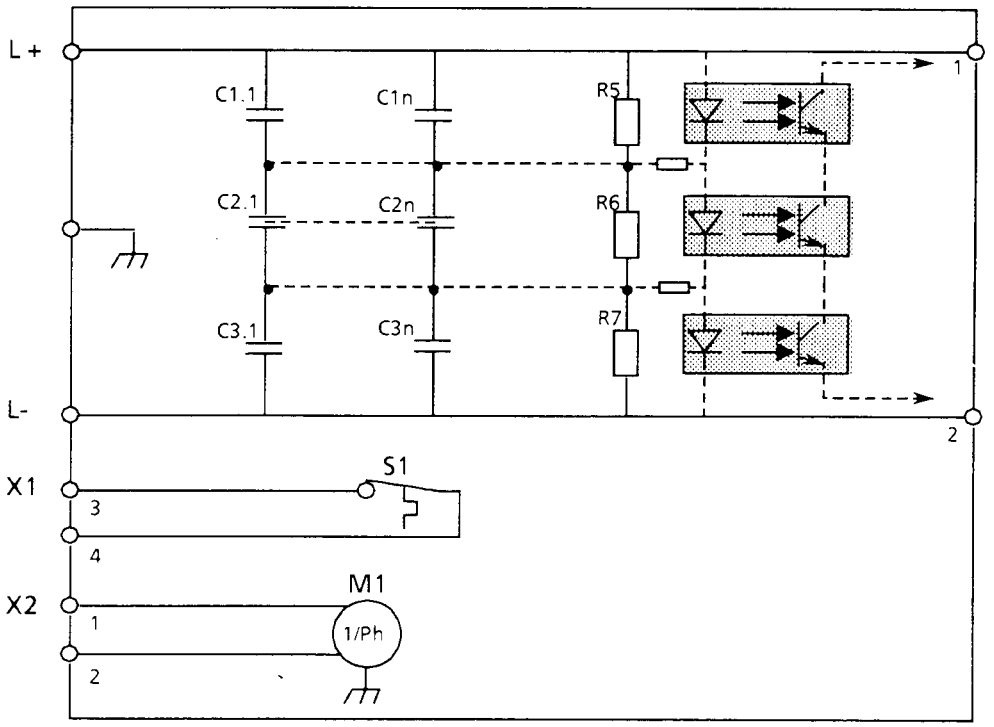

Figure 3-15. Typical Capacitor Bank Unit Circuit Diagram

3-3.3.7 **Inverter Unit INU** - The Inverter Unit converts the D.C. intermediate circuit voltage to three phase power that can be controlled for amplitude and frequency when supplied to the AC motor. (Figure 3-16). Units of 115KVA or less use GTR transistors as power semi-conductors, while units larger than 115KVA use GTO thyristors.

The inverter unit is controlled by the Power Supply Card, The Pulse Amplifier Card, the Control Card and the Terminal Block Card. The signals between the Terminal Block Card and Connection Card are galvanically isolated using fiber optic links.

Except for the Terminal Block Card, the circuit boards in the Inverter Unit receive their auxiliary voltage from the D.C. Bus circuit and are at Bus potential (approximately 330V) in relation to chassis ground!

Hall Effect transducers in the INU measure the motor current on two phases (three on GTO models) with the result being monitored by the control card.

The control signals for the power transistors are transmitted from the Control Card to the amplifier card via optocouplers.

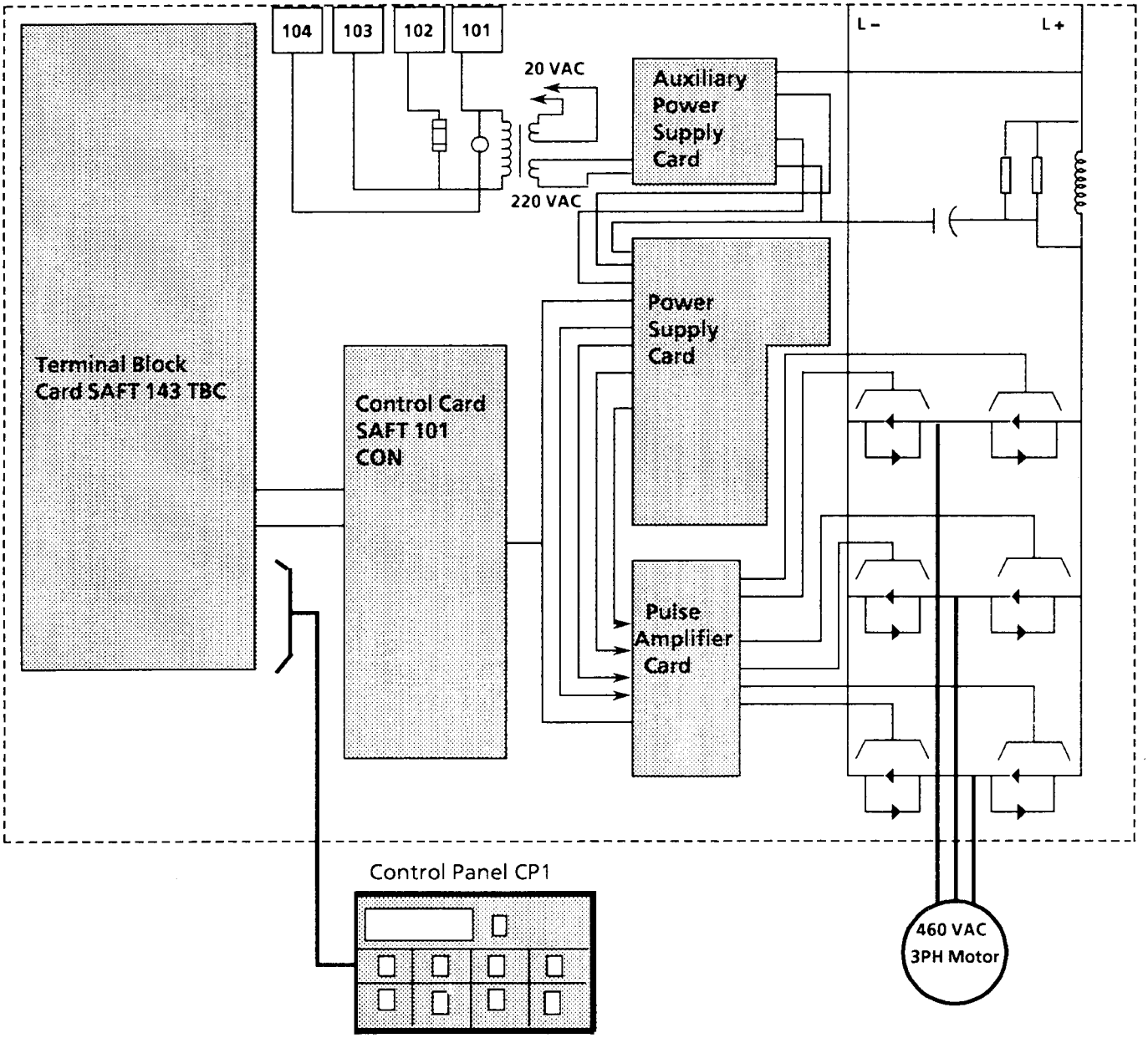

Figure 3-16. Inverter Unit Circuit Diagram

3-2.3.8 **GTR Inverter** - The power conductors of the GTR inverter unit are placed in insulated modules which contain a transistor and a free wheeling diode (Figure 3-17). The power semiconductors are protected against line disturbances and voltage spikes that could create damaging overvoltage or overcurrent conditions. The di/dt protection is provided by choke L1, and dv/dt protection by individual snubbers. After commutation, the excess energy stored in the choke is transferred thru diodes V14 thru V16 to V7 and the clamping capacitor C1. The capacitor is then discharged to the capacitor bank via resistor R1. The control card, the power supply card and the pulse amplifier card are all at the minus potential of the main-circuit voltage.

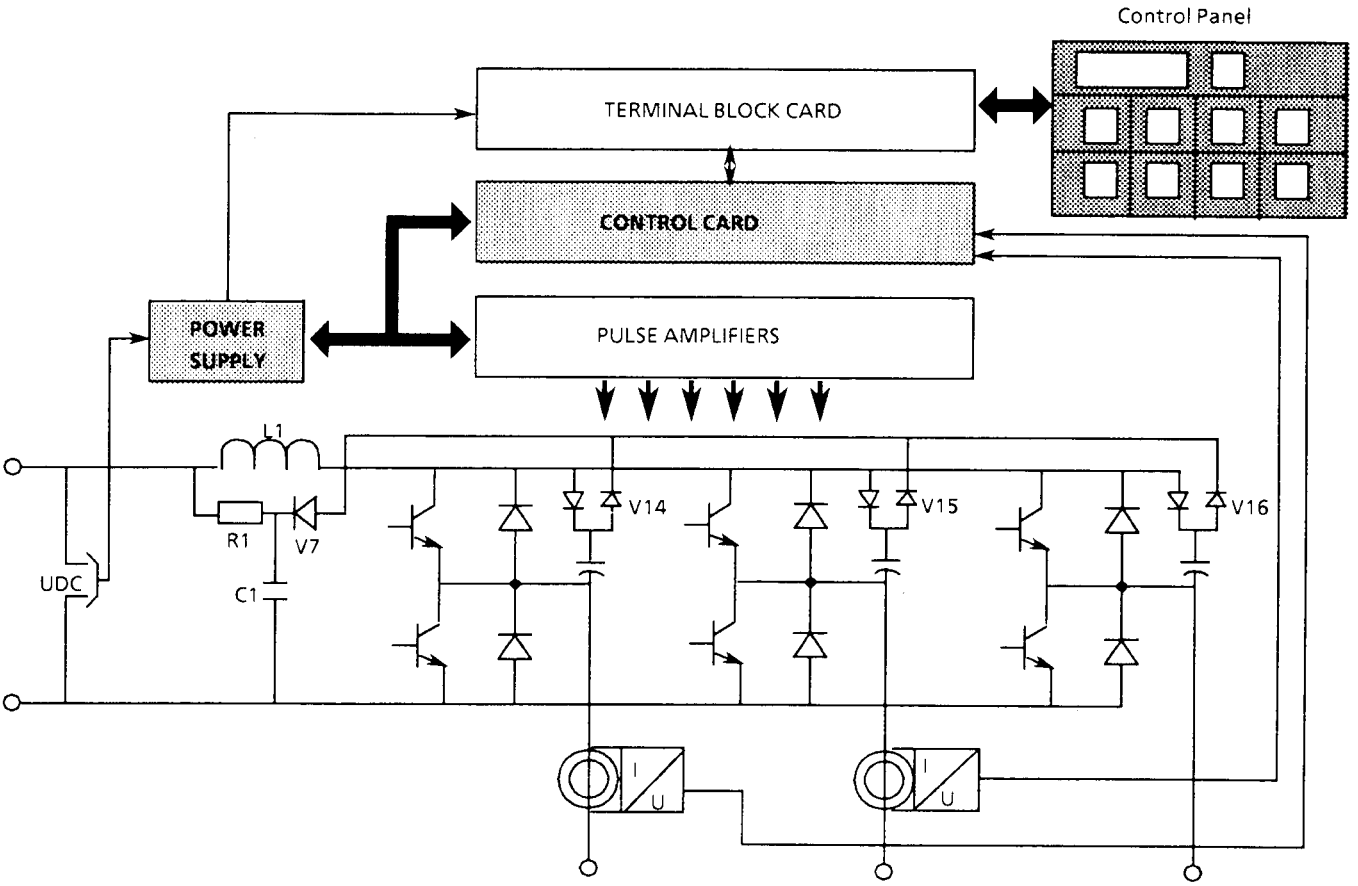

Figure 3-17. GTR Inverter Block Diagram

The control signals of the power transistors are transmitted via optocouplers.

The inverter unit is protected against overtemperature, overcurrent, short circuit and over and undervoltage. Motor current is measured on two phases by Hall-Effect current transducers. The self diagnostic portion of the control cards checks the condition of power semiconductors, measuring transducers, pulse amplifiers and control logic after the supply voltage has been switched on. In the event of an overtemperature, overcurrent, short circuit or abnormal voltage reading, the power transistors are switched off.

3-2.3.9 **GTO Inverter** - The connection of a GTO inverter is similar to a GTR inverter (Figure 3-18). The GTO inverter uses presspack type Gate Turn Off thyristor's instead of transistors.

A DC chopper (CH) is added to feed energy from the di/dt (Choke L1) and dv/dt(capacitors C1-C3) protection circuits back to the D.C. intermediate circuit.

Feeding the energy stored in the protection circuits to capacitor C9, and then back to the D.C. intermediate circuit via the DC chopper (CH), results in extremely low switching losses. The D.C. chopper is controlled by a separate pulse amplifier and control card.

On GTO equipped drives, the motor current is measured at each phase by hall/effect current transducers.

The self diagnostic feature of the 1352 checks the condition of each GTO unit on power up, in addition to checking the transducers, DC chopper, pulse amplifiers and control logic. If a fault is detected, starting is inhibited and a fault message appears on the control panel.

When a minor fault condition occurs, the GTO's are turned off to stop the drive. In the case of a worst fault condition such as a short circuit in the output terminals, a ground fault, or a shoot-thru in the power unit, all GTO's are gated off.

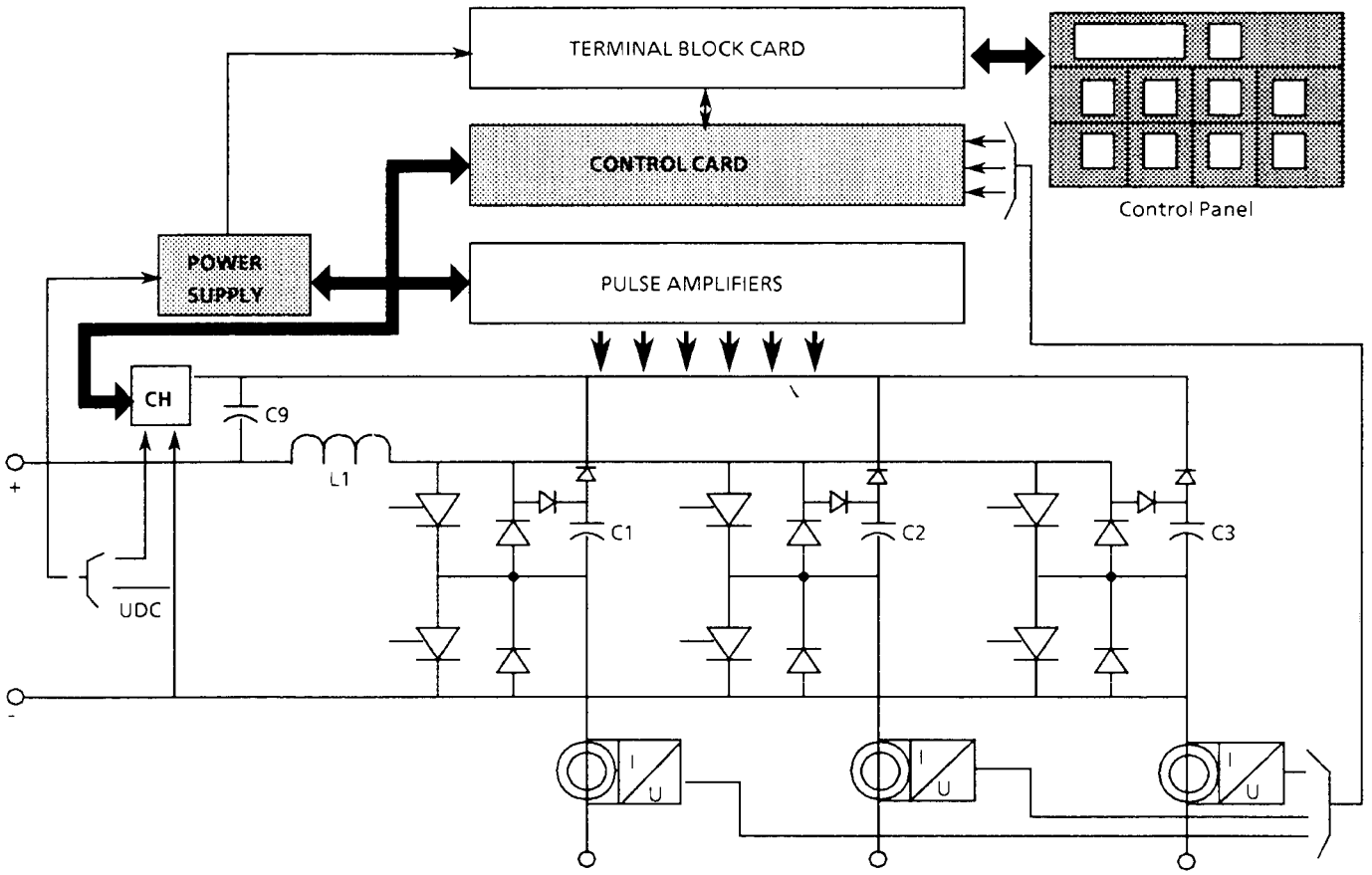

Figure 3-18. GTO Inverter Block Diagram.

3-2.4 **Circuit Card Descriptions** - The circuit cards described in this section are identified by both their part numbers (SAFT 101 CON, SAFT 145 APC etc.) and their locations (INU-A3, LSU-A1 etc.). Cards such as the Signal Matching Card and the Pulse Amplifier Card have a distinct part number for each KVA rating.

3-2.4.1 **Control Card (SAFT 101 CON/3500 - C01)** - The 1352 control card (Figure 3-19) is microprocessor controlled and fully digital in operation. In addition to monitoring the drive, the control card monitors its own operation. Typical failure reports are:

- Overcurrent or Undervoltage
- Overvoltage in the intermediate D.C circuit.
- Pulse Amplifier Failure
- Overtemperature in the power unit.

When a fault occurs, a numeric fault code is displayed on the control panel..

The main function of the control card is to ensure that the power semi-conductors of the inverter unit supply the correct voltage at the proper frequency to the A.C. motor. Various process application programs are also programmed into the control card memory. A drive specific, signal matching card (e.g.SAFT 50 F460) is also contained on the control card.

Two AM9513 counter circuits are contained on the Control Card. The microprocessor on the card is an Intel 80186 which contains:

- A 16 Bit Processor
- A Clock Generator
- 2 Independent high-speed DMA channels
- A Programmable Interrupt Controller
- 3 Programmable Timers
- Programmable Logic for selection of Memory and Peripheral Equipment.
- A Programmable Wait - Cycle Generator
- A Bus Controller.

The microprocessor (D8-Figure 3-20) carries out all functions on the control card with the exception of fault tripping, which is hardware based.

The EPROM's (D17 and D18) are part of the permanent read only memory and they contain approximately 30 K byte of programs. The EEPROM (D16) contents will be retained in event of a power failure. When voltage falls below 4.5V, the memory circuits can no longer be written to. The drive specific constants are stored in this portion of the memory to ensure they are not lost due to a temporary power failure or accidental disconnection.

The RAM's (D19 & D20) are part of the read-write memory and contain the program variables. This portion of the memory is not protected against loss during power failures.

The A/D converter (D24) converts the analog voltage into digital form.

The serial data communications circuits (D4 & D5) establish communication between the control card and all external devices.

The start counter (D28) times modulation, checks the clock pulses for the serial data communication circuits and checks the commutation delay and minimum pulse for the semicustom circuit.

The general calculator (D45) measures speed, angle and current.

The semicustom circuit (D40) is a latch that helps prevent simultaneous conduction of GTOs or transistors that are located on the same leg. The semicustom circuit also starts the inverter. If a fault occurs in the inverter after start-up, the semicustom circuit will shut down and control pulses will disappear from the power unit.

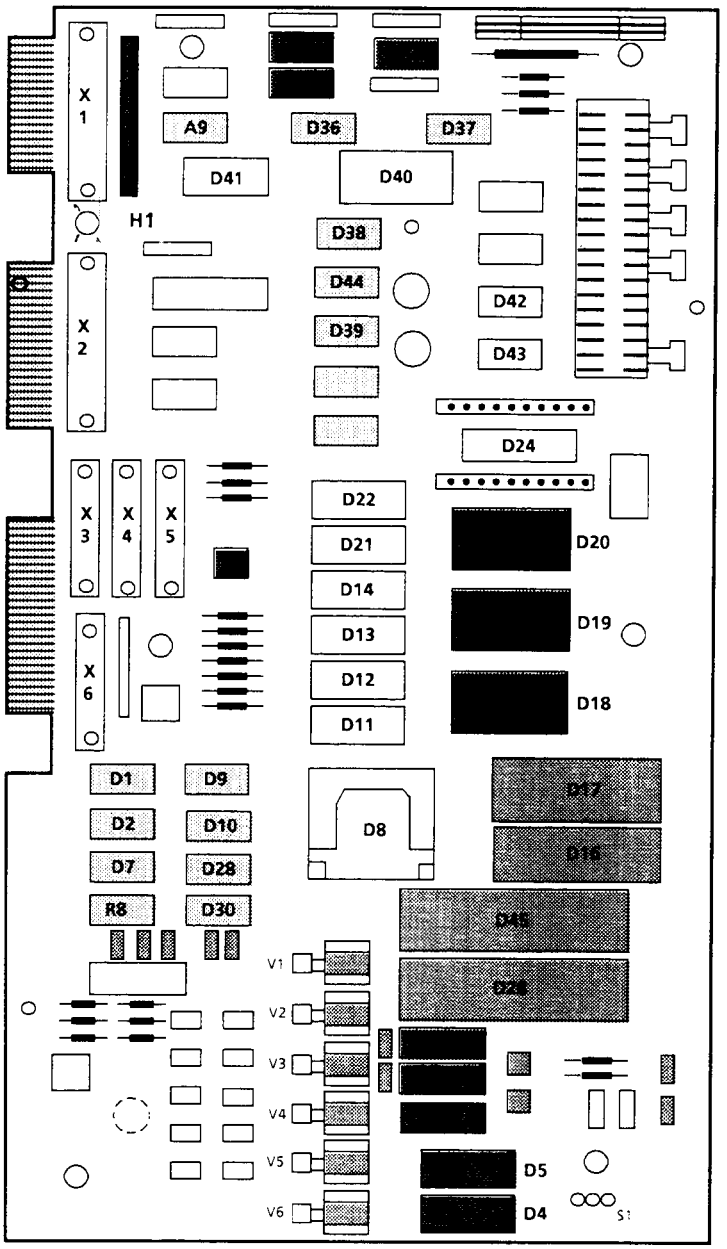

Figure 3-19. Bulletin 1352 Control Card (INU-A2 , SAFT 101 CON)

Figure 3-19 Legend

Terminal	Type
X1	40 Pole ribbon cable connector, 20 for pulse amplifiers, 20 for voltage source
X2	40 pole ribbon cable connector for Inverter-Specific Card
X3-X5	10 Pole ribbon cable connectors for current transformers
X6	20 Pole ribbon cable connector, provides data channel out for data converter
V1	Fiber Optic Connector (Receiver Tach Pulses)
V2	Fiber Optic Connector (Receiver Tach Pulses)
V3	Fiber Optic Connector (Terminal Block Card Receiver)
V4	Fiber Optic Connector (Terminal Block Card Transmitter)
V5	Fiber Optic Connector (Receiver)
V6	Fiber Optic Connector (Transmitter)

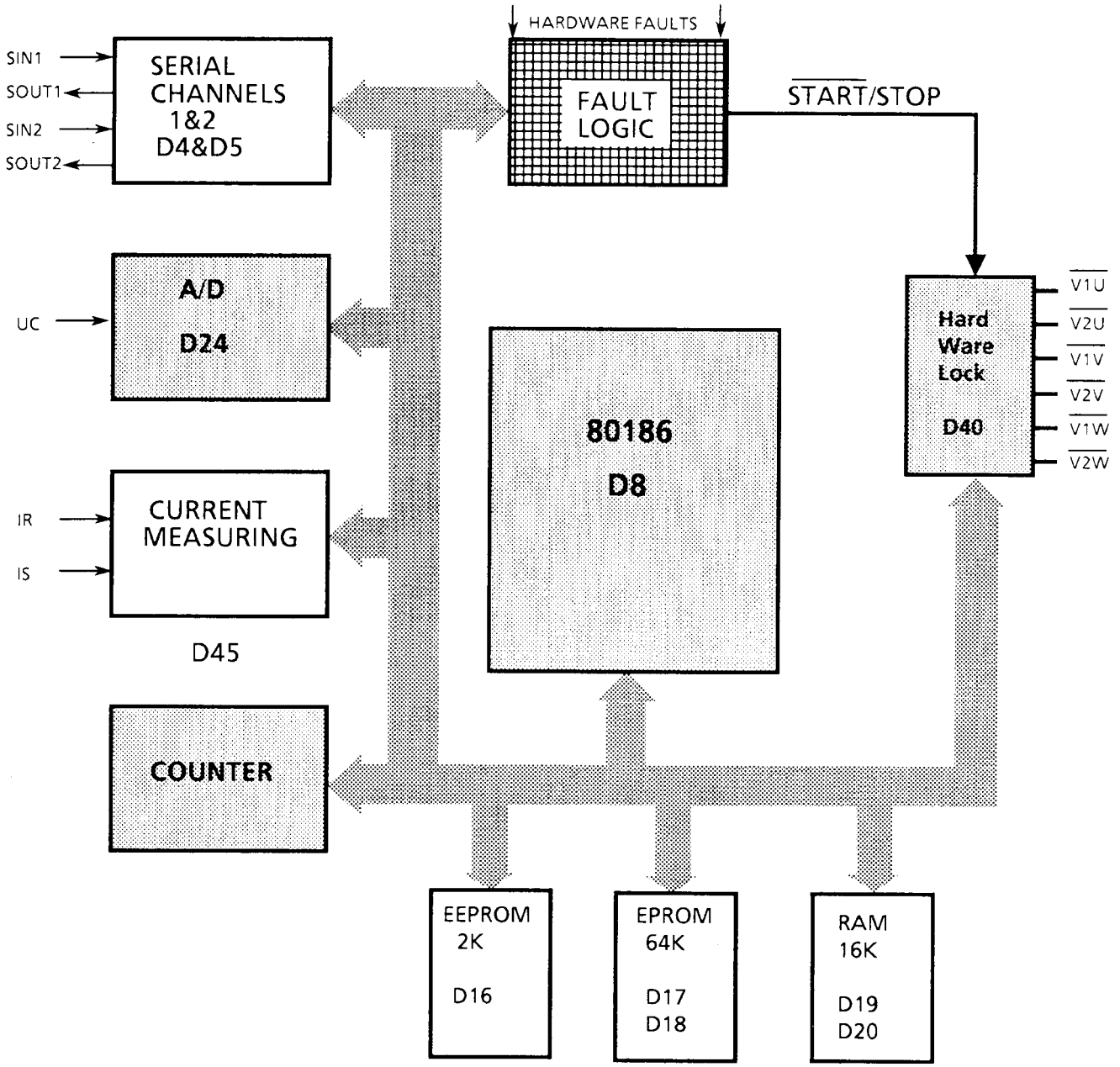

Figure 3-20. Bulletin 1352 Control Card Block Diagram

3-2.4.2 Power Supply Card (SAFT 106 POW/3500-P06 thru P11) - The Power Supply card (Figures 3-21 & 3-22) receives power directly from the D.C. Intermediate circuits, or in some cases from the mains thru the auxiliary power card SAFT 145 APC.

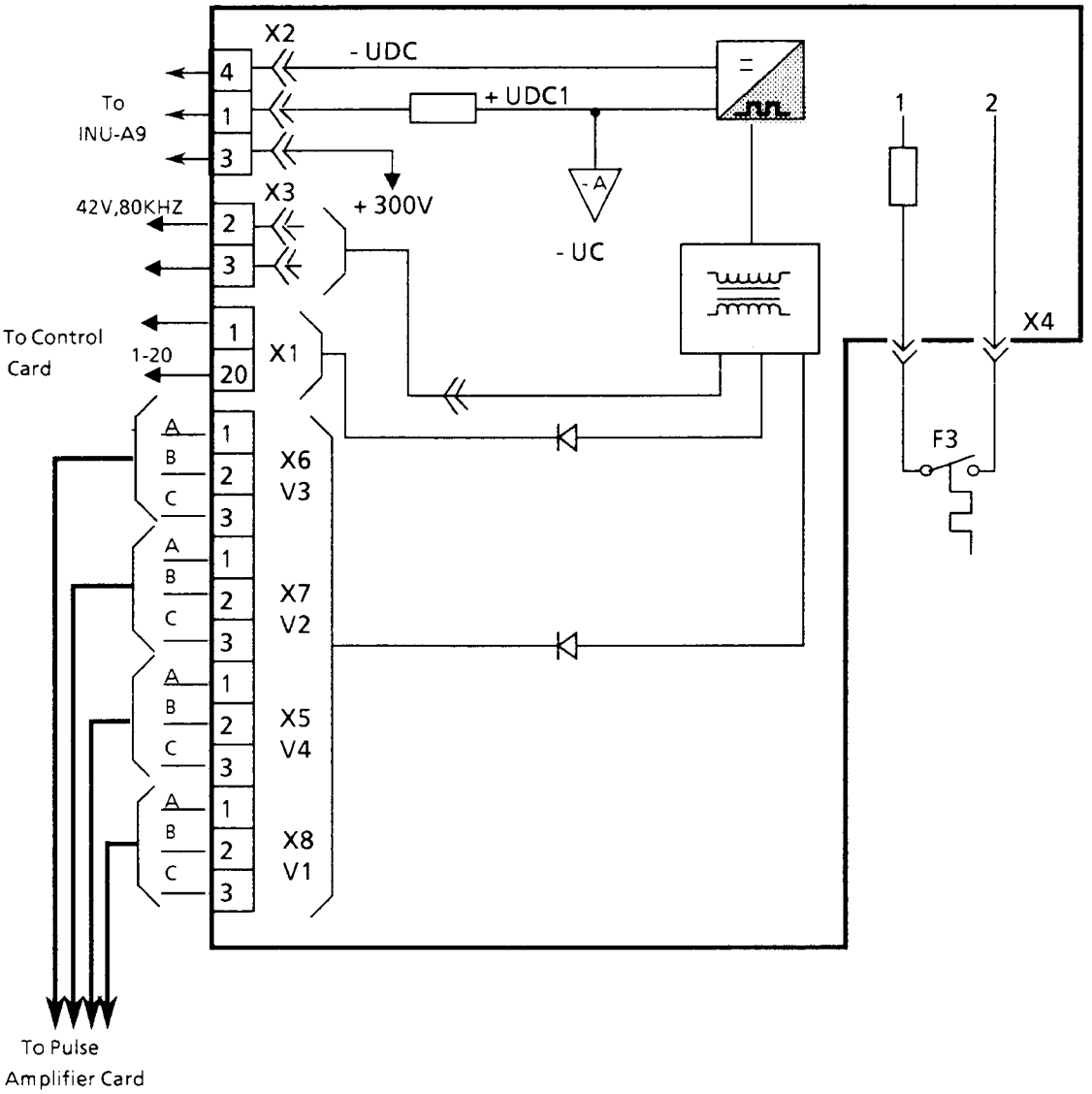

Figure 3-21. Bulletin 1352 Power Supply Card (INU-A3) Connection

The Power Supply card provides the Control Card with stabilized and filtered voltage of ± 14 volts and ± 5 volts.It also provides 42V 80Khz to the Terminal Block Card and four (4) +5V outputs to the Pulse Amplifier Card. The card includes the circuits needed for voltage measurements.

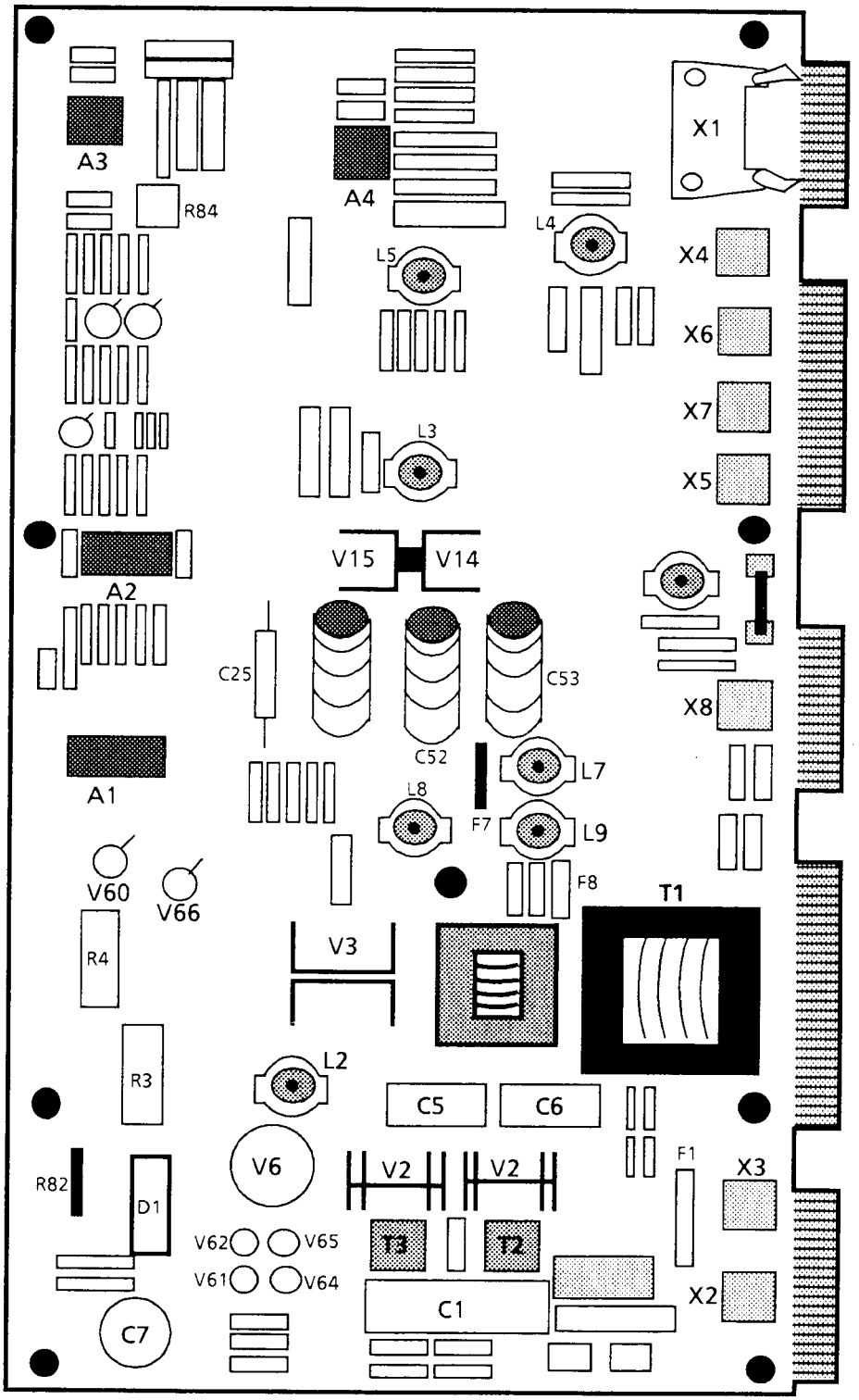

Figure 3-22. Bulletin 1352 50 KVA Power Supply Card (INU-A3)

3-2.4.3 GTR Pulse Amplifier Card (SAFT 115 PAC/3500- A15-A19) - The pulse amplifiers of the GTR Inverter are contained on one card. (Figures 3-23 & 24). The power supply card delivers ±5V to the pulse amplifier card. Control Card (A2) determines the firing and turn off signals of each transistor.

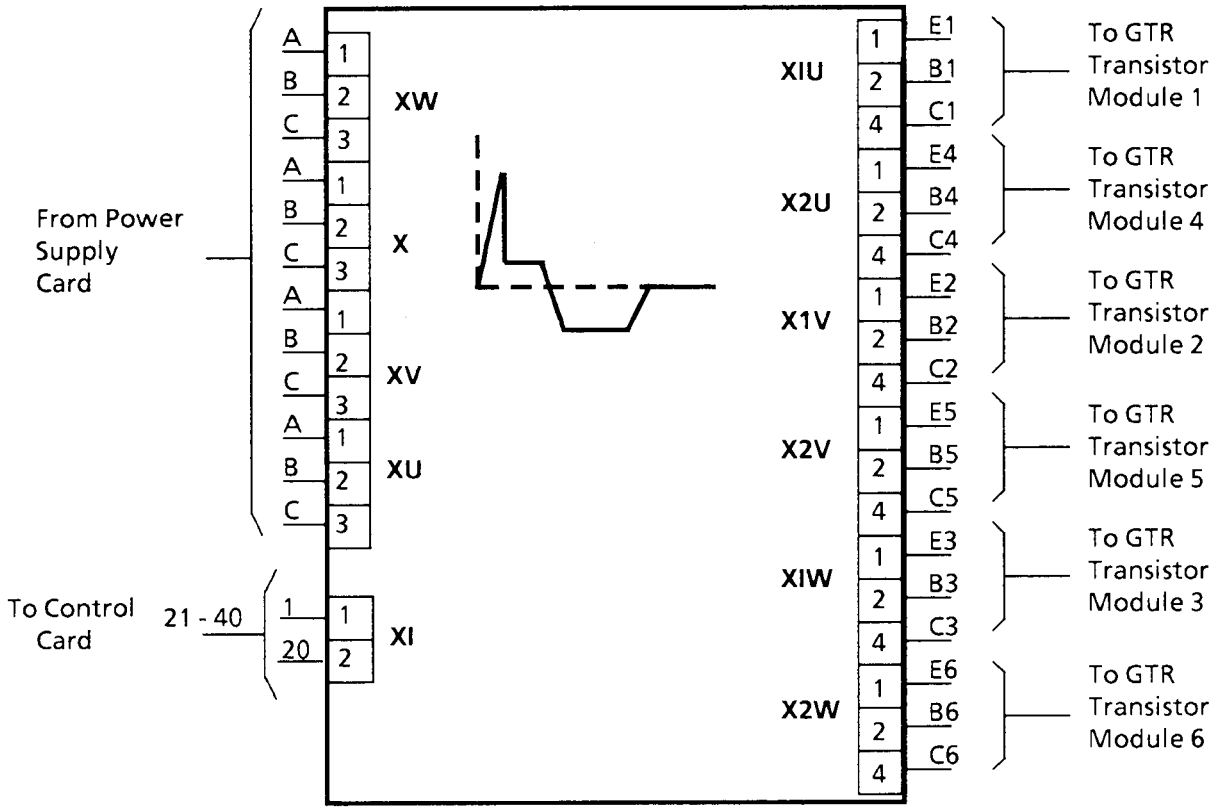

Figure 3-23. Bulletin 1352 GTR Pulse Amplifier Card (INU-A4) Connection

Logic on the pulse amplifier card monitors the condition of the power semiconductors and inhibits shoot-thru control, even if the control card gives false control signals.

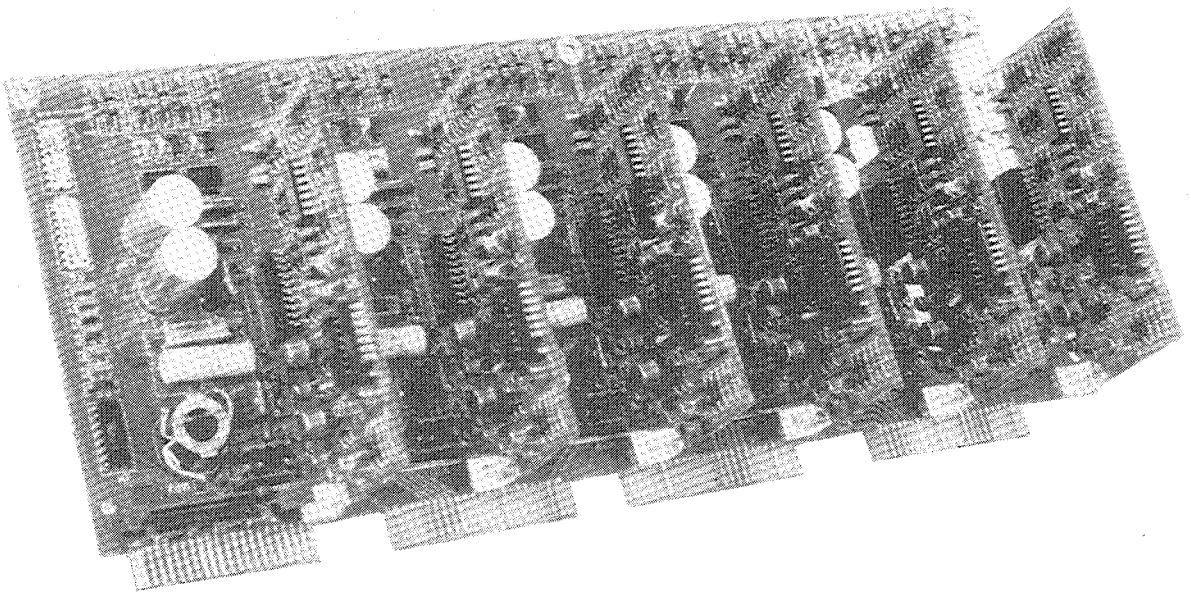

Figure 3-24. Bulletin 1352 GTR Pulse Amplifier Card (INU - A4)

3-2.4.4 GTO Pulse Amplifier Card (3500-A15-A19) - The GTO thyristor firing and turn off signals are controlled by the main control card INU - A2. The GTO equipped units use three pulse amplifier cards INU-A4-A6 (Figure 3-25) which form their auxiliary voltages from the 42V 80KHz voltage supplied by the power supply card INU - A3. GTO pulse amplifier cards are phase specific and contain upper and lower branch pulse amplifier channels. A shared logic unit forms the control commands for both pulse amplifier channels. The pulse amplifiers are isolated from the logic unit by optocouplers. A 40 pole flat cable provides the interface between the logic unit and external sources.

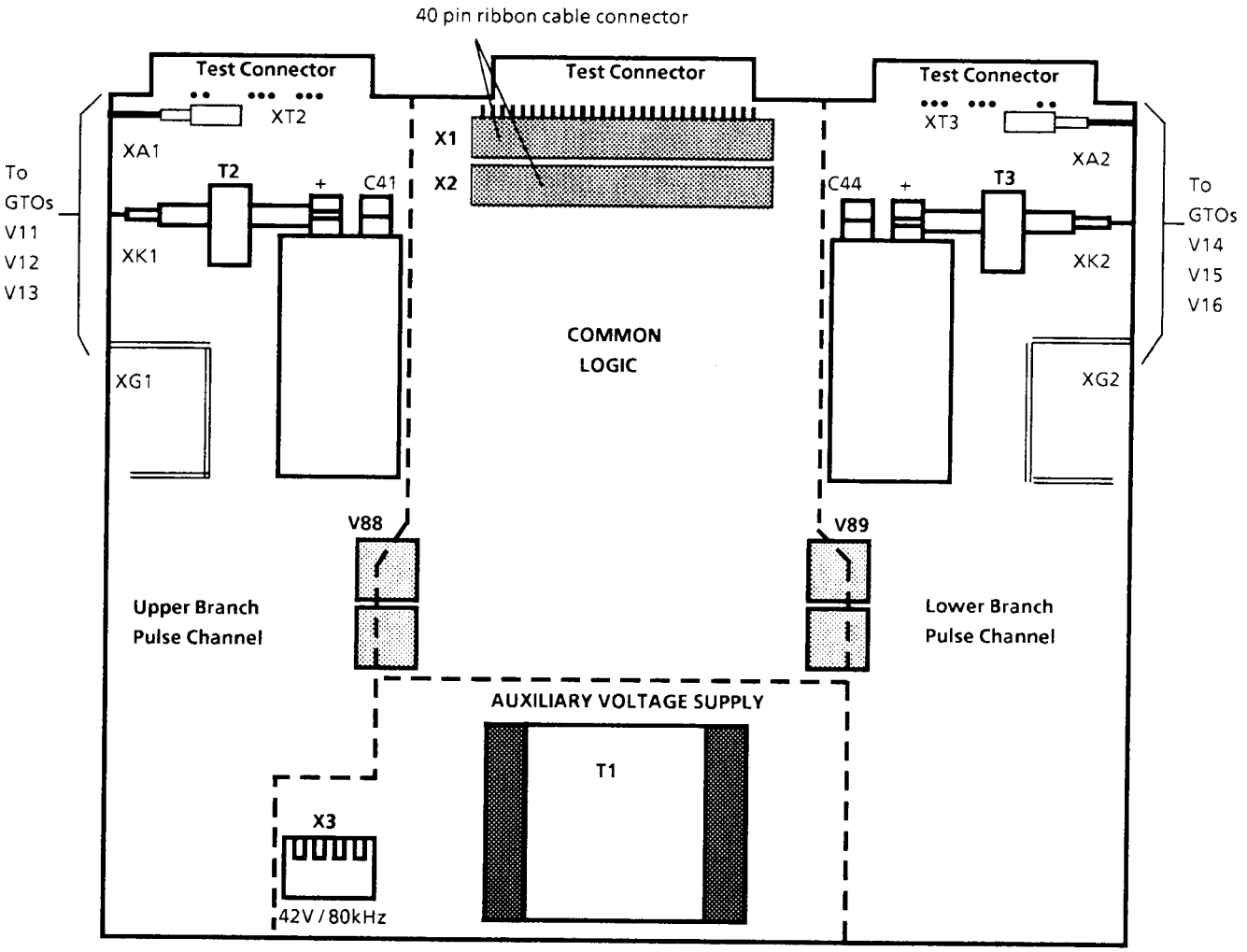

Figure 3-25. Bulletin 1352 GTO Pulse Amplifier Card

3-2.4.5 **GTO Chopper Control Card (3500-CHC)** - The chopper control card (Figure 3-26) controls the on & off gating of thyristor V-17 in the chopper unit. This is used to limit the amount of energy being fed back to the intermediate D.C. circuit thru the snubber capacitors and choke. The chopper control card receives feedback signals from the chopper power stage which it uses in forming the control logic.

Terminal connector X1 is the 40 pole flat cable connector for outside interface with the chopper control card. The X2 terminal is the connection for the incoming 42V / 80 kHz supply to the pulse amplifier. The temperature sensor connects thru terminal X3. Anode voltage, power stage busbar voltage (+) and voltage to the 2nd pin of capacitors C71 and C72 is thru terminal X4.

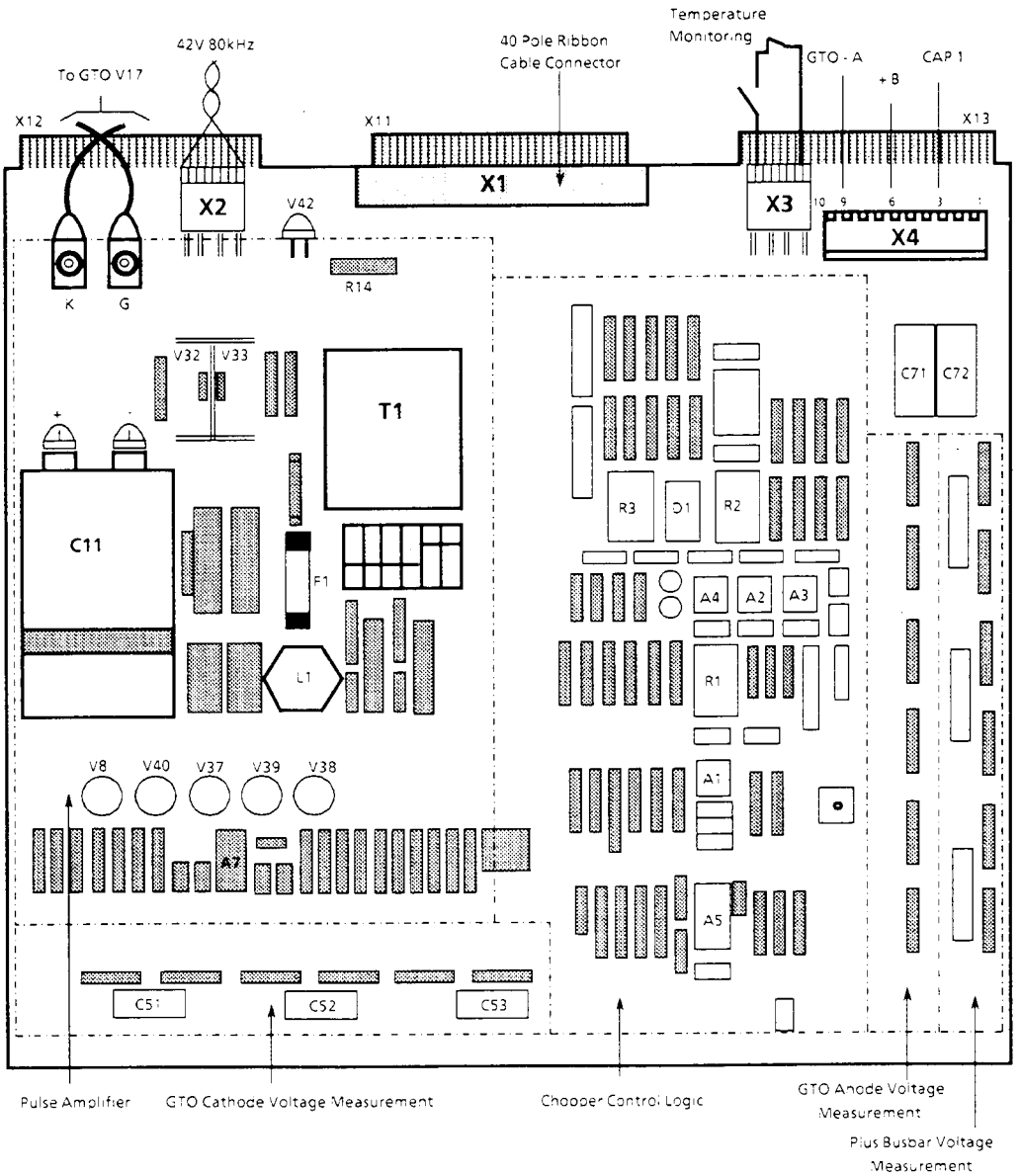

Figure 3-26. GTO Chopper Control Card

3-2.4.6 **Terminal Block Card (SAFT 143 TBC/3500-T43)** - The Terminal Block Card (Figures 3-27 & 3-28) provides the connection between the Control Card and external devices such as the control panel.

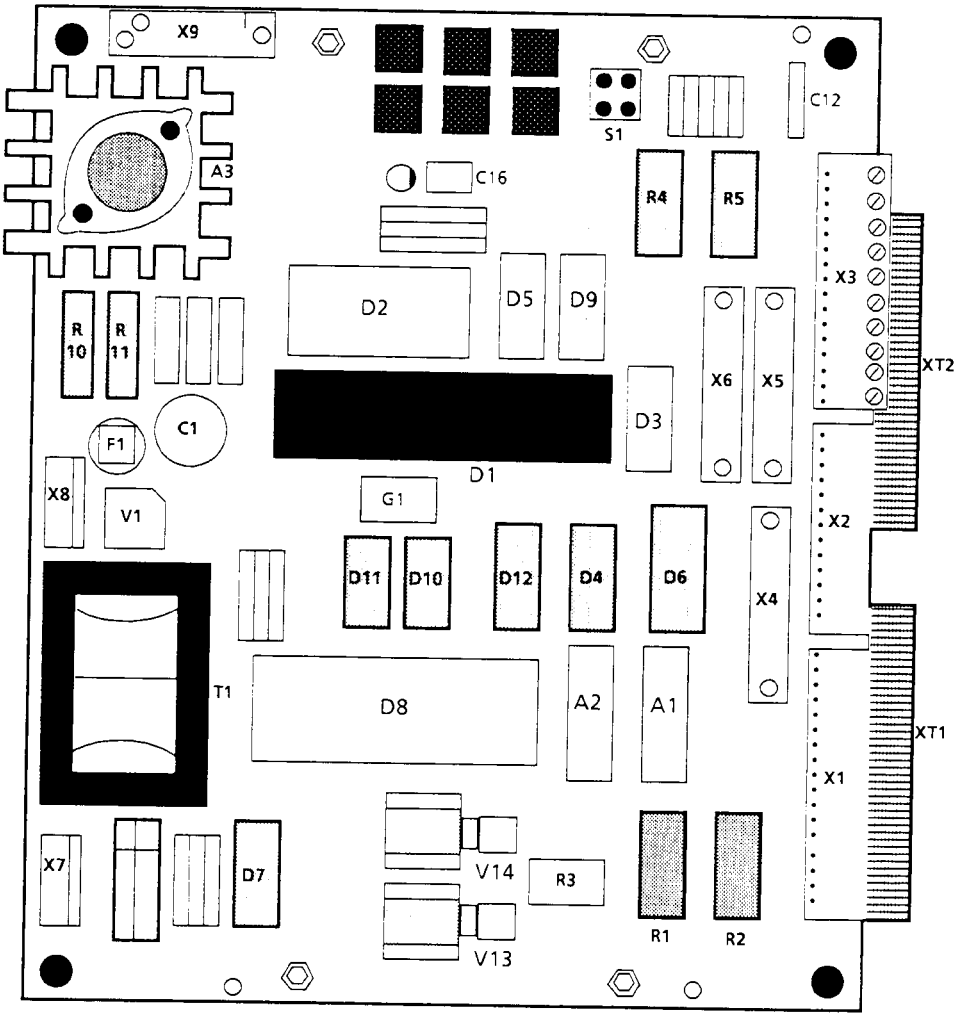

Figure 3-27. Bulletin 1352 Terminal Block Card (INU - A1)

Figure 3-27. Legend

Designation	Description	Designation	Description
A1,A2	Comparator Block	T1	Transformer 42V/2 (2x14) V 80KHZ
A3	Voltage Regulator, 5V,1A	**S1**	**Selector,**
D1	Microprocessor 8 Bit,12 mHz		**JUMPER A-B for 0..20mA or 4..20mA**
D2	Programmed EPROM		**JUMPER A-C for 0 ..5V input**
D10,D11	D/A Converter, 8 BIT BIN Current Output		
D12	D/A Converter - UP System Compatible	V13,V14	Optical Connector
F1	Fuse	X1,X2,X3	10 Nap Plug Connector
G1	Power Crystal 7.37 mHZ	X4,X5,X6	20 NAP Plug Connector
		X7,X8	4 NAP Terminal Block

Fiber optics provide the connection between the terminal block card and the control card. The use of fiber optics provides galvanic isolation and shields the signal channel from external disturbances.
+24V is generated on the terminal block card for use by the control panel or other external devices.

The terminal block card contains the following external connections:

- Three +24V connections and one +13V connection.
- Eight digital inputs from the A.C. Interface Card.
- Eight digital outputs, four of which go to the A.C. Connection Card.
- 20 pin Interface connection to the Control Panel CP1.
- Interface to the Analog Input Card.
- Two Analog Outputs (0..5V or 0..1mA).
- One Analog Input (0..5V or 0..20mA or 4..20mA).

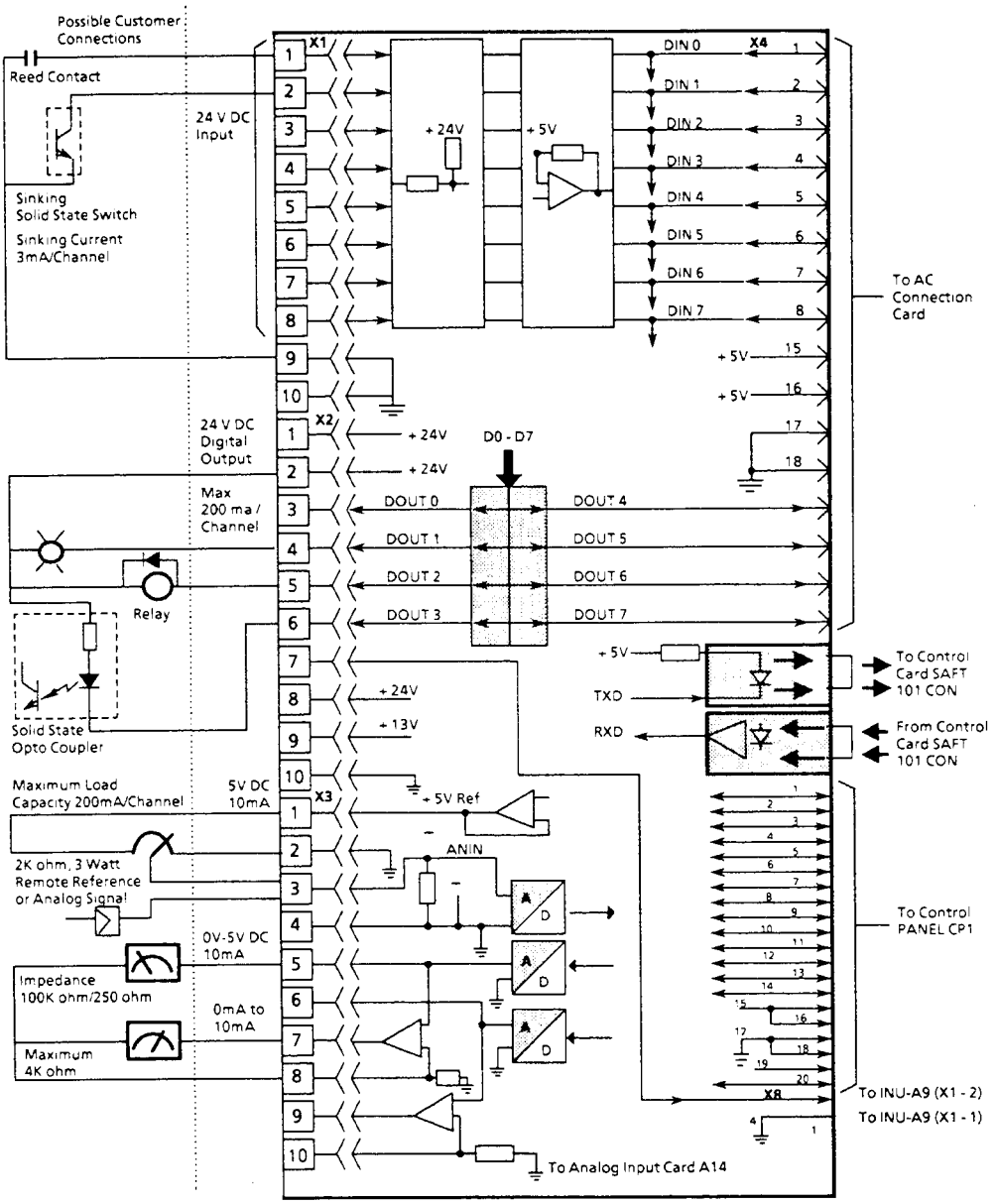

Figure 3-28. Terminal Block Card Connection

3-2.4.7 **Auxiliary Power Card (SAFT-146/3500-APC)** - The Auxiliary Power Card (Figure 3-29) provides the Power Supply Card with an extra 300 volts during start-up situations. The Auxiliary Power Card also acts as the Power Supply Cards main voltage source when the inverter is run in the simulation mode.

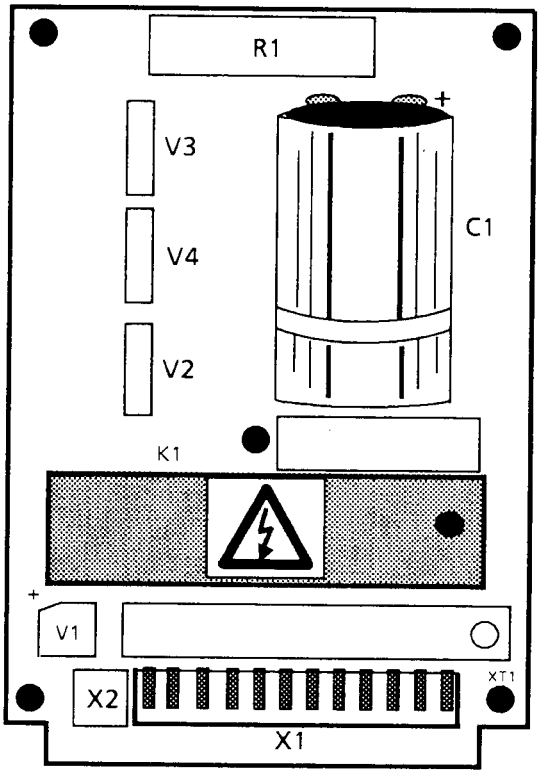

Figure 3-29. Auxiliary Power Supply Card (INU-A9)

3-2.4.8 **Matching Card. (SAFT 050 F460/3501-050)** - The Matching Card (Fig. 3-30) is mounted on the Control Card and provides a matching circuit for the intermediate circuit voltage (UC1) and inverter phase currents (IU1,IV1) based on the KVA rating of the drive.

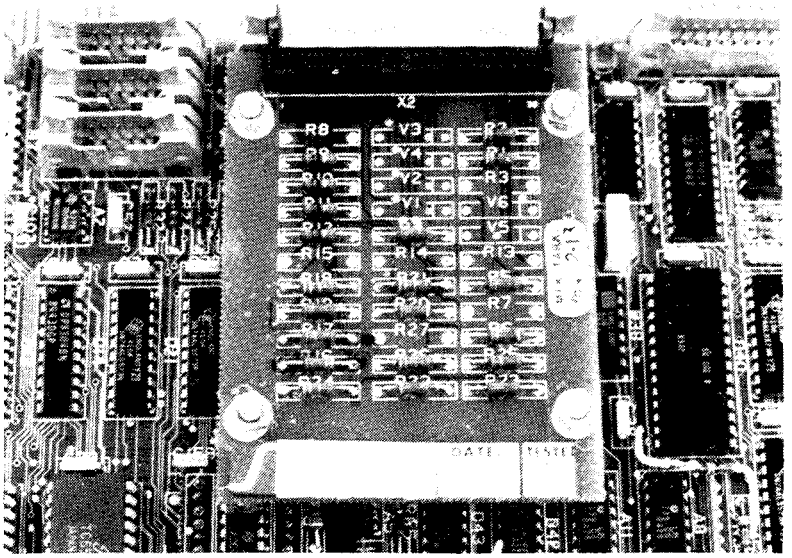

Figure 3-30. Matching Card

3-2.4.9 **A1 Supply Unit Control Card (SAFT - 136 CTS/3500-CTS)** - The CTS Card (Figure 3-31) which is used on all Series A and GTO Series B drives, monitors the condition of the Line Supply Unit and controls the operation of the main contactor and the charging capacitor . The A1 card operates on 24V D.C. current. A 220 volt auxiliary output is available on the card. Five (5) LED's indicate the operating state or abnormal conditions in the LSU unit.

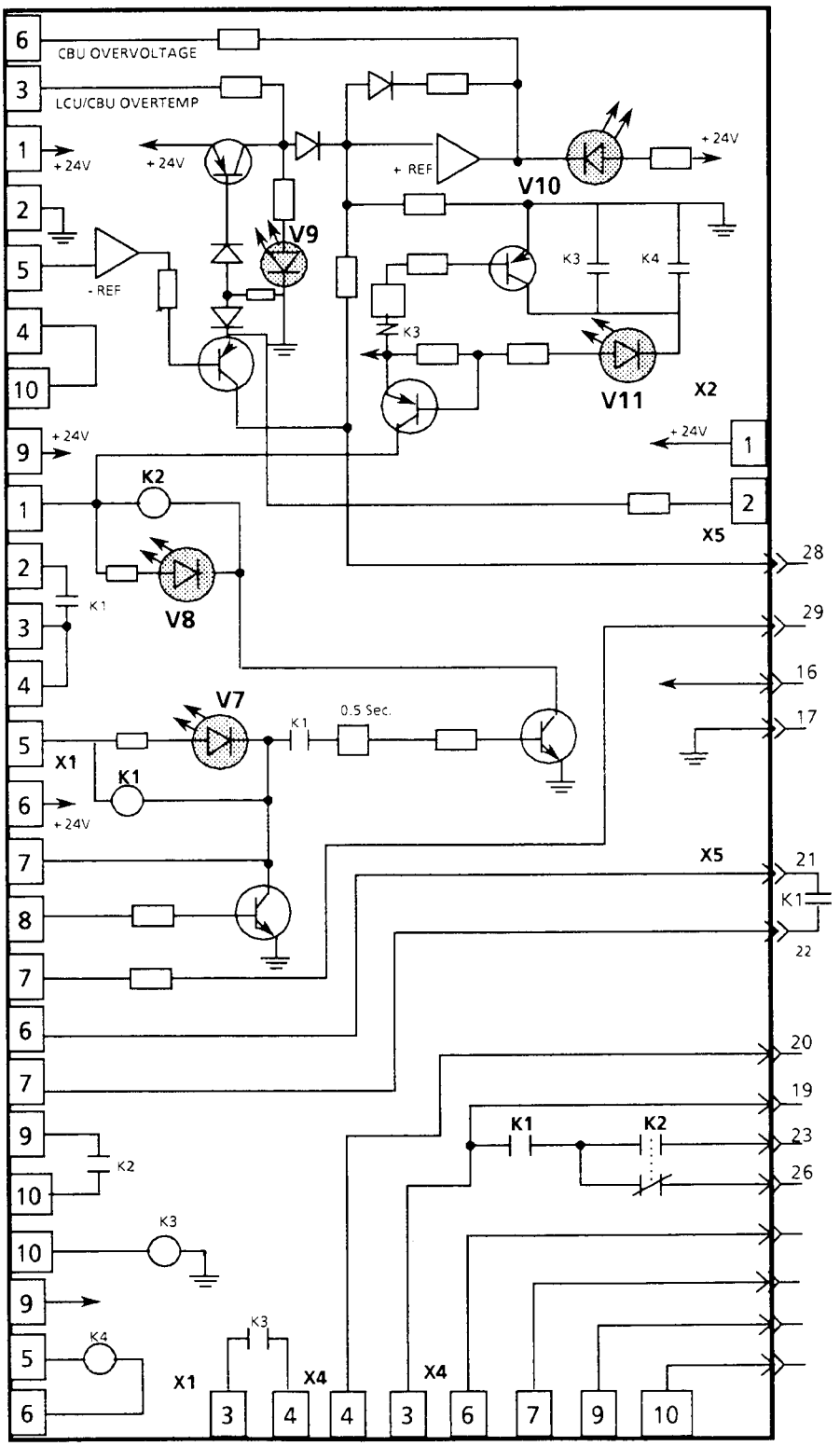

Figure 3-31. A1 Supply Unit Contactor Control Card (LSU- A1)

3-2.4.10 **Options** - The following options are available for use with the 1352 Drive:

- Fiber Optic Connection Card (SAFT 148 FOC/3500-FOC)
- AC Connection Card (SAFT 146 ACC/3500-AC1)
- Analog Input Card (SAFT 149 INP/3500-INP)
- BRC Control Module (3500 - BRC)

3-2.4.10.1 **Fiber Optic Connection Card** - The Fiber Optic Connection Card (Figure 3-32 & 3-33) can be used to connect the control card to a CP2 type control panel or the PLC Interface Module. Four fiber optic links connect this card to the control card. The Fiber Optic card has external connections for:

- +24V and +12V
- 1 Bidirectional serial interface.

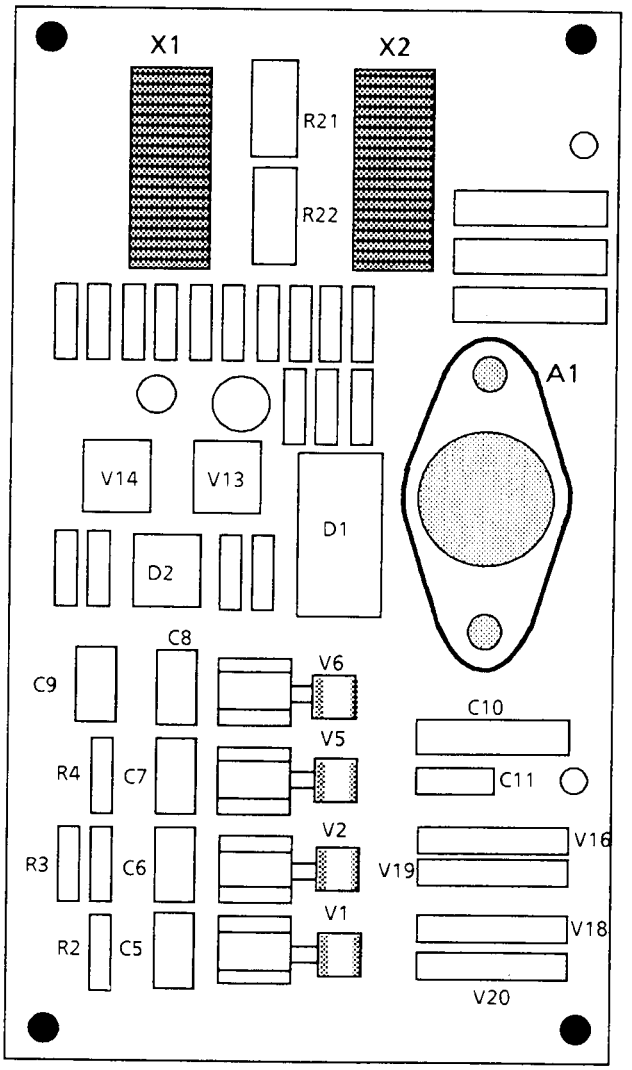

Figure 3-32. Fiber Optic Connection Card

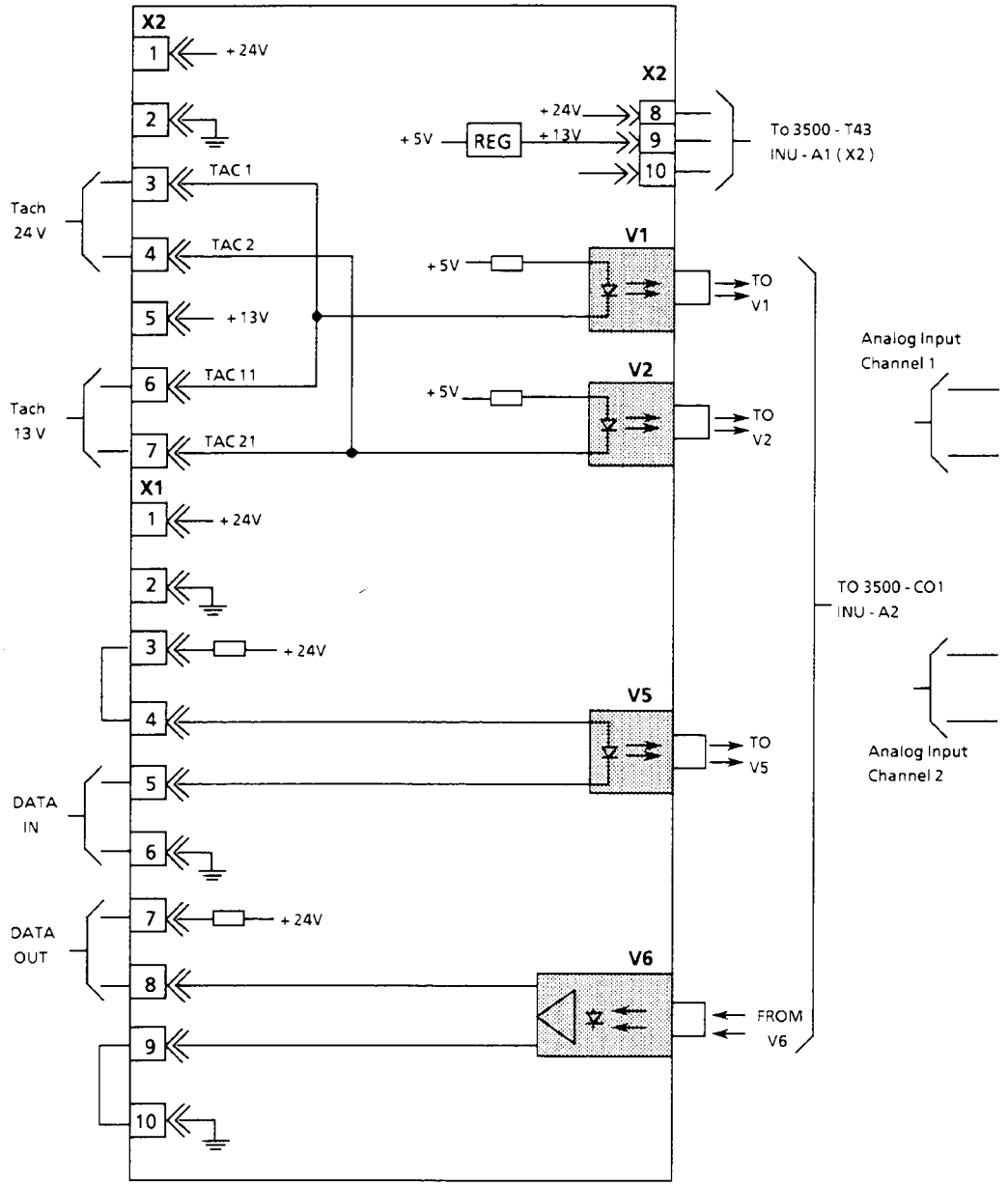

Figure 3-33. Fiber Optic Card (3500 -FOC) External Connections

3-2.4.10.2 **Analog Input Card** - The Analog Input Card (Figure 3-34 & 3-35) is used for analog isolation and expansion, when two simultaneous analog signals are needed to control the 1352 Drive. The card contains two separate galvanically isolated analog input signals of: 0-5V, 0-20mA or 4-20mA.

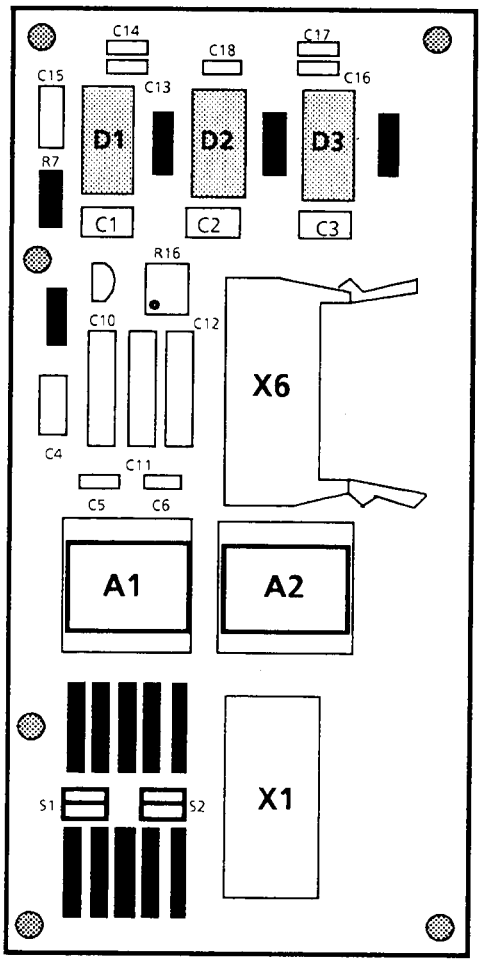

Figure 3-34. Analog Input Card (SAFT 149 INP)

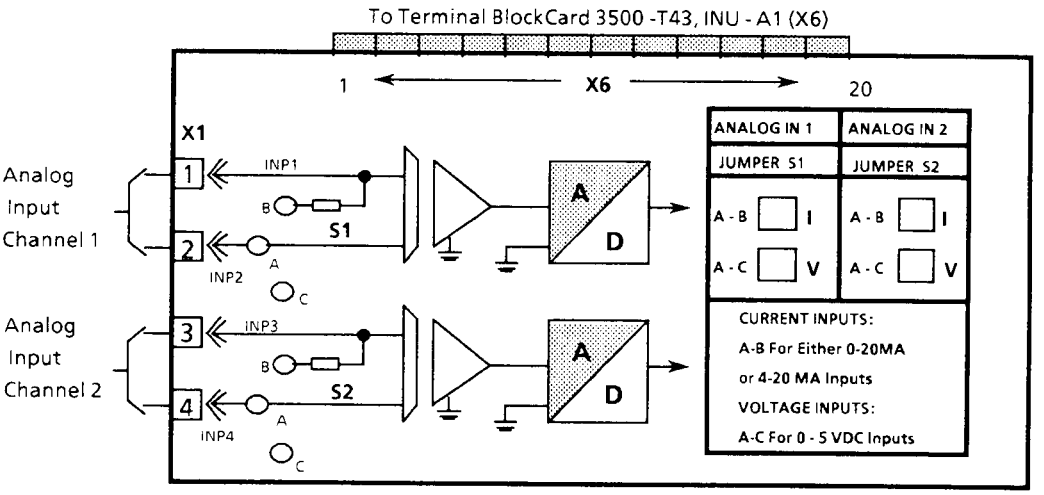

Figure 3-35. Analog Input Card (SAFT 149 INP/3500 -INP) External Connections

3-2.4.10.3 **A.C. Connection Card** - The A.C. Connection Card (Figure 3-36 & 37) is used when the drive will be controlled by external 110V AC digital signals. The card contains eight (8) inputs for 90-135 VAC and four (4) digital outputs with 110 V ratings (1 ampere max load, non - inductive).

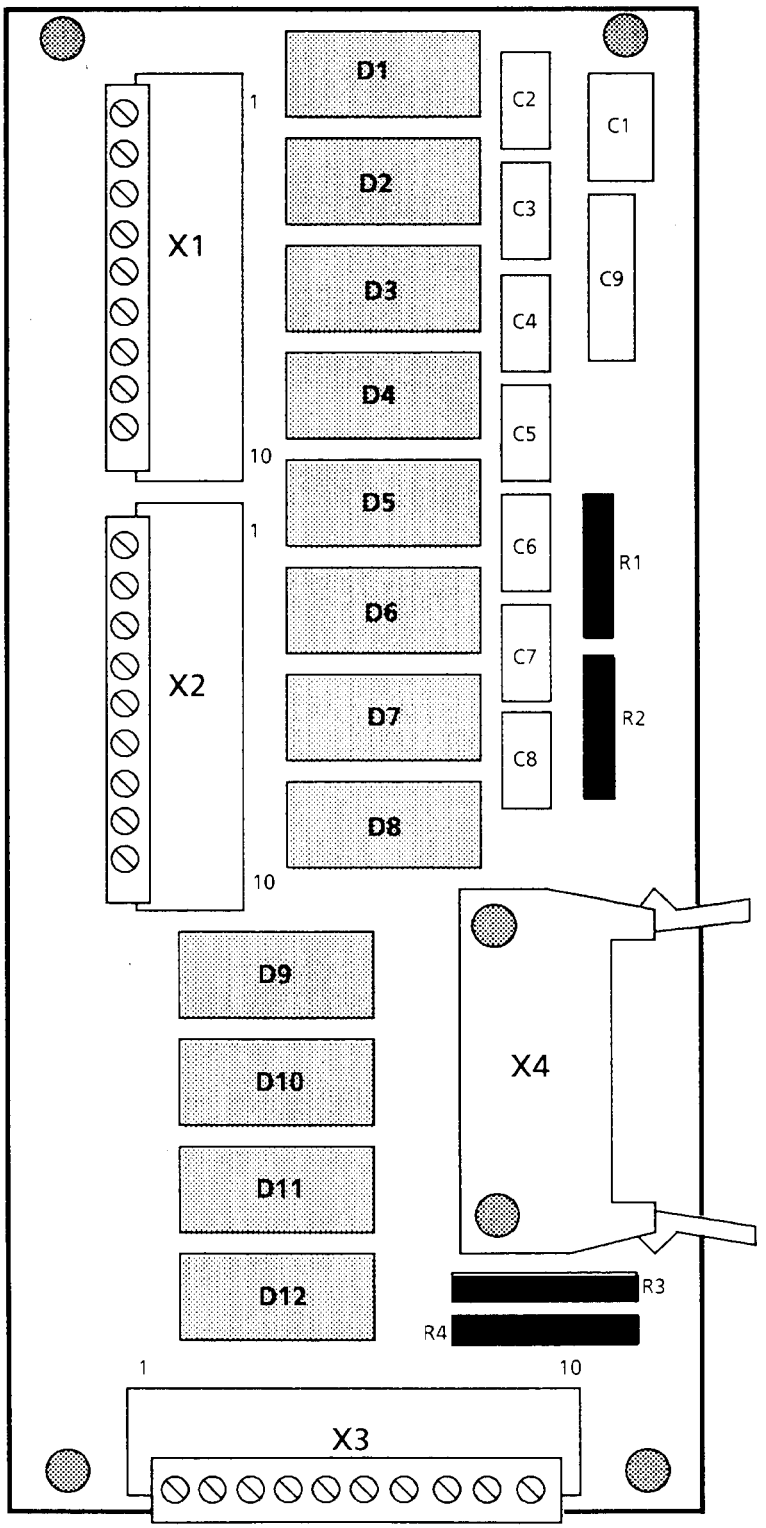

Figure 3-36. A.C. Connection Card (SAFT 146 ACC/3500 - AC1)

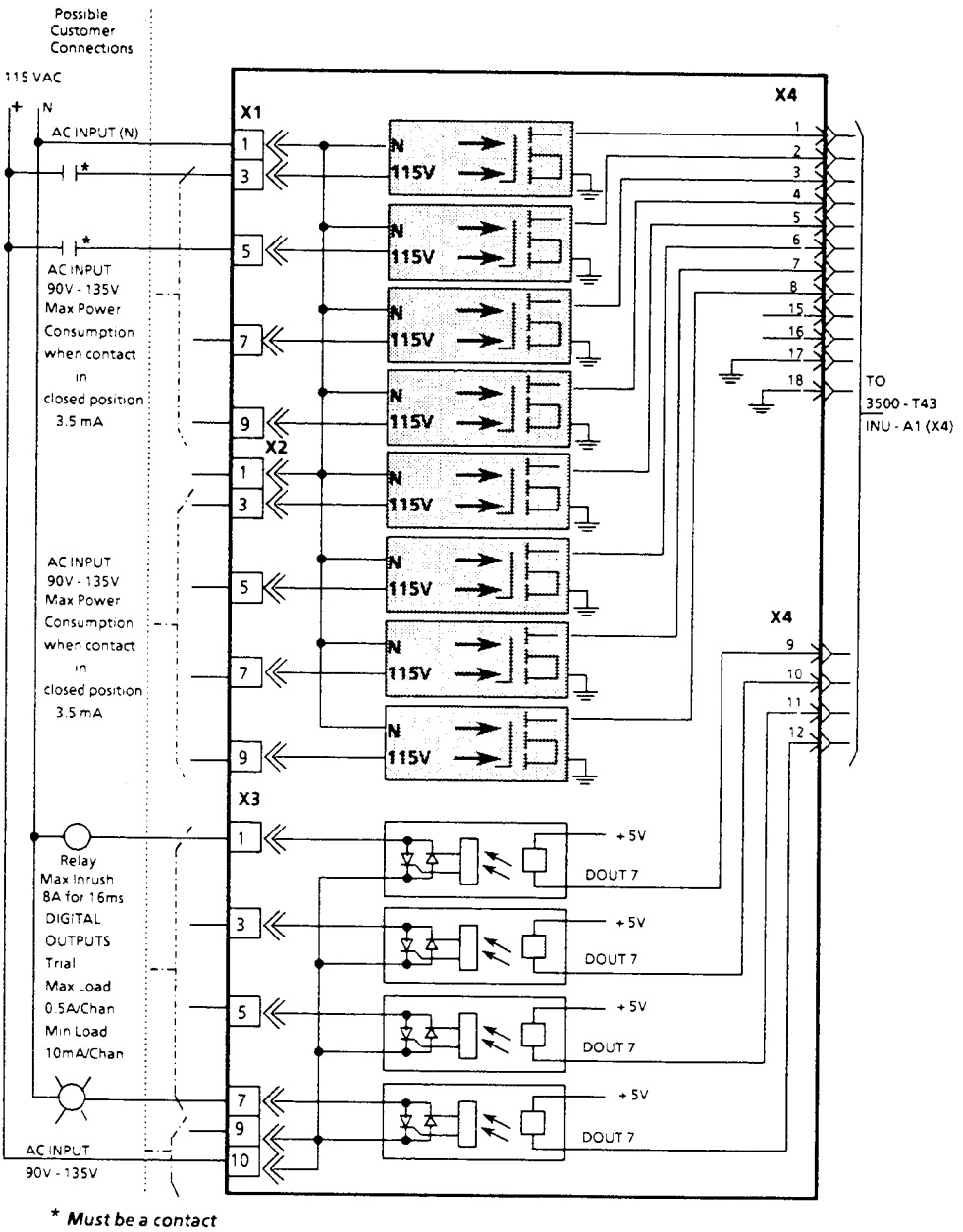

* *Must be a contact*

Figure 3-37. A.C Connection Card (SAFT 146 ACC / 3500 - AC1) External Connections

3-2.4.10.4 **Dynamic Braking** - The 1352 Dynamic Braking System is an option available to increase braking power of the drive and enable controlled stopping of the motor and load.

The braking system module is comprized of two major components and is available in three power ratings.

The Braking Chopper (BRC) consists of a control card which monitors bus voltage levels and develops correct logic signals, and a GTO and freewheeling diode switching circuit (Fig. 3- 38). The Dynamic Braking Resistor Unit (BRR) is an assembly of power resistors which are sized to dissipate the excess power up to the rating of the braking system.

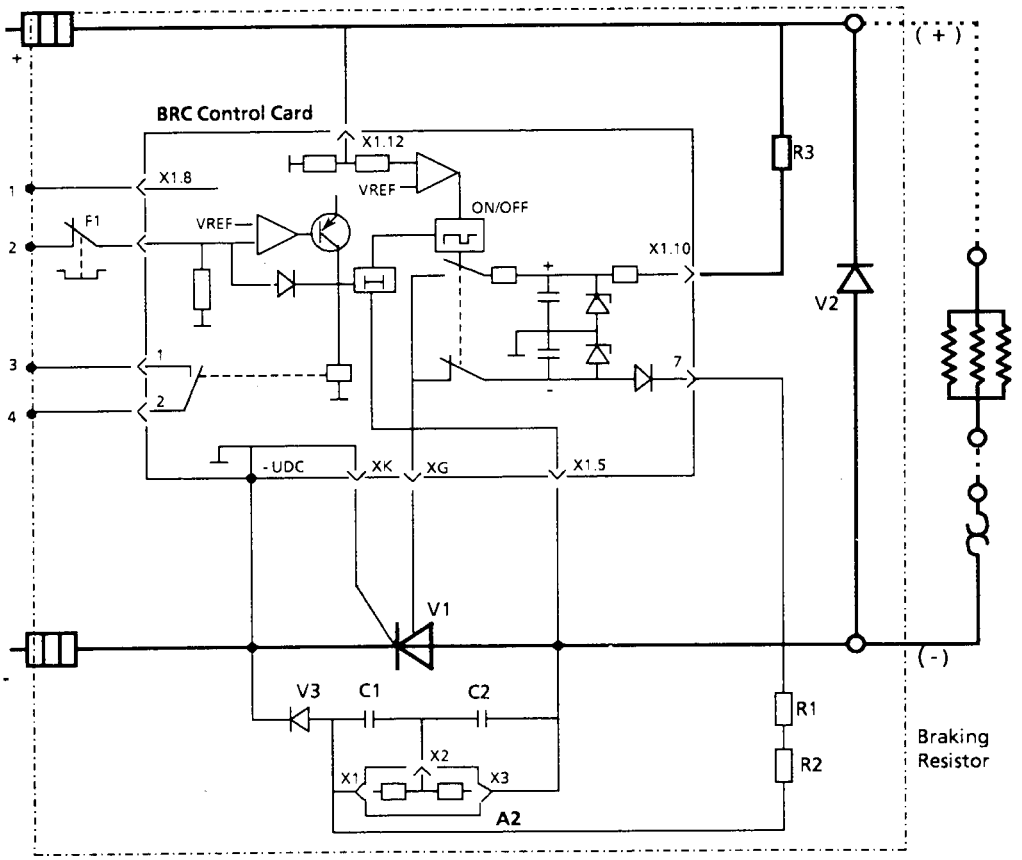

Figure 3-38. Braking Unit Block Diagram.

The 1352 Dynamic Braking Systems are available in power ratings of 75, 115 and 180 kilowatts. These systems are designed to provide up to 100% rated braking power for 20 seconds with a 20% duty cycle.

The Braking chopper module operates on the negative potential and receives auxiliary voltage from the (+) bus thru resistor R3.

When the V1 diode is in the conducting state, intermediate circuit voltage is applied across the braking resistor connected to the terminals R+ and R-. During turnoff, inductive current from the resistor circuit passes thru free - wheeling diode V2.

WARNING: The Dynamic braking resistors and their associated wiring are connected to the DC Bus and are at bus potential (approximately 640VDC) anytime the DC Bus is charged. To avoid hazard of electrical shock, disconnect all sources of power and verify with a voltmeter that their are no voltages present before attempting to service any part of the drive or dynamic braking system. The customer must take all precautions to correctly install and maintain the braking resistors and related wiring according to prevailing local and national codes.

Setting of the chopper control is accomplished by moving the selector jumper (S1 in Figure 3-39) located on the upper part of the circuit card inside the chopper unit to the proper position. The jumper should be positioned at the location labled "460" for 460 VAC supply voltage, or "575" for 575 VAC supply voltage. The correct supply voltage rating for a particular drive can be verified on the drive nameplate located near the supply connections inside the cabinet.

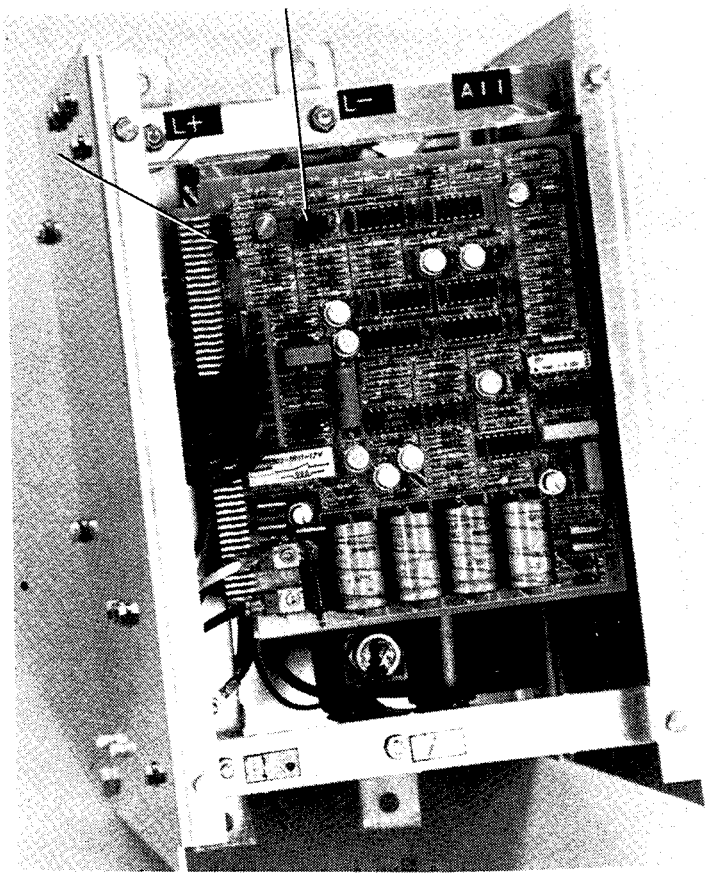

Figure 3-39. Selector S1 and L.E.D. V22 on Chopper Control Card

The Red L.E.D. on the Chopper Control Card (V22) indicates when the bus is charged and the Chopper Control Card has its operating Voltages.

WARNING: The Red V22 L.E.D. on the Chopper Control Card must not be considered a safety indicator for servicing the dynamic braking system, as it will not accurately indicate that all voltages are removed from the circuits. To avoid injury, only a DC voltmeter should be used to test for the absence of voltages before servicing any part of the drive or dynamic braking system.

3-2.5 **Control Panel 1 (SAFP 11 PAN/3500-CP1)** - Bulletin 1352 Drives used in single motor applications use a CP1 control panel to control drive operation and to alter drive parameters (Figure 3-40).

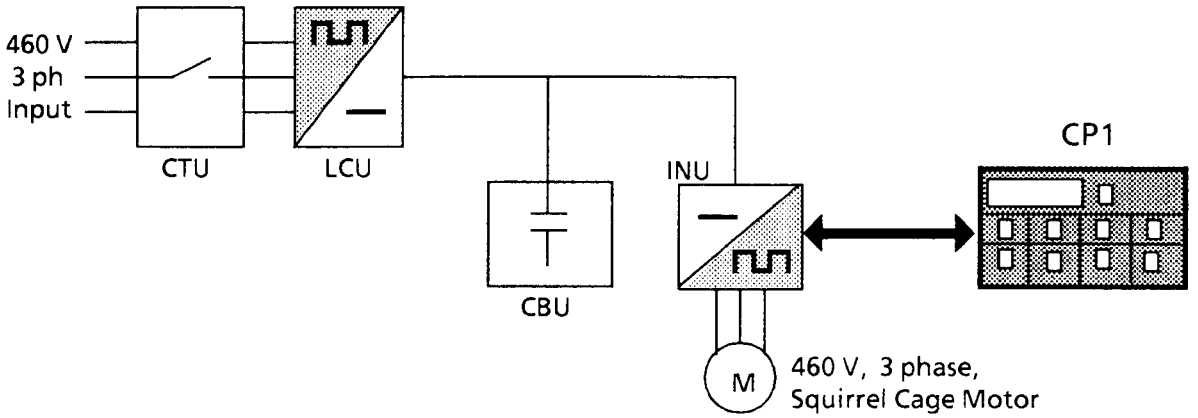

Figure 3-40. Control Panel CP1 in a single-motor drive

The CP1 panel (Figure 3-41) is installed in the door of the cabinet and is connected to the terminal block card by a 20 pole flat cable. The panel contains 9 pushbuttons and a digital display. The CP1 panel cannot be used for remote control.

All set-up, operation and troubleshooting of the drive can be carried out thru the control panel. The functions of the panel include:

- Providing operational commands (such as start/stop or frequency reference) to the drive.
- Monitoring drive operation (indication of frequency or load).
- Fault diagnostics
- Parameter setting.

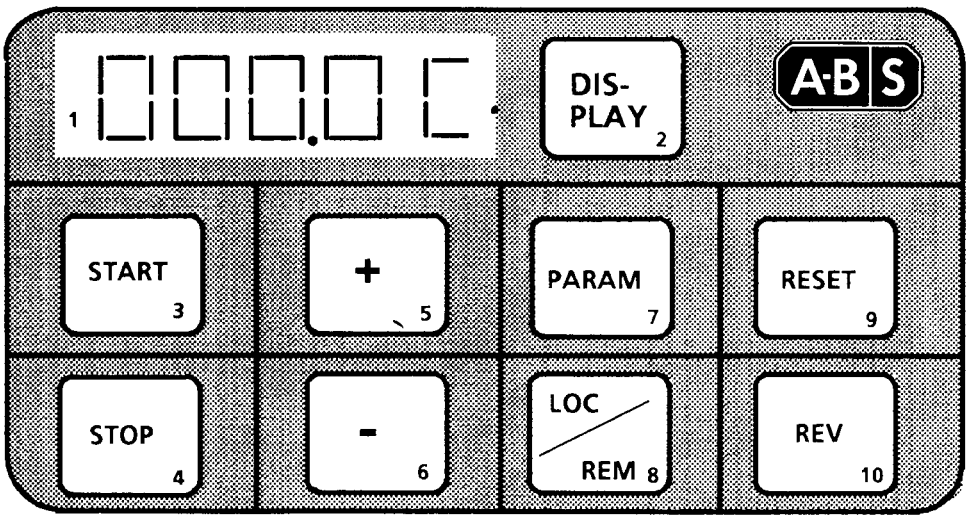

Figure 3-41. Bulletin 1352 CP-1 Control Panel.

Figures 3-41 & 42 Legend

NO.	FUNCTION
1	Six Digit Display (Parameter Numbers, Fault Codes)
2	Display Selection: Frequency Reference, Current or Frequency Actual Value, Parameter Value.
3	Drive Start
4	Drive Stop
5	Increase Frequency Reference, Increment Parameter Numbers
6	Decrease Frequency Reference, Decrement Parameter Numbers
7	Parameter Number Selection
8	Selection of Local or Remote Control
9	Fault Reset and Parameter Value Storage
10	Programmable Key (Reversing)

In the normal operating mode, pushing the display button (Figure 3-41) will provide readings on:

- Drive Frequency References
- Output Frequency
- Motor Load
- Output Voltage

Pushing the display button provides indexing from one display to the next.

The readings are identified by programmable code letters that appear after the readout on the display (Figure 3-42).

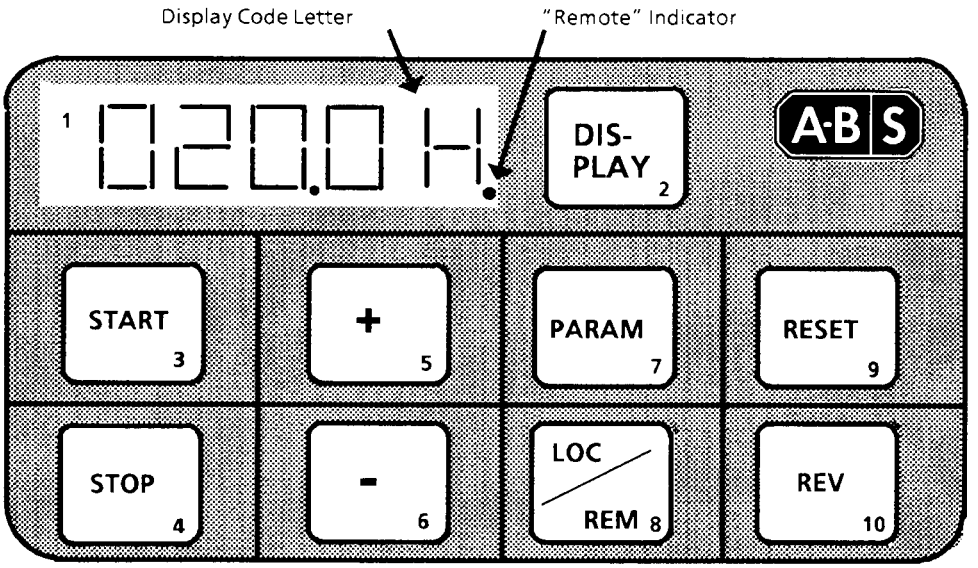

Figure 3-42. Control Panel Display Code

Fifteen (15) programmable code letters are available for customer use. Five (5) of the codes have been preset at the factory to indicate the following readouts:

C Control Panel 1 Local Frequency Reference

r REMOTE Frequency Reference

H Output Frequency (Hertz)

A Motor Load Current

U Output Voltage

If a fault occurs, a diagnostic code (Figure 3-43) corresponding to one of the following faults will be displayed:

- Overcurrent
- Undervoltage
- Overvoltage
- Overtemperature
- Semiconductor Fault or Failure
- Processor Fault or Failure
- Line Supply Unit (LSU) Failure
- External Interlock

For detailed explanations on Diagnostic codes and their probable causes see Chapter VI Supervision and Visual Warning.

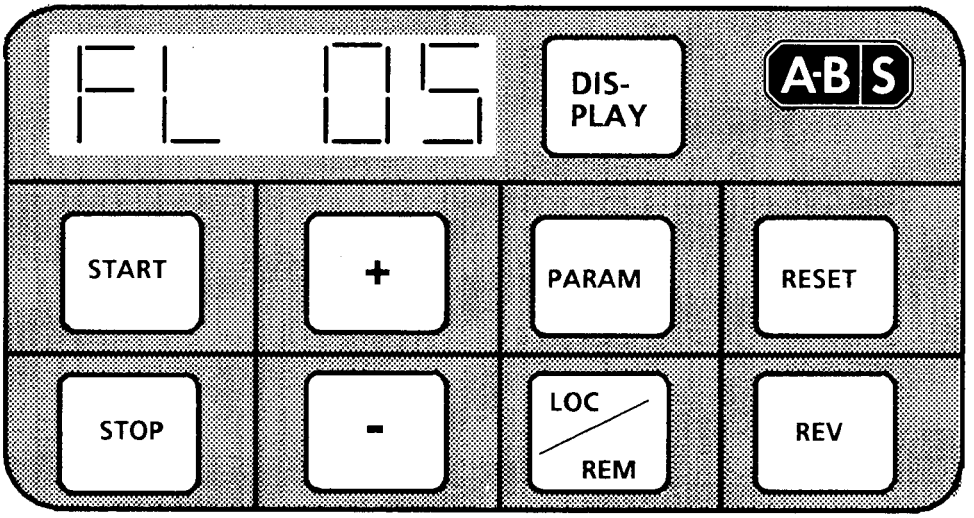

Figure 3-43. Control Panel Fault Code Display.

Parameters that can be changed using the control panel include:

- Frequency Reference Integration Time
- Maximum and Minimum Frequency
- Torque Limit
- Field-Weakening Point
- IR Compensation
- Speed (Maximum, Minimum and Crawl)
- Ramping Rates
- Scaling Factors

A parameter can be changed following these steps:

1. Press the **PARAM** Button.
2. Display shows **P_0001**.
3. Press " + " or "-" to reach the desired parameter number.
4. Press **DISPLAY** to examine the value or contents of that parameter.
5. If you wish to change the value, press " + " or "-" to reach the desired value.
6. Press **RESET** to enter the new value into the parameter.

IMPORTANT: For final parameter changes to be acknowledged and stored in EEPROM, it is necessary to set parameter 008 (EEPROMLOCK) to 1 before resetting the value. When writing new values to EEPROM memory, allow at least two (2) minutes for the change to be written to memory before interrupting the power.

Many of the parameters have preset minimum and maximum values. If an attempt is made to enter a value that is outside the range, **FL23** (too small) or **FL24** (too large) will be displayed on the panel. Entering a number that is within the parameter range is necessary to clear the fault code.

If you are unable to clear the fault in this manner, it may be necessary to cycle power with the main disconnect switch.

3-2.6 <u>Control Panel 2 (SAFP 21 PAN/ 3500 - CP2)</u> The CP2 Control Panel (Figure 3-44) is a remote control which is used when the Bulletin 1352 is controlling multiple motors, or when the Bulletin 1352 is part of a computer controlled system. When used with the Bulletin 1352, the CP-2 provides start and stop control, speed control, direction control, parameter changing capability, fault reset, and fault monitoring thru diagnostic readouts.

Figure 3-44. CP2 Control Panel

The control panel consists of 12 keys a 16 character alphanumeric display and a microprocessor controlled control unit. The display can indicate information being processed by the Control Panel, or information being sent to the control panel via the serial link from the Bulletin 1352.

3-2.6.1 Keypad Functions

Pressing the **START** key with power applied to the drive, allows the drive to accelerate to the preset speed determined by the SPEEDREF parameter.

Pressing the **STOP** key allows the drive to slow to zero speed and drop out the main contactor.

The **CRAWL** key is used in conjunction with either the + or - keys. Simultaneously pressing the **CRAWL** key and the + key starts the drive and accelerates the motor to the speed value stored in parameter SPEED1. Simultaneously pressing the **CRAWL** key and the - key starts the drive and accelerates the motor to the speed value stored in parameter SPEED2.

Pressing the **PARAM** key displays the parameters and parameter values stored in a particular location.

Simultaneously pressing the **VALUE** and the **PARAM** keys allows the value of the selected parameter to be changed.

When the **RESET** key is pressed simultaneously with the **PARAM** and **VALUE** keys, it causes the parameter value on the Control Panel display to be entered into the 1352 RAM. If a parameter value has been changed on the Control Panel as indicated by the displayed value, but the **RESET** key is not pressed, the new value of the parameter will not be entered into the RAM. In this case, the RAM retains the parameter value which was present before the change was attempted. The **RESET** key is also used to reset the Drive after a fault.

The **F3** Key is used to change the number system for parameter value display.

The +, +/- and - keys are primarily used to change number values displayed on the Control Panel. During normal run, these keys are used to directly set the speed reference value of the Bulletin 1352. Any time after power up, these keys can be used to change the speed reference value. These keys are also used to select and change parameters and parameter values as explained in Section 3-3.3. Pressing either the + or - key sets the direction of change for the value. Pressing the + key increments the value displayed in the positive direction. Pressing the - key decrements the value displayed in the negative direction. Holding either the + or - key causes continuous incrementing of the displayed value. Holding either the + or - key simultaneously with the +/- causes incrementing in the selected direction at an increased rate.

3-2.6.2 **Parameter Selection** - To select parameter locations, press the **PARAM** key and then the +, +/- or - keys to increment thru the parameter table. The display will increment at the rate determined by the key combinations used:

A. + or - key only, Increments by 1's
B. +/- key after + or - key Increments by 10's
C. +/- key and + or - key Increments by 100's

3-2.6.3 **Changing Parameter Values** - To change a value stored in a particular parameter, simultaneously press the **PARAM** and **VALUE** keys and then press the +, +/- or - keys to increment the parameter's value at the following rates:

A. + or - key only Increments by 1's
B. +/- key after + or - key Increments by 10's
C. +/- key and + or - key Increments by 1000"s

Note: Parameters with preset maximum and minimum values will increment or decrement to the preset limit and then display PARAM TOO BIG or PARAM TOO SMALL on the display. The limit value will then be entered in the parameter.

3-2.6-4 **Starting and Stopping the Drive** - Upon power up , the Control Panel will momentarily flash a message such as NO DATA TO DRIVE or WAIT, while the Drive performs various self diagnostic checks. Once these checks are complete, and assuming no errors are found, the display will change to READY status (Figure 3-45).

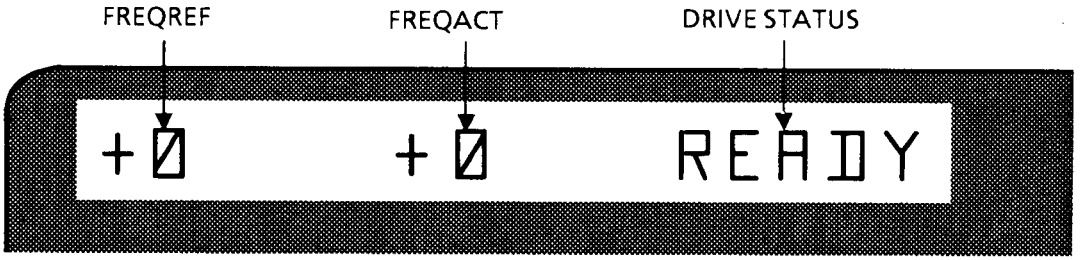

Figure 3-45. Control Panel Display After Power-Up

The three items of data that appear at power up are the current FREQREF (parm 29) and FREQACT (parm 208) settings and the READY status indication. Enter a FREQREF using the + +/- or - key.

When the START key is pressed, the drive will accelerate the motor to +500 and the display (Figure 3-45) will indicate FREQREF,FREQACT and the actual motor current.

Pressing the STOP key will cause the Drive to decelerate the motor at a rate set by FREQINDEC (parm 66). During deceleration, the FREQREF display will remain constant, but the FREQACT display will decrease and STOP will appear as the drive status display.

The drive can be operated at a preset crawl speed by pressing the CRAWL key and either the + or - key. The drive will start and accelerate the motor to the speed set by the value stored in either SPEED1 or SPEED2 (CRAWL + = parm 161, CRAWL - = parm 162). During the crawl mode, the run speed reference, the actual speed set by the crawl speed reference and the actual motor current are displayed along with the letters CW to indicate that the drive is in crawl.

3-2.6.5 **Displaying and Changing Parameters** - The Control Panel can be used to observe and change parameter values as soon as power has been applied to the unit. When the PARAM key is pressed for the first time after power up, a default parameter will be displayed. If a parameter beyond the bounds of the parameter table is called for, the display will automatically return to the default parameter. To illustrate use of the Control Panel to change parameter values, FREQREF (parm 29) is used as an example. It can be selected by pressing the PARAM key and the appropriate + , +/- or - keys. In this example , parameter 29 is set at +20000 speed units (Figure 3-46).

Figure 3-46. Example of Parameter Selection

To change the value of parameter 29 to +19998, press the PARAM, VALUE and - key until parameter 29 decrements to +19998 .

Note: The new displayed value is stored only in the Control Panel , as the actual value of parameter 29 has not been changed in the Drive RAM. To enter the value in RAM, continue to hold the PARAM and VALUE keys and ,at the same time, press the RESET key. The value on the control panel will be read and transmitted to to the Drive where it is entered into the RAM memory. When the new value has been sucessfully entered into RAM, an asterisk will appear on the display.

3-2.6.6 **Number System Conversion** - The F3 key is used to change the number system which displays parameter values. The default system used is signed decimal ranging from -32768 to +32767. This will display the true decimal number and sign. When FREQREF (parm 29) is displayed , the default number system is in use.

By pressing the F3 key once, the parameter value will change to the Unsigned Decimal number system. For a decimal range of -32768 to +32767, the unsigned decimal system will display a number from 0 to 65535.

Pressing the F3 key a second time converts the display to a Hexidecimal value (Figure 3-47). Table 3-1 shows additional examples of number conversions.

Figure 3-47. Parameter Value Display Using Hexidecimal Number System.

Table 3-1. Display Number Conversions

Signed Decimal	Unsigned Decimal	HEX
-10000	55536	D8F0H
+00000	00000	0000H
-00001	65535	FFFFH
+00001	00001	0001H

Pressing the F3 key a third time will return the displayed value to the signed decimal number system.

3-2.6.7 **Control Panel Fault Displays** - When a fault occurs in the Bulletin 1352, a faultword corresponding to the fault will appear on the Control Panel display (Figure 3-48). A complete listing of fault codes and their possible causes is detailed in Chapter 6, Supervision and Visual Warning.

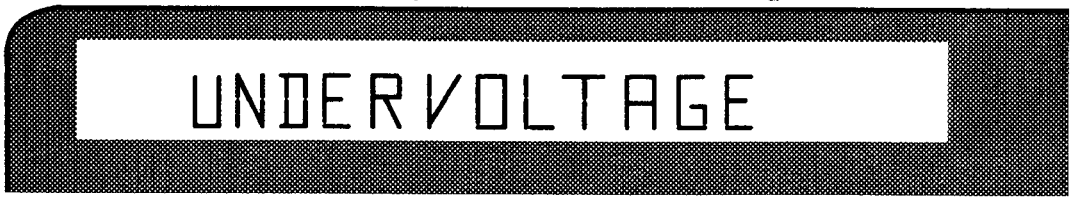

Figure 3-48. Fault Display Example

3-2.7 **Standard Software Description of Operation** - In its standard form, the Bulletin 1352 software has been configured to sequence as follows:

3-2.7.1 **START/STOP** - Since the actual inputs to the SCALAR block (Fig. 3-49) are inherently 3 - wire equivalent, the Start/Stop control is configured as a 3-wire control. When the START-1 input is connected to a digital input (Table 3-2) it will LATCH-UP, and then the SCALAR block will receive a STOP input telling it to STOP. The START input is conditioned as a oneshot, because a maintained START command would attempt to tell SCALAR to start the drive under any circumstance.

Making the SCALAR START input a oneshot prevents it from seeing continuous start commands. This is especially significant in the event of a FAULT condition, and is intended to prevent the inverter from automatically restarting when the operator depresses the RESET button after a fault.

With the oneshot in the start circuit, a start command given by a closed contact (or pushbutton) will be active for the time delay specified in DELAY0 : TIME (where time = N x 210 ms) shown in # 1803 Figure 3-49. After the time elapses, the output of AND0 will go false, clearing the start command. Whenever the start input goes false, the oneshot is cleared and reset.

The STOP circuit from the digital input DIN1 must be held closed (N.C.) to allow the inverter to run at all. If the DIN1 input is opened, the inverter will immediately cease switching and will prevent re-starting for approximately four seconds from the time the STOP input clears. This delay is not adjustable and exsists to ensure the motor flux is delayed, thus preventing IOC trips during start.

IMPORTANT: The lack of a stop input (DIN1), as with any other stop command, takes precedence over all start commands.

CAUTION: As stated above the standard software configuration is for three wire control. If the digital inputs are wired for two wire control (Eg. Jumper start DIN0 closed, and use a **run** contact to control the stop DIN1 input and change parameter # 1412 (Delay) to 450. The following operating characteristics will occur with this method.

- Closing the "RUN" contact (DIN1) will start the drive after a 4 second delay.
- Opening the "Run" contact (DIN1) will properly stop the drive.
- The start pushbutton on the local control panel will not function. (its command is being overidden by the status of DIN1.)
- If the drive is stopped via the pushbutton on the local CP1 Control Panel, it can only be restarted by the start pushbutton on CP1 or opening the "Run" contact and then reclosing after a minimum of 420 msec. This method of operation is not recommended since the 4 second delay meets with customer dissatisfaction. An alternative two wire control software scheme is available if two wire control is desired, but must be so stated on order entry.

3-2.7.2 **REVERSING** - The configuration of SEL1 : IN2 (#1812 Fig. 3-49) is the primary factor in controlling Reversing. SEL1 : IN2 controls the selection of one of two multipliers to be multiplied by the frequency reference. The frequency reference can be passed on through SEL1 without modification, or it can be multiplied by the constant "-1", which is contained in location 1581.

Since the default value for SEL1 : IN2 is 1580, the reverse function is DISABLED (the value of 1580 is "+1". To enable reversing, it will be necessary to substitute the lookup address 1581 for 1580 in parameter 1615 (SEL1:IN2).

Actual selection of reversing (if enabled) is accomplished by either :

1. Turning on a selector switch that has been connected to DIN2.
2. Toggling of the JKFlip Flop1 block (#1808 Figure 3-49) by the CP1 : REV button.

Making a selection with either of these methods will cause the output of OR2 (# 1813 Fig. 3-49) to go true. turning the selection of SEL1 to examine IN2 instead of IN1. This will control the multiplication factor to be fed to MUL0:IN2 (# 1815 Fig. 3-49), and ultimately define the "polarity" of the frequency reference.

The inverter's ability to deal with negative references is based on several constraints:

1. If the SCALAR:MINFREQ limit is greater than or equal to 0 - Non-Reversing.
2. If the SEL:IN2 lookup address is 1580 - Non Reversing
3. Inputs to MUL0:IN1 must be POSITIVE ONLY! Failure to assure this will result in double negation, and possible undesirable drive operation

Table 3-2. Digital Inputs

INPUT	CONDITION	FUNCTION
DIN0	START	(Three Wire Control Equivalent) W/ ONESHOT
DIN1	STOP	(Three Wire Control Equivalent) CLOSED = OK to RUN
DIN2	REVERSE	Maintained True, Then Reverse if Reverse Enabled
DIN3	REMOTE REF	IF TRUE, REF = ANALOG INPUT 0 (4-20 mA)
DIN4	PRESET	MOMENTARYTRUE = Run at Preset Speed in Speed1 (5Hz)
DIN5	AUTO	IF TRUE , REF = ANALOG INPUT 1 (ISOLATOR 4-20mA)
DIN6	FL26	IF TRUE , DISPLAY "FL26" and Stop in Rampstop Mode
DIN7	CP1LOCK	IF TRUE , Allows Viewing But Not Editing of Parameters

3-2.7.3 **REMOTE REFERENCE** - A Remote (4-20 mA) reference is selected by toggling JKFF0 with the CP1 : LOC/REM button, or by DIN3 being held true with a selector switch. Either of the two will select SEL2:IN2 instead of SEL2 : IN1, which is the output of the DISPLAY0 (CP1) +/- button's counter (which acts as the LOCAL MODE reference).

NOTE: For an explanation of the ANALOG ISOLATOR reference input, refer to the paragraph on AUTO MODE which follows.

3-2.7.4 **PRESET** - Momentarily activating the PRESET input (DIGITAL INPUT block Fig. 3-49) via a pushbutton or contact will activate the START2 input to SCALAR, commanding the inverter to run at PRESET SPEED defined by SPEED1 (161 TEE). This input will effectively "disable" the START 1 request to run with a LOCAL or REMOTE reference, and will stay in PRESET mode until interrupted by a STOP1 or STOP2 command. Although not used, the START3 input functions identically.

3-2.7.5 **AUTO MODE** - Selection of the AUTO MODE (DIGITAL INPUT block Fig. 3-49) results in the inverter following the analog reference value in channel 1 of the 3500 - INP isolator card (Table 3-3). This signal is scaled for 4-20mA as a default. The selection of AUTO mode does not in itself imply that the drive will follow analog input 1; it is necessary to select the general case of REMOTE references using the selector switch or CP1 REMOTE pushbutton. This function can be performed concurrently by adding a jumper to the digital inputs from DIN5 to DIN3. Thus, when selecting AUTO MODE, REMOTE MODE will also be selected, and the drive will follow analog channel 1 while DIN3 and DIN5 are both true.

Table 3-3. Analog Inputs

INPUT	FUNCTION
Analog Input 0	Terminal Block Card Remote Mode Reference Scaled for 4-20 mA
Analog Input 1	Isolator Card Auto Mode Reference Scaled for 4-20 mA

3-2.7.6 **FAULT 26** - Using an external alarm-type contact to enable this input will produce a "FL26" display on the control panel, and cause the SCALAR:STOP1 input to halt drive operation. When the contact clears (opens), the "FL 26" display will clear, and the drive will stay stopped until another START command occurs.

3-2.7.7 **CP1LOCK**- This input is used exclusively to protect the application program from unauthorized program editing. This is accomplished through the use of two parameters in memory, 1354 and 1355 T. When the values of these two parameters are equal to each other, parameter editing is allowed. When the two are set to dissimilar values, the ability to view parameters is unchanged, but the ability to use the RESET button in the PARAMETER mode is disabled. This method has been used instead of using the SPEC DISPLAY:CP1LOCK function, because this method allows viewing of the parameters but not editing. With the SPEC DISPLAY: CP1LOCK function active, viewing of the parameters is not possible.

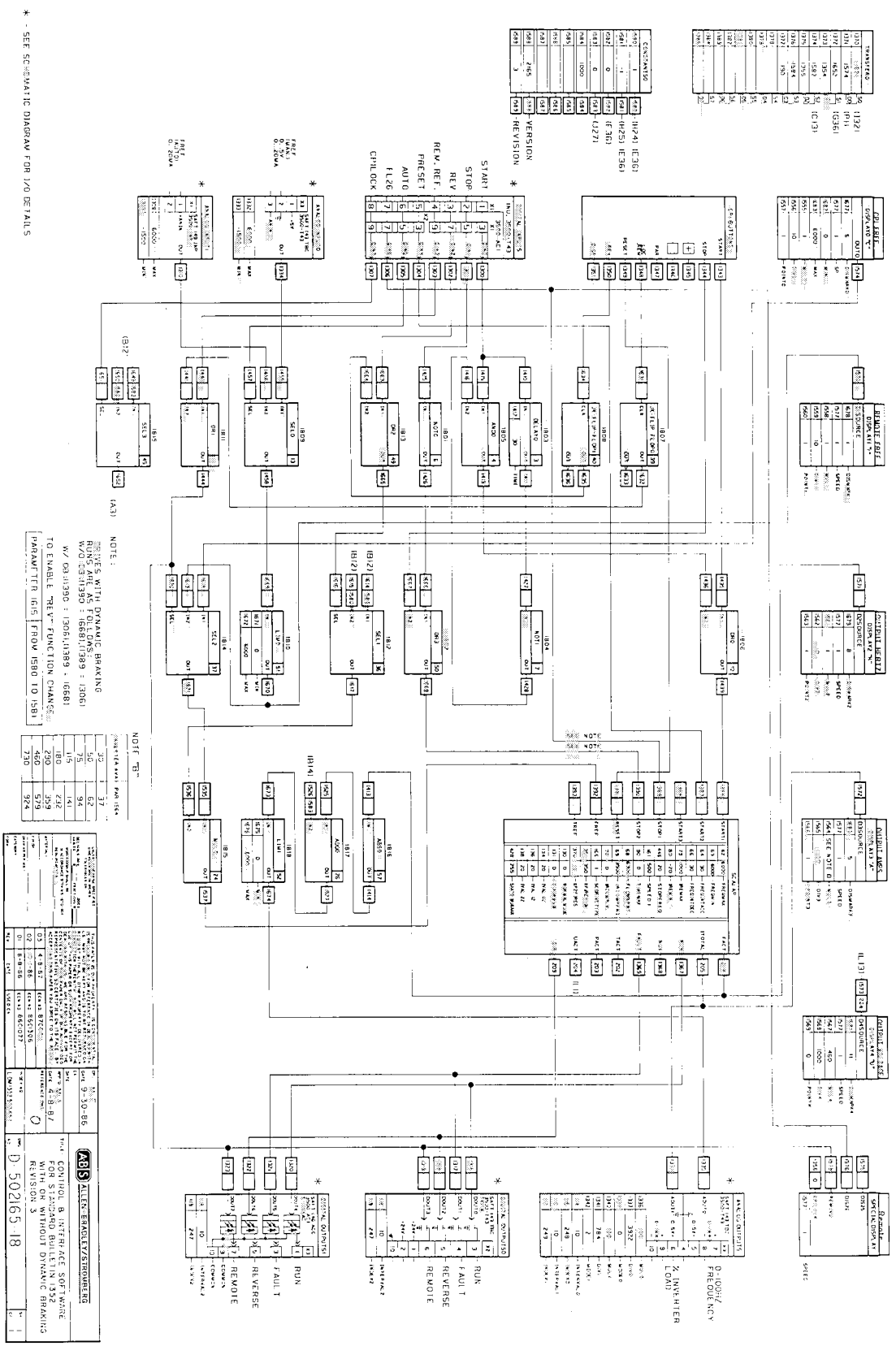

Figure 3-49. Standard Software (repeated in Section 9)

START - UP

TABLE OF CONTENTS
Chapter 4
Start - Up

SECTION		PAGE
4-1 : General Instructions		**1**
4-1.1	Safety	1
4-1.2	Preparation for Startup	1
4-1.3	Installation Inspection	2
4-1.4	Insulation Checks	4
4-2 : Start-Up Tests		**6**
4-2.1	Inspection of Supply Connections & Voltages	6
4-2.2	Simulation Tests	7
4-2.3	Test Run With Motor	7
4-2.3.1	Connecting Motor to Drive	7
4-2.3.2	Applying Power to the Drive	7
4-2.3.3	Checking Rotation Direction	7
4-2.3.4	Sound and Vibration	7
4-2.4	Test Run With Load	7
4-3 : Start-Up Adjustments		**7**
4-3.1	Adjusting Min. & Max Frequency Limits	7
4-3.2	Torque/Current Limit Control	8
4-3.2.1	Adjusting Torque Limit	9
4-3.2.2	Adjusting Torque Limit Ramp	10
4-3.3	Adjusting the I.R. Compensation	11
4-3.4	Adjusting the Field Weakening	13
4-3.5	Enable Reversing Function	14
4-3.6	Scaling Analog Input Signals	14
4-3.7	Scaling Analog Output Signals	14
4-3.8	Display Scaling	16
4-4 : Parameter Start-Up Adjustments Table		**17**
4-5 : Start-Up of Options		**17**
4-5.1	Dynamic Braking Unit Start-Up	17
4-5.1.1	Operating Current Adjustment	18
4-5.1.2	Operating Time Adjustment	18
4-5.1.3	Supply Voltage Adjustment	19

Section

4

BULLETIN 1352 START-UP

4.1 General Instructions

4-1.1 Safety -The safety precautions outlined in Section 1 must be adhered to at all times. In addition, the following must be noted before beginning any start-up adjustments or performing any maintenance on the 1352 Drive:

A. The inverter should always be treated as though it carries live voltage, until verified as voltage free by measurement.

B. The pulse amplifier A4 , the chop control card A7, the auxiliary voltage supply card A3, the power interface card A9 and the current converters U1 thru U3 are all at main circuit potential (refer to Fig. 4-4).

WARNING: When voltage is supplied to the inverter a potentially fatal voltage is present between the cards and the inverter chassis! Only qualified service personnel familiar with the Bulletin 1352 Drive should attempt the Start-Up.

C. Any measurements made on the cards must be made with the intermediate circuit **voltage free** and in the simulation mode.

D. Allow at least three minutes after opening the main disconnect for the capacitors of the D.C. Intermediate circuit to discharge. The inverter should be be checked at both the + and - connectors and at the D.C. rectifier bus bar of the line supply unit for absence of voltage.

E. A final check should be made to see if the 220V circuits are live.

4-1.2 Preparation For Start-Up - The following preparations should be made prior to beginning the start up:

A. Familiarize yourself with the start-up sequence shown in the block diagram (Figure 4-1)

B. Inspect the Installation.

C. Perform insulation checks.

D. Review the Description of Operation (Sec. 3-3.7) to ensure that the controls wires are correctly installed, and provide the intended operator control sequence.

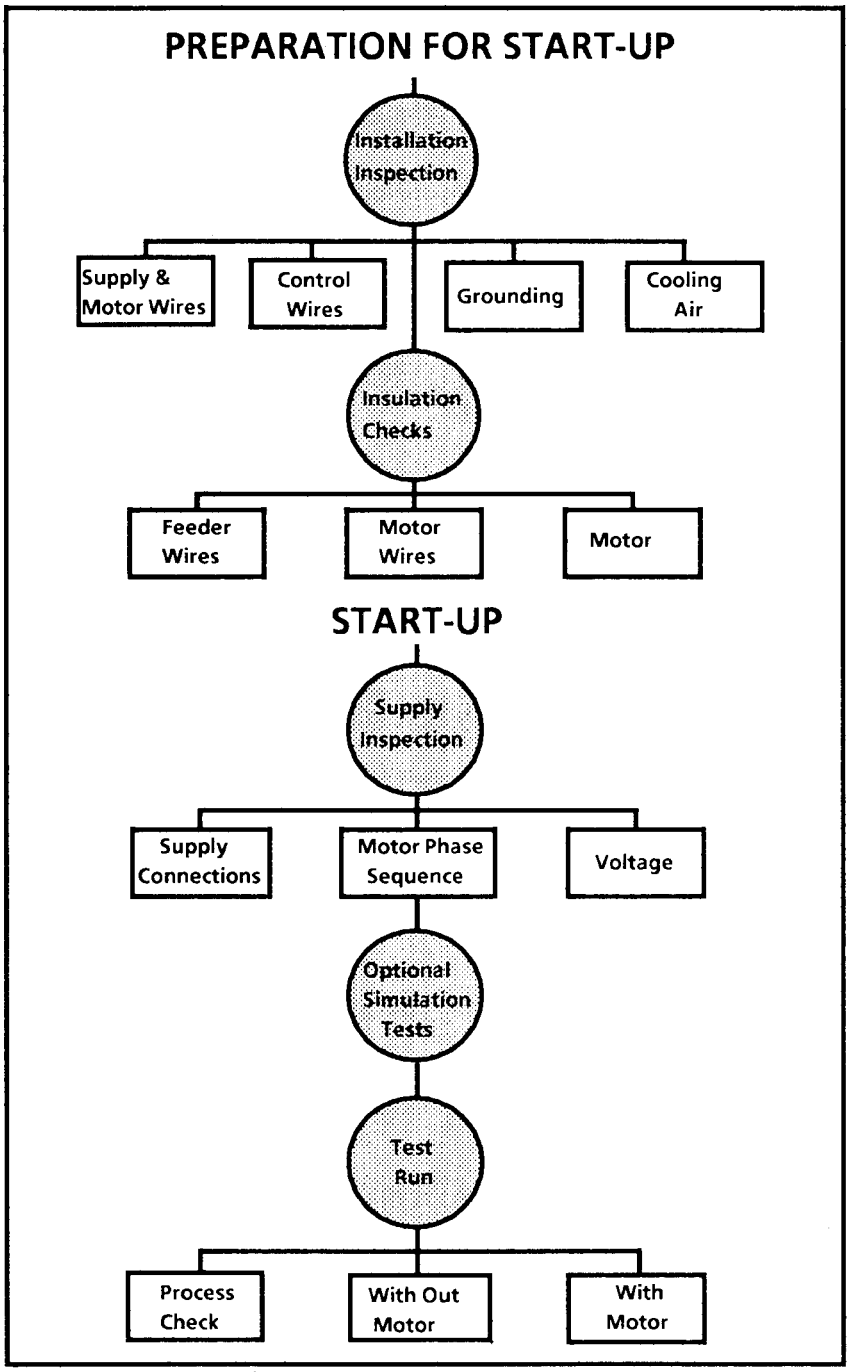

Figure 4-1. Start-Up Sequence

4-1.3 **Installation Inspection** - Before beginning any start-up procedures, check to see that the Drive is correctly mounted and wired, as detailed in Section II, Installation. Particular attention should be paid to the following:

A. That supply and output cables are the correct size and type and that supply cables are protected against overloads or short circuit by correctly sized fuses. It is recommended that the wires running from the drive to the motor be the same size as those used for the main voltage source connections to the drive. This provides protection against overheating caused by harmonic currents, and it allows bypass devices to be added at a future date.

B. That shielded cables have been used for control circuits to provide interference protection.

C. That control cables have been routed as far away as possible from power cables and that control and power cables do not have long parallel runs and are run in separate conduit.

D. That the main circuit (Figure 4-2) is properly grounded, to prevent dangerous voltages from being present during malfunctions. A star type grounding arrangement as shown in Figure 4-3 is the preferred method of grounding the circuits. The shields of the control input and output cables in Figure 4-3 are connected to the TE terminal (Interference-Free protective ground) of the Line Supply Unit.

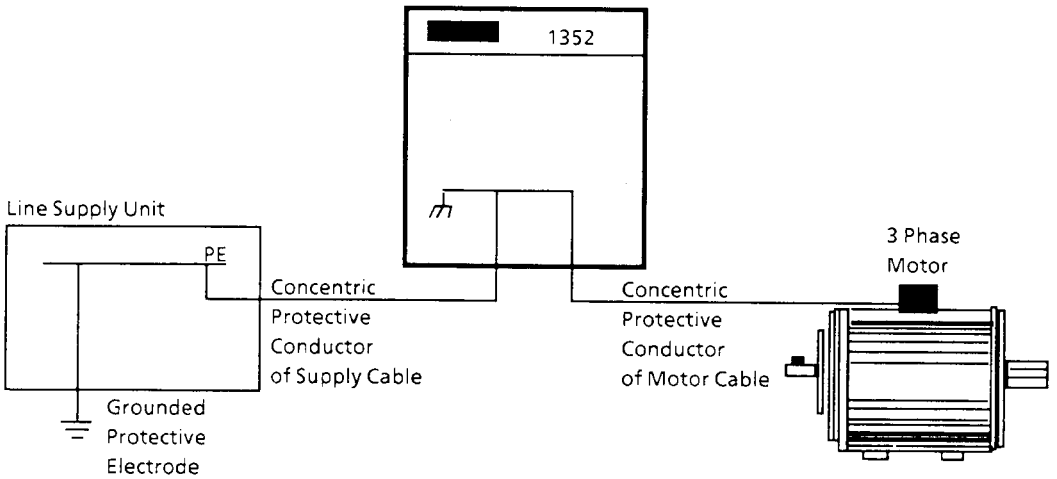

Figure 4-2. Main Circuit Grounding

E. That the cabinet has sufficient clearance to allow unobstructed air flow thru the vents. Check for correct cooling fan operation and properly conditioned air that meets the requirements laid down in Section II.

F. That all packing material, wedges or braces have been removed from inside the controller. Operate the contactors and relays manually to make certain they operate freely.

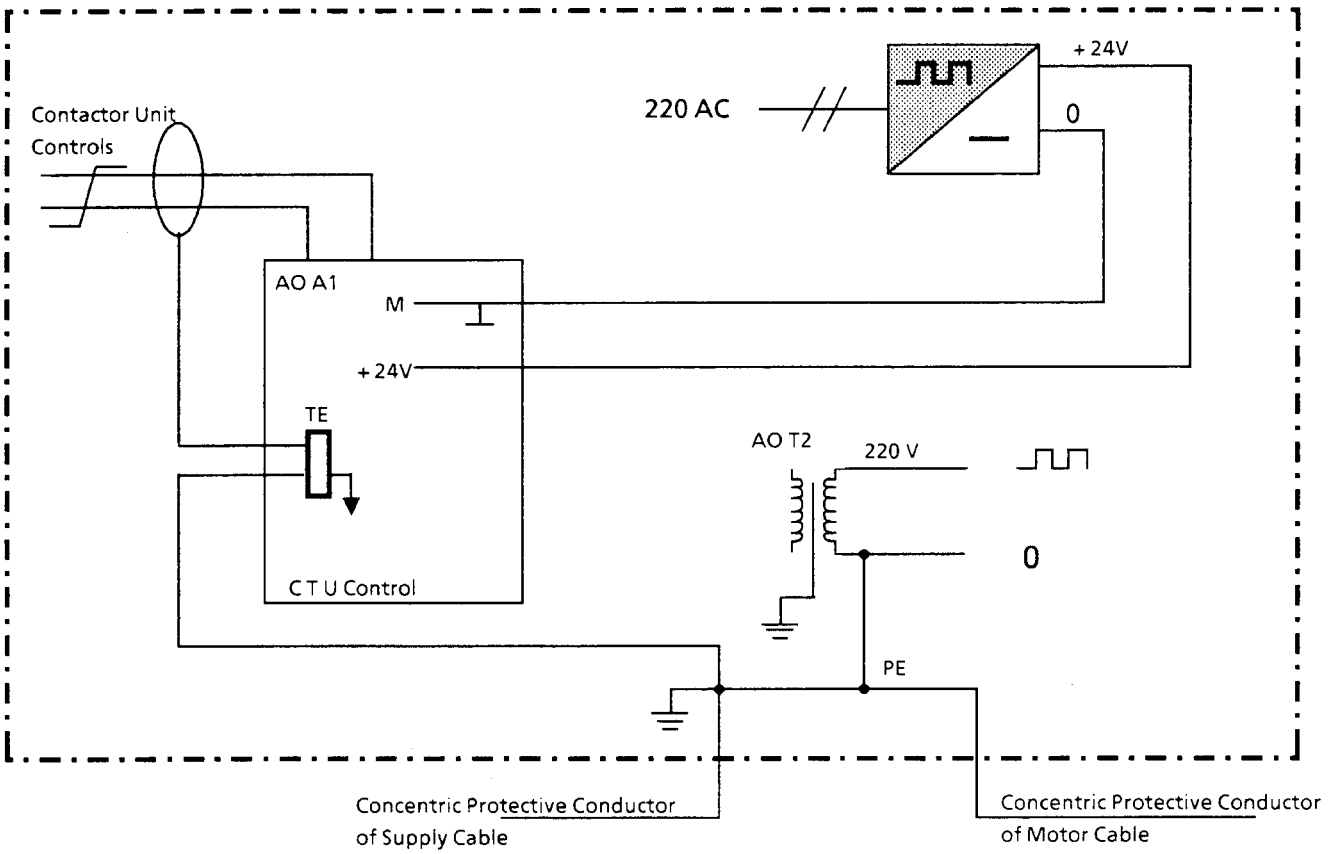

Figure 4-3. Control Circuit Grounding

4-1.4 **Insulation Checks** - Before beginning the insulation checks, the following steps must be taken:

A. Open the main disconnect switch (Figure 4-4).

WARNING: When voltage is supplied to the inverter a potentially fatal voltage is present between the cards and the chassis! Only qualified service personnel familiar with the 1352 Drive should attempt a Start-Up.

B. Remove the fuses, F1,F2 and F3 located ahead of the supply cables feeding the drive.

C. Disconnect the motor wires from the drive output U2,V2,W2.

D. Disconnect the motor wires from the motor.

Measure the insulation as follows with an instrument using a voltage at least equal to the voltage rating of the drive., however do not exceed 1000V:

A. The insulation of the supply wires between phases (1-2, 2-3, 3-1) and between each phase and the neutral conductor if present.

B. Measure the insulation of the motor wires between phases and between each phase and the ground.

C. Measure the insulation resistance of the motor wires between phases and between each phase and the motor frame.

D. Record motor name plate data in start up record (Sec. IX).

The insulation resistance must be greater than 1 Megohm in each case. Note the lowest value for each of points (a) thru (c) and record this data in the start-up record (Section IX).

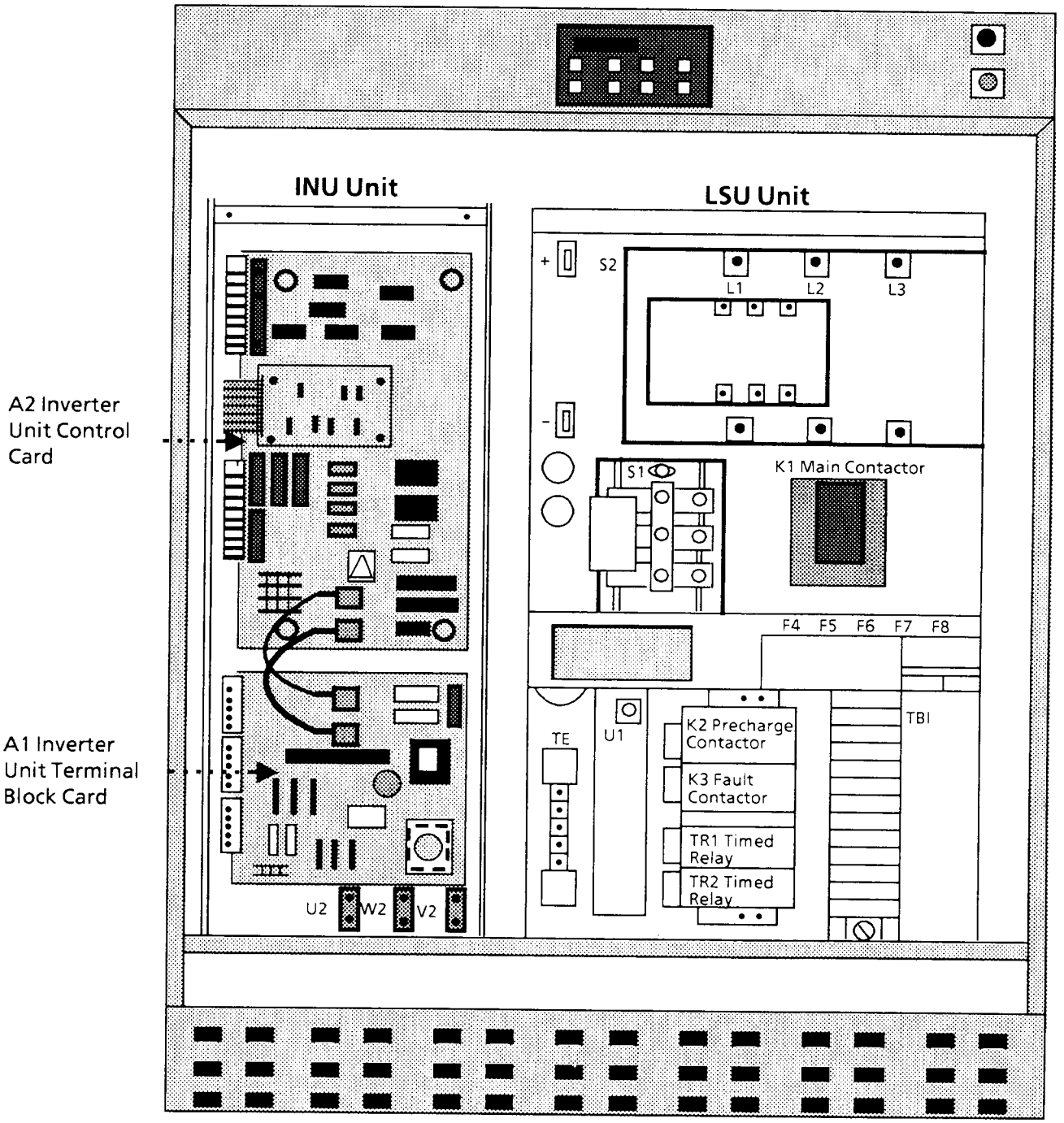

Figure 4-4. Typical Component Layout in a 30 - 115 KVA 1352 Series B Drive

4.2 Start-Up Tests

4-2.1 **Inspection of Supply Connections & Voltages** - With the main disconnect open, install the fuses F1, F2 and F3 (Figure 4-5) on the main supply side of the cables connecting to the drive.

IMPORTANT: Do not connect the motor wires U2,V2 and W2 to the output of the drive at this time.

Measure the incoming supply at the incoming supply terminals L1,L2,L3 to assure that all phases exhibit the correct voltage (nominal phase to phase voltage, ± 10%).

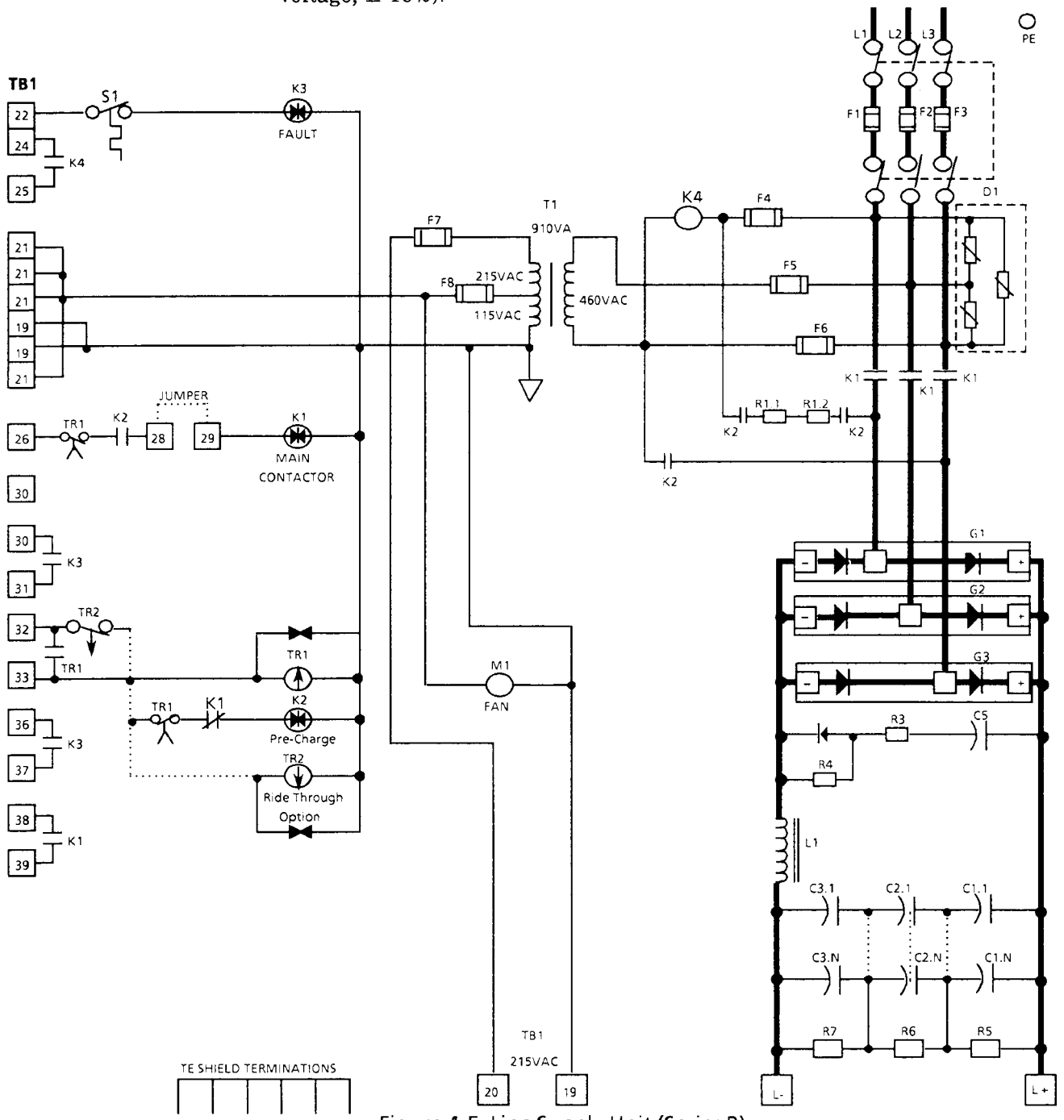

Figure 4-5. Line Supply Unit (Series B)

4-2.2 **Simulation Tests** - If there is a question on the integrity of the unit due to possible mishandling or damage, it is possible to set up a simulation circuit which will allow the drive to be tested on a section by section level. Simulation set-up and testing is covered in detail in Section VII TROUBLESHOOTING. Normally, it should not be necessary to use the simulation mode during a basic start-up.

4-2.3 **Test Run With Motor**

4-2.3.1 **Connecting the Motor to the Drive** - Disconnect the A.C. Supply Voltage to the drive by opening the main disconnect and removing the F1,F2 & F3 fuses ahead of the supply wires. Check the main circuit to make certain no voltage is present in the drive.
Observing the proper phase sequence, connect the motor wires to the drive output terminals U2,V2 and W2. Connect the motor wires to the motor, noting the phase sequence and motor connection pattern for proper voltage operation. Running the motor over rated speed could damage the bearings. Consult the motor manufacturer data for speed and lubrication requirements.

Disconnect the load from the motor by removing the drive coupling.

4-2.3.2 **Applying Power to the Drive** - Reinstall the supply fuses (F1--F3) and switch on the main disconnect.

4-2.3.3 **Checking Rotation Direction** - Run the motor briefly at minimum frequency to ensure that the motor rotates in the correct direction required by the load.

4-2.3.4 **Sound and Vibration** - Run the motor thru the entire frequency range to ensure that there are no abnormal phenomena or vibrations in the motor.

4-2.4 **Test Run With Load** - Remove power to the drive by opening the main disconnect. Reattach the mechanical coupling between the motor and load.

WARNING: To avoid injury, be certain that the machinery is prepared for start-up and that all personnel have been alerted of the start-up and cleared from the area before operating any process machinery.

Power up the drive by closing the main disconnect, and check the following parameters with the drive under load:

A. Accel Rate and Decel Rate

B. Maximum Frequency

C. Minimum Frequency

D. Torque Limit

E. Field Weakening Point

F. IR Compensation

4-3 Start Up Adjustments

4-3.1 **Adjusting Minimum and Maximum Frequency Limits** -

WARNING: Whenever exceeding the 60Hz maximum frequency limit, always make certain that the motor and the driven machine can withstand the maximum speed.

The Bulletin 1352 Digital A.C. Drive has the capability of operating from 0 to 200 Hz in either forward or reverse direction. The reverse frequency values in the drive appear as negative numbers (i.e. -6000 at 60Hz reverse). When

adjusting the minimum or maximum frequency limit values, it may be necessary to adjust as many as three parameter values. To establish a minimum frequency limit, parameters 63 TEE and 1682 TEE need to be set to the same value.

IMPORTANT: For a reversing drive, parameter 63 TEE will require a negative value.

Similarly, the maximum frequency limits at parameters 62 TEE and 1683 TEE need to be set to the same values.

When utilizing the analog input channel of the Terminal Block Card (3500-T43/SAFT143 TBC), the following parameters may also require changing. Parameter 1332 TEE and 1672 TEE need to be adjusted to the same new maximum frequency value as in Parameter 62 TEE.

If the analog signal is either 0 - 5 volt or 0 - 20 mA DC, the value of parameters 1333 TEE and 1671 TEE both should be set to "0" for the Minimum value. When the milliamp signal is offset such as in 4-20mA, the value of parameter 1333 TEE must be calculated according to the following formula:

$$\text{Max} - \left[\left[\frac{(\text{Max} - \text{Min})}{16}\right] \times 20\right]$$

IMPORTANT: Parameter 1671 should remain "0" in either of the above cases.

For a 4-20 mA signal scaled to indicate 0-60 Hz, the settings would be:

Parameter	Value	Function
1308	6000	Analog IN1 MAX
1309	-1500	Analog IN1 MIN
1332	6000	Analog IN0 MAX
1333	-1500	Analog IN0 MIN
1671	0	LIM0 MIN
1672	6000	LIM0 MAX

4-3.2 Torque/Current Limit Control

The function of the Torque/Current limit controller is to limit the active motoring and regenerating component of the motor current so that it remains between the motoring and regenerating set limits. The controller keeps the motor at the descending part of the torque curve.

There are two controllers, one for motoring and the other for regenerating conditions (Figure 4-6). The controllers are proportional plus integral (PI) type controllers in which the frequency is controlled on the basis of the torque value. The torque value is the active motor current component which is directly proportional to the torque when excitation is kept constant by means of Volts/Hertz control.

When Motoring, as the actual value of torque (the active motor current component, parameter #201) increases to its set limit (param 79TEE), the inner frequency reference integrator is bypassed and the torque controller starts to **reduce** frequency. The torque controller remains on as long as the controller output FREQSEL (232T) is lower than than the ABSFREQREF (ABS of param 226T) output of the outer frequency reference integrator. **When Regenerating**, as the active value of torque decreases to its set limit (param 80TEE) the inner frequency reference is also passed and the torqe controller starts to **increase** frequency. The controller remains on as long as the controller output FREQSEL (param 232T) is higher than ABSFREQREF (ABS of PAR # 226T).

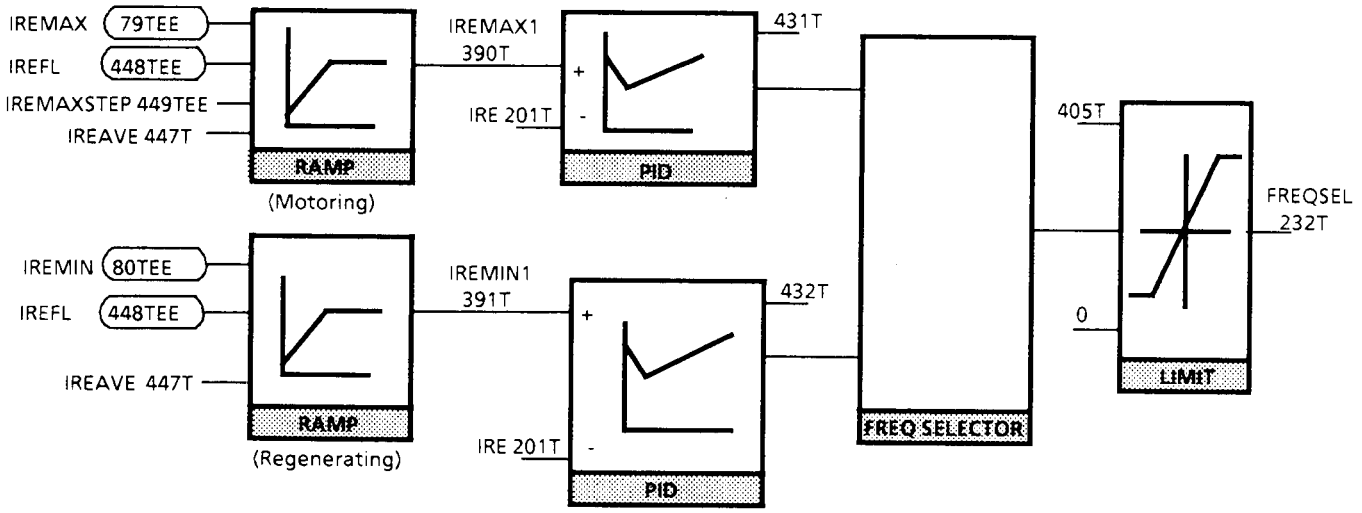

Figure 4-6. Torque Limit Controller (Refer also to Fig. 3-6)

4-3.2.1 <u>**Adjusting the Torque Limit**</u> - The active current limit (Torque Limit) of the Bulletin 1352 is entered and recognized in terms of 0.1% of inverter rated active current. This value of current is directly proportional to the actual torque of the motor.

The total current, which includes active current and magnetizing currents, is similar to the reading a clamp - on type meter would yield, if used to check the motor load current.

When setting the IREMAX (79TEE) value it should be determined whether the torque value or the total value should be limited. To set the torque limiting value (expressed in 0.1% of inverter rated amps), find the rated value of current either on the drive nameplate, or in Table 2-1 of this manual. Use the following equation to determine the value to be entered in Parameter 79TEE.

$$\text{A)} \quad \frac{\text{Desired Value of Active Current Limit}}{\text{Rated Current of Drive} \times 0.72} \times 1000$$

(0.72) is a scaling factor for the drive.

This formula renders a value which should be between 0000 and 1200. For regenerative mode setting of parameter 80TEE (IREMIN), simply enter a negative value.

To set a value for controlling the total current to the motor, additional consideration must be allowed for the reactive current requirements of the motor (proportional to the power factor of the motor). The formula:

B) Motor FLA x Rated PF = Rated Active Current
is used to establish the "desired active current limit value " in Formula "A".

The following example shows values for a Bulletin 1352, 115KVA being applied to a constant torque application requiring 125% torque for a 75 HP motor with a nameplate full load amps of 86.6 amps and rated power factor of 0.85.

The following example represents a variable torque application using a 50 KVA 1352 Drive and a 50 HP motor with a rated FLA of 62.5 AMPS and power factor rating of 0.80.

FLA X PF X Torque Requirement

86.6 X 0.85 X 125% = 92.0 AMPS (DESIRED ACTIVE CURRENT VALUE)

EXAMPLE 1

$$\frac{92}{144 \times 0.72} \times 1000 = 887 = \text{(Value for PARAM 79TEE)}$$

62.5 X 0.80 X 100% = 50.0 AMPS (DESIRED ACTIVE CURRENT VALUE)

EXAMPLE 2

$$\frac{50}{63 \times 0.72} \times 1000 = 1102 = \text{(Value for PARAM 79TEE)}$$

IMPORTANT: To save these new values, the EEPROM Write Enable (PARAM 8) must be set to "1" for at least 2 minutes after the changes are entered.

4-3.3.2 **Adjusting Torque Limit Ramp** - In some special applications, it may be necessary to modify the speed at which the drive will respond to a step function load change (For example : a reciprocating pump application). Figure 4-7 shows the drive response to a step load change, while Figure 4-8 is a function block description of how the Torque Limit Ramp operates.

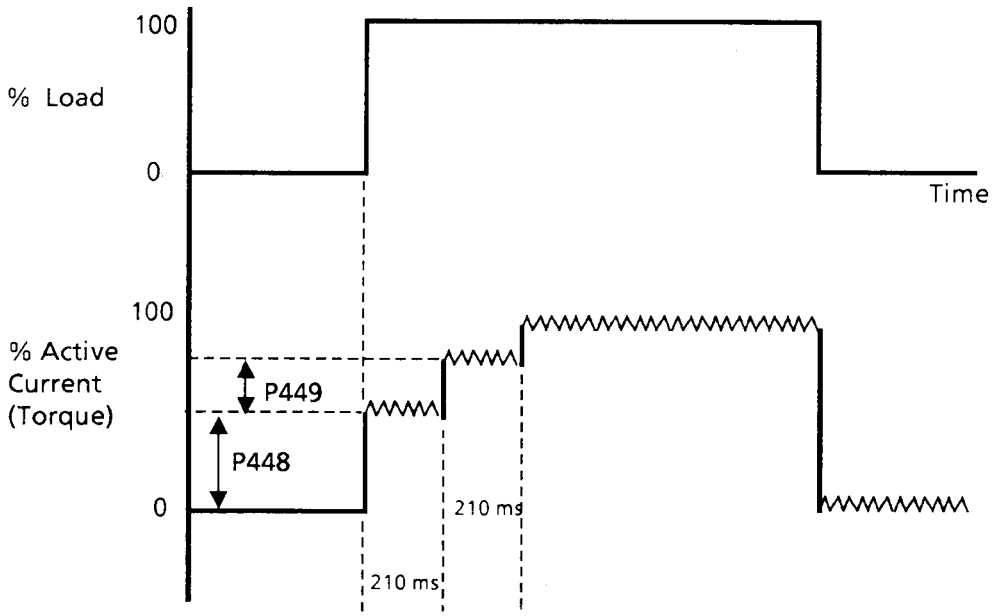

Figure 4-7. Drive Response to Step Load Change

Since IREAVE (447T) is an 18 ms average of the active current output, there is some shoot thru of the IREMAX 1 (390T) Limit. If the desired IREMAX (79TEE) Limit is very close to or above the inverter rating (Value 1388 with 1.0 PF Motor), nuisance IOC trips may occur if either IREFL (448TEE) or IREMAXSTEP (449TEE) are too large. The critical values are dependent on the impedance of the motor and cabling running to it. The default values of 300 and 200 respectively are very conservative.

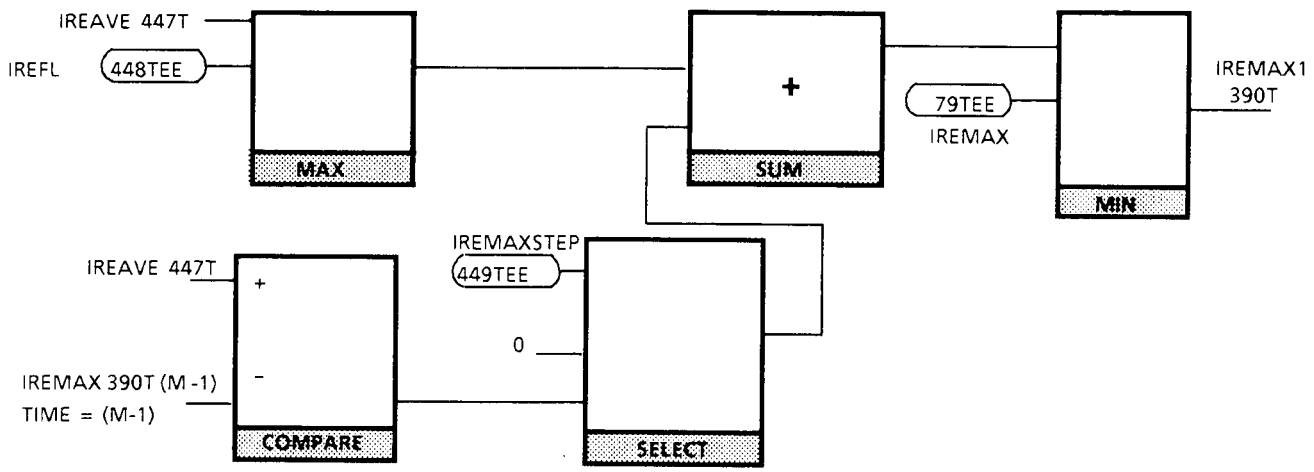

Figure 4-8. Torque Limit Ramp (Refer also to Fig. 3-6)

4-3.3 **Adjusting the I.R. Compensation** - Utilizing and adjusting the basic I.R. Compensation of the Bulletin 1352 is accomplished through setting of three parameter values. 70 TEE (I.R. Compensation Level) adjusts the amount of voltage boost added to the linear Volts/Hz value at low frequencies. 69TEE (I.R. Compensation Point) determines the frequency point at which the I.R. compensation is eliminated and the drive output resumes the normal Volts/Hz relationship. 90TEE (I.R. Comp Time) adjusts the maximum time IR compensation is allowed to remain active. The drive will shut down and report "Motor Stalled" (FL20) on the control panel if the limit is exceeded. This time limit can be defeated by setting 90TEE to zero. Figure 4-9

CAUTION: It is recommended that the I.R. Comp time limit not be deactivated, as operating a motor with I.R. Comp. creates additional losses. A motor operating with no I.R. Comp. limit could be subject to overheating.

represents the basic I.R. Compensation (mode 1) function of the Bulletin 1352. The values shown in Figure 4-9 are applicable for many situations. If Boosting (Param 70 TEE) has too high a value, it could result in an overcurrent trip on start or stalling of the the output frequency at 0 . . 6Hz due to the torque limiting function.

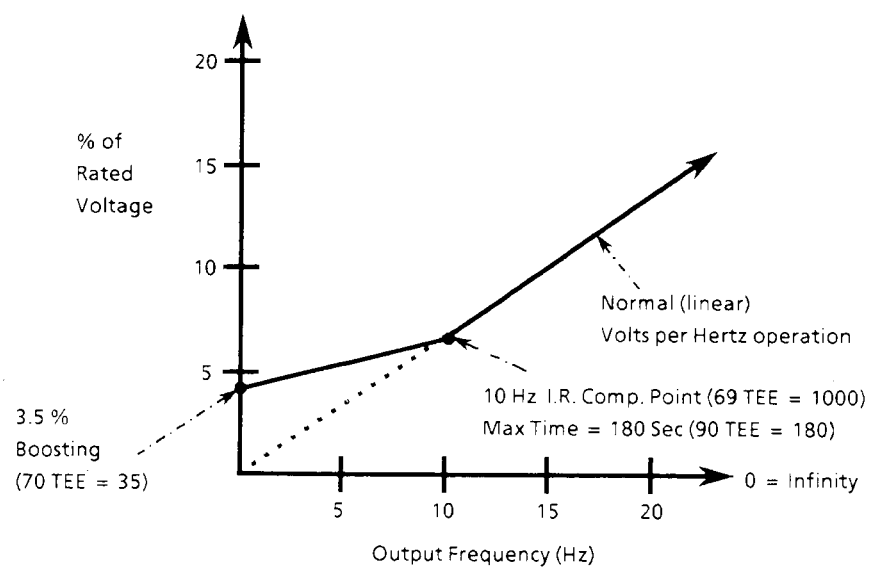

Figure 4-9. Basic I.R. Compensation

For some high torque loads it is necessary to use a special mode of IR Comp (Mode 2) In addition to generating the additional voltage (as in Mode 1) this mode provides :

1. An overriding total current limit control (85 TEE) vs. the normal active current limit control (79 TEE, Torque Control) is used.
2. Additional control of the Frequency Reference Accel rate. It provides a slower rate of frequency rise "especially close to the slip frequency".

For parameters 70TEE, 69TEE and 90TEE the set-up for Mode 2 is the same as Mode 1 (Fig. 4-10).. The drive default values will handle the other parameters, but if fine tuning is desired, the possible adjustments include:

Parameter	Default Value	Action
435	150	Set to rated slip frequency. Scaling 0.01Hz
437	500	Frequency below which torque limiter is not turned on; instead total current is controlled per param #85.
85	800	Total Current Limit in 0.1% of inverter rating (800 = 80%)
438	1500	Frequency above which the normal accel rate is used (Param 64)
436	600	Accel rate used when the frequency is below the value in parameter #435 + 1. Scaling : Seconds per 100Hz.

For faster acceleration adjust Parameter #438 (Down) and /or #436 (Up).

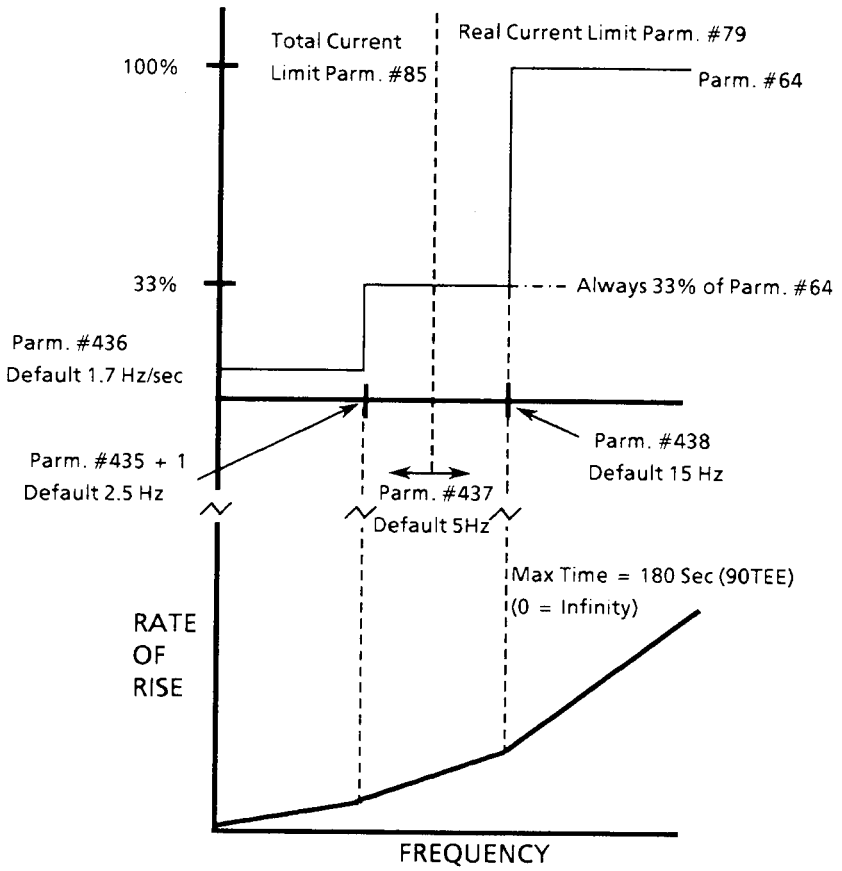

Figure 4-10. I.R. Compensation for High Torque Loads

4-3.4 **Adjusting the Field Weakening** - The Field Weakening Point (68 TEE) and Field Weakening Level (67 TEE) of the Bulletin 1352, are used to determine the frequency point and voltage level where the output of the drive is maintained at a constant voltage and the frequency is allowed to rise if desired. The maximum voltage that can be reached is 460 volts A.C.
By adjusting the value of parameter 67TEE, a percentage of this maximum rated value can be set if needed as determined by the application and motor electrical characteristics.
The Field Weakening Point (68TEE) determines the frequency point at which the voltage value of parameter 67TEE is reached and maintains that voltage whenever operating the drive at frequencies greater than the value of parameter 68TEE.
Figure 4-11 shows a typical output voltage level as the drive is operated in the field weakening range.

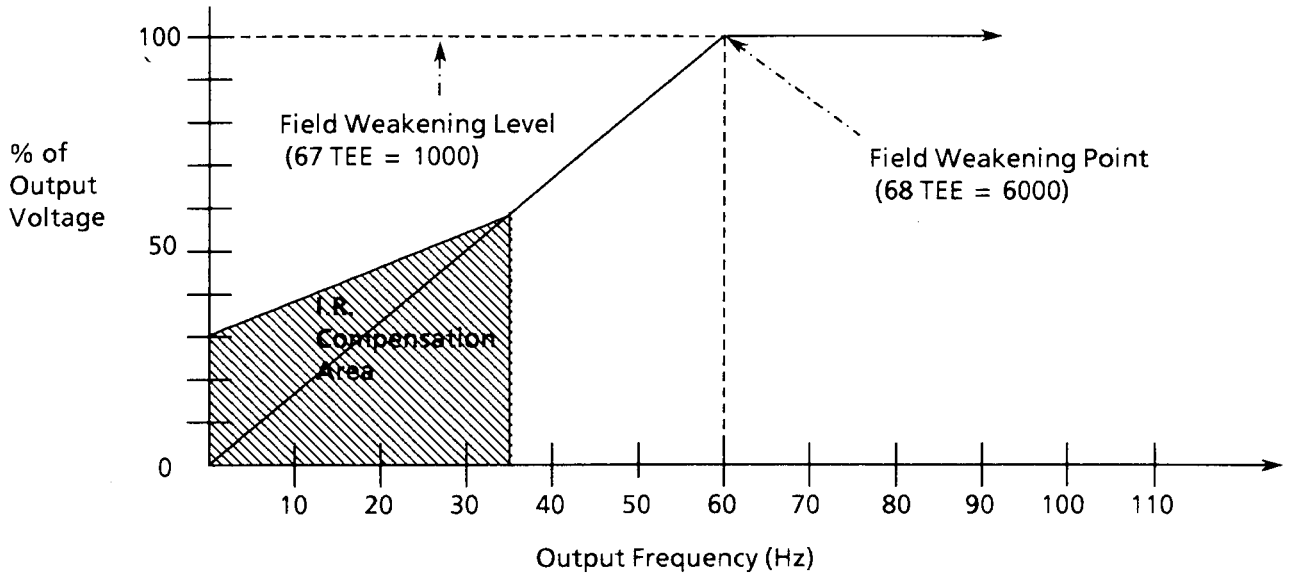

Figure 4-11. Typical Output Level in the Field Weakening Range.

4-3.5 **Enable Reversing Function** - The standard control software program has a provision for electronic motor reversing. To enable or disable the reversing function it is only necessary to change the value of parameter 1615 as detailed in Table 4-1.

Table 4-1. Motor Reversing Settings

PARAMETER	VALUE	OPERATION
1615	1580	Reversing Inhibited
1615	1581	Reversing Enabled

Setting the minimum frequency limits to "0" will additionally assure that the reverse function is inhibited.

4-3.6 **Scaling Analog Input Signals** - See Section 4-3.1 adjusting MIN/MAX speeds.

4-3.7 **Scaling Analog Output Signals** - The input to the D/A Converter (An 8 bit converter) is limited to Digital values in the range 0 . . 255. To accomplish this, the parameter value being used as an output must first be scaled using the analog output block.

The Analog Output Block contains Multiplier (Mul__) and Divider (DIV__) parameters for each of the Analog outputs as well as a mode selector.

	MUL	DIV	MODE
Analog 0	1336	1337	1338
Analog 1	1340	1341	1342

These parameters are used in the following manner:

Mode = 0 For scaling of positive values (0 . . .255)

= 1 For scaling of signed values (-128 . . . 127)

= 2 For scaling of absolute values (-255 . . .255)

Note: Mode 0 provides twice the resolution of mode 1 or 2.

Multiplier - Typically set to a value of 100

Divider - [(Max - Min) x Mul] /255.

Example 1 : Assume Frequency Output (Param 208) has a possible range of -10000 . . . 10000 (Equating to ± 100 Hz). The mode should be set to 1 for a center scale meter or 2 for a meter to display magnitude but not direction. With a MUL of 100 the DIV would be 7843.

Example 2 : Assume that the Frequency Output (as shown in the standard software) has an operating range of 20 . . 60Hz. The output will now be rescaled to take advantage of the increased resolution this reduced operating range allows.

First an Absolute Block (ABS 0) has been used to display only the the magnitude of the speed, not it's direction.

Second, the 20Hz output offset (ADD0) will be incorporated by setting the value of parameter 1583 (A Constant) to -2000 (-1 x MINFREQ).

Third, the Limit Block is adjusted to reflect the offset

MIN Param # 1675 = 0

MAX Param #1676 = 4000

Note: Only the MAX setting was adjusted, this yields a range value of (MAX-MIN).

Now with a meter scaled 20-60Hz, the Analog Output Block should be scaled as follows:

MODE = 0

MUL = 100

DIV = 1569

This provides an output resolution of .157 Hz / Bit vs. .392 Hz/Bit if a 0-100 Hz meter were used.

Example 3 % Inverter Load (Param 205)

This parameter (#205) has a range of -1,000 . . . 1,000 (corresponding to ± 100% inverter rating). As in example 1, the mode can be set to 1 or 2. The most typical scaling parameters used would be:

Mode 2

Mul 100

Div 784

If an output reflecting amps is desired., two additional pieces of data are required to properly calculate the DIV parameter:

MS - Meter full scale amps

IR - Inverter Rating in Amps (See Table 4-2).

DIV = [MS/IR x 100,000] /255 (For a 155 KVA Inverter and a 250A scale meter DIV = 681).

Table 4-2. Bulletin 1352 Drive Ratings

Drive Type	Fuse/Amp	Rated Current Amps	Catalog No.
30 KVA 460 Volts	70 Amp, 700 Volt	38	1352 - HABN
50 KVA 460 Volts	70 Amp, 700 Volt	63	1352 - KABN
75 KVA 460 Volts	100 Amp, 700 Volt	94	1352 - MABN
115 KVA 460 Volts	150 Amp 700 Volt	144	1352 - PABN
180 KVA 460 Volts	250 Amp 500 Volt	232	1352 - RABN
290 KVA 460 Volts	400 Amp 500 Volt	360	1352 - TABN
460 KVA 460 Volts	700 Amp 500 Volt	580	1352 - VABN
730 KVA 460 Volts	900 Amp 700 Volt	926	1352 - YABN

4-3.8 **Display Scaling** - The five standard CP-1 control panel displays can be rescaled to read in different units of measure if desired. Additionally, the DISPLAYMARK has 15 different characters available for assignment and the decimal point can be positioned up to 3 places to the left.

The following formula is used to provide an example of rescaling the frequency reference or actual frequency to display a corresponding motor RPM:

$$\frac{\text{Rated (or Synchronous) Speed of the Motor}}{\text{Rated Frequency of the Motor}} = \text{Value to Enter in the "MUL" Location of the Display Block}$$

A "100" should be entered in the "DIV" location of the same display.

To complete the scaling of that display, set the "POINT" value to "0" so that there is no decimal point visible for that display.

IMPORTANT: This is only an approximate display and the actual motor speed may differ by as much as 3%, depending on the slip of the motor.

If it is desired to rescale the current display to read in actual amps, the following steps are required to calculate and set up the display:

1. Program the "SOURCE" location to use the total current signal of the scalar actual value Param "205". (I.E. Param 1572 = 205).
2. Determine the rated current of the drive, either from the nameplate on the drive or from Table 2-1 in this Manual.
3. Enter the amperes value in the "MUL" location of the desired display block.
4. Enter "100" in the "DIV" location.
5. Enter a "1" in the "POINT" location (The display will now read amps to tenths).

If new display characters are desired after rescaling the display, enter a number corresponding to one of the available characters in the "DISMARK" location of the display block. The available characters are:

CHARACTER	NUMBER	CHARACTER	NUMBER
small L	0	F	7
r	1	H	8
o	2	L	9
c	3	P	10
d	4	u	11
A	5	b	13
C	6	h	14

IMPORTANT: To retain these new values, the EEPROM write enable (PARAM 8) must be set to "1" for at least 2 minutes after changes are entered.

4-4 Parameter Start-Up Adjustments Table

The parameters which are accessible and may require adjustment during the start-up procedure are covered in Table 4-3.

Table 4-3. Adjustable Parameters for Bul. 1352 software Version 2.02

PARM. NO.	TYPE	MIN.	MAX.	FUNCTION
062	TEE	-20000	20000	Maximum Frequency reference limit in .01Hz
063	TEE	-20000	20000	Minimum Frequency reference limit in .01HZ
064	TEE	0	3600	Frequency reference accel time (Sec. / 100 Hz)
066	TEE	0	3600	Frequency reference decel time.
067	TEE	0	100	Maximum output voltage in percent of rated
068	TEE	0	20000	Field Weakening Point in .01Hz.
069	TEE	0	3500	The point where IR compensation ends in .01Hz
070	TEE	0	300	IR Compensation Level in .1 percent of rated voltage.
079	TEE	50	2000	Motoring Torque Limit in .1 % of max motor torque.
080	TEE	-1	-2000	Regenerative Torque Limit in .1%
082	TEE	0	2000	Minimum operating frequency stall protection in .01Hz
083	TEE	0	60	Stall Protection operating time in seconds
084	TEE	0	32000	Slip Compensation scaling.
085	TEE	0	2000	Total Current Limit in low frequency IR compensation (Figured in .1% of the inverter rated current)
090	TEE	0	180	Maximum time (in seconds) that IR Comp is active after the start.
161	TEE	-20000	20000	Frequency (in .01 Hz) that command 24T sends inverter to on start-up.
162	TEE	-20000	20000	Frequency (in .01Hz) that command 25T sends inverter to on start-up.

4.5 Start-Up of Options

4-5.1

Dynamic Braking Unit Set-Up - If the Bulletin 1352 is equipped with an optional Dynamic Braking Unit,the incoming supply voltage and the Bulletin 810 time delay relay used on this unit may need initial adjustment. Both the tripping current and the time delay are adjustable on the Bulletin 810.

Current through the Bulletin 810 operating coil imparts an electromagnetic force on the moveable core. The vertical position of the core in the coil is adjustable, thereby providing an adjustable trip point. When the coil current increases to the trip point, the core rises to operate the contact mechanism. Time delay is provided by a silicone fluid dashpot mounted below the core and coil assembly. An adjustable valve in the dashpot piston provides for time

delay adjustment. The electromagnetic force caused by normal continuous current through the operating coil is not great enough to lift the core and piston. The relay remains inoperative. When the current through the operating coil increases beyond the trip point, the resultant electromagnetic force causes the core and piston to rise. Upward motion is dampened through the use of the silicone fluid dashpot. The core rises slowly until the piston reaches an increased diameter in the dashpot where it trips the quick acting contact.

Standard models of the Bulletin 810 are automatically reset when the current through the coil is interrupted or decreases to approximately 20% of the tripping current. The core is designed to drop quickly, returning the contacts to their normal position. A check valve allows the piston to bypass the fluid in its return to the bottom of the dashpot.

IMPORTANT: For additional detail on operation of the Dynamic Braking Unit, see Section 3-2.4.10.4. Additional Installation information is found in Section 2.

4-5.1.1 **Operating Current Adjustment**. - The minimum operating current is adjusted by changing the vertical position of the core within the operating coil. Calibration lines on the core correspond to current values stamped on the nameplate. After the core and dashpot assembly is removed, the core is turned up or down on the piston's threaded stem until the line corresponding to the desired operating current is in line with the top edge of the dashpot (Fig. 4-12). The maximum continous current rating of the coil appears on the relay nameplate. The current at which the relay is set to trip should not exceed this value except when an additional device protects the coil against sustained overcurrent.

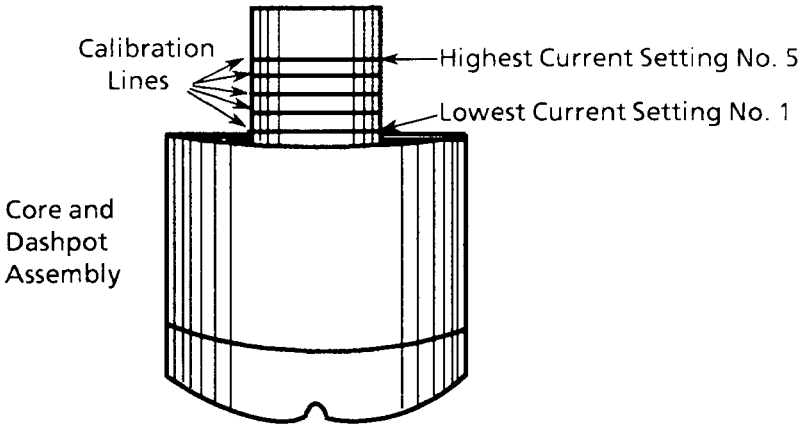

Figure 4-12. Bulletin 810 Relay Current Adjustment

4-5.1.2 **Operating Time Adjustment** - Unless ordered with a specified time delay setting, the relays are set for mimimum time delay when shipped. To increase the time delay, remove the piston from the dashpot and decrease the opening of the adjustment valve (Fig. 4-13) by rotating its cover counterclockwise. Time settings should be verified by electrical tests after the adjustment has been made.

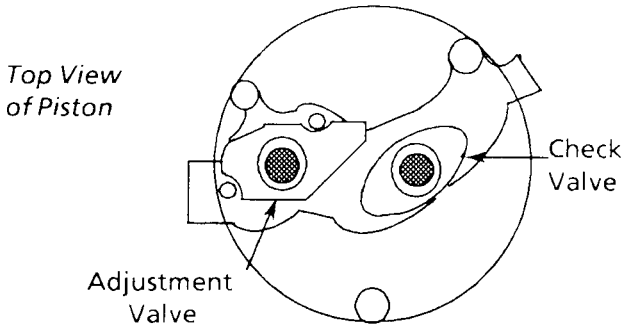

Figure 4-13. Bulletin 810 Relay Operating Time Adjustment

If additional information on the Bulletin 810 Relay is required, refer to publication 810 - 5.0.

4-5.1.3 **Supply Voltage Adjustment** - The supply voltage selector located on the Dynamic Braking Unit Chopper Control Card must be set to the correct voltage rating before operating the Dynamic Braking Unit. The selector jumper (S1, Figure 4-14) should be moved to the location (460V, 575V etc.) corresponding to the supply voltage rating of the drive. Verify the supply voltage rating by consulting the drive nameplate located near the supply connectors inside the cabinet.

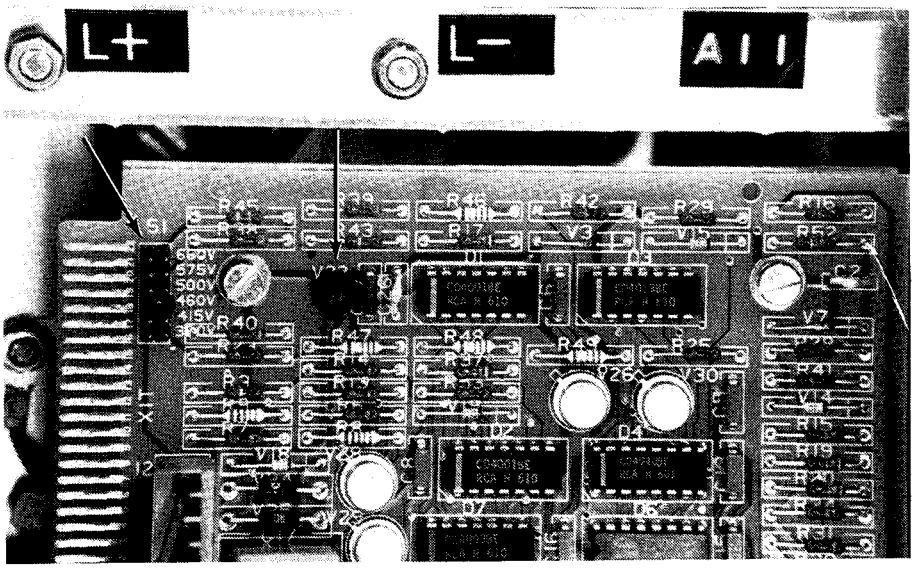

Figure 4-14. Chopper Control Card Selector S1

WARNING: The red V22 LED located on the Chopper Control Card (Fig. 4-12) which indicates when the Bus is charged and the Chopper Control Card has its operating voltages must not be considered a safety indicator for servicing the dynamic braking system. The LED does not accurately indicate when all voltages have been removed from the circuit. Only a DC voltmeter should be used to test for the absence of voltages before servicing any part of the drive or dynamic braking system.

PREVENTATIVE MAINTENANCE

TABLE OF CONTENTS
Chapter 5
Preventative Maintenance

SECTION		PAGE
5-1 : Preventative Maintenance of Drive Equipment		**1**
5-1.1	Periodic Inspection	1
5-1.2	Contamination	1
5-1.3	Operating Mechanisms	1
5-1.4	Contacts	1
5-1.5	Terminals	2
5-1.6	Arc Hoods	2
5-1.7	Coils	2
5-1.8	Pilot Lights	2
5-1.9	Solid State Devices	2
5-1.10	Static Sensitive Devices	2
5-1.11	Overload Maintenance After a Fault Condition	2
5-1.12	Final Check Out	2
5-1.13	"Keep Good Maintenance Records"	2

Chapter

5

BULLETIN 1352 PREVENTATIVE MAINTENANCE

5-1 Preventative Maintenance of Drive Equipment

WARNING: Servicing energized industrial control equipment can be hazardous. Severe injury or death can result from electrical shock, burn, or unintended actuation of controlled equipment. Recommended practice is to disconnect and lock out control equipment from power sources, and allow stored energy in capacitors to dissipate, if present. If it is necessary to work in the vicinity of energized equipment, the saftey related work practices of NFPA 70E, Electrical Safety Requirements for Employee Workplaces, must be followed.

5-1.1 **Periodic Inspection** - Industrial control equipment should be inspected periodically. Inspection intervals should be based on environmental and operating conditions, and adjusted as indicated by experience. An initial inspection within 3 to 4 months after installation is suggested. Applicable parts of the following guidelines should be used:

5-1.2 **Contamination** - If inspection reveals that dust, dirt, moisture or other contamination has reached the control equipment, the cause must be eliminated. This could indicate an incorrect or ineffective enclosure, unsealed enclosure openings (conduit or other) or incorrect operating procedures. Dirty, wet or contaminated parts must be replaced unless they can be cleaned effectively by vacuuming or wiping.

5-1.3 **Operating Mechanisms** - Check for proper functioning and freedom from sticking or binding. Replace any broken, deformed or badly worn parts or assemblies according to individual product renewal parts lists. Check for and securely re-tighten any loose fasteners. Lubricate if specified in individual product instructions.

IMPORTANT: Allen-Bradley magnetic starters, contactors and relays are designed to operate without lubrication-- do not lubricate these devices since oil or grease on the pole face (mating surfaces) of the operating magnet may cause the device to stick in the "ON" mode. Some parts of other devices are factory lubricated -- if lubrication during use or maintenance of these devices is needed, it will be specified in their individual instructions. If in doubt, consult the nearest Allen-Bradley sales office for information.

5-1.4 **Contacts** - Check contacts for excessive wear and dirt accumulations. Contacts are not harmed by discoloration and slight pitting. Contacts should never be filed, as dressing only shortens contact life. Contact spray cleaners should not be used as their residues on magnet pole faces or in operating mechanisms may cause sticking, and on contacts can interfere with electrical continuity. Contacts should only be replaced after silver has become badly worn. Always replace contacts in complete sets to avoid misalignment and uneven contact pressure.

5-1.5 **Terminals** - Loose connections can cause overheating that can lead to equipment malfunction or failure. Check the tightness of all terminals and bus bar connections and securely tighten any loose connections. Replace any parts or wiring damaged by overheating.

5-1.6 **Arc Hoods** - Check for cracks, breaks or deep erosion. Arc hoods and arc chutes should be repaired or replaced if damaged or deeply eroded.

5-1.7 **Coils** - If a coil exhibits evidence of overheating (cracked, melted or burned insulation), it must be replaced. In that event, check for and correct overvoltage or undervoltage conditions, which can cause coil failure. Be sure to clean any residues of melted coil insulation from other parts of the device or replace such parts.

5-1.8 **Pilot Lights** - Replace any burned out lamps or damaged lenses.

5-1.9 **Solid State Devices** - Solid state devices require little more than a periodic visual inspection. Printed circuit boards should be inspected to determine whether all ribbon cables are properly seated in their connectors. Board locking tabs should also be in place. Necessary replacements should be made only at the PC board or plug-in component level. Solvents should not be used on printed circuit boards. Where blowers are used, air filters if supplied should be cleaned or changed periodically depending on the specific environmental conditions encountered. For additional information see NEMA Standards Publication No. ICS 1.1-1984 entitled: "Safety Guidelines for the Application, Installation and Maintenance of Solid State Control"

CAUTION: Use of other than factory recommended test equipment for solid state controls may result in damage to the control or test equipment or unintended actuation of the controlled equipment.

5-1.10 **Static Sensitive Items** - While performing maintenance on the 1352 drive, special precautions must be observed in handling or touching certain static sensitive components in the cabinet. All circuit cards and SCR's in the drive can be damaged by Electro-Static Discharge. If personnel will make contact with an ESD sensitive component during maintenance, they must be grounded. Grounding should be accomplished with a wrist strap which is connected to an approved ground.

5-1.11 **Overload Maintenance After a Fault Condition** - See NEMA Standards Publication No. ICS 2.2 entitled: Maintenance of Motor controllers after a fault condition (also published as NEMA Standards Publication No. ICS 2, Part ICS 2-302).

5-1.12 **Final Check Out** - After maintenance or repair of industrial controls, always test the control system for proper functioning under controlled conditions that avoid hazards in the event of a control malfunction.

5-1.13 **"Keep Good Maintenance Records"** - This rule will be most helpful in locating possible intermittent problems by pointing to a particular area of recurring trouble within the overall system. Further, good maintenance records will help reduce major costly shutdowns by demanding the use of proper test equipment and an appropriate inventory of spare parts.For additional information See NFPA 70B, RECOMMENDED PRACTICE FOR ELECTRICAL EQUIPMENT MAINTENANCE, published by the National Fire Protection Association.

SUPERVISION and VISUAL WARNING

TABLE OF CONTENTS
Chapter 6
Supervision & Visual Warning

SECTION		PAGE
6-1 : Diagnostic Monitoring		**1**
6-2 : Fault Codes		**1**
6-3 : Diagnostic Messages		**2**
6-3.1	Chop Undervolt (GTO) FL 01	2
6-3.2	Chop Overvolt (GTO) FL 02	2
6-3.3	Auxiliary Undervoltage FL 03	2
6-3.4	Overtemperature FL 04	2
6-3.5	Overcurrent FL 05	3
6-3.6	D.C. Overvoltage FL 06	3
6-3.7	D.C. Undervoltage FL 07	3
6-3.8	V11-U1 thru V16 - W2 Fault FL 09 -14	3
6-3.9	Short Circuit (GTO) FL 15	3
6-3.10	Tach Loss FL 18	3
6-3.11	Measurement Fault FL 19	3
6-3.12	Stalled FL 20	3
6-3.13	Matching Card Fault FL 20	3
6-3.14	Modulator Fault FL 22	3
6-3.15	Parameter Too Small FL 23	3
6-3.16	Parameter Too Big FL 24	3
6-3.17	Parameter Change Not Permitted FL 27	3
6-4 : LED Indicators		**4**
6-4.1	LED Indicators on the A1 Supply Unit Control Card	4

Section

6

BULLETIN 1352 SUPERVISION and VISUAL WARNING

6.1 Diagnostic Monitoring

When a malfunction or failure is detected in the drive unit, a numerical fault code will appear on the six digit CP1 control panel display (Figure 6-1). On CP2 equipped drives, the 15 digit display will spell out the fault code. In most cases, the drive stops when a fault code appears, and the fault must be acknowledged and cleared before the drive can be restarted.

Faults 1 thru 24 are reset with the RESET button, while Faults 25 thru 27 must be reset by depressing the DISPLAY button.

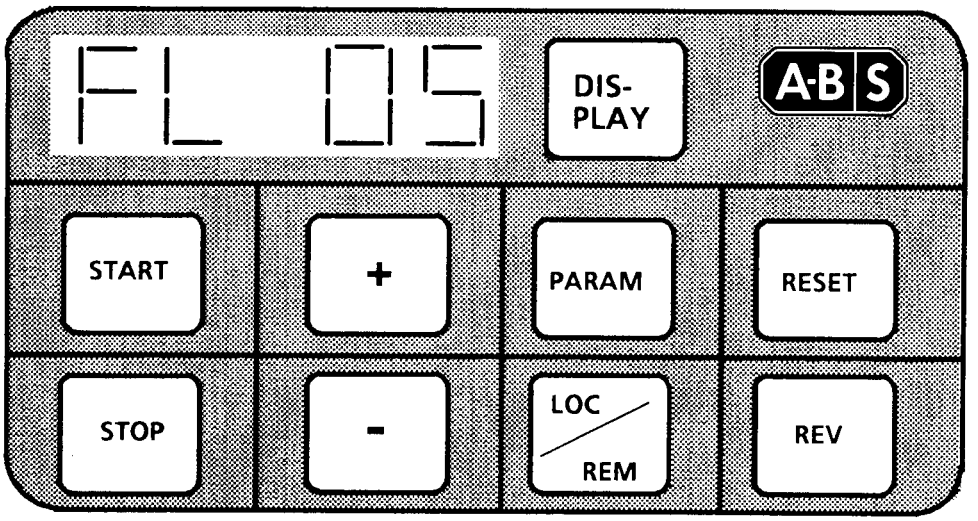

Figure 6-1. CP-1 Control Panel Fault Code Display.

6.2 Fault Codes

The Bulletin 1352 has a six location fault buffer that stores faults in sequential order. Displays occur only when a new fault occurs. Only the first fault indication appears on the panel, while up to six additional faults are stored in the buffer where they can be examined thru the parameter table (parameters 176 - 181). When the fault message that appears on the display is acknowledged, the buffer will not answer. The Fault Codes are detailed in Table 6-1.

Table 6-1. Diagnostic Fault Codes

CODE NO. CP1	CODE CP2	FAULT
01	CHOP UNDERVOLT	Chopper Undervoltage (GTO Models Only)
02	CHOP OVERVOLT	Chopper Overvoltage (GTO Models Only)
03	AUX UNDERVOLT	Auxiliary Voltage Fault
04	OVERTEMPERATURE	Overheating
05	OVERCURRENT	Overcurrent
06	DC OVERVOLT	UC Overvoltage
07	DC UNDERVOLT	UC Undervoltage
08	(NOT USED)	(Not Used)
09	U1 FAULT	V11 - U1 Fault
10	U2 FAULT	V14 - U2 Fault
11	V1 FAULT	V12 - V1 Fault
12	V2 FAULT	V15 - V2 Fault
13	W1 FAULT	V13 - W1 Fault
14	W2 FAULT	V16 - W2 Fault
15	SHORT CIRCUIT	Short Circuit (GTO Models Only)
16	(NOT USED)	(Not Used)
17	COMM FAULT	Serial Communication Fault (CP-2 Only)
18	TACH LOSS	Tachometer Fault
19	I MEAS FAULT	Current Converter Fault
20	MOTOR STALLED	Stalled or Overloaded Motor
21	MATCH CARD FAULT	Matching Card Fault
22	MODULATOR FAULT	Modulator Fault
23	PARAM TOO SMALL	Parameter Number below the lower limit
24	PARAM TOO BIG	Parameter Number above the upper limit
25		Fault Interlock (Ground Fault Option)
26		Fault Interlock (Motor Overtemperature Option)
27	BAD PARAM	Parameter Change Not Permitted

6.3 Diagnostic Messages

In most cases when a fault code appears, the message should be acknowledged, and an attempt made to restart the drive before in depth troubleshooting is undertaken. If the drive repeatedly trips out on start-up, the indication is a problem of greater magnitude than a temporary fault, and the procedures in Chapter VII Trouble Shooting, Fault Tracing and Repair should be consulted.

CAUTION: When Investigating Diagnostic Codes and troubleshooting nuisance tripouts, caution is advised in making any indiscriminate parameter changes. Changing a drive parameter in one area, could effect the operation of the drive in other areas, leading to drive stoppage, equipment damage or inaccurate motor control.

The specific diagnostic messages indicate problems in the following areas;

6-3.1 <u>Chop Undervolt (GTO) FL 01</u> - An incorrect value at Parameter 158, a blown fuse F1 on the Chopper Control Card, a defective thyristor V17 or a disconnected or inoperative Chopper Control Card may cause this indication.

6-3.2 <u>Chop Overvolt (GTO) FL 02</u> - Fuse F1 may be blown, or a inoperative or disconnected Chopper Control Card may be causing this fault indication.

6-3.3 <u>Auxiliary Undervoltage FL 03</u> - The output voltage (+14V, -14V or +5V) of the auxiliary power supply is not within the permissible range. Fuses F1,F6 F7 or F8 on the Auxiliary Power Supply Card may be open or the power supply card has failed.

6-3.4 <u>Overtemperature FL 04</u> - The heat sink temperature is in excess of the permissible limit. Check for possible lack of air circulation due to blockage of cabinet vents or a fan failure. If the drive trips again on restart after a

sufficient cool down period (At least 20 minutes) the Temperature Sensor,Sensor Card or Control Card may have failed.

6-3.5 **Overcurrent FL 05** - The output current is in excess of the permissible limit. An overcurrent could be caused by an overloaded motor, or possibly incorrect IR-Compensation or Torque Limit settings. If the value of phase currents rises above 1000, the fault may be in the control card or current converter.

6-3.6 **D.C. Overvoltage FL 06** - The direct voltage is in excess of the permissible limit (130% of rated voltage) The Matching Card, Auxiliary Voltage Supply and the Control Card are all possible causes of overvoltage. The simulated switching feature (see Sect. 7-3.1) should also be checked to make certain it is not connected and supplying additional voltage.

6-3.7 **D.C. Undervoltage FL 07** - The Direct Voltage is below the permissible limit (70% of rated voltage). Blown fuses or an open contactor in the D.C. Intermediate unit of the drive are possible causes of undervoltage. If the fuses and contactors are intact and operating correctly, the problem may be on the Control Card or Auxiliary Voltage Supply Card.

6-3.8 **V11-U1 ---- V16-W2 Fault FL 09 - 14**- These six faults indicate an output stage fault and pinpoint which Semiconductor, pulse amplifier or phase is faulty. Possible causes of the fault are short circuits in the output connecter or phase power semiconducters, failed pulse amplifiers, faulty connecter cables between cards, blown fuses in the auxiliary voltage supply or possibly a failed Pulse Amplifier Card or Control Card.

6-3.9 **Short Circuit (GTO) FL 15** - A short circuit in the output connector, or a disconnected or faulty chopper control card can cause this indication.

6-3.10 **Tach Loss FL 18** - The motor has stalled or tachgenerator pulses are inaccurate or have been lost on tach feedback equipped units. The motor and tach cables should be inspected before an attempt to restart is made.

6-3.11 **Measurement Fault FL 19**- A current converter is malfunctioning or has failed. Current is diverging more than the permissible amount defined by parameter 190. A failed current transducer or inaccurate IR phase current values could be possible causes.

6-3.12 **Stalled FL 20** - Motor stalled. An overload, incorrect parameters, a faulty control card or motor are possible causes of this indication. The motor should be inspected before a restart is attempted.

6-3.13 **Matching Card Fault FL 21**- An incorrect or disconnected matching card will cause this fault.

6-3.14 **Modulator Fault FL 22** - The execution of the control program of the drive is shut down. If the drive cannot be restarted after a 1 minute delay the communication card is probably faulty.

6-3.15 **Parameter Too Small FL 23** - An incorrect parameter number has been entered. Increase the parameter number in question before attempting to restart the drive.

6-3.16 **Parameter Too Big FL 24** - An incorrect parameter number has been entered. Decrease the parameter number in question before attempting to restart the drive.

6-3.17 **Parameter Change Not Permitted FL 27** - Certain parameters are critical to drive operation and alterations are not allowed.

6.4 LED Indicators

6-4.1 LED Indicators on the A1 Supply Unit Control Card (Series A & G.T.O. Types)

The A1 Supply Unit Control Card has five LED's on the card to indicate the state of the Line Supply Unit (Figure 6-2).

The Green LED V7 indicates the charging contactor K8 has closed.

The Green LED V8 indicates that the Main Contactor K7 has closed and that power is present in the circuit.

The Red LED V9 lights when an overtemperature condition exsists in the Line Converter Unit (LCU) or the Capacitor Bank Unit (CBU).

The Red LED V10 lights when an overtemperature condition exsists in the Braking Chopper (BRC).

The Green LED V11 lights when the Emergency Stop Relay has activated.

Important: Bulletin 1352 Series B Drives are not equipped with an A1 Supply Unit Control Card or LED indicators.

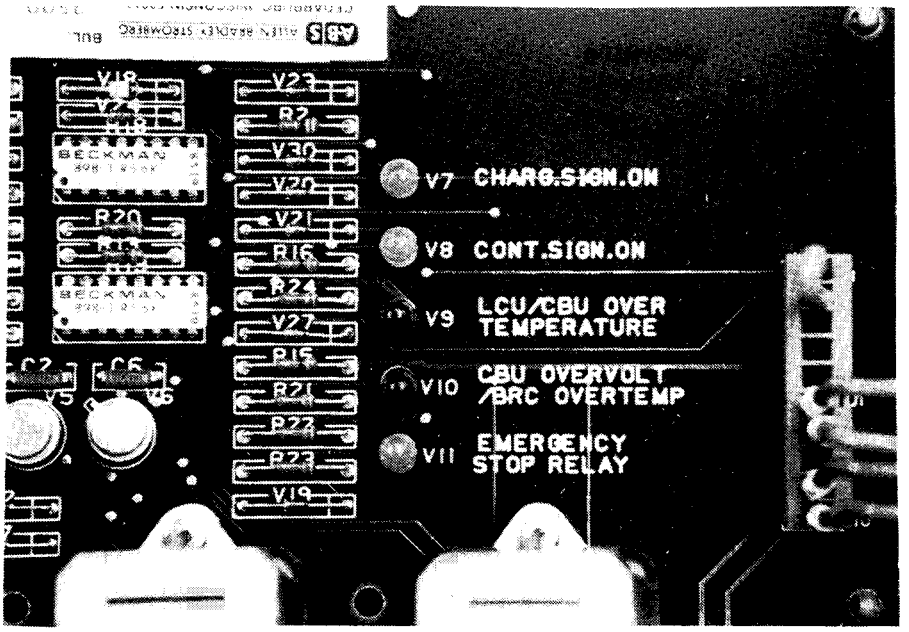

Figure 6-2. A1 Control Card LED Indicators

TROUBLESHOOTING

TABLE OF CONTENTS
Chapter 7
Troubleshooting

SECTION	PAGE
7-1 : General Instructions	**1**
7-1.1 Test Instruments and Tools	1
7-1.2 Principle of Fault Tracing	1
7-2 : Testing Methods	**1**
7-2.1 Choosing the Right Fault Tracing Instruction	2
7-2.2 Diagnostics	2
7-3 : Troubleshooting Table	**4**
7-4 : Trending	**10**
7-5 : Checking & Replacement of Power Semiconductors	**10**
7-5.1 Installation Instructions	12
7-6 : Simulation Testing	**21**
7-6.1 Setting Up a Simulation Circuit (GTR Units)	21
7-6.2 Setting Up a Simulation Circuit (GTO Units)	21
7-6.3 Simulation Circuit Start-Up	21
7-6.4 Circuit Board Testing	21
7-6.4.1 Pulse Amplifier Board	21
7-7 : Changing Printed Circuit Boards	**22**
7-7.1 Circuit Board Replacement	22
7-7.2 Control Card Replacement	22
7-8 : Fault Table	**23**

Chapter

7

BULLETIN 1352 TROUBLESHOOTING

7-1 General Instructions

7-1.1 **Test Instruments and Tools** - The following test instruments and tools are required for fault tracing and repair:

A. Multimeter capable of 1000VDC/750VAC, with input resistance of at least 1 megohm.

B. Test leads

C. Assorted (Phillips and Blade type) screwdrivers

D. Set of metric box-end or open-end wrenches or sockets, sizes 5-1/2, 7, 10, 13, 17, 19 and 24 mm in particular.

E. Soldering iron (suitable for use with CMOS circuits i.e. grounded tip) and solder.

7-1.2 **Principle of Fault Tracing** - The fault tracing method presented here is based on systematic tracing of the fault location and then systematic testing using spare circuit cards. For most fault conditions, replacement of control circuit cards seems to isolate the problem in the shortest period of time. The cards required are listed under "Recommended Spares" in Table 8-1.

A TREND program is also available to aid in the diagnostic procedure. The trending function is described in paragraph 7-1.7.

The fault tracing method assumes that only one fault has occurred at a particular time, possibly causing further effects such as blown fuses, although the system can actually store six sequential faults in the fault buffer. Thus, when replacing components or cards in the unit, ensure that the new part is a known serviceable component and that it is adjusted in the same way as the component being replaced.

7-2 Testing Methods

WARNING : Servicing energized industrial control equipment can be hazardous. Severe injury or death can result from electrical shock, burn, or unintended actuation of controlled equipment.

Recommended practice is to disconnect and lock out control equipment from power sources, and discharge stored energy in capacitors, if present. If it is necessary to work in the vicinity of energized equipment, the safety related work practices of NFPA 70E, Electrical Safety Requirements for Employee Workplaces , must be followed.

Do not remove the aluminum and plastic protection panels needlessly during fault tracing. This is usually unnecessary and can expose the personnel to potential hazards from voltage sources present in the unit. Always replace protective panels before operating unit.

CAUTION: Do not perform measurements to any other points on the card. Such measurements could damage circuit components.

In order to avoid damage to the CMOS circuits from an accidental discharge of static electricity, the following rules must be followed when handling the circuit cards and performing measurement checks on the cards:

A. Before removing a card from the rack, discharge your own static charge by touching an unpainted point such as on the rack. The use of a properly grounded wrist strap is recommended when performing any checks or tests on cards.

B. When configuring jumpers or checking a detached circuit board, it should preferably be laid on a conductive, grounded surface.

C. Test measurements on the control circuit cards are only permitted while the cards are in place and then only to the permissible test points .

CAUTION: The CMOS circuits utilized on the control circuit cards can be destroyed by static charges generated by friction of materials made of synthetic fibers. Use of faulty circuit cards may also damage related components.

D. DO NOT connect the common terminal of test instruments operated from the main supply to the common terminal (M) of the auxiliary voltage (+12V) unless power to the Drive is disconnected.

E. The probe of the test instrument can be moved from one test point to another while the Drive is operating, provided that the probe is first grounded by touching it to the common probe of the test meter or scope.

7-2.1 **Choosing the Right Fault Tracing Instruction** - The following paragraphs match the fault situations that constitute the starting points for fault tracing. In some cases, operating personnel will have to reset the fault and then attempt to restart the unit. The fault tracing procedure should start at the point corresponding to the original fault indication. Occasionally, the cause of a malfunction of the unit must be determined without any visible LED fault indications.

7-2.2 **Diagnostics** - Diagnostics examines inverter status and clarifies fault states. The inverter determines STATUSWORD and faults on a states basis and acquires fault word FAULTWORD0 and FAULTWORD1.

SAMISTATUS

Least Significant Bit	0-	modulation
	1-	ready
	2-	fault
	3 -	
	4 -	
	5 -	
	6 -	
	7 -	
	8 -	
	9 -	
	10-	
	11-	
	12-	
	13-	
	14-	
Most Significant Bit	15-	

FAULTWORD0		No	FAULTWORD1		No
LSB	0 chopper undervoltage	1	LSB	0 Serial Communicate fault	17
	1 chopper overvoltage	2		1 tachometer fault	18
	2 auxiliary voltage fault	3		2 current converter fault	19
	3 overheating	4		3 stalled	20
	4 overcurrent	5		4 matching card fault	21
	5 UC overvoltage	6		5 modulator fault	22
	6 UC undervoltage	7		6 param too small	23
	7	8		7 param too big	24
	8 V11-U1-fault	9		8 Customer Fault Interlock	25
	9 V14-U2-fault	10		9 Customer Fault Interlock	26
	10 V12-V1-fault	11		10 Incorrect Parameter	27
	11 V15-V2-fault	12		11	
	12 V13-W1-fault	13		12	
	13 V16-W2-fault	14		13	
	14 short circuit	15		14	
MSB	15		MSB	15	

The inverter also contains a fault buffer in which faults are stored in sequential order. The buffer has 6 locations and is situated in the SAMITABLE locations 176 to 181. The buffer does not answer back during acknowledgment but instead responds only when a new fault is received at the buffer. In this case, the first fault of the previous case is always in location 176. Faults are present in the buffer in locations 1 to 27. ex. overcurrent in location 5 and tachometer fault in location 18. .

IMPORTANT: The fault buffer and trend buffer information is lost if power is removed from the drive. Section 3-2.3.2 contains information on how to defeat the door interlock mechanism.

If, for example : the motor stalled due to an undervoltage situation. If the drive sensed the motor stall before the undervoltage, the fault 20 "Stalled" would appear on the display panel, and the fault 6 "UC undervoltage" would be stored in the second location in the fault buffer.

CAUTION: On Series B units,the TR1 relay precharge time setting must not be changed or readjusted during troubleshooting. Changing the TR1 relay factory time setting could result in damage to the drive or create an undervoltage situation causing the drive to trip out repeatedly. The proper setting is .525 to .60 seconds.

7-3
Troubleshooting Table

Diagnostic Display	Probable Cause	Recommended Solution
FL 01 (CP-1) or CHOP UNDERVOLT (Optional CP-2 Panel)	Chopper is faulty.	Check that LED located on the chopper control card is illuminated and that the wires of thyristor V17 are firmly connected. If LED is illuminated, check that the card connector X2 is firmly connected and fuse F1 on the Chopper Control Card is not damaged. IF the fault occurs during start-up check that the DC voltage is 85 % of the rated voltage, and that connector X4 is firmly connected. Check the wires to thyristor V17 for proper connection, and check the thyristor for proper operation. If the fault is not found, replace chopper control card and control card as required.
FL02 (CP-1)	Chopper is Faulty	Reset the fault and attempt to restart the drive. If the fault repeats, replace the Chopper Control Card or the Control Card as required.
FL 03 (CP-1) or AUX UNDERVOLT (Optional CP-2 Panel)	Auxiliary voltage defective. The + 14V, -14V or + 5V from the INU Auxiliary voltage source is outside the allowable range	Acknowledge the fault. In case the fault is repeated during start-up, the auxiliary power supply is defective. If it is not possible to acknowledge the fault, ensure that the LED of auxiliary power supply of the GTO-inverter is illuminated. If the LED is ON, the power supply if functioning properly. If LED is OFF, check the fuses located on the card. In the case of the GTR-inverter, check fuses F1, F6, F7 and F8. (These fuses are not associated with LED indicators).

Troubleshooting Table (cont.)

Diagnostic Display	Probable Cause	Recommended Solution
FL 04 (CP-1) or OVERTEMPERATURE (Optional CP-2 Panel)	Ambient temperature is too high or the air circulation is hindered on the INU heatsink.	Check that fan rotates and cooling air is circulating. Check that nothing is blocking air circulation. If ambient temperature is above 45°C, wait approximately 20 minutes until inverter is cool and then try to acknowledge the alarm. If the fault is not acknowledged, operate in the simulated mode (see 7-3), disconnect wires from temperature sensor card and short the corresponding circuit leads. If it is possible to acknowledge the fault, then the fault is in the temperature sensor or in its connecting wires. Measure resistance of disconnected wire. If resistance is high, it means that contacts of the temperature sensor are defective. If it is not possible to acknowledge the fault, replace the card to which wires are connected. Replace the control card as required.
FL 05 (CP-1) or OVERCURRENT (Optional CP-2 Panel)	Overload IR Compensation setting is erroneous. Torque limits are erroneous.	Acknowledge fault. In case the fault is confirmed, check the following factors: • Motor Cables are correct • type of matching card • motor HP is not too large. • in the case of an alarm, in the low frequencies, check the setting of parameter 70 and reduce it as needed • torque limits settings 58 and 59. In case the fault is not confirmed, check values of phase currents IR (219) and IS (220). If the current value is above 1000, check that the current converter cable is firmly connected at both ends. If the value of second current is high, then the fault is probably in the converter. If the fault has not been determined, replace control card and current converter as required.

Troubleshooting Table
(cont,)

Diagnostic Display	Probable Cause	Recommended Solution
FL 06 (CP-1) or DC OVERVOLT (Optional CP-2 Panel)	DC voltage is too high. Repeated overvoltage faults. Simulated switching remained connected after testing.	Acknowledge fault. If fault is not acknowledged, check the following factors: • type of matching card corresponds to the inverter model type. • Check for transient overvoltage peaks in the supply mains. • simulated switching is eliminated. • DC voltage is in the permitted ranges. • Check the D.C. Intermediate circuit voltage at table address 207, where 1000 equals the rated U_{DCN}. If the cause of the fault has not been determined, replace the auxiliary voltage supply and control card as required. In the case of the fault reappearing during running time, check if overvoltages occur in the feeding network.
FL 07 (CP-1) or DC UNDERVOLT (Optional CP-2 Panel)	DC voltage is too low.	Acknowledge fault. In case the fault is repeated during inverter start-up, check the following factors: • the main contactor is closed and fuses in the DC voltage line are not blown. • type of matching card corresponds to the inverter model type. • DC voltage is in the permitted ranges. If the cause of the fault has not been determined, replace the auxiliary voltage supply and control card as required.

Troubleshooting Table
(cont.)

Diagnostic Display	Probable Cause	Recommended Solution
FL 09 or V11-U1 FAULT FL 10or V14-U2 FAULT FL 11 or V12-V1 FAULT FL 12 or V15-V2 FAULT FL13 or V13-W1 FAULT FL14 or V16-W2 FAULT (GTO ONLY)	Power semiconductor device or pulse amplifier malfunction. E.g. V12-V1 FAULT refers to the power semiconductor of upper branch or its pulse amplifier.	Acknowledge the fault. If the fault is acknowledged, a corresponding pulse amplifier malfunction probably exists. If the fault occurs again, change the corresponding pulse amplifier. If the fault is not acknowledged, check that the pulse amplifier LEDs are lit. If one LED is not lit, check connector X3 for proper connection. Check the condition of fuses F1 and F2. If one fuse is blown, check the corresponding GTO for proper operation. If the fault is not located, change the pulse amplifiers and control card as needed.
FL 09 or V11-U1 FAULT FL 10 or V14-U2 FAULT FL 11 or V12-V1 FAULT FL 12 or V15-V2 FAULT FL13 or V13-W1 FAULT FL14 or V16-W2 FAULT (GTR ONLY)	Power semiconductor device or pulse amplifier malfunction. E.g. V12-V1 FAULT refers to the power semiconductor of upper branch or its pulse amplifier. Short circuit in output connector of GTR-inverter.	Acknowledge the fault. Start-up the inverter. If the fault occurs again, there is a short circuit in the output connector or phase power semi-conductor device of the phase indicated by the fault code or pulse amplifier malfunction. In the case that there is no short circuit in the output connector, check the condition of the power semiconductor device. If it is not possible to acknowledge the fault, check that the flat cables of control and pulse amplifier cards are firmly connected. Check the fuses F2 through F5 of auxiliary voltage supply. If one of the fuses has blown, check the condition of the power semiconductor device. If the fault is not found, replace the pulse amplifier card and control card as required.

Troubleshooting Table
(cont.)

Diagnostic Display	Probable Cause	Recommended Solution
FL 17 (CP-1) or NO DATA RECEIVED (Optional CP-2 Panel)	Serial Communications link is broken. The control card has no voltage supply. The Baud Rate values are wrong.	If LED located on the A1 Supply control card is not illuminated, check that cables connecting auxiliary power supply and control card are firmly connected. If the LED located on the control card is illuminated, the fault is in the terminal strip card or Baud Rate values are improperly set. Check that the Baud Rate value of the inverter and the control card are the same. Baud Rate of Serial communications channel 1 is selected by means of switch S1 located on the control card. The position a-c corresponds to the 4800 Bd while position a-b corresponds to 9600 Bd. The Baud Rate for channel 2 is selected by means of parameter 170. Check that Serial communications link cables are properly connected and not broken.
FL 17 (CP-1) or COMM FAULT (Optional CP-2 Panel)	Serial Communications channel link break which indicates that the inverter has not received messages at a certain time from control devices. In this situation, the operation of the inverter has been defined by parameters 171 and 172.	Check that the serial communication link is not damaged.
FL 18 (CP-1) or TACH LOSS (Optional CP-2 Panel) (Vector Control Only)	Tachogenerator pulses are faulty or non-exsistant Tachometer installation is wrong. Motor is stalled. The operation of the inverter in this situation is determined by parameter 78.	Check that the motor is not stalled. Check the tachometer cables and tachometer installation.

Troubleshooting Table
(cont.)

Diagnostic Display	Probable Cause	Recommended Solution
FL 19 (CP-1) or I MEAS FAULT (Optional CP-2 Panel)	No output from Hall Effect Current Transducer. Control Card is inoperative. Connection between Hall Device and Control Card Loose.	Acknowledge the fault and start-up the inverter. If the fault occurs again, check the phase current values IR (219) and (220), when the inverter is not running. Their absolute values must be less than the parameter 190 value (Mfg. setting 500). If not, the control card corresponding current converter is defective.
FL 20 (CP-1) or MOTOR STALLED (Optional CP-2 Panel)	Motor Stalled due to overload , low voltage supply, or problem in motor. IR Comp remained on longer than the Time set by Param.90	Check voltage supply to motor. Check motor for overheating. Remove load from motor and attempt to restart. Replace motor as required. Adjust Parameter 90(See Sect. 4-3.4)
FL 21 (CP-1) or MATCH CARD FAULT (Optional CP-2)	The cable of the matching card is disconnected. The matching card type is wrong.	Check that the matching card is firmly connected. Check that matching card type corresponds to the inverter type.
FL 22 (CP-1) or MODULATOR FAULT (Optional CP-2 Panel)	Program execution has stopped.	Turn the power OFF for approximately 1 minute. If the fault is not corrected, replace the control card.
FL 23 (CP-1) PARAM TOO SMALL	Too low a value has been entered.	The drive will automatically set the minimum allowable value. Reset the fault.
FL 24 (CP-1) PARAM TOO BIG	Too high a value has been entered.	The drive will automatically set the maximum allowable value. Reset the fault.
FL25	User Programmable Fault Message	Refer to SPECIAL DISPLAY BLOCK for the possible cause of the fault.
FL26	User Programmable Fault Message	Refer to SPECIAL DISPLAY BLOCK for the possible cause of the fault.
FL27 (CP-1) BAD PARAM	Parameter Change Not allowed at this location.	The drive will retain the original value. Reset the fault.
No Display, Panel Blank, Drive will not start.	No input voltage or Disconnect Switch open.	Check the incoming supply voltages and attempt to close the main contactor. On Series A drives, check the Contactor Unit Control Card to see if the V7 Charge Sign On LED is illuminated. Check the Disconnect Switch operation.

7-4 Trending

The TREND function can be used for troubleshooting in cases where faults occur randomly /or intermittently. Eight (8) different quantities can be monitored using the control panel. These quantities are stored in storage buffers located in the parameter locations shown in Table 7-1.

Table 7-1 Trend Buffer Table

TREND BUFFER #	BUFFER LOCATION	PARAMETER LOCATION MONITORED	TREND FETCH	STORAGE PARAM LOCATION
1	191TEE	207 (DC BUS VOLTAGE)	320	500 - 599
2	192TEE	235 (EMF- MOTOR FLUX)	321	600 - 699
3	193TEE	205 (TOTAL CURRENT)	322	700 - 799
4	194TEE	202 (ACTUAL CURRENT)	323	800 - 899
5	195TEE	219 ("A" PHASE CURRENT (Instantaneous))	324	900 - 999
6	241TEE	226 (FREQUENCY REF. AFTER RAMP)	325	1000 - 1099
7	242TEE	208 (OUTPUT FREQUENCY ACTUAL)	326	1100 - 1199
8	243TEE	245 (DIGITAL INPUT STATUS)	327	1200 - 1299

If this option is purchased,the eight (8) trend buffers have pre-set locations which are being monitored (ex. Buffer 1 is monitoring Parameter 207, DC Bus Voltage). The Trend Fetch parameters are necessary to bring the 100 samples stored in the buffer to the control panel , monitor or printer for examination. Parameter 196TEE is used to set the rate at which samples are stored in the buffer. If:

196TEE = 0 or 1, samples occur at a 4ms rate.
196TEE = 2, samples occur at a 8ms rate.
196TEE = 3, samples ocur at a 12ms rate.

Parameter 197TEE must be set to trigger the trending function. If 197TEE is set to -1, the trending will trigger on any fault. If 197TEE is less than or greater than -1, the trending action will be triggered when the difference between two consecutive values in buffer # 1 exceeds the set limit.

EXAMPLE: If trigger = 20 triggering will occur when the value in the buffer # 1 reaches 79 or 121. At this point, all eight buffers will be activated and triggered with 80 samples stored before and 20 samples after the trigger event.

Parameter 199T TRENDSAVE can also be used to activate the trigger by setting it < > 0. Parameter 200T increments each time a trend is triggered. This can be used to verify a trigger has occured.

IMPORTANT: The fault buffer and trend buffer information is lost if power is removed from the drive. Section 3-2.3.2 contains information on how to defeat the door interlock mechanism.

7-5 Checking and Replacement of Power Semiconductors

When testing power semiconductors, the measurements must be made with a multimeter that uses a sufficiently high current for resistance measurements. Always determine the polarity of your instrument leads when performing resistance measurements.

If it is suspected that a damaged GTR power semiconductor device exists, proceed as follows:

- Before proceeding,verify that the drive is voltage free.
- Disconnect motor cables
- Disconnect card terminals of power devices

- Measure the collector to emitter and collector to base resistances (positive probe in contact with the collector lead). The resistances must be different from those in the short circuit state (the resistance value depends both on the ohmmeter used and the semiconductor device itself). Generally, this is a resistance greater than 10k Ohm.
- Reapply voltage to the drive.

CAUTION: Hazardous voltages will be present in the drive when performing the following tests! Only Qualifed personnel should perform these measurements

- Allow sufficient time for the intermediate circuit to charge up to measurement voltage. Switch the meter for a voltage measurement and ensure that the offset voltage of the diodes between base and collector and emitter and collector (anode in contact with first mentioned lead) is approximately 0.3V to 0.5V.

If a damaged or malfunctioning GTO power semiconductor or Free -Wheeling Diode is suspected, proceed as follows:

- Verify that all the Drive is voltage free before proceeding.
- disconnect motor cables
- disconnect card terminals of power devices
- Measure the collector to cathode, anode to gate, and cathode to gate resistances (positive probe in contact with the first lead mentioned). The resistances must be different from those in the short circuit state (the resistance value depends both on the ohmmeter used and the semiconductor device itself).
- Reapply voltage to the drive.

CAUTION: Hazardous voltages will be present in the drive when performing the following tests! Only Qualifed personnel should perform these measurements

- Allow sufficient time for the intermediate circuit to charge up to measurement voltage. Switch the meter for a voltage measurement and ensure that diode junctions exsist between gate and the cathode (anode on gate). Offset voltage should be approximately 0.5V. Check the diodes by measuring resistance between the cathode and anode (power removed) and in the voltage range measure offset voltage anode to cathode. If a damaged free-wheeling diode is suspected, both the diode and thyristor will have to be removed from the heat sink since they are connected in parallel. Remove the thyristor by opening its clamp, and measure the diode condition. NOTE: It is impossible to accurately measure the condition of the thyristor when it is unclamped!
- If the short circuit has been located, the semiconductor device is faulty and must be replaced.
- Remove power from the drive, and remove the faulty semiconductor. If necessary, also detach the conductor busbar positioned across the semiconductor as well as any associated leads. Note the direction in which the device was originally installed. This will ensure correct polarity when a replacement semiconductor is installed.

7-5.1 Installation Instructions - Power semiconductors are precision devices. New semiconductors should be stored in their original packages until required. **IMPORTANT:** To avoid confusion with "good" components, always clearly mark suspected faulty components after removing them from the circuit.

A. When replacing components, check that the new and old components have the same type designation or that the new component can replace the old one. At this stage, review the phases of the replacement procedure and consider orientation of the heatsink. Care should be taken to assure original clearances are maintained between heatsink components to reduce possibility of arc-over when voltage is applied to the Drive.

B. Preparation of the heatsink and busbar:
If the area is clean, spread out the remaining heatconducting compound with a rubber spatula to obtain even distribution of compound. If the area is dirty, wipe the heatsink surface and the busbar clean. Do not clean the surfaces too thoroughly of all grease residue, since the machined aluminum surface will oxidize in a few seconds possibly producing a poor heat conductive surface.

C. GTR Installation -

1. Clean the semiconductor contact surfaces with a nontoxic solvent and spread heat conducting paste on the base of the heat sink.
2. Install the module in the heatsink and secure the clamping screws to the following torque, tightening the screws alternately 1/8 turn at a time.

Thread	Torque
M4	20 Nm (48 ft. lb.)
M5	25 Nm (60 ft. lb.)
M6	30 Nm (72 ft. lb.)

3. Check the insulator and connections for damage and clean the insulator and surrounding area with a nontoxic solvent dampened paper towel. Tighten the wires and conductor rails to the connector using the following torques:

Thread	Torque
M4	17 Nm (41 ft. lb.)
M5	17 Nm (41 ft. lb.)
M6	25 Nm (60 ft. lb.)

D. GTO Installation -

1. Preparation of the semiconductor: Lightly rub the contact surface carefully against a piece of No. 400 grit emery paper on a flat even surface with circular movements. Clean the surfaces with a suitable nontoxic solvent and immediately apply a very thin layer of heat-conducting compound (Penitrox A or equivalent) on the contact surfaces using a rubber spatula. Resolder the firing leads to the GTO thyristor. The grey lead connects to the gate which is the electrode protruding from the side of the thyristor through the insulator. The red lead connects to the other pin which is connected to the thyristor cathode.
2. Tightening the press clamp: Place the centering pin in position and check to be sure that length is not excessive. Place the semiconductor under the press clamp (Type SLZF) and turn the clamp plus or minus 90' left and right, leaving it in a position where the connecting leads are not subjected to any stresses or sharp bends. This procedure ensures

spreading of the heat-conducting compound and adequate surface contact of the semiconductor. Place the Mounting Force Indicator (dial indicator) on the spring beam and zero it. Tighten the press clamp to finger tightness (screws tight but no deflection of the beam). Check that the beam is parallel with the heatsink surface. Determine the required compression force from the semiconductor equipment list and read the correct beam deflection from the charts in Figures 7-1 thru 7-5. It may be advisable to contact your Allen-Bradley Area Support Center to confirm the correct mounting force for a particular semiconductor.

3. Tighten wires and conductor busbar to the connector, maintaining the following torque requirements:

Thread	Torque
M4	17 Nm (41 ft. lb.)
M5	17 Nm (41 ft. lb.)
M6	25 Nm (60 ft. lb.)

4. Clean the insulator of the semiconductor and its surrounding area with a disposable wiper moistened with a nontoxic solvent if necessary. Check that the insulators and the connections are intact.

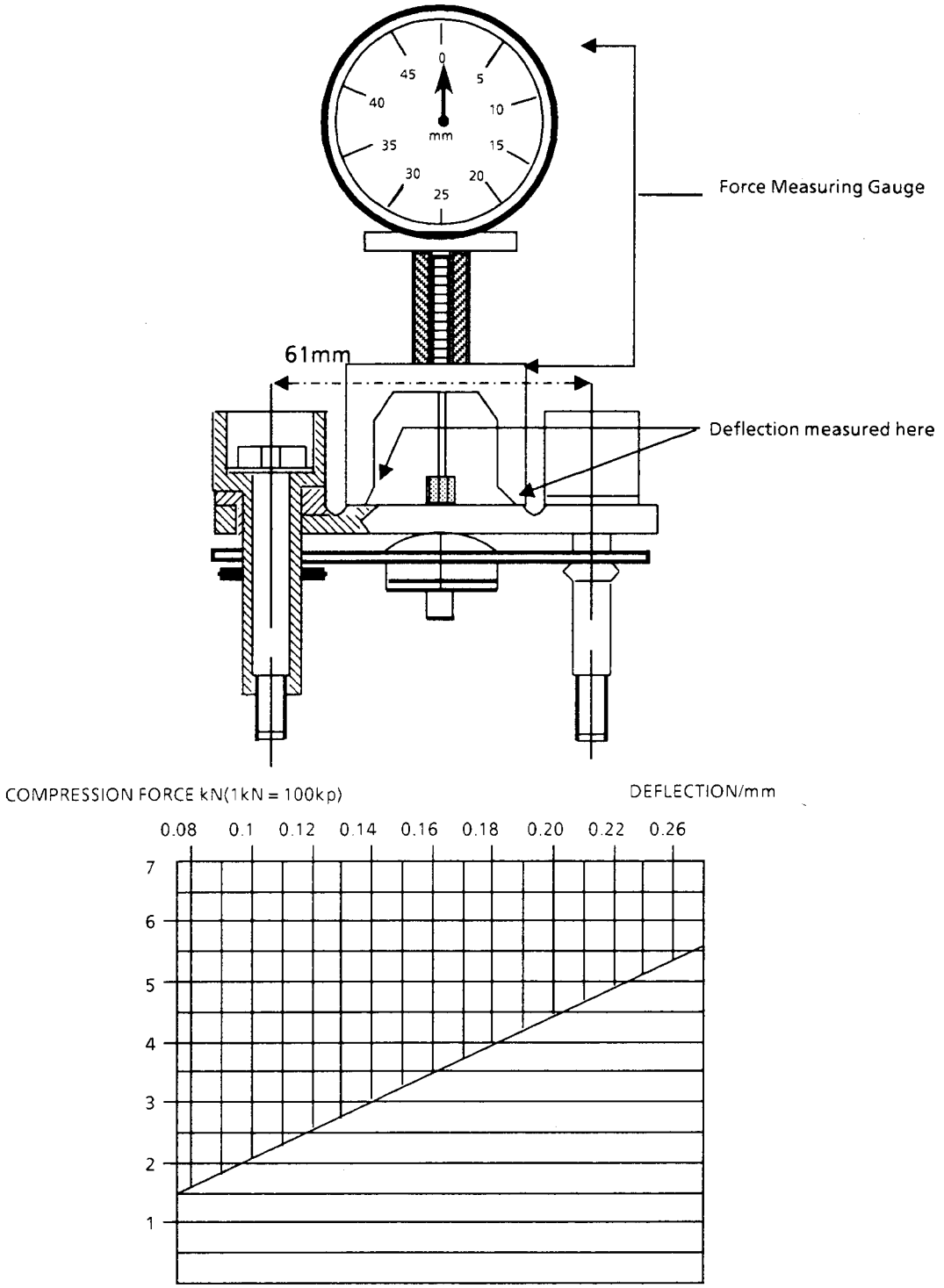

Figure 7-1. Sketch of type SLZF 61 press clamp and its compression force vs deflection of spring beam.

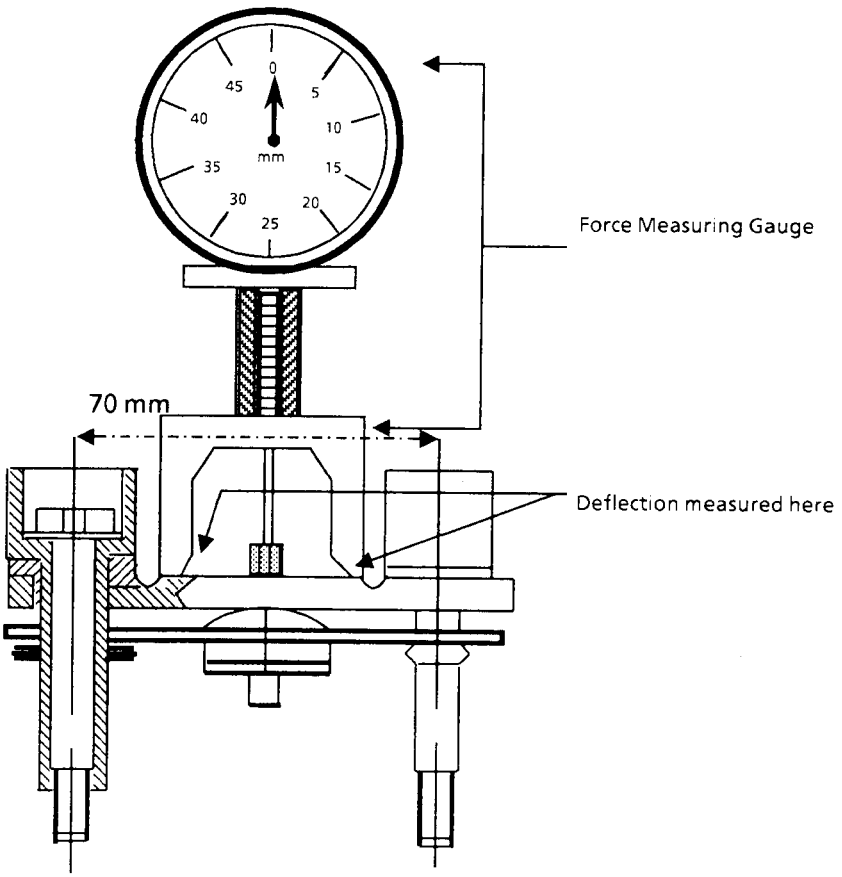

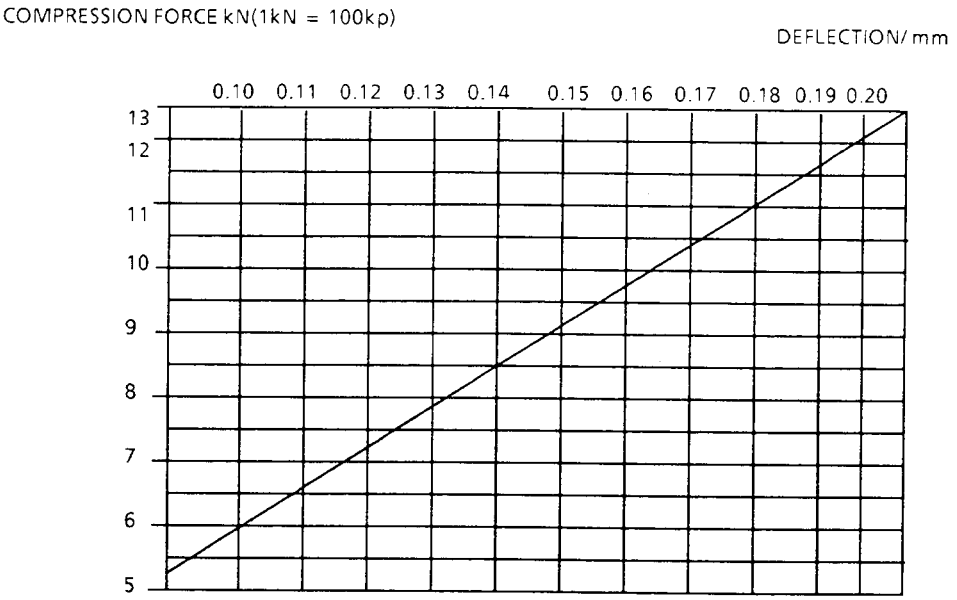

Figure 7-2. Sketch of type SLZF 70A press clamp and its compression force vs. deflection of spring beam.

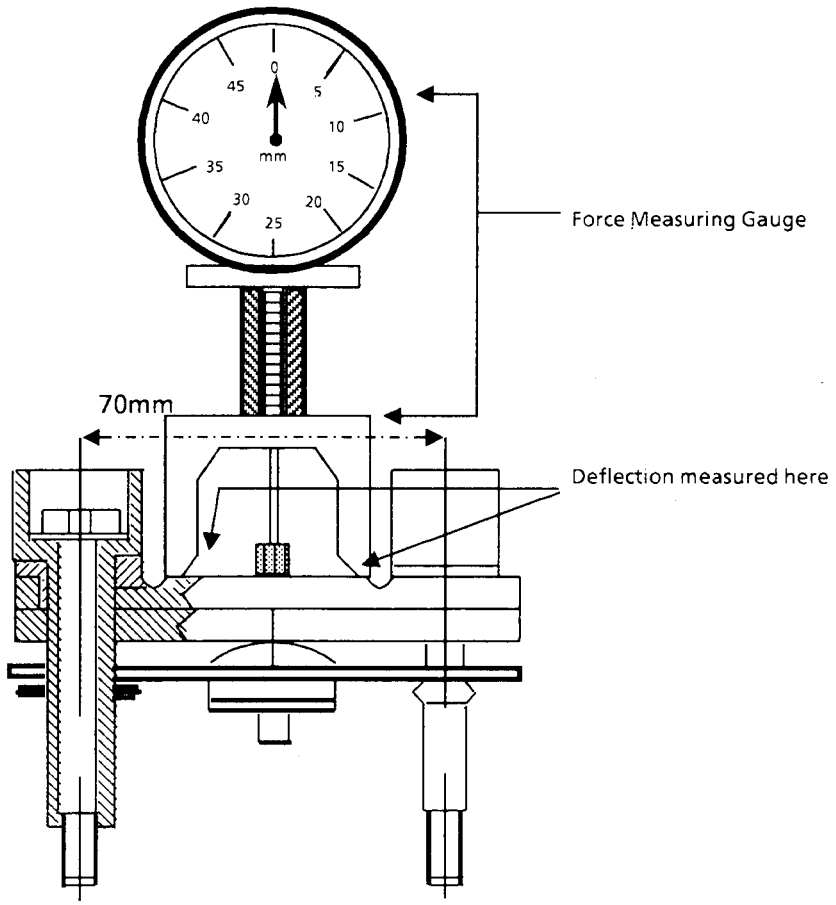

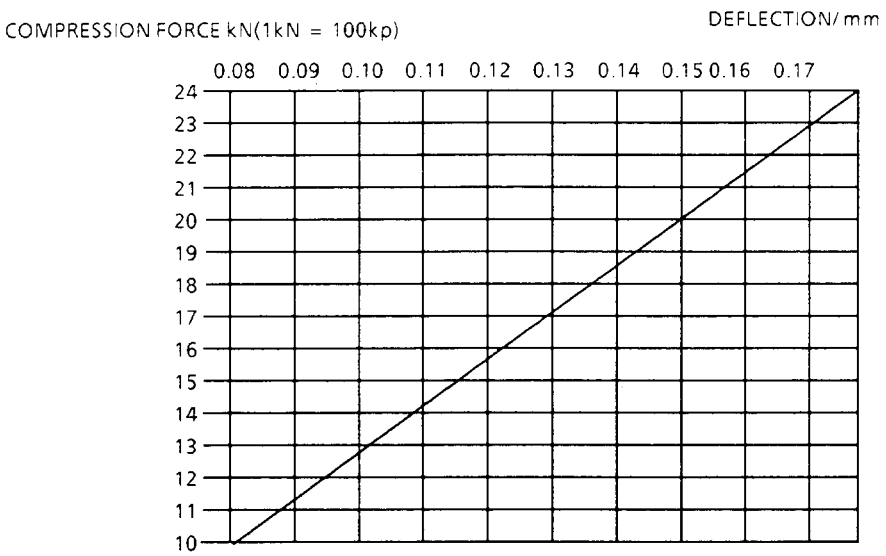

Figure 7-3. Sketch of type SLZF 70B press clamp and its compression force vs. deflection of spring beam.

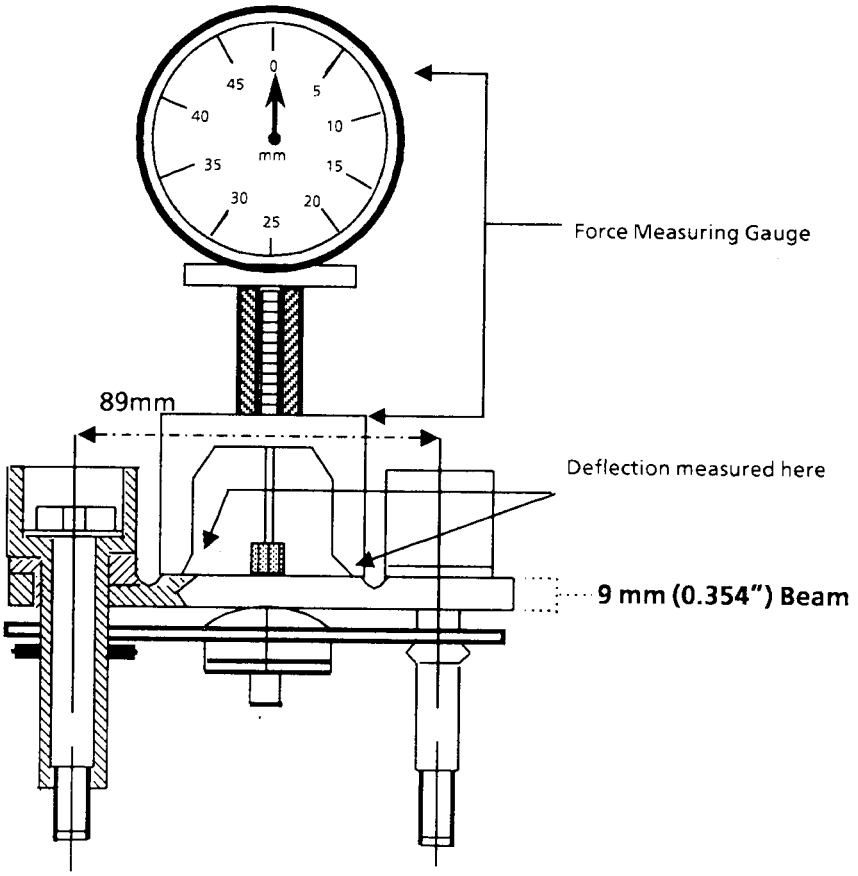

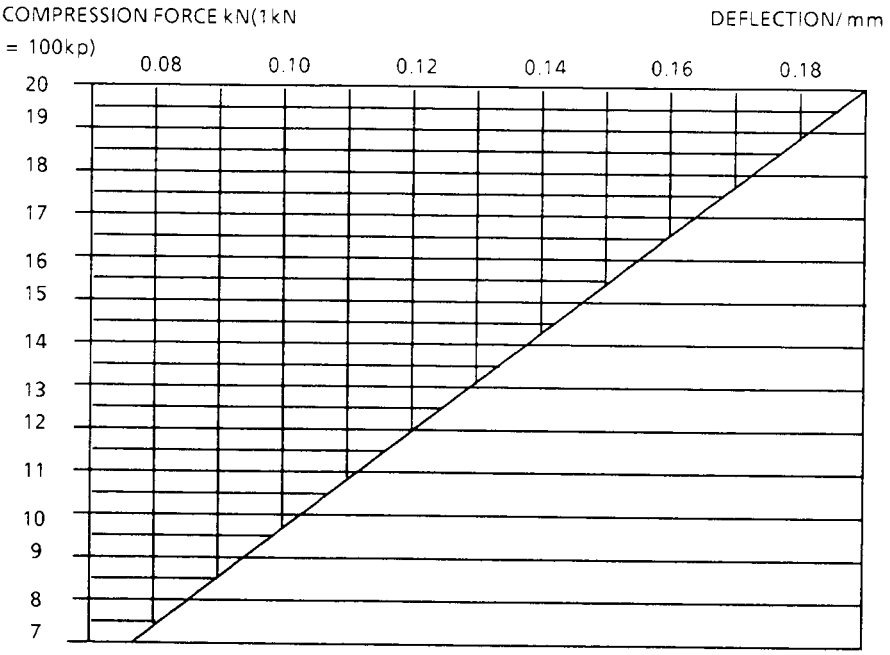

Figure 7-4. Sketch of type SLZF 89A press clamp and its compression force vs. deflection of spring beam.

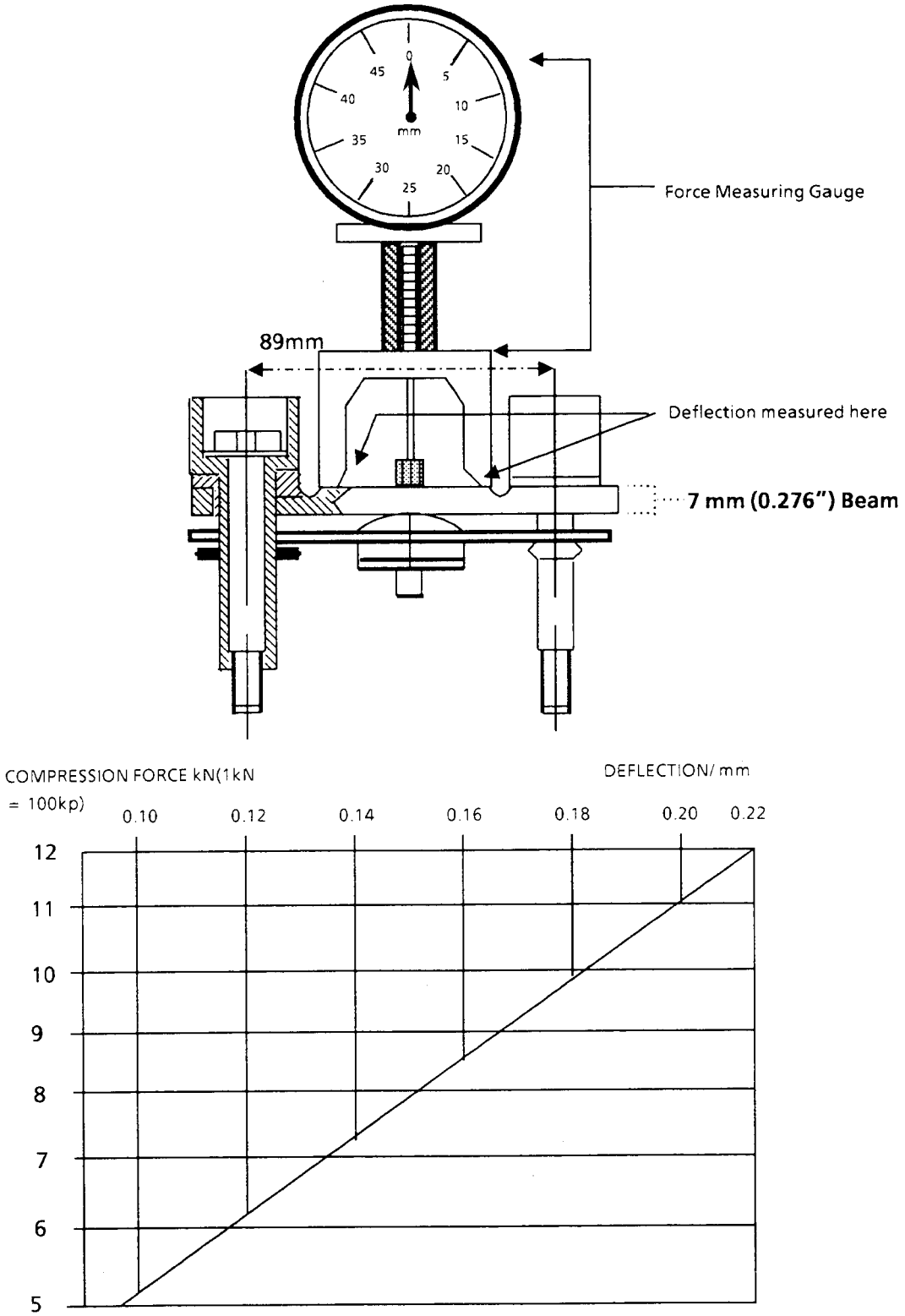

Figure 7-5. Sketch of type SLZF 89C press clamp and its compression force vs. deflection of spring beam.

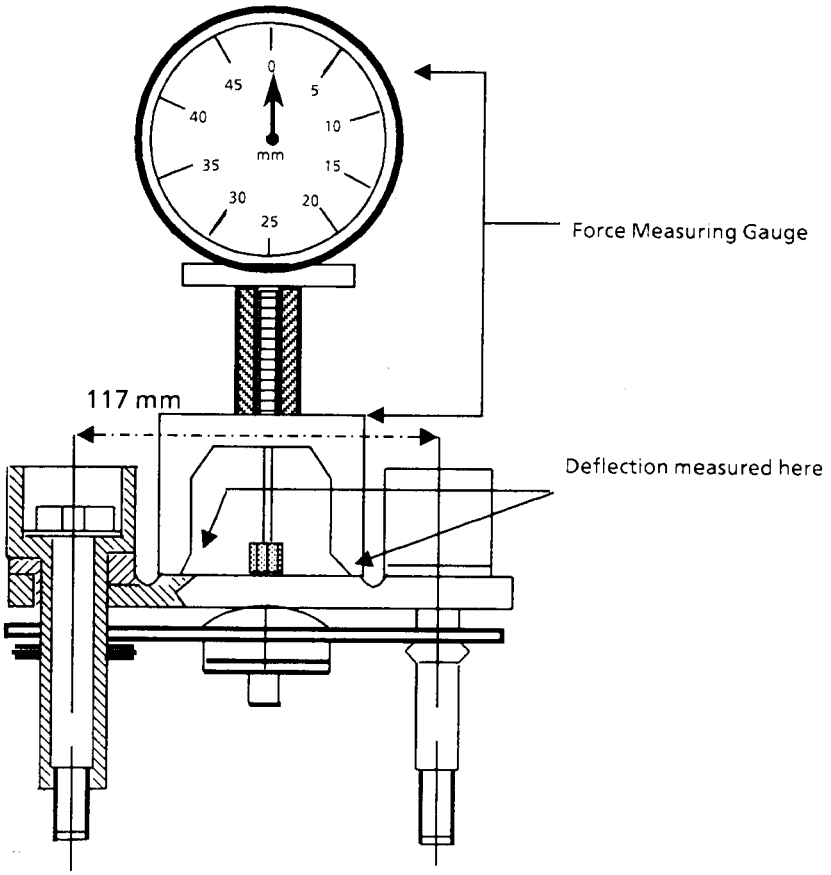

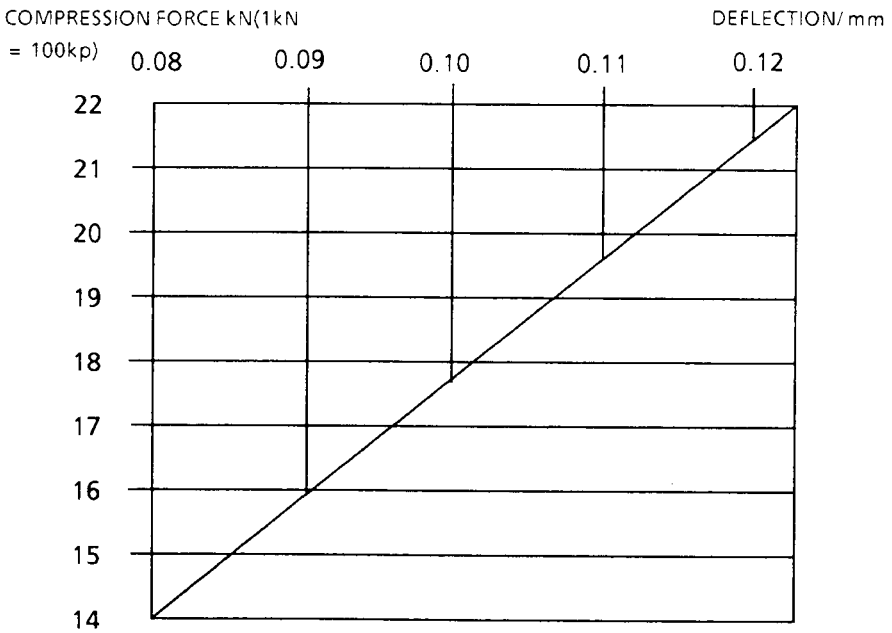

Figure 7- 6. Sketch of type SLZF 117A press clamp and its compression force vs. deflection of spring beam.

NOTE: A dial indicator with an 85 mm measuring distance must be used on the type SLZF 142 Press Clamp!

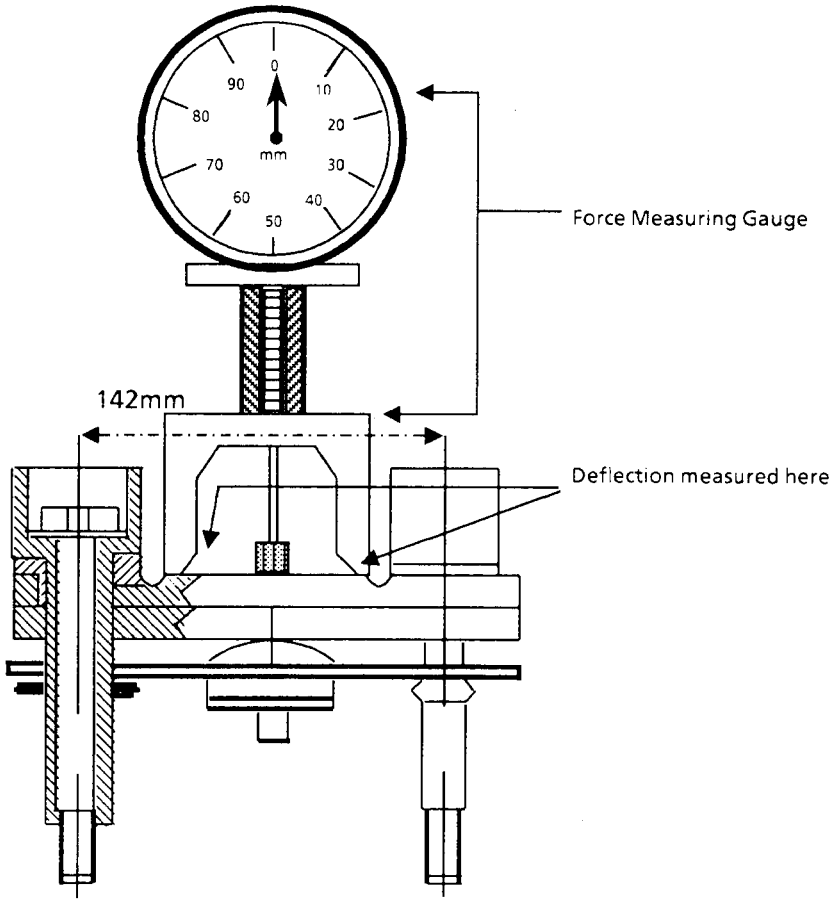

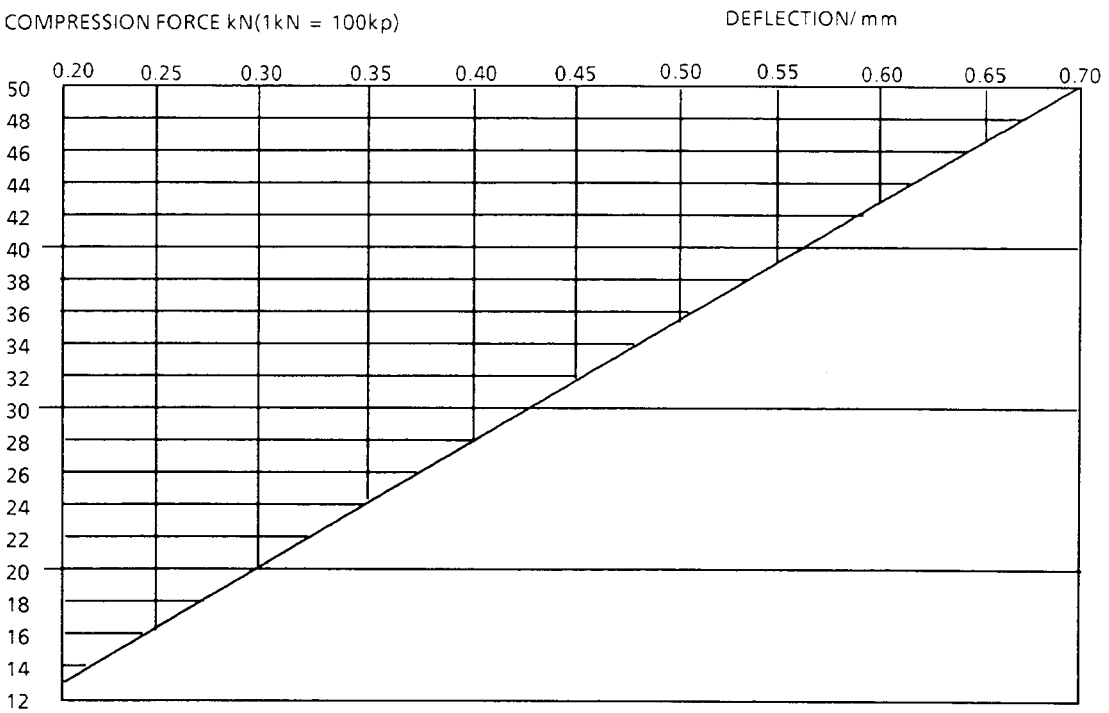

Figure 7-7. Sketch of type SLZF 142 press clamp and its compression force vs. deflection of spring beam.

7-6 Simulation Testing

7-6.1 **Setting Up a Simulation Circuit (GTR Units)** - Open the main disconnect, and check that all circuits are voltage free before proceeding. Move the jumper on the X-10 connector of the Power Supply Card (located behind the A1 Control Card on the hinged panel) from position A-B to A-C to provide simulated DC voltage measurement switching or on cards without an X-10 connector turn trimmer R84 clockwise 5 turns. (see Figure 3-30). Disconnect the X-6 connector on the A1 Contactor Control Card (LSU).

7-6.2 **Setting Up a Simulation Circuit (GTO Units)** - Open the main disconnect and check that all circuits are voltage free before proceeding. Disconnect the X-6 connector on the A1 Contactor Control Card (LSU).
Jumper the upper ends of resistors R94 and R95 on the auxiliary power supply card to provide simulated D.C. voltage measurement switching.
Jumper the right end of resistor R59 to the negative (-) pole of capacitor C188 on the main control card to provide short circuit simulated switching.
Jumper the positive pole (+) of control card capacitor C187 to pin 2C on the control card edge connector to provide simulated chopper undervoltage alarm.

7-6.3 **Simulation Circuit Start-Up** - After setting up the simulation circuit, close the circuit breakers and restore power to the unit with the main disconnect. The control panel should indicate that the drive is ready for operation. It is now possible to take measurements with an Oscilliscope, since the main circuit is disconnected. The 220 VAC and 20VAC required by the the inverter are now being formed by the T1 transformer.

WARNING: During the Oscilliscope measurements, extreme care must be excercised to avoid electrical shock, because all normal voltages with the exception of the main circuit are present in the inverter. 300V is present on the terminal strip card (INU A1) and the auxiliary voltage supply card (INU A9).

7- 6.4 **Circuit Board Testing**

7- 6.4.1 **Pulse Amplifier Board (SAFT 114 - 119 PAC/3500-A14-A19)**- Each pulse amplifier on the Pulse Amplifier board can be checked for correct operation using an Oscilliscope. With the unit in the simulation mode, connect the scope to the MPO common on the front edge of the channel specific amplifier circuit card (Figure 7-8) and to the the center wire terminal of the A4X2U connector on the pulse amplifier board.

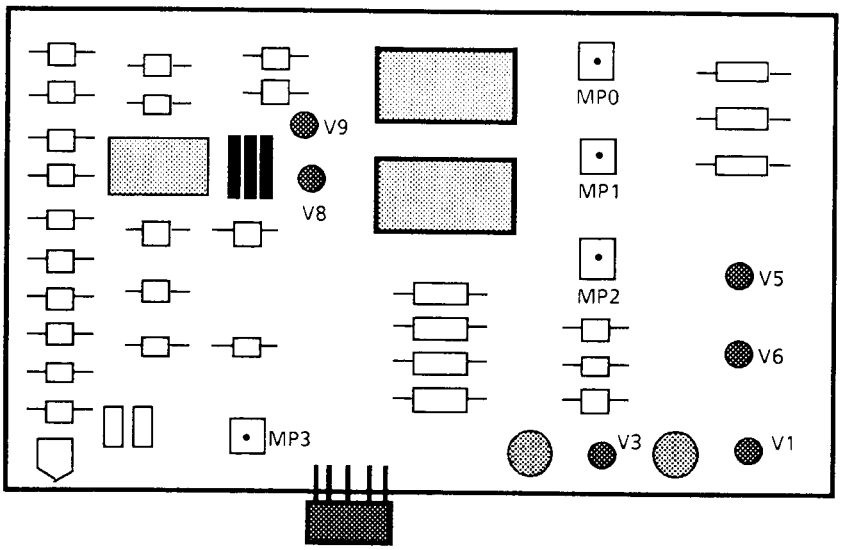

Figure 7-8. Channel Specific Amplifier Circuit Card

The turn-on, turn-off pulse should approximate the shape shown in Fig. 7-9. If the gate or firing pulse delivered to the transistor on any of the six channels is incorrect or does not exsist, the complete pulse amplifier board should be replaced.

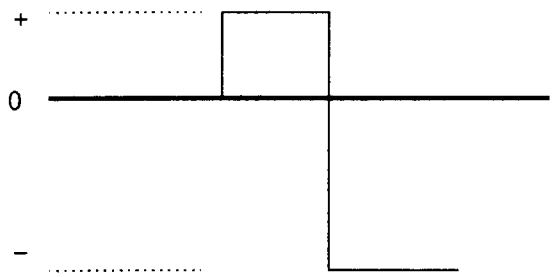

Pulse Amplifier	Rated Current	+ (Amps)	– (Amps)
SAFT 114 PAC	50	1.0	3.0
SAFT 115 PAC	75	1.0	3.0
SAFT 117 PAC	150	2.0	10.0
SAFT 118 PAC	200	3.0	10.0
SAFT 119 PAC	300	4.0	15.0

Figure 7-9. Pulse Amplifier Base Current Supply Performance Characteristics

When all simulation tests are completed, remove all jumpers and restore the switches and trim pots to their original settings. Trimmer R84 should be set to approximately 3V. This can be determined by measuring between the lower ends of capacitor C51 and resistor R14.

7-7 Changing Printed Circuit Boards

Bulletin 1352 Digital A.C. Drives feature printed circuit boards that require no adjustments as part of the normal troubleshooting and maintenance. This feature also helps simplify board replacement.

7-7.1 Circuit Board Replacement

- The following steps should be followed when changing the printed circuit boards:

CAUTION: ***The CMOS circuits utilized on the control circuit cards can be destroyed by static charges generated by friction of materials made of synthetic fibers. Use of faulty circuit cards may also damage related components. Observe proper care and recommended practices when handling circuit cards.***

A. Remove power by opening the disconnect switch and verify with a meter that all circuits are voltage free.

B. Carefully detach all ribbon cables , noting their location and orientation and whether the connectors were properly seated.

C. Remove the small metric mounting hardware with a screwdriver taking care not to drop any of the associated washers into the other circuits of the drive.

D. Lift out the circuit board in question, and check that the replacement board is correct before attempting installation. Install the new circuit board by replacing the mounting hardware and re-inserting the connectors and switches in their correct location on the new board.

NOTE: A grounded wrist strap should be used when replacing circuit boards to protect against static discharge damage to the boards !

Steps A thru D apply to replacement of all printed circuit boards in the Bulletin 1352 drive.

7-7.2 Control Card (SAFT 101 CON/ 3500 C01) Replacement

- In addition to the steps mentioned above, the Control Card (SAFT 101 CON/ 3500 C01) of the drive requires the additional transfer of the following components when changing cards:

IMPORTANT: Figures 3-19 and 3-30 may be helpful in identifying components.

A. Transfer the EEPROMS D17 and D18 to the corresponding locations on the new Control Card using an I.C. removal/ insertion tool for CMOS Circuits.

B. In order to retain the application software values, it will be necessary to transfer the EEPROM D16 to the new card.

IMPORTANT! If the new empty EEPROM is left in the control card, it is important that you observe item "D" when first reapplying power.

C. Transfer the matching card and it's spacers from the suspect board to the new control board by removing the four mounting screws from behind the card and re-installing them in the proper location on the new card. Be sure to attach the X-2 connector firmly into its socket and latch the connector tabs.

D. When reapplying power to the Bul. 1352 after installing a new control card, you must wait at least 2 minutes after the red L.E.D. on the control card lights before interrupting power or adjusting parameters. If you choose to use the new EEPROM (D16) which was supplied with the card, it can take as long as 3 or 4 minutes before the L.E.D. lights.

After the LED illuminates, it is safe to proceed with adjusting the parameter values and operating the drive.

7-8 Fault Table

For your convenience, the Fault Code Table is reprinted below. For a more complete description see Section 7-3.

Table 7-2 Fault Code Displays

CODE	FAULT MESSAGE
FL 01	CHOPPER UNDERVOLTAGE (GTO)
FL 02	CHOPPER OVERVOLTAGE (GTO)
FL03	AUXILIARY VOLTAGE FAILURE
FL 04	OVERTEMPERATURE
FL 05	OVERCURRENT
FL 06	DC OVERVOLTAGE
FL 07	DC UNDERVOLTAGE
FL 08	
FL 09	SEMICONDUCTOR FAULT UPPER LEG OF U -PHASE
FL10	SEMICONDUCTOR FAULT LOWER LEG OF U-PHASE
FL11	SEMICONDUCTOR FAULT UPPER LEG O V - PHASE
FL12	SEMICONDUCTOR FAULT LOWER LEG OF V - PHASE
FL13	SEMICONDUCTOR FAULT UPPER LEG OF W - PHASE
FL14	SEMICONDUCTOR FAULT LOWER LEG OF W - PHASE
FL15	SHORT CIRCUIT (GTO UNITS)
FL16	
FL17	SERIAL COMMUNICATION FAILURE
FL18	TACHOMETER FAILURE
FL19	CURRENT MEASUREMENT FAULT
FL20	
FL21	MATCHING CARD FAULT
FL23	PARAMETER VALUE TOO SMALL
FL24	PARAMETER VALUE TOO LARGE
FL25	FAULT INTERLOCK (Ground Fault Option)
FL26	FAULT INTERLOCK (Motor Overtemperature Option)
FL27	PARAMETER CHANGE NOT PERMITTED

RECOMMENDED SPARE PARTS

TABLE OF CONTENTS
Chapter 8
Recommended Spare Parts

SECTION		PAGE
8-1 : Diagnostic Monitoring		**1**
8-2 : Fault Codes		**2**
8-3 : AB/S		**6**
8-3.1	Printed Circuit Board & Electronic Assembly Cross Reference	6
8-3.2	Diode Rectifier & Rectifier Module Cross Reference	7
8-3.3	GTO & GTR Cross Reference	7
6-3.4	Circuit Board Fuse Cross Reference	8
8-3.5	Matching Cards	9
8-3.6	Dynamic Brake Unit Spares	9
8-3.7	Fan Unit Line Supply & Line Converter Modules	10
8-3.8	Fan Unit Inverter Modules	10
8-3.9	Fan Unit Capacitor Bank Units	10

Section

8

BULLETIN 1352 RECOMMENDED SPARE PARTS

8.1 GENERAL

Items in the following tables are recommended as spare stock to provide materials for use in fault tracing and repair Please note that items marked with a (1) are only necessary if the customer desires a more complete stock of spare components.

Customers are strongly encouraged to stock the recommended quantity of spare fuses for their particular drive rating.

8-2
SPARE PARTS LISTS

TABLE 8-2-A. Recommended Spares (30 KVA , 460 Volts)

A-B PART NO.	DESCRIPTION	QTY.	NOTE
116572	Fuses, Fast Acting Input 70 AMP 700 Volt	6	
501560	3500-CO1 CONTROL CARD	1	
501563	3500-PO6 POWER SUPPLY CARD	1	
501567	3500-A15 PULSE AMPLIFIER CARD (30 KVA)	1	1
501066	3500-CTS CONTACTOR UNIT CONTROL CARD (Series A)	1	1
501582	3500-T43 TERMINAL BLOCK CARD (SCALAR)	1	
501583	3500-APC AUXILIARY POWER CARD	1	1
501590	3500-H04 HALL EFFECT CURRENT TRANSDUCER	1	1
118926	DIODE MODULE LINE SUPPLY UNIT	2	1
501604	G.T.R. TRANSISTOR MODULE (2D175A-120)	2	1,2
501605	G.T.R. TRANSISTOR MODULE (QM75DY - 24)	2	1,2

TABLE 8-2-B. Recommended Spares (50 KVA , 460 Volts)

A-B PART NO.	DESCRIPTION	QTY.	NOTE
116572	Fuses, Fast Acting Input 70 AMP 700 Volt	6	
501560	3500-C01 CONTROL CARD (SCALAR)	1	
501563	3500-P06 POWER SUPPLY CARD	1	
501568	3500 - A17 PULSE AMPLIFIER CARD (50 KVA)	1	1
501066	3500 - CTS CONTACTOR UNIT CONTROL CARD (Series A)	1	1
501582	3500-T43 TBC TERMINAL BLOCK CARD (SCALAR)	1	
501583	3500- APC AUXILIARY POWER CARD	1	1
501590	3500-H04 HALL EFFECT CURRENT TRANSDUCER	1	1
118926	DIODE MODULE LINE SUPPLY UNIT	2	1
501606	G.T.R. TRANSISTOR MODULE (2DI150A-120)	2	1,2
501607	G.T.R. TRANSISTOR MODULE (QM150DY - 24)	2	1,2

1) Items are only needed if the customer desires a more complete stocking of spare components

2) Transistor Modules of different vendors have different physical dimensions for terminal locations. The vendor number should be verified when selecting replacement transistor modules. The performance characteristics of both transistor modules are compatible and both modules are readily available.

CAUTION: When replacing Circuit Boards, only boards with the same or higher revision level should be used to assure compatibility!

TABLE 8-2-C. Recommended Spares (75 KVA , 460 Volts)

A-B PART NO.	DESCRIPTION	QTY.	NOTE
116573	Fuses, Fast Acting Input 100 AMP 700 Volt	6	
501560	3500-CO1 CONTROL CARD	1	
501564	3500-PO7 POWER SUPPLY CARD	1	
501569	3500-A18 PULSE AMPLIFIER CARD (75 KVA)	1	1
501066	3500-CTS CONTACTOR UNIT CONTROL CARD (Series A)	1	1
501582	3500-T43 TERMINAL BLOCK CARD (SCALAR)	1	
501583	3500-APC AUXILIARY POWER CARD	1	1
501590	3500-H04 HALL EFFECT CURRENT TRANSDUCER	1	1
118926	DIODE MODULE LINE SUPPLY UNIT	2	1
501609	G.T.R. TRANSISTOR MODULE (1DI200A-120)	2	1,2
501608	G.T.R. TRANSISTOR MODULE (QM200HA - 24)	2	1,2

TABLE 8-2-D. Recommended Spares (115 KVA , 460 Volts)

A-B PART NO.	DESCRIPTION	QTY.	NOTE
113238	Fuses, Fast Acting Input 150 AMP 700 Volt	6	
501560	3500-C01 CONTROL CARD	1	
501564	3500-P07 POWER SUPPLY CARD	1	
501570	3500 - A19 PULSE AMPLIFIER CARD (115 KVA)	1	1
501066	3500 - CTS CONTACTOR UNIT CONTROL CARD (Series A)	1	1
501582	3500-T43 TBC TERMINAL BLOCK CARD (SCALAR)	1	
501583	3500- APC AUXILIARY POWER CARD	1	1
501590	3500-H04 HALL EFFECT CURRENT TRANSDUCER	1	1
118921	DIODE MODULE LINE SUPPLY UNIT	2	1
501610	G.T.R. TRANSISTOR MODULE (1DI300A-120)	2	1,2
501611	G.T.R. TRANSISTOR MODULE (QM300HA - 24)	2	1,2

1) Items are only needed if the customer desires a more complete stocking of spare components

2) Transistor Modules of different vendors have different physical dimensions for terminal locations. The vendor number should be verified when selecting replacement transistor modules. The performance characteristics of both transistor modules are compatible and both modules are readily available.

CAUTION: When replacing Circuit Boards, only boards with the same or higher revision level should be used to assure compatibility!

TABLE 8-2-E. Recommended Spares (180 KVA , 460 Volts)

A-B PART NO.	DESCRIPTION	QTY.	NOTE
104980	Fuses, Fast Acting Input 250 AMP 500 Volt	6	
117075	Fuse Fast Acting D.C. Bus 300 AMP 700 Volt	2	
501560	3500-CO1 CONTROL CARD	1	
501565	3500-PO10 POWER SUPPLY CARD	1	
501571	3500-A20 PULSE AMPLIFIER CARD (180 KVA)	1	1
501575	3500-CHC CHOPPER CONTROL CARD (500 Volt)	1	1
501066	3500-CTS CONTACTOR UNIT CONTROL CARD	1	1
501582	3500-T43 TERMINAL BLOCK CARD (SCALAR)	1	
501583	3500-APC AUXILIARY POWER CARD	1	1
501591	3500-H10 HALL EFFECT CURRENT TRANSDUCER	1	1
501660	Input Rectifier Diode Module Line Rectifier Unit	2	1,3
104772	FREE WHEELING DIODE INVERTER UNIT (G1,G2,G3)	2	1,3
501666	G.T.O. THYRISTOR INVERTER UNIT (G1,G2,G3)	2	1,3
501665	G.T.O. THYRISTOR CHOPPER (G1,G2,G3)	2	1,3
104832	FORCE MEASURING INDICATOR (TYPE SLZF)	1	1,3

TABLE 8-2-F. Recommended Spares (290 KVA , 460 Volts)

A-B PART NO.	DESCRIPTION	QTY.	NOTE
116586	Fuses, Fast Acting Input 400 AMP 500 Volt	6	
117076	Fuse Fast Acting D.C. Bus 450 AMP 700 Volt	2	
501560	3500-CO1 CONTROL CARD	1	
501565	3500-PO10 POWER SUPPLY CARD	1	
501572	3500-A21 PULSE AMPLIFIER CARD (290 KVA)	1	1
501575	3500-CHC CHOPPER CONTROL CARD (500 Volt)	1	1
501066	3500-CTS CONTACTOR UNIT CONTROL CARD	1	1
501582	3500-T43 TERMINAL BLOCK CARD (SCALAR)	1	
501583	3500-APC AUXILIARY POWER CARD	1	1
501591	3500-H10 HALL EFFECT CURRENT TRANSDUCER	1	1
501658	Input Rectifier Diode Module Line Rectifier Unit	2	1,3
501654	FREE WHEELING DIODE INVERTER UNIT (G1,G2,G3)	2	1,3
501667	G.T.O. THYRISTOR INVERTER UNIT (G1,G2,G3)	2	1,3
501665	G.T.O. THYRISTOR CHOPPER (G1,G2,G3)	2	1,3
104832	FORCE MEASURING INDICATOR (TYPE SLZF)	1	1,3

1) Items are only needed if the customer desires a more complete stocking of spare components

3) Puck type Diodes and G.T.O Thyristors of different vendors have different physical dimensions for terminal locations. The vendor number should be verified when selecting replacement components.

CAUTION: When replacing Circuit Boards, only boards with the same or higher revision level should be used to assure compatibility!

TABLE 8-2-G. Recommended Spares (460 KVA , 460 Volts)

A-B PART NO.	DESCRIPTION	QTY.	NOTE
104976	Fuses, Fast Acting Input 700 AMP 500 Volt	6	
118049	Fuse Fast Acting D.C. Link 400 AMP 700 Volt	2	
501560	3500-CO1 CONTROL CARD	1	
501566	3500-PO11 POWER SUPPLY CARD	1	
501573	3500-A22 PULSE AMPLIFIER CARD (460 KVA)	1	1
501575	3500-CHC CHOPPER CONTROL CARD (500 Volt)	1	1
501066	3500-CTS CONTACTOR UNIT CONTROL CARD	1	1
501582	3500-T43 TERMINAL BLOCK CARD (SCALAR)	1	
501583	3500-APC AUXILIARY POWER CARD	1	1
501592	3500-H25 HALL EFFECT CURRENT TRANSDUCER	1	1
104721	INPUT RECTIFIER DIODE (V51 - V56)	2	1,3
104719	FREE WHEELING DIODE INVERTER UNIT (V1 - V6)	2	1,3
501668	G.T.O. THYRISTOR INVERTER UNIT (V11 - V16)	2	1,3
501666	G.T.O. THYRISTOR CHOPPER (V17)	2	1,3
104832	FORCE MEASURING INDICATOR (TYPE SLZF)	1	1,3

TABLE 8-2-H Recommended Spares (730 KVA , 460 Volts)

A-B PART NO.	DESCRIPTION	QTY.	NOTE
502317	Fuses, Fast Acting Input 900 AMP 700 Volt	6	
502318	Fuse Fast Acting D.C. Bus 700 AMP 700 Volt	2	
501560	3500-CO1 CONTROL CARD	1	
501566	3500-PO11 POWER SUPPLY CARD	1	
501574	3500-A23 PULSE AMPLIFIER CARD (730 KVA)	1	1
501575	3500-CHC CHOPPER CONTROL CARD (500 Volt)	1	1
501066	3500-CTS CONTACTOR UNIT CONTROL CARD	1	1
501582	3500-T43 TERMINAL BLOCK CARD (SCALAR)	1	
501583	3500-APC AUXILIARY POWER CARD	1	1
501592	3500-H25 HALL EFFECT CURRENT TRANSDUCER	1	1
104721	INPUT RECTIFIER DIODE (V51 - V56)	2	1,3
501653	FREE WHEELING DIODE INVERTER UNIT (V1 - V6)	2	1,3
501669	G.T.O. THYRISTOR INVERTER UNIT (V11 - V16)	2	1,3
501667	G.T.O. THYRISTOR CHOPPER (V17)	2	1,3
104832	FORCE MEASURING INDICATOR (TYPE SLZF)	1	1,3

1) Items are only needed if the customer desires a more complete stocking of spare components

3) Puck type Diodes and G.T.O Thyristors of different vendors have different physical dimensions for terminal locations. The vendor number should be verified when selecting replacement components.

CAUTION: When replacing Circuit Boards, only boards with the same or higher revision level should be used to assure compatibility!

8.3
AB/S CATALOG NUMBERS

8-3.1 Bulletin 1352 Printed Circuit Boards and Electronic Assemblies Cross Reference and Where Used. -

BULLETIN	A-B NO.	DESCRIPTION	INVERTER K.V.A.							
			30	50	75	115	180	290	460	730
3500 - CP1	501067	CONTROL PANEL CP-1 (U.S.A.)	1	1	1	1	1	1	1	1
3500 - CP2		CONTROL PANEL CP-2	*	*	*	*	*	*	*	*
3500 - C01	501560	CONTROL CARD	1	1	1	1	1	1	1	1
3500 - C03	502979	CONTROL CARD	*	*	*	*	*	*	*	*
3500 - P06	501563	POWER SUPPLY CARD (30 & 50 KVA)	1	1						
3500 - P07	501564	POWER SUPPLY CARD (75 & 115 KVA)			1	1				
3500 - P10	501565	POWER SUPPLY CARD (180 - 460 KVA)					1	1	1	
3500 - P11	501566	POWER SUPPLY CARD (730 KVA)								1
3500 - A15	501567	PULSE AMPLIFIER CARD (30 KVA)	1							
3500 - A17	501568	PULSE AMPLIFIER CARD (50 KVA)		1						
3500 - A18	501569	PULSE AMPLIFIER CARD (75 KVA)			1					
3500 - A19	501570	PULSE AMPLIFIER CARD (115 KVA)				1				
3500 - A20	501571	PULSE AMPLIFIER CARD (180 KVA)					3			
3500 - A21	501572	PULSE AMPLIFIER CARD (290 KVA)						3		
3500 - A22	501573	PULSE AMPLIFIER CARD (460 KVA)							3	
3500 - A23	501574	PULSE AMPLIFIER CARD (730 KVA)								3
3500 - CHC	501575	CHOPPER CONTROL CARD (500 VOLT)					1	1	1	1
3500 - CBS	501576	CBU SUPERVISION CARD					1	1	1	2
3500 - S33	501577	SNUBBER CARD (.88 MFD/1500V)					1	1		
3500 - BRC	501578	CONTROL CARD (Braking Chopper)	*	*	*	*	*	*	*	*
3500 - CTS	501066	CONTACTOR UNIT CONTROL CARD #	1	1	1	1	1	1	1	1
3500 - S37	501579	SNUBBER CARD 0.44MFD 1000V								
3500 - S38	501580	SNUBBER CARD 0.66MFD 1500V								
3500 - S39	501581	SNUBBER CARD 1.32MFD 1500V							1	
3500 - T43	501582	TERMINAL BLOCK CARD (SCALAR)	1	1	1	1	1	1	1	1
3500 - APC	501583	AUXILIARY POWER CARD	1	1	1	1	1	1	1	1
3500 - AC1	501584	A.C. CONNECTION CARD (115 VAC)	*	*	*	*	*	*	*	*
3500 - FOC	501585	FIBER - OPTIC CONNECTION CARD	*	*	*	*	*	*	*	*
3500 - INP	501586	INPUT CARD	*	*	*	*	*	*	*	*
3500 - TSI	501587	TACHO & SERIAL INTERFACE CARD	*	*	*	*	*	*	*	*
3500 - OCC	501834	OPTION CARD RIBBON CABLE	*	*	*	*	*	*	*	*
3500 - CPD	501588	CONTROL PANEL DISPLAY CARD	1	1	1	1	1	1	1	1
3500 - AC2	501589	A.C. CONNECTION CARD (220 VAC)	*	*	*	*	*	*	*	*
3500 - H04	501590	CURRENT TRANSDUCER 400 A	2	2	2	2				
3500 - H10	501591	CURRENT TRANSDUCER 1000A					3	3		
3500 - H25	501592	CURRENT TRANSDUCER 2500A							3	3
3500 - NA1	502470	PLC INTERFACE MODULE (1771 - NA)	*	*	*	*	*	*	*	*

Series A

* Denotes Options

8-3.2 Diode Rectifiers & Rectifier Modules Cross Reference -

TYPE.	A-B NO.	DESCRIPTION	K.V.A.							
			30	50	75	115	180	290	460	730
LSU	118926	IRKD 71 - 16 I.R./USA	3	3	3					
LSU	118291	DD151N 1600 AEG-TELEF/GERMANY				3	3			
LCU	501658	IRKD 240-16 I.R./USA						3		
LCU	104721	G1552PDE I.R/G. BRIT.							6	6
INU	104722	SM13CXC174 WESTCODE/GR. BRIT.*					6			
INU	501654	SM16CXC190 WESTCODE/GR. BRIT.*						6		
INU	104719	SM18CXC805PW WESTCODE/GR. BRIT.*							6	
INU	501653	SM18CXC924/YP WESTCODE/GR. BRIT.*								6
Snubber Diode	501656	DSD35-16A BBC/CH					4	4	7	10
Snubber Diode	501652	DSDI35 - 16A BBC/CH					5	5	8	12
Snubber Diode	104724	SM12PCN074 WESTCODE/GR. BRIT.	1	1	1	1	1	1	1	1
Snubber Diode	501655	SM12PCRO74 WESTCODE/GR. BRIT.	1	1	1	1				

8-3.3 GTO & GTR Cross Reference -

TYPE	A-B NO.	DESCRIPTION	INVERTER K.V.A.							
			30	50	75	115	180	290	460	730
GTR	501604	2D175A - 120 FUJI/JAPAN	3							
		>or<								
GTR	501605	QM75DY-24 MITSUBISHI/JAPAN	3							
GTR	501606	2D175A-120 FUJI/JAPAN		3						
		>or<								
GTR	501607	QM75DY-24 MITSUBISHI/JAPAN		3						
GTR	501608	QM200HA-24 MITSUBISHI/JAPAN			6					
		>or<								
GTR	501609	IDI200A - 120 FUJI/JAPAN			6					
GTR	501610	IDI300A - 120 FUJI/JAPAN				6				
		>or<								
GTR	501611	QM300HA - 24 MITSUBISHI/JAPAN				6				
GTO*	501665	S6475R TOSHIBA/JAPAN					1	1		
GTO*	501666	S6476R TOSHIBA/JAPAN					6		1	
		FG600 AL-26 MITSUBISHI/JAPAN					6		1	
GTO*	501667	S6425R TOSHIBA/JAPAN						6		1
		FG1000 AL - 26 MITSUBISHI/JAPAN						6		1
GTO*	501668	S6426R TOSHIBA/JAPAN							6	
GTO*	501669	S6427R TOSHIBA/JAPAN								6

* NOTE: Use Penetrox A, or G.E. Silicon Grease Tube # G 322L when mounting.
See Section 7-5 for correct replacement technique of GTOs and GTRs.

8-3.4 Circuit Board Fuses (Glass Tube) Cross Reference

A-B NO.	BOARD TYPE	FUSE #	FUSE RATING		
501661	3500 - P06	F1	1.0A	500V	5 X 30 mm
501662	Power	F2	2.5A	250V	5 X 20 mm
501109	Supply	F3	1.0A	250V	5 X 20 mm
501109	Card	F4	1.0A	250V	5 X 20 mm
501109		F5	1.0A	250V	5 X 20 mm
501662		F6	2.5A	250V	5 X 20 mm
501109		F7	1.0A	250V	5 X 20 mm
501109		F8	1.0A	250V	5 X 20 mm
501661	3500 - P07	F1	1.0A	500V	5 X 30 mm
501102	Power	F2	4.0A	250V	5 X 20 mm
501662	Supply	F3	2.5A	250V	5 X 20 mm
501662	Card	F4	2.5A	250V	5 X 20 mm
501662		F5	2.5A	250V	5 X 20 mm
501662		F6	2.5A	250V	5 X 20 mm
501109		F7	1.0A	250V	5 X 20 mm
501109		F8	1.0A	250V	5 X 20 mm
501663	3500 - P10	F1	1.0 A	1200V	8.3 X 50 mm
501109	Power	F2	1.0A	250V	5 X 20 mm
501102	Supply	F3	4.0A	250V	5 X 20 mm
501109	Card	F4	1.0A	250V	5 X 20 mm
501663	3500 - P11	F1	1.0 A	1200V	8.3 X 50 mm
501109	Power	F2	1.0A	250V	5 X 20 mm
501102	Supply	F3	4.0A	250V	5 X 20 mm
501109	Card	F4	1.0A	250V	5 X 20 mm
501663	3500 - P12	F1	1.0 A	1200V	8.3 X 50 mm
501109	Power	F2	1.0A	250V	5 X 20 mm
501102	Supply	F3	4.0A	250V	5 X 20 mm
501109	Card	F4	1.0A	250V	5 X 20 mm
501663	3500 - P13	F1	1.0 A	1200V	8.3 X 50 mm
501109	Power	F2	1.0A	250V	5 X 20 mm
501102	Supply	F3	4.0A	250V	5 X 20 mm
501109	Card	F4	1.0A	250V	5 X 20 mm
501662	3500 - A20	F1	2.5A	250V	5 X 20 mm
501662	Pulse Amp.	F2	2.5A	250V	5 X 20 mm
501662	3500 - A21	F1	2.5A	250V	5 X 20 mm
501662	Pulse Amp.	F2	2.5A	250V	5 X 20 mm
501102	3500 - A22	F1	4.0A	250V	5 X 20 mm
501102	Pulse Amp.	F2	4.0A	250V	5 X 20 mm
501664	3500 - A23	F1	6.3A	250V	5 X 20 mm
501664	Pulse Amp.	F2	6.3A	250V	5 X 20 mm
501662	3500 - CHC	F1	2.5A	250V	5 X 20 mm
501662	3500 - T43	F1	2.5A	250V	5 X 20 mm
501662	3500 - TSI	F1	2.5A	250V	5 X 20 mm
501662		F2	2.5A	250V	5 X 20 mm

8-3.5 Matching Cards -

BULLETIN	A-B NO.	DESCRIPTION
3501 - 030	501619	30 KVA "460 Volt" INVERTER MATCHING CARD
3501 - 051	501593	50 KVA "460 Volt" INVERTER MATCHING CARD
3501 - 075	501594	75 KVA "460 Volt" INVERTER MATCHING CARD
3501 - 115	501595	115 KVA "460 Volt" INVERTER MATCHING CARD
3501 - 180	501596	180 KVA "460 Volt" INVERTER MATCHING CARD
3501 - 290	501597	290 KVA "460 Volt" INVERTER MATCHING CARD
3501 - 460	501598	460 KVA "460 Volt" INVERTER MATCHING CARD
3501 - 730	501599	730 KVA "460 Volt" INVERTER MATCHING CARD
3502 - 180	501600	180 KVA "460 Volt" LINE GEN. MATCHING CARD
3502 - 290	501601	290 KVA "460 Volt" LINE GEN. MATCHING CARD
3502 - 460	501602	460 KVA "460 Volt" LINE GEN. MATCHING CARD
3502 - 730	501603	730 KVA "460 Volt" LINE GEN. MATCHING CARD

8-3.6 Dynamic Brake Unit Spares -

BULLETIN	A-B NO.	DESCRIPTION
3500 - BRC	501578	Control Card (Braking Chopper)
		75 KW Semiconductors
	501665	GTO - "V1" *
	501655	Aux. Diode "V2" *
	104724	Aux. Diode "V3" *
		115 KW Semiconductors
	501666	GTO - "V1" *
	501655	Aux. Diode "V2" *
	104724	Aux. Diode "V3" *
		180 KW Semiconductors
	501667	GTO - "V1" *
	501655	Aux Diode "V2" *
	104724	Aux. Diode "V3" *

* NOTE: Use Penetrox A, or G.E. Silicon Grease Tube # G 322L when mounting.
See Section 7-5 for correct replacement technique of GTOs and GTRs.

8-3.7 Fan Units , Line Supply & Line Converter Modules -

A-B NO.	DESCRIPTION	K.V.A.							
		30	50	75	115	180	290	460	730
118327	TN3A2 ROTRON			1[B]	1[B]				
503208	W2S107 - AA01 ZEIHL			1[A]					
503209	W2E 142-B8 01-01 ZEIHL				1[A]				
503210	TN3A3 ROTRON					1			
503211	7.5V WOODS						1	1	1

* NOTES: A - Series A only
B - Series B only

8-3.8 Fan Units , Inverter Modules -

A-B NO.	DESCRIPTION	K.V.A.							
		30	50	75	115	180	290	460	730
503208	W2S107 - AA01	1							
503209	W2E142 - B8 01-01 ZEIHL		1	1					
503210	TN3A3 ROTRON				2				
503211	7.5V WOODS					1			
503212	9.5V WOODS						1		
503213	9.5KG /60Hz WOODS							1	
503215	12V / 60Hz WOODS								1

8-3.9 Fan Units , Capacitor Bank Units -

A-B NO.	DESCRIPTION	K.V.A.							
		30	50	75	115	180	290	460	730
503209	W2E142 - B8 01-01 ZEIHL						1	2	3

REFERENCE DOCUMENTS

TABLE OF CONTENTS
Chapter 9
Reference Documents

SECTION		PAGE
9-1 : Drive Firmware Parameters		**1**
9-2 : Drive Software Application Programming		**21**
9-2.1	Programming	21
9-2.2	Display Blocks	23
9-2.2.1	Display 0, CP1	23
9-2.2.2	Display 1,2,3,4, CP1	24
9-2.2.3	Special Display	25
9-2.2.4	CP1 Diagnostic Display	26
9-2.3	Functional Blocks	27
9-2.3.1	General	27
9-2.3.2	NOT	28
9-2.3.3	2 INPUT OR	29
9-2.3.4	2 INPUT AND	29
9-2.3.5	SR FLIP-FLOP	30
9-2.3.6	JK FLIP-FLOP	30
9-2.3.7	2-INPUT ADDER	31
9-2.3.8	2-INPUT MULTIPLIER	31
9-2.3.9	SCALE	32
9-2.3.10	ABS	32
9-2.3.11	MAX/MIN SELECTOR	33
9-2.3.12	ONE of TWO SELECTOR	33
9-2.3.13	COMPARATOR	34
9-2.3.14	DELAY	35
9-2.3.15	NUMERICAL LIMITER	36
9-2.3.16	PFC	37
9-2.3.17	FILTER	38
9-2.3.18	INTEGRATOR	38
9-2.3.19	PI-CONTROLLER	39
9-2.3.20	UP/DOWN COUNTER	40
9-2.3.21	DIGITAL INPUT	41
9-2.3.22	ANALOG INPUTS	42
9-2.3.23	ANALOG OUTPUTS	43
9-2.3.24	DIGITAL OUTPUTS 0	44
9-2.3.25	DIGITAL OUTPUTS 1	45
9-2.3.26	SCALAR	46
9-2.3.27	CP1 BUTTONS	48
9-2.3.28	TRANSFER0	49
9-2.3.29	CONSTANT0	50
9-2.3.30	CP2 BUTTONS	51
9-2.3.31	CP2 ADDER	52
9-2.3.32	CP2 DISPLAYS	53
9-2.3.33	CP2 DIGITAL INPUTS	54
9-2.3.34	CP2 ANALOG INPUT	55
9-2.3.35	CP2 DIGITAL OUTPUTS	56
9-2.3.36	SERIAL COMM CONNECTION	57
9-2.3.37	SERIAL OUTPUT 1	58
9-2.3.38	SERIAL OUTPUT 2	59
9-2.3.39	UNPACK	60
9-3	**1352 Startup Record & Checklist**	**61**

Chapter

9

BULLETIN 1352 REFERENCE DOCUMENTS

9-1 Drive Firmware Parameters

Several Drive Operational Data Points and Adjustments are organized into a parameter table. The table also brings together "measurement points" such as instantaneous current values and controller outputs (See Table 9-1).

The table is located in the RAM memory of the inverter control card and the significant parameters can be stored in the EEPROM memory in which the data is preserved in the event of power interruption. Storage takes place by setting EEROMLOCK (Parameter #8) to a value other than zero for at least two minutes.

The Table is divided into the following designations:

TYPE = If the value is only maintained in RAM memory, and won't be maintained in the event of a power failure, it is designated with a T. If the value is stored in EEPROM, a TEE is the designator.

D = The address as a decimal number.

H = The address as a hexadecimal number.

MAXIMUM = Is the maximum value that can be given to this parameter. The program will not accept a number that is larger than this value, but reports to the control panel that the parameter is too large. If a value is not supplied in the table the maximum is +32767.

MINIMUM = Is the minimum value that can be given to this parameter. If the number is smaller or on the negative side of this value, the control panel will receive a parameter too small indication. If a value is not supplied in the table, the minimum is -32678. If both the maximum and minimum limits are 0, it is not possible to set parameters. If an attempt to set a parameter with 0 limits is made, FL27 "BAD PARAMETER" will be sent to the control panel.

DEFAULT = A 0 value given to an empty EEPROM

EXPLANATION = If no explanation of operation is given, the address has no meaning in this program revision.

Table 9-1. Main Parameter Categories

MAIN CATEGORY	ADDRESS	MAIN CATEGORY	ADDRESS
Operation Control	1 - 25	SAFT 143 TBC Inputs & Outputs	245 - 255
Reference Values	26 - 31	Scalar Control 3	256 - 327
Display Registers (CP : T)	32 - 47	EPROM Revision Data	328 - 350
External Control	48 - 97	Active Current Limiting Control	351 - 359
Display Scaling (CP : t)	98 - 111	UC Control & Stabilization	360 - 389
Serial Communication Channel 1	112 - 129	Control Limits	390 - 412
Serial Communication Channel 2	130 - 151	Outputs of Stabilizers	418 - 427
Scalar Control 2	152 - 175	Controller Flags	428 - 443
Diagnostics	176 - 200	Scalar Control 4	444 - 458
Actual Values	201 - 209	Reserved (Future Use)	460 - 499
Logic Information From Inverter	210 - 215	Trend Buffer Data	500 - 1299
Measuring Points	218 - 244	Program Sequence Table	1800 - 1900

9-1.1
Operational Control

HEX	D	TYPE	MIN	MAX	DEFAULT	EXPLANATION
001	1	T				DATABLOCK1. Data is transmitted to this address from SELMA, the PLC Interface Module or DMS. The Address can then be used as an input of a function block.
002	2	T				START Start-up request. A value < > 0 starts the drive to a frequency determined by parm 29T. Automatic reset
003	3	T				STOP Stop Request. A value < > 0 initiates a ramp stop. Automatic reset.
004	4	T				DATABLOCK1. Same as 1T
005	5	T				DATABLOCK2. Same as 1T
006	6	T				DATABLOCK3. Same as 1T
008	8	T			1	EEROMLOCK. When < or > 0 parameters are automatically saved in EEPROM.
009	9	TEE				TBCTRANSMIT1. Control word that defines the transmitting intervals of I/O inputs of SAFT143TBC.
00A	10	TEE			1	TBCTRANSMIT2. Same as 9TEE.
00C	12	T				RESET. Fault Reset. When < or > 0, faults are reset. Automatic reset
00E	14	T	0	255		CP2 ANALOG. CP2 transmits its analog signal to address. This signal can be connected to the input of a functional block.
013	19	T				CP1 BUTTONS. SAFT 143 TBC transmits CP1 data to this address as packed bit coded information. This info will be decoded in functional blocks into discrete addresses.
014	20	T				SELMASTOPC This counter increments by one for each stop request that is received thru serial channel (Parameter 3T)
015	21	T				DRIVESTOPC This counter increments by one for each inverter caused stop. (For Example: a stop caused by a fault).
016	22	T				COAST STOP. Stop Command Automatic Reset
017	23	T				BUTTONSWORD. Pushbutton data of CP2 as bit coded and packed information.
018	24	T				START 1 P. Start request. Same as T2, but starts to frequency 161TEE
019	25	T				START 2 P. Start request. Same as T2, but starts to frequency 162TEE

9-1.2 Reference Values

HEX	D	TYPE	MIN	MAX	DEFAULT	EXPLANATION
01D	29	T	-20000	20000		FREQREF. Signed frequency frequency reference in .01Hz. 1000 = 10 Hz
01E	30	T	-1000	1000		DELTASPREF CP2 transmits a number to this address that will be added to old parameter 29T. The parameter is set to zero automatically
01F	31	T	-1000	1000		DELTASPREF1. CP2 transmits a number to this address that will be added in this block. After addition, 31 is automatically set to zero

9-1.3 Display Registers

HEX	D	TYPE	MIN	MAX	DEFAULT	EXPLANATION
020	32	T			0	Reserved for display message addresses between control panels and the inverter.
021	33	T			0	Reserved for display message addresses between control panels and the inverter.
022	34	T			0	Reserved for display message addresses between control panels and the inverter.
023	35	T			0	Reserved for display message addresses between control panels and the inverter.
024	36	T			0	Reserved for display message addresses between control panels and the inverter.
025	37	T			0	Reserved for display message addresses between control panels and the inverter.
026	38	T			0	Reserved for display message addresses between control panels and the inverter.
027	39	T			0	Reserved for display message addresses between control panels and the inverter.
028	40	T			0	Reserved for display message addresses between control panels and the inverter.
029	41	T			0	Reserved for display message addresses between control panels and the inverter.
02A	42	T			0	Reserved for display message addresses between control panels and the inverter.
02B	43	T			0	Reserved for display message addresses between control panels and the inverter.
02C	44	T			0	Reserved for display message addresses between control panels and the inverter.
02D	45	T			0	Reserved for display message addresses between control panels and the inverter.
02E	46	T				DATABLOCK4. Same as 1T
02F	47	T				DATABLOCK5. Same as 1T

9-1.4
External Control

HEX	D	TYPE	MIN	MAX	DEFAULT	EXPLANATION
03E	62	TEE	-20000	20000	6000	FREQMAX. Maximum limit of frequency reference in .01Hz.
03F	63	TEE	-20000	20000	-6000	FREQMIN. Minimum limit of frequency reference in .01Hz.
040	64	TEE	0	3600	20	FREQINTACC. Ramp Time of frequency from 0 to +/- 100 Hz in seconds.
041	65	TEE	0	3600	1	FREQDECSTOP. Decel time of freq. ref. from +/- 100Hz. to 0 in seconds when a fault or 22T has stopped the drive.
042	66	TEE	0	32767	20	FREQINTDEC. Decel time of freq. ref. from +/- 100Hz. to 0 in seconds when the drive has been stopped by 3T, or 29T is changing.
043	67	TEE	0	100	100	MAX OUTPUT VOLTAGE. Maximum voltage in the output of the inverter in % of rated voltage.
044	68	TEE	0	20000	5250	FIELDWEAKPNT. Field weakening point in .01Hz The frequency at which the output value 67TEE, when the DC voltage is at its rated value. Defines the V/Hz. value in conjunction with parameter 67TEE
045	69	TEE	0	3500	1000	IRCOMPPOINT. The frequency (in .01 Hz.), at which the effect of IR compensation ends.
046	70	TEE	0	300	0	IRCOMPLEVEL. The additional boost of IR comp. in .1 percent of rated voltage at 0 frequency
04F	79	TEE	50	2000	1000	IREMAX. The motoring torque limit in .1 %of the nominal motor of the drive. When actual torque 201T surpasses this value, the limiting controller begins to operate and by controlling the frequency ref., maintains the torque within limit. (1000 = 72% of Inverter total current rating)
050	80	TEE	-2000	-1	-20	IREMIN. The generatoring torque limit in .1 % of max torque of the nominal motor of the drive. (-1000 = 72% of Inverter total current rating)
052	82	TEE	0	2000	800	STALLFREQ. The maximum operation frequency stall protection in .01Hz.
053	83	TEE	0	100	10	STALLTIME. The operating time of stall protection in seconds
054	84	TEE	0	32000	0	FSLIPSCALE. Slip compensation scaling. The slip compensation is used to correct the frequency so that the real rotational speed of the motor corresponds to the frequency reference.
055	85	TEE	0	2000	800	IOHJE. Total current limit in low frequency IR compensation (boost) in .1% of the inverter rated current.
05A	90	TEE	0	180	180	TIMEMAX After start-up, the maximum time that IR compensation is active.

9-1.5
Display ScalingFor CP-2

HEX	D	TYPE	MIN	MAX	DEFAULT	EXPLANATION
063	99	TEE			0	SIGN When < or > than 0, this parameter inverts the sign for the left and middle displays.
064	100	TEE	1	32000	1	DISP0MUL Scaling Multiplier of left display.
065	101	TEE	0	32000	2	DISP0DIV Scaling divider of left display
066	102	TEE	0	3	2	DISP0PNT The number of decimals in the left display
067	103	TEE		2000	29	DISP0SRC. The address of the variable in the left display
068	104	TEE	1	32000	1	DISP1MUL. Scaling multiplier of middle display
069	105	TEE	1	32000	1	DIS1DIV. Scaling divider of middle display
06A	106	TEE	0	3	2	DISP1PNT. Number of decimals in middle display.
06B	107	TEE	0	2000	208	DISP1SRC. Address of the variable in the left display.
06C	108	TEE	1	32000	1	DISP2MUL. Scaling multiplier for right display.
06D	109	TEE	1	32000	1	DISP2DIV. Scaling divider of right display.
06E	110	TEE	0	3	1	DISP2PNT. Number of decimals in right display
06F	111	TEE	0	2000	205	DISP2SRC. Variable address of right display.

9-1.6
Serial Communications
Channel 1 -

HEX	D	TYPE	MIN	MAX	DEFAULT	EXPLANATION
070	112	T	0	2000		Address requested parameter
071	113	T				When the number of the requested parameter is transmitted thru serial channel to 112, DAC will send the data within 50ms using address 113. If data is being sent thru serial channel to 113, DAC will update it to the parameter appointed by the address in 112.
072	114	TEE	0	32000	5	INTERVAL0 Sets the interval rate in 20ms periods for the first recurring message to be transmitted using channel 1.
073	115	TEE	0	2000	247	INTEX0. Stores the parameter number which data will be taken from for the first recurring message to be transmitted using channel 1. This becomes the data portion of the SAMI message. The parameter number stored in param. 115 becomes the address portion of the SAMI message.
074	116	TEE	0	32000	4	INTERVAL1. Same as TEE114, but for second message.
075	117	TEE	0	2000	248	INDEX1 Same as TEE115, but for second message.
076	118	TEE	0	32000	4	INTERVAL2. Same as TEE114 but for third message.
077	119	TEE	0	2000	249	INDEX 2 Same as TEE115, but for third message.
078	120	TEE	0	32000	0	INTERVAL3 Same as TEE114, but for fourth message.
079	121	TEE	0	2000	0	INDEX3 Same as TEE115, but for fourth message.
07A	122	TEE	0	32000	0	INTERVAL4 Same as TEE114, but for fifth message.
07B	123	TEE	0	2000	0	INDEX4 Same as TEE115, but for fifth message.
07C	124	TEE	0	32000	0	INTERVAL5 Same as TEE114, but for sixth message.
07D	125	TEE	0	2000	0	INDEX5 Same as TEE115, but for sixth message.
07E	126	TEE	0	32000	0	INTERVAL6 Same as TEE114, but for seventh message.
07F	127	TEE	0	2000	0	INDEX6 Same as TEE115, but for seventh message.
080	128	TEE	0	32000	0	INTERVAL7 Same as TEE114, but for eighth message.
081	129	TEE	0	2000	0	INDEX7 Same as TEE115, but for eighth message.

9-1.7
Serial Communications
Channel 2

HEX	D	TYPE	MIN	MAX	DEFAULT	EXPLANATION
082	130	TEE	0	32000	4	NORMALMSGE Sets the update interval in 100ms increments for normal message sent to the CP2.
083	131	TEE	0	32000	20	DIAGNMSGE. Sets the update interval in 100ms increments for diagnostic messages sent to CP2
086	134	TEE	0	32000	0	INTERVAL2. Sets the interval rate in 20ms periods for the first recurring message to be transmitted from the lead DDC using channel 2.
087	135	TEE	0	2000	0	INDEX2. Stores data taken from the first recurring message transmitted from the DAC using channel 2. This becomes the data portion of the SAMI message. The parameter number stored in parameter 115 becomes the address portion of the SAMI message.
088	136	TEE	0	32000	50	INTERVAL 12 SAME as TEE134, but for 2nd message.
089	137	TEE	0	2000	214	INDEX12. Same as TEE135, but for 2nd message.
08A	138	TEE	0	32000	0	INTERVAL22 Same as TEE134, but for 3rd message.
08B	139	TEE	0	2000	0	INDEX22 Same as TEE135 but for third message.
08C	140	TEE	0	32000	0	INTERVAL32 Same as TEE134, but for 4th message.
08D	141	TEE	0	2000	0	INDEX32 Same as TEE135, but for 4th message.
08E	142	TEE	0	32000	0	INTERVAL 42 Same as TEE134, but for 5th message.
08F	143	TEE	0	2000	0	INDEX42 Same as TEE135, but for 5th message.
090	144	TEE	0	32000	0	INTERVAL52 Same as TEE134, but for 6th message.
091	145	TEE	0	2000	0	INDEX52 Same as TEE135 but for 6th message.
092	146	TEE	0	32000	0	INTERVAL62 Same as TEE134, but for 7th message.
093	147	TEE	0	2000	0	INDEX62 Stores data taken from the seventh recurring message transmitted from the DAC using channel two. This data becomes the data portion of the SAMI message.
094	148	TEE	0	255	0	IXS62. Stores as its data the address to which the seventh message will be transmitted
095	149	TEE	0	32000	0	IVAL 72
096	150	TEE	0	2000	0	IX72
097	151	TEE	0	255	0	IXS72. Same as 148TEE.

9-1.8
Scalar Control 2

HEX	D	TYPE	MIN	MAX	DEFAULT	EXPLANATION
09D	157	TEE	0	32000	0	COMM TIMEOUT2. Sets the time in 20ms intervals for the DAC delay period. (Amount of time the DAC will wait after detection of a communication loss in Channel 2 before responding.)
09E	158	TEE	0	10	3	CHARGETIME. Chopper GTO-Inverter charging time in 200 ms units.
0A2	162	TEE	-20000	20000		SPEED2. The frequency in .01Hz. units which the drive will go to on START2 (parm. 25T).
0A1	161	TEE	-20000	20000	4000	SPEED1. The frequency in .01Hz. units which the drive will go to on START1 (parm. 24T).
0A4	164	T	0	10	0	MASTERSLAVE. Serial channel two mode.
0AA	170	TEE	110	4800	4800	CH2BAUDRATE. The baud rate of serial channel 2. Baud rate can be set as follows 1. Set 8 = 1 2. Set the desired baud rate to 170TEE 3. Wait for two minutes 4. Turn off the power for 10 seconds and then turn it back on.
0AB	171	TEE	0	3	0	SELMACONT. Determines the action to be taken by DAC once communication loss has been detected for the period of time defined by COMM TIMEOUT 1 and COMM TIMEOUT 2 0 = no action 1 = report 2 = report and ramp stop 3 = report and coast stop.
0AC	172	TEE	0	32000		COMM TIMEOUT 1. Determines the time in 20ms intervals that the DAC will wait after detecting a communication loss in channel 1, before responding to the communication loss.

9-1.9
Diagnostics

HEX	D	TYPE	MIN	MAX	DEFAULT	EXPLANATION
0B0	176	T				FLT QUEUE. Contains a fault code representing the first DAC fault which has occurred.
0B1	177	T				FLT2 contains a fault code representing the second DAC fault which has occurred.
0B2	178	T				FLT3 contains a fault code representing the third DAC fault which has occurred.
0B3	179	T				FLT4 contains a fault code representing the fourth DAC fault which has occurred.
0B4	180	T				FLT5 contains a fault code representing the fifth DAC fault which has occurred.
0B5	181	T				FLT6 contains a fault code representing the sixth DAC fault which has occurred.
0B6	182	T				OKMSGES1. Contains a number representing the number of valid SAMI messages received on one channel.
0B7	183	T				FAULTMSGES1 Contains a number representing the number of erroneous SAMI messages received on channel one.
0B8	184	T				OKMSGES2 Same as T182, but for channel 2.
0B9	185	T				FAULTMSGES2 Same as T183, but for channel 2.
0BA	186	TEE			1	D A1REFADR. Stores the parameter number which data will be taken from for the input to the inverting input of the first D-A converter.
0BB	187	TEE			201	D A1ADR. Stores the parameter number which data will be taken from for the input to the noninverting input of the first D-A converter.
0BC	188	TEE			4	D A1SCALA. Sets the scaling factor for the outputs of the first D-A converter.
0BD	189	TEE			1	D A1MODE. The operating mode of D-A converter.
0BE	190	TEE	0	500	500	CURRENTOFFSET. The maximum value of the current measuring error in .1 percent of the peak value of the current fundamental. If the error is greater than this limit, the inverter will not start, but reports 'I MEAS FAULT or FL 19'.
0BF	191	TEE				TREND1. The parameter number which data is taken from for the TREND 1 storage buffer.

9-1.9
Diagnostics (cont.)

HEX	D	TYPE	MIN	MAX	DEFAULT	EXPLANATION
0C0	192	TEE				TREND2. Same as TEE191, but for Trend 2.
0C1	193	TEE				TREND3. Same as TEE191, but for TREND 3.
0C2	194	TEE				TREND4. Same as TEE191, but for TREND 4.
0C3	195	TEE				TREND5. Same as TEE191, but for TREND 5.
0C4	196	TEE				TREND IVAL. Sets the time between trend samples in multiples of 3 ms. The Trend sample interval as set by parameter 196 applies to all eight trends.
0C5	197	TEE				TREND TRIG. Sets the value difference between samples of data in TREND 1 at which saving of all eight trends is triggered.
0C6	198	TEE				
0C7	199	TEE				TREND SAVE. If 199 is set nonzero, all the trends will be saved.
0C8	200	TEE				TRIGCOUNT. Counts the number of trend triggerings.

9-1.10
Actual Values

HEX	D	TYPE	MIN	MAX	DEFAULT	EXPLANATION
0C9	201	T	0	0		IRE. Active component of motor current in .072% units of the inverter rated current. Positive in motoring and negative in generating.
0CA	202	T	0	0		T ACT. Filtered actual value of the motor active current 201T. in .1 PERCENT of Rated.
0CB	203	T	0	0		P ACT. Filtered motor power actual.
0CC	204	T	0	0		U ACT. Filtered actual value of output voltage in .1 percent of rated.
0CD	205	T	0	0		I ACT. Filtered inverter Total output current in .1 percent of rated current.
0CE	206	T	0	0		COS PHI. In .1 percent.
0CF	207	T	0	0		U CACT. The actual value of DC voltage in .1 percent of rated.
0D0	208	T	0	0		FACT. Filtered actual value of frequency in .01 Hz.
0D1	209	T	0	0		DIRECTION. Zero equals positive direction and nonzero equals negative direction.

9-1.11 Logic Information from the Inverter

HEX	D	TYPE	MIN	MAX	DEFAULT	EXPLANATION
0D2	210	T	0	0		FAULTWORD0. Packed fault word where every bit indicates different fault. FL is the number that indicates fault type in 176T and in CP1 display. FL Bit 1 0 = chopper undervoltage 2 1 = chopper overvoltage 3 2 = auxiliary power failure 4 3 = overtemperature 5 4 = overcurrent 6 5 = DC-overvoltage 7 6 = DC-undervoltage 8 7 = not used 9 8 = 1U-fault 10 9 = 2U-fault 11 10 = 1V-fault 12 11 = 2V-fault 13 12 = 1W-fault 14 13 = 2W-fault 15 14 = not used 16 15 = not used
0D3	211	T	0	0		FAULTWORD1. Packed bit coded fault word. FL Bit 17 0 = serial communication fault 18 1 = speed measuring fault 19 2 = current measuring fault 20 3 = stalling 21 4 = adapter board failure 22 5 = processor failure
0D6	214	T	0	0		SAMISTATUS. Status word of inverter Bit 0 = running 1 = ready 2 = fault

9-1.12
Measuring Points

HEX	D	TYPE	MIN	MAX	DEFAULT	EXPLANATION
0DA	218	T				
0DB	219	T	0	0		IR. Instant value of R-phase output current in .01 percent of the inverter rated current.
0DC	220	T	0	0		IS. Instant value of S-phase output current in .01 percent of the inverter rated current.
0DD	221	T	0	0		IQ. The reactive component of output current in .01 percent of the inverter rated current.
0DE	222	T	0	0		ID. The reactive component of output current in .01 percent of the inverter current.
0E0	224	T	0	0		IACT. Unfiltered total current in the output of the inverter in .1 percent of the inverter rated current.
0E1	225	T	0	0		FREQREF2. Frequency reference before ramp after limiter in .01 Hz.
0E2	226	T	0	0		FREQREF4. Frequency reference after ramp in .01 Hz.
0E3	227	T	0	0		UCACT. (Value of 178 = Rated UC Voltage)
0E4	228	T	0	0		FACT.
0E6	230	T	0	0		UREF. Voltage reference to modulator. 64,000 equals rated output voltage when UC has its rated value.
0E7	231	T	0	0		FREQREF1. Unlimited frequency reference before Limiter in .01 Hz.
0E8	232	T	0	0		FREQSEL. The internal frequency reference in 0.1 Hz.
0E9	233	T	0	0		THETA. The angle of voltage vector to R-phase scaled so that zero is zero degrees and 1535 is 360 degrees.
0EB	235	T	0	0		EMFVECTOR. Voltage reference before IR Compensation scaled so that 32,000 is rated voltage when DC voltage has its rated value.
0F1	241	TEE				TREND6. Same as TEE191, but for TREND 6.
0F2	242	TEE				TREND7. Same as TEE191, but for TREND 7.
0F3	243	TEE				TREND8. Same as TEE191, but for TREND 8.

9-1.13
SAFT 143 TBC
Inputs and Outputs

HEX	D	TYPE	MIN	MAX	DEFAULT	EXPLANATION
0F5	245	T				DIG INPUTS. To this address TBC sends the status of each digital input as packed bit word. This word will be decoded into different addresses in application block DIGITAL INPUT.
0F6	246	T				ANAIN0. To this address TBC sends its analog input. An input of application block ANALOG INPUTS 0.
0F7	247	T				DIG OUTPUTS. Output of application block DIGITAL OUTPUTS that is transmitted to TBC. Contains bits that control digital outputs of TBC.
0F8	248	T				ANAOUT0. Output of application block ANALOG OUTPUTS that will be transmitted to TBC. Controls the analog output 0 of TBC.
0F9	249	T				ANAOUT1. Same as above, but controls TBC ANALOG OUTPUT 1.
0FA	250	T				ANAIN1. Data from optional analog board, channel 1. Input for the application block ANALOG INPUTS 1.
0FB	251	T				ANAIN2. Data from optional analog board, channel 2. Input of application block ANALOG INPUTS 2.
0FC	252	T			1	DA2REFADDR. Negative input of SAFT 101 CON DA-converter channel 2. Like TEE186.
0FD	253	T			232	DA2ADDR. Positive input of DA-converter 2. Like TEE187.
0FE	254	T			6	DA2SCALE. Factor for scaling the variable to seven bit wide before conversion. Like TEE188.
0FF	255	T			1	DA2MODE. DA-converter operating mode. Like TEE189.

9-1.14
Scalar Control 3

HEX	D	TYPE	MIN	MAX	DEFAULT	EXPLANATION
12F	303	T				SAMIDATA. The data of latest message through serial channel 1 with no parity or checksum errors.
130	304	T				SAMIADR. The address of the message above.
131	305	T				SAMIDATA1. The data of the latest message within parameter limits through channel 11.
132	306	T				SAMIDATA1. The address of the message above.
133	307	T				SAMIDATA2. Same as 303T, but in serial channel 2.
134	308	T				SAMIADR2. Same as 304T, but in serial channel 2.
135	309	T				SAMIDATA3. Same as 305T, but in serial channel 2.
136	310	T				SAMIADR2. Same as 306T, but in serial channel 2.

9-1.15
Scalar Control 3

HEX	D	TYPE	MIN	MAX	DEFAULT	EXPLANATION
140	320	T				TREND1 FETCH. All 100 samples in TREND1 will be transported to this parameter location subsequently with 20ms intervals. This parameter can be connected to DA-converter to enable displaying trend buffer content by an oscillosocpe.
141	321	T				TREND2 FETCH. Same as above, but for TREND 2.
142	322	T				TREND3 FETCH. Same as above, but for TREND 3.
143	323	T				TREND4 FETCH. For TREND 4.
144	324	T				TREND5 FETCH. For TREND 5.
145	325	T				TREND6 FETCH. For TREND 6.
146	326	T				TREND7 FETCH. For TREND 7.
147	327	T				TREND8 FETCH. For TREND 8.

9-1.16
EPROM Revision Data

HEX	D	TYPE	MIN	MAX	DEFAULT	EXPLANATION
14A	330	T			30	DEVICETYPE. 10 = DC 20 = Vector Control 30 = Scalar Control 40 = Line Inverter
14B	331	T			201	REVISION. 201 equals 2.01.
14C	332	T			5601	EPROM-low component code.
14D	333	T			5086	D17.
14E	334	T			5601	EPROM-high component code.
14F	335	T			5094	D18.

9-1.17
Active Current Limiting Control

HEX	D	TYPE	MIN	MAX	DEFAULT	EXPLANATION
15F	351	TEE	0	10000	500	KP IREHIGH. P-gain of motoring active current limiter.
160	352	TEE	0	1000	50	TI IREHIGH. I-gain of motoring active current limiter.
161	353	TEE	0	5000	0	TD IREHIGH. D-gain of motoring active current limiter.
162	354	TEE	0	10000	500	KP IRELOW. P-gain of generatoring active current limiter.
163	355	TEE	0	1000	50	TI IRELOW. I-gain of generatoring active current limiter.
164	356	T	0	5000	0	TD IRELOW. D-gain of generatoring active current limiter.

9-1.18
UC Control and Stabilization

HEX	D	TYPE	MIN	MAX	DEFAULT	EXPLANATION
168	360	TEE	0	100	0	KP UC1 H. High part of the 32 bit P-gain of external UC-controller.
169	361	TEE			32797	KP UC1 L. Low part of the 32 bit P-gain of the UC-controller.
16A	362	TEE	0	100	4	TD UC. D-gain of external UC-controller.
16B	363	TEE	0	10000	800	KP UCPI. P-gain of internal UC-controller.
16C	364	TEE	0	1000	100	TI UCPI. D-gain of internal UC-controller.
16F	367	TEE			0	KP1FUCS. P-gain of UC-stabilizer.
170	368	TEE			0	KP2FUCS. D-gain of UC-stabilizer.
171	369	TEE			30000	KP1FIRES. P-gain of torque stabilizer.
172	370	TEE	0	32000	40	KP2FIRES. D-gain of torque stabilizer.
174	372	TEE	0	32000	10000	KPQ 2. P-gain of boost controller (IR Compensation).
175	373	TEE	0	32000	1000	TIQ K. I-gain of boost controller.
176	374	TEE	0	10000	1000	KP IREH2. P-gain of motoring active current limiter when pulse number is 7 or 9 (frequency is below 25 Hz.)
177	375	TEE	0	10000	100	TI IREH2. I-gain of motoring active current limiter when frequency is below 25 Hz.
178	376	TEE	0	10000	3000	KP UCLOW. P-gain of UC-minimum limiting controller (power loss controller).
179	377	TEE	0	2000	300	TI UCLOW. I-gain of UC-voltage minimum limiter.
17A	378	TEE	0	32000	9000	TD UCLOW. D-gain of UC-voltage minimum limiter.
17B	379	TEE	0	10000	100	TI UCLOW HIDAS. Slower I-gain of UC-voltage minimum limiter.
17C	380	TEE	0	3000	550	KP STEP. Multiplier for negative frequency step applied in power loss.
17D	381	TEE	0	30	2	KP UOSTEP. Multiplier for negative voltage step in power loss.

9-1.19
Control Limits

HEX	D	TYPE	MIN	MAX	DEFAULT	EXPLANATION
187	390	T	0	0		IREMAX1. Motoring active current limit used by limiting amplifier. 79TEE plus eventual additional corrections.
188	391	T	0	0		IREMIN1. Generatoring active current limit used by limiting amplifier. 80TEE plus eventual additional corrections.
289	392	TEE	0	10000	4000	UFIRMAX. Positive limit of the output of boost controller. 32,000 equals maximum output voltage.
18A	393	TEE	-10000	0	-4000	UFIRMIN. Negative limit of the output of boost controller.
18C	395	TEE	0	255	210	UCHIGH. UC-maximum limit. Scaled in the same way as UC-actual (227T).
18E	397	TEE	0	50	18	UC MARGINAALI. Offset for UC-minimum limit. The limiting controller is activated when unfiltered UC surpasses value filtered UC -397TEE.
192	401	TEE	0	1000	98	KP UCMAX. Maximum value for P-gain of UC-controller.
193	402	TEE	0	1000	10	KP UCMIN. Minimum value for P-gain of UC-controller.
196	405	T	0	0		ABSFMAX. Internal frequency limit. In positive direction 62TEE plus 2 Hz. In negative direction 63TEE minus 2 Hz.
199	409	TEE	0	500	200	FUCLH. Positive maximum value of UC-stabilizer in .01 Hz.
19A	410	TEE	-500	0	-200	FUCLL. Negative limit of UC-stabilizer in .01 Hz.
19B	411	TEE	0	500	200	FIRELH. Positive limit of active current stabilizer in .01 Hz.
19C	412	TEE	-500	0	-200	FIRELL. Negative limit of active current stabilizer in .01 Hx.

9-1.20 Outputs of Stabilizers

HEX	D	TYPE	MIN	MAX	DEFAULT	EXPLANATION
1A2	418	T	0	0		FREQ IRE STAB. Output of active current stabilizer in .01 Hz.
1A3	419	T	0	0		FREQ UC STAB. Output of UC-stabilizer in .01 Hz.
1A4	420	T	0	0		NEG FREQ STEP. Magnitude of negative frequency step in case of power loss. 380TEE* 201T/65536.
1A5	421	T	0	0		FSLIP. Output of slip compensator in .01 Hz.
1A6	422	T	0	0		UFIR. Additional voltage refrence from boost function. 32000 equals full output voltage.
1A7	423	T				IREHLAHTO.
1A8	424	T				IRELLAHTO.

9-1.21
Controller Flags

HEX	D	TYPE	MIN	MAX	DEFAULT	EXPLANATION
1AC	428	TEE	0	255	255	SAATO MUKAAN. This flag, if zero, disables active current limit and UC limit controllers. It can be used in an emergency when there is a fault in current measuring.
1AF	431	T	0	0		IREHIGHCONT. When motoring active current limit is active, this flag is 255, otherwise 0.
1B0	432	T	0	0		IRELOWCONT. When generatoring active current limit controller is active, this flag is 255, otherwise 0.
1B1	433	T	0	0		UCHIGHCONT. When UC-maximum controller is active, this flag is 255, otherwise 0.
1B2	434	T	0	0		UCLOWCONT. When UC-minimum controller is active, this flag is 255, otherwise 0.
1B3	435	TEE	0	2000	150	SLIP FREQ. The motor rated slip in .01 Hz.
1B4	436	TEE	0	32767	600	INTACC IR. Frequency ramp rate in units .015/Hz. in boost mode 3 when frequency is below 435TEE plus 1 Hz.
1B5	437	TEE	0	20000	500	FREQIR KESKI. Minimum frequency of active current limiter in boost mode 3.
1B6	438	TEE	0	20000	1500	FREQIR YLA. Maximum frequency of ramp time 3*64TEE in boost mode 3.
1B7	439	T	0	0		INTACC1. Actual acceleration ramp time.
1B8	440	TEE	0	300	0	TMXANGO. Active current correction at zero frequency. Correction to voltage angle in order to get emf angle. 1535 equals 360 degrees.
1B9	441	TEE	0	2000	800	TMXFREQ0. The frequency where correction according to TEE440 goes to zero.
1BA	442	TEE	0	300	0	TMXANG1. Like 440TEE.
1BB	443	TEE	0	2000	1400	TMXFREQ1. Like 441TEE. 440TEE and 443TEE define two linear functions that slope when frequency increases. The maximum value of these functions is selected.

9-1.22
Scalar Control 4

HEX	D	TYPE	MIN	MAX	DEFAULT	EXPLANATION
1BE	446	TEE	1	20000	20	STOP FREQ. Frequency at which the inverter stops (stops modulation) after stop command. (In .01 Hz.)
1BF	447	T	0	0		IREAVE. Eighteen millisecond average of 201T active current. (Scaling in .072% of the inverter rated current.
1C0	448	TEE	10	2000	300	IREFL. Internal IRE Limit Floor (See Sect. 4-3.3)
1C1	449	TEE	1	1000	200	IREMAXIASKEL. Maximum positive step of 390T in 3ms when active current is increasing.
1C2	450	TEE	-1000	1000	0	IREMAXSTEP. If 201T is greater than 79TEE, then 390T is decreased by this value in every 3ms.
1D0	464	T	0	0		ABSFREQ. Internal Unsigned Frequency Reference
1D4	468	TEE	1	100	10	DELTA FREQSEL Maximum frequency reference step in 3ms allowed by second ramp block

9-1.23
Trend Buffer Data

HEX	D	TYPE	MIN	MAX	DEFAULT	EXPLANATION
1F4	500	T				When trend has triggered, 100 subsequent trend samples are transferred to each trend data buffer. Parameter area 500T to 599T contains the data from trend channel 1.
257	599	T				
258	600	T				Data of trend buffer 2. 600T to 699T
2BB	699	T				Data of trend buffer 2.
2BC	700	T				Data of trend buffer 3. 700T to 799T
31F	799	T				Data of trend buffer 3.
320	800	T				Data of trend buffer 4. 800T to 899T
383	899	T				Data of trend buffer 4.
384	900	T				Data of trend buffer 5. 900T to 999T
3E7	999	T				Data of trend buffer 5.
3E8	1000	T				Data of trend buffer 6. 1000T to 1099T
446	1099	T				Data of trend buffer 6.
447	1100	T				Data of trend buffer 7. 1100T to 1199T
4AF	1199	T				Data of trend buffer 7.
4B0	1200	T				Data of trend buffer 8. 1200T to 1299T
513	1299	T				Data of trend buffer 8.

9-2 Drive Software Application Programming

The Drive contains a group of program modules we designate as Function Blocks. These blocks can be arranged to perform many different software programs, thereby customizing the drive to meet the specific customer application. A brief description of each functional block used in the Bulletin 1352 and it's potential applications is contained in this section. Also included is a description of the basic block programming technique, and the equipment required to carry out programming.

The programming of the automation system with the Bulletin 1352 functional blocks is similar to the "programming" of different functions using discrete electronics boards.

9-2.1

Programming - The programming steps are:

A. A general block diagram of the system to be controlled must be drawn showing the operation of the system.

B. The functions are then defined using the functional blocks.

C. When the "connections" between the functional blocks have been determined, the blocks are grouped in the Program Sequence in the order they are to be logically executed.

When connecting blocks, the logical (L) and numerical (N) pins CANNOT be connected. The output (OUT) address of the block to be connected must be set to the input pin of another block as shown in Figure 9-2. The SCALAR block is used for final setting of the operating instructions for the inverter unit, and for feedback of the inverter's operating state.

The TABLE, from address 1801 and up, contains a 70 place MENU. The block identification codes must be stored in this menu in their order of execution. For the block program to be executed, it is necessary to set a "1" at address 1800. The blocks in the menu table are executed until the identification code "0" is reached (Table 9-2). If you wish a block in the menu to be skipped or NOT EXECUTED, a "-1" must be written in place of its identification code.

With the exception of I/O blocks, all blocks must have an identification code in the upper right hand corner . I/O blocks do not contain identification codes, because they are always included in the program.

Remember: The inputs of each block (With the exception of Input and Control Panel Blocks) must be connected to the output of another block (Figure 9-2). The desired block output parameter value is set to the block input parameter address. The parameters related to each block cannot be connected, as they are internal values of the block.

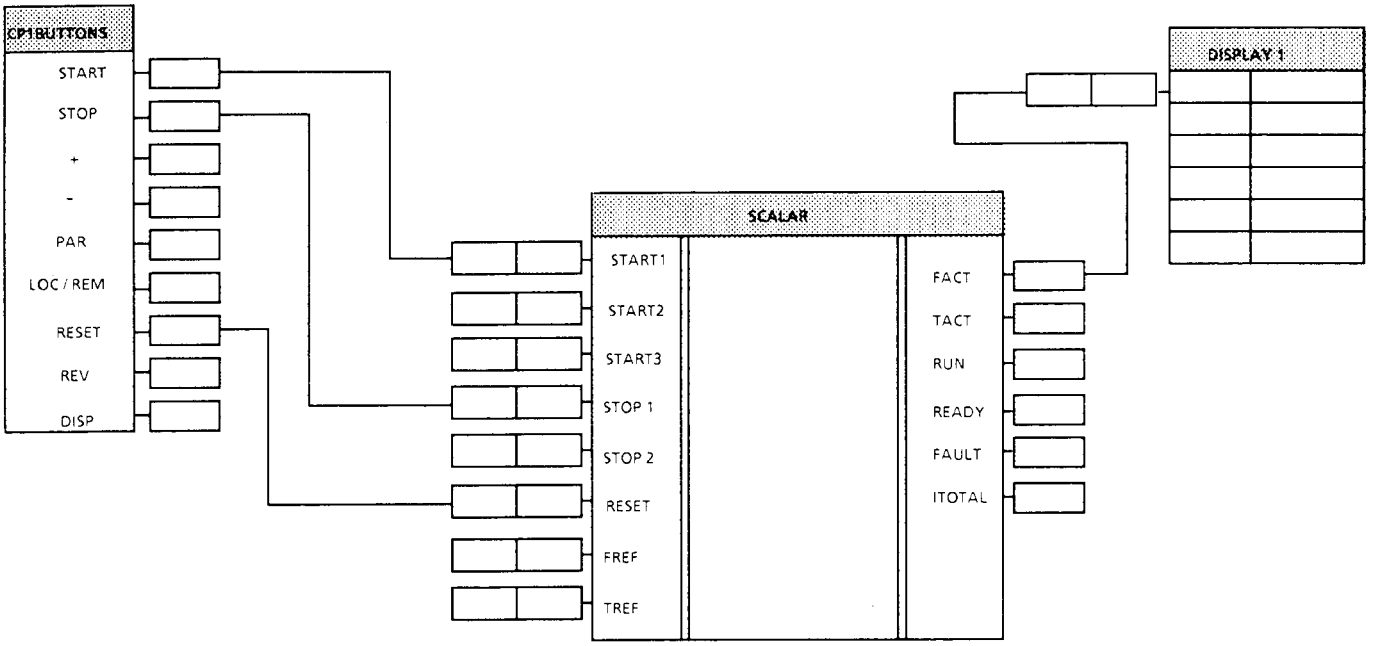

Figure 9-2. Typical Connection Diagram

Table 9-2. MENU Table Example

SAMI TABLE ADDRESS	IDENTIFICATION CODE
1801	21
1802	15
1803	13
1804	26
1805	0

The software carries out the limit checks of certain parameters, in order to prevent setting of values that do not make sense. When the set parameter exceeds the given upper limit, a fault message, FL 24 appears. When the parameter goes below the lower limit, a fault message, FL 23, appears. When the DISPLAY button is pressed, the fault message is reset.

If a new value will also be stored in the EEPROM memory, the content of address 8 must be set NOT EQUAL to 0.

The parameter setting is disabled when the value of input CP1LOCK (address 1356) is not equal to 0.

9-2.2 Display Blocks

9-2.2.1 Display 0, Control Panel CP1

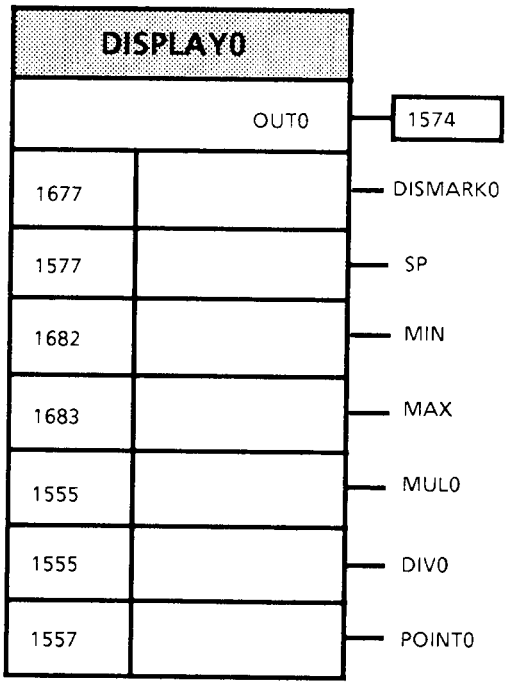

Figure 9-3. DISPLAY0 Block

Figure 3 Legend

Pin	Type	Pin Description
OUT0	ON	Display Value before Scaling
DISMARK0	PN	Display Char. Selection
SP	PN	Rate of change of Display
MIN	PN	Minimum Display Value before Scaling.
MAX	PN	Maximum Display Value before Scaling.
MUL0	PN	Display Scaling, Factor
DIV0	PN	Display Scaling, Scalar
POINT0	PN	Place of decimal point in the Display

The DISPLAY0 block shown in Figure 9-3 is used to set and display a reference value. The standard format capitol"C" is set as the display character for this block. After selecting display "C" with the DISPLAY button, the operator sets the desired reference value by pushing either the plus or minus button until the desired value appears on the display.

IMPORTANT: Pushing the plus (+) or minus (-) button during display C, r,H,A or U, updates the value supplied to C. Pushing the plus (+) or minus (-) button down continously, increases the rate of change of the display by steps (2) When the button is released after a preset period, pushing the button again will repeat the same function.

To successfully carry out the functions described above, the DISPLAY0 block must be connected. The DISPLAY0 block is connected as follows:

A. The reference value OUT0 is connected to the FREF pin in the SCALAR block. MIN is the lower limit and MAX the upper limit for OUT0. The value in the panel display is the scaled value of the OUT0 output.

B. A value corresponding to the desired display character is set to parameter DISMARK0. (See Section 4-3.8)

C. The rate of change of the display can be altered by changing the value set to parameter SP as follows:
SP = 0, only the parameter display functions appear.
SP = 1, very fast change.
SP = 2, fast change.
SP = 3, normal rate of change
SP = 4, slow change.

D. POINTO (place of the decimal point) can be set for the following values:
POINTO = 1, corresponds to division by 10.
POINTO = 2, corresponds to division by 100.
POINTO = 3, corresponds to division by 1000.

9-2.2.2 Display 1,2,3,4, Control Panel CP1

Figure 4 Legend

Pin	Type	Pin Description
D?SOURCE	IN	Addr . of Displayed Data
DISMARK?	PN	Display Char. Selection
SP	PN	Rate of change of Display
MUL?	PN	Scaling Factor
DIV?	PN	Scaler
POINT?	PN	Place of Decimal Point

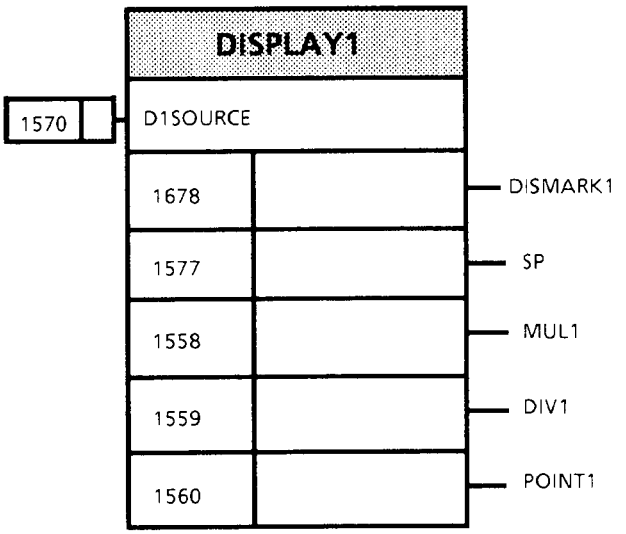

Figure 9-4. DISPLAY1 Block

The DISPLAY1,2,3and 4 blocks are used to for showing a scaled actual-value of the inverter on the display. The address, whose content is to be scaled and displayed, is set in table place D?SOURCE.

DISPLAY? = D?SOURCE * MUL?/DIV?

The value appearing on the display is influenced by the value of POINT? (place of decimal point):

POINT? = 1, corresponds to division by 10
POINT? = 2,corresponds to division by 100
POINT? = 3, corresponds to division by 1000

For directions on selecting the DISMARK? display character and/or display scaling, see Sect. 4-3.8.

A schematic representation of the Display 2 thru 4 blocks with their pin addresses is shown below.

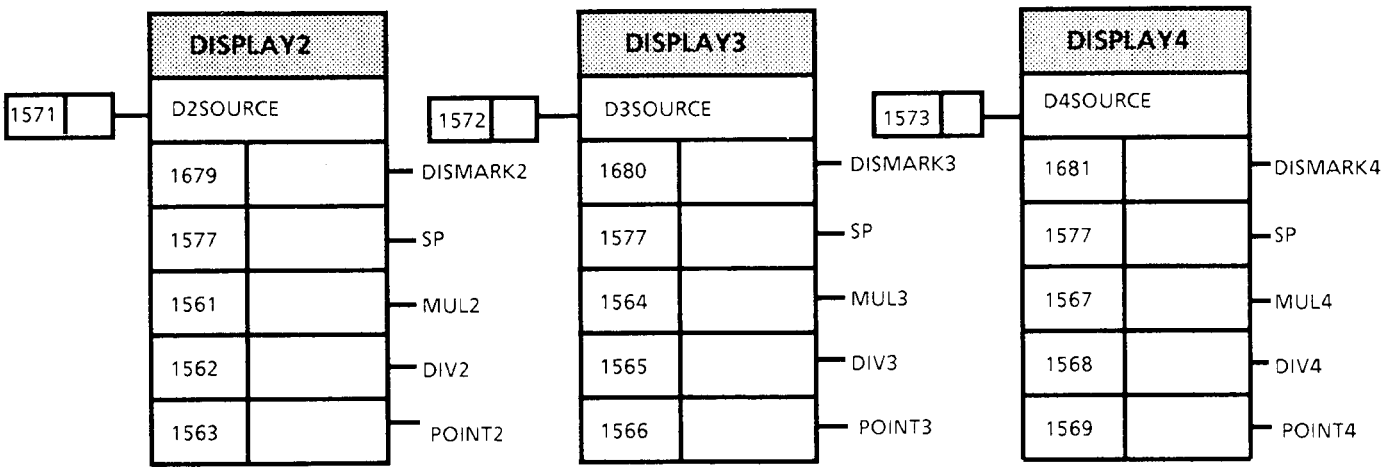

9-2.2.3 Special Display

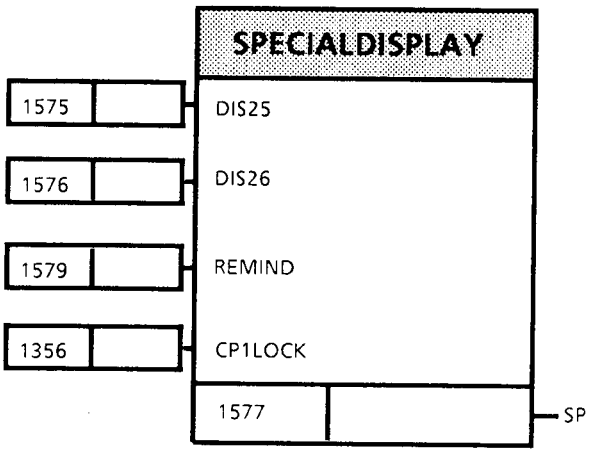

Figure 9-5. SPECIALDISPLAY Block

Figure 5 Legend

Pin	Type	Pin Description
DIS25	IL	Display
DIS26	IL	Display
REMIND	IL	Local/Remote Control
CP1LOCK	IL	Parameter Set. Disabled
SP	PN	Displays Disabled

The SPECIALDISPLAY block is used for altering the functions of the display panel.

If the input of table address 1575 is not equal to 0, FL 25 will be displayed.
If the input of table address 1576 is not equal to 0, FL 26 will be displayed.
If the input of table address 1579 is not equal to 0, a decimal point will be displayed in the lower right hand corner of the last digit in the display. This function can be used to indicate local or remote control of the drive.

If the input of table address 1356 is not equal to 0, the setting of parameters will be disabled.
If the value of parameter SP is set to 0, only the parameter display will function, and all other display modes will be disabled.

9-2.2.4 Control Panel CP1 Diagnostic Display

The CONTROL PANEL CP1 DIAGNOSTIC DISPLAY block is used for fault displays.

A fault message FL XX, (Table 9-3) is displayed whenever a fault is detected on the drive control card. Faults 01 thru 21 can be reset either by writing a value not equal to 0 in address 12, or by pushing the reset button. Faults 25 thru 27 are reset by pushing the Display button.

Table 9-3. Fault Code Displays

CODE	FAULT MESSAGE
FL 01	CHOPPER UNDERVOLTAGE (GTO)
FL 02	CHOPPER UNDERVOLTAGE (GTO)
FL03	AUXILIARY VOLTAGE FAILURE
FL 04	OVERTEMPERATURE
FL 05	OVERCURRENT
FL 06	DC OVERVOLTAGE
FL 07	DC UNDERVOLTAGE
FL 08	
FL 09	SEMICONDUCTOR FAULT UPPER LEG OF U -PHASE
FL10	SEMICONDUCTOR FAULT LOWER LEG OF U-PHASE
FL11	SEMICONDUCTOR FAULT UPPER LEG O V - PHASE
FL12	SEMICONDUCTOR FAULT LOWER LEG OF V - PHASE
FL13	SEMICONDUCTOR FAULT UPPER LEG OF W - PHASE
FL14	SEMICONDUCTOR FAULT LOWER LEG OF W - PHASE
FL15	SHORT CIRCUIT (GTO UNITS)
FL16	
FL17	SERIAL COMMUNICATION FAILURE
FL18	TACHOMETER FAILURE
FL19	CURRENT MEASUREMENT FAULT
FL20	
FL21	MATCHING CARD FAULT
FL23	PARAMETER VALUE TOO SMALL
FL24	PARAMETER VALUE TOO LARGE
FL25	FAULT INTERLOCK (Ground Fault Option)
FL26	FAULT INTERLOCK (Motor Overtemperature Option)
FL27	PARAMETER CHANGE NOT PERMITTED

9-2.3 Functional Blocks (Optional)

9-2.3.1 General

All the application blocks for The Bulletin 1352 drive are described in this section, although not all may be present, as some are optional.

The application blocks (Figure 9-6) are program modules that can be connected together by following certain rules.

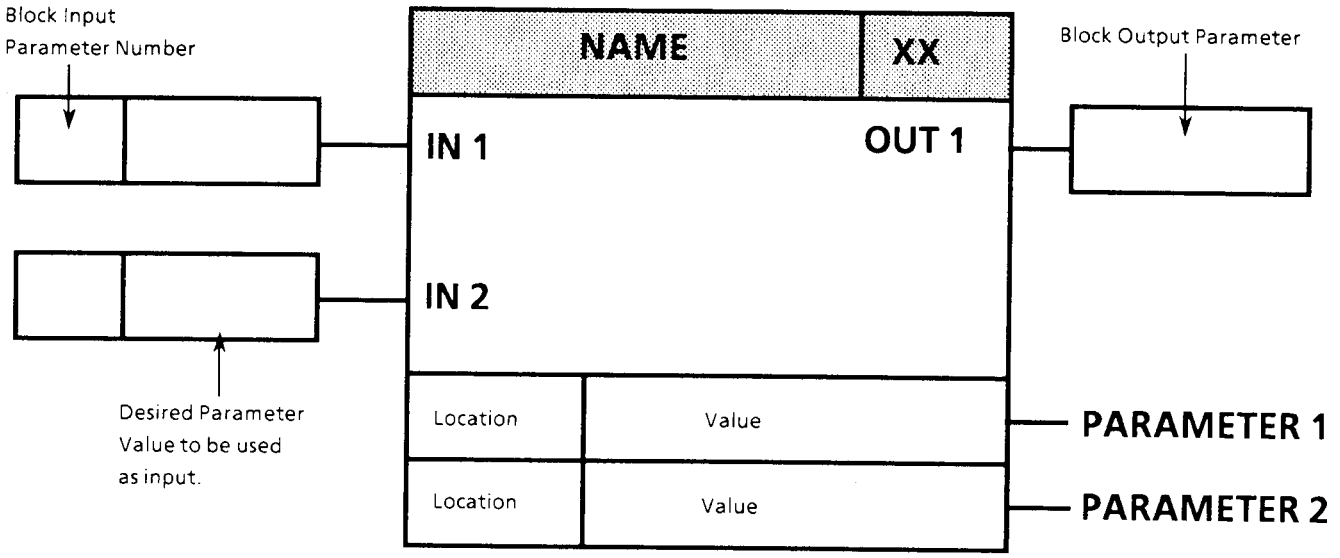

Figure 9-6. Schematic Block Representation

Each functional block is divided into five different fields:

- Inputs IN1 and IN2 etc.
- Outputs OUT1, OUT2 etc.
- Parameters, PARAMETER 1, PARAMETER 2, etc.
- Block Name , NAME
- Block Identification code, XX.

Following the table address in the Input Pin Block (I), the address of the content which will be processed is entered. Normally this address is the OUT (O) output of another block.

The output value table address is stored in the output pin block by the program module.

The Parameter (P) is used to select various functional modules within a block or to scale and limit the value. The Parameter is not a pin like the Input or Output, as it cannot be connected to other blocks.

The Identification Code is used for execution of the block, to help place the block in the correct sequence in the program.

The Name of the Block is an abbreviated name that helps describe the function of the block.

The INPUT (I), the OUTPUT (O) and the parameter (P) can be either logical (L) (-1 = true and 0 = false),numerical, a truth table, or a description of the function performed by the block.

9-2.3.2 NOT

Figure 9-7. Legend

Pin	Type	Pin Description
IN	IL	Input
OUT	0L	Output

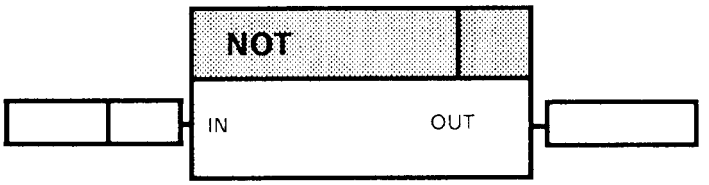

Figure 9-7. NOT Block

The NOT Block is used for logic inverting where OUT = IN For example:

If IN = 0 then OUT = -1
If IN = -1 then OUT = 0

9-2.3.3 2 - INPUT OR

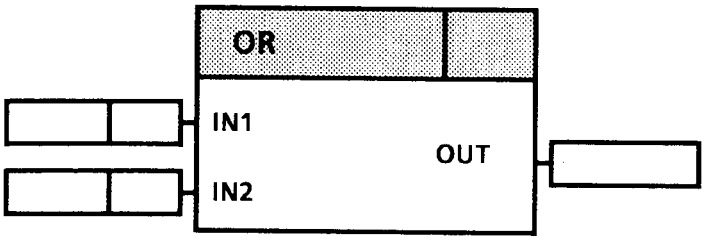

Figure 9-8. 2 - INPUT OR Block

Figure 9-8 Legend

Pin	Type	Pin Description
IN1	IL	Input
IN2	IL	Input
OUT	0L	Output

The 2 - INPUT OR Block is used for a logic OR function where OUT = -1 if IN1 or IN2 = -1.

If IN1 = -1 and IN2 = 0, then OUT = -1
If IN1 = 0 and IN2 = -1, then OUT = -1
If IN1 = 0 and IN2 = 0 then OUT = 0

9-2.3.4 2 - INPUT AND

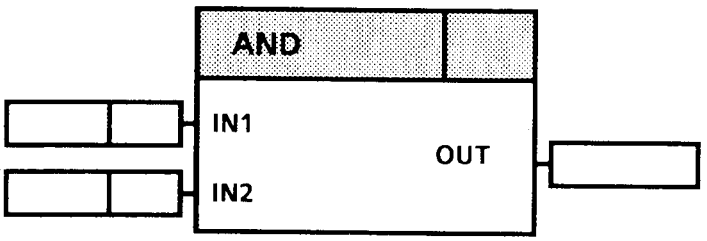

Figure 9-9. 2 - INPUT AND Block

Figure 9- 9 Legend

Pin	Type	Pin Description
IN1	IL	Input
IN2	IL	Input
OUT	0L	Output

The 2 - INPUT AND Block is used for a logic AND function where OUT = -1 if both IN1 and IN2 = -1.

If IN1 = -1 and IN2 = -1, then OUT = -1
If IN1 = -1 and IN2 = 0 then OUT = 0
If IN1 = 0 and IN2 = -1 then OUT = 0

9-2.3.5 SR FLIP - FLOP

Figure 9-10 Legend

Pin	Type	Pin Description
S	IL	Input
R	IL	Input
OUT	0L	Output
$\overline{\text{OUT}}$	OL	Inverted Output

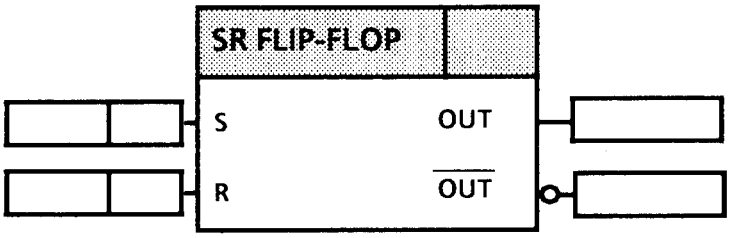

Figure 9-10. SR FLIP - FLOP Block

The SR Flip-Flop block performs a set - reset function.

When S = R = 0 then the previous state remains and outputs do not change.
When S = 0 and R = -1, then OUT = 0 and OUT = -1
When S = -1 and R = 0, then OUT = 1 and OUT = 0
When S = -1 and R = -1 then OUT = 0 and OUT = 1

9-2.3.6 JK FLIP - FLOP

Figure 9-11 Legend

Pin	Type	Pin Description
CLK	IL	Input
OUT	IL	Output
$\overline{\text{OUT}}$	0L	Inverted Output

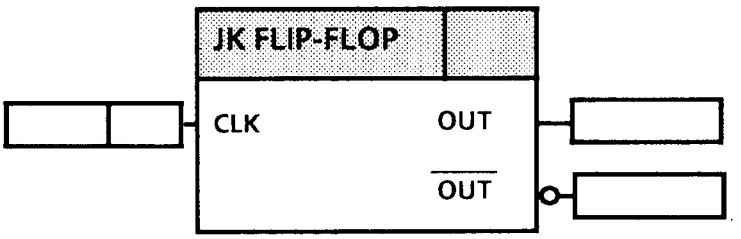

Figure 9-11. JK FLIP - FLOP Block

The JK Flip-Flop block changes the state of OUT when the CLK pulse changes from 0 to -1 as shown below:

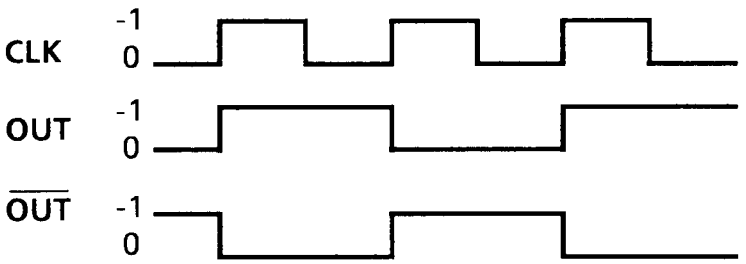

9-2.3.7 2 - INPUT ADDER

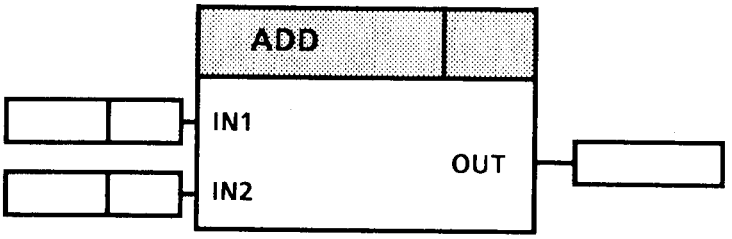

Figure 9-12. 2 - INPUT ADDER BLOCK

Figure 9-12 Legend

Pin	Type	Pin Description
IN1	IN	Input
IN2	IN	Input
OUT	0N	Output

The 2-Input Adder block sums two numbers, so that IN1 + IN2 = OUT. Signed arithmetic is used with a value range of ± 32768.

9-2.3.8 2 - INPUT MULTIPLIER

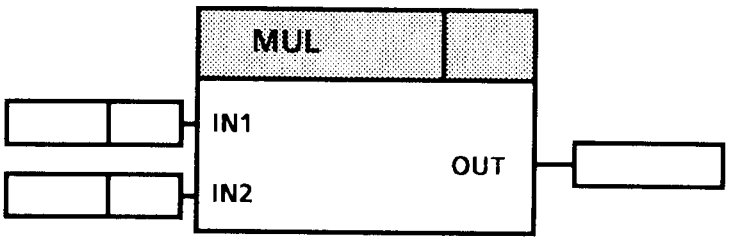

Figure 9-13. 2 - INPUT MULTIPLIER BLOCK

Figure 9-13 Legend

Pin	Type	Pin Description
IN1	IN	Input
IN2	IN	Input
OUT	0N	Output

The 2-Input Multiplier block multiplies two numbers, so that IN1 x IN2 = OUT. The value range is ± 32768.

9-2.3.9 SCALE

Figure 9-14 Legend

Pin	Type	Pin Description
IN	IN	Input
OUT	ON	Output
MUL	PN	Scaling Factor
DIV	PN	Scaler

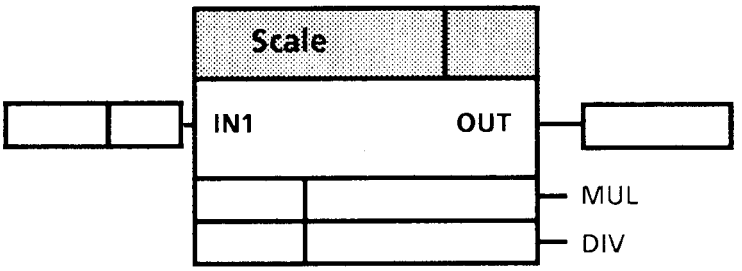

Figure 9-14. SCALE BLOCK

The Scale block provides a direct divide function by multipling IN times a preset factor, and then dividing this product by a preset scaler to obtain OUT. The value range is ± 32768.

$$OUT = IN^* (MUL/DIV)$$

9-2.3.10 ABS

Figure 9- 15 Legend

Pin	Type	Pin Description
IN	IN	Input
OUT	ON	Output

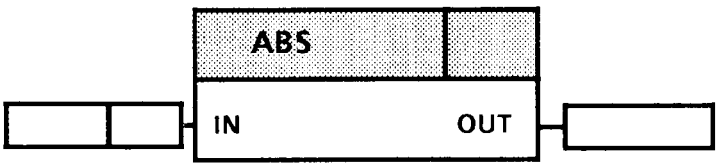

Figure 9-15. ABS BLOCK

The Absolute Value Block assigns a positive output value to the output value regardless of the input value sign.

$$OUT = |IN|$$

9-2.3.11 MAXIMUM/MINIMUM SELECTOR

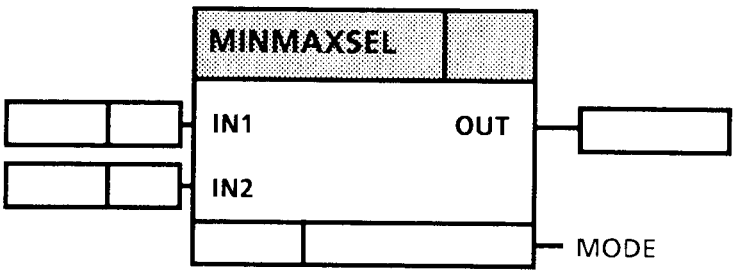

Figure 9-16. MIN/MAX SEL BLOCK

Figure 9-16 Legend

Pin	Type	Pin Description
IN1	IN	Input
IN2	IN	Input
OUT	ON	Output Numeric
MODE	PL	

The Minimum/Maximum Block selects the lesser of IN1 or IN2 when MODE = 0, and the greater of IN1 or IN2 when MODE = - 1.

If IN1 > IN2 and MODE = 0 then OUT = IN2.
If IN1 > IN2 and MODE = -1 then OUT = IN1
If IN1 < IN2 and MODE = 0 then OUT = IN1
If IN1 < IN2 and MODE = -1 then OUT = IN2

9-2.3.12 ONE OF TWO SELECTOR

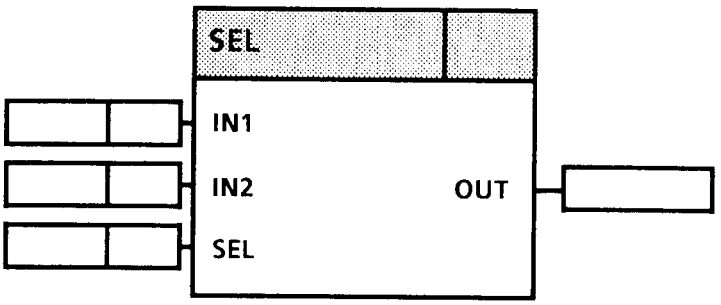

Figure 9-17. ONE OF TWO SEL BLOCK

Figure 9-17 Legend

Pin	Type	Pin Description
IN1	IN	Input
IN2	ON	Input
SEL	PL	Selector
OUT	ON	Output

The One of Two Selector Block selects the IN1 to output when SEL = 0 and the IN2 as the output when SEL = -1.

If SELECT = -1, then OUT = IN2
If SELECT = 0, then OUT = IN1

9-2.3.13 COMPARATOR

Figure 9- 18 Legend

Pin	Type	Pin Description
IN1	IN	Input
IN2	IN	Input
OUT	OL	Output
HYST	PN	Hysteresis

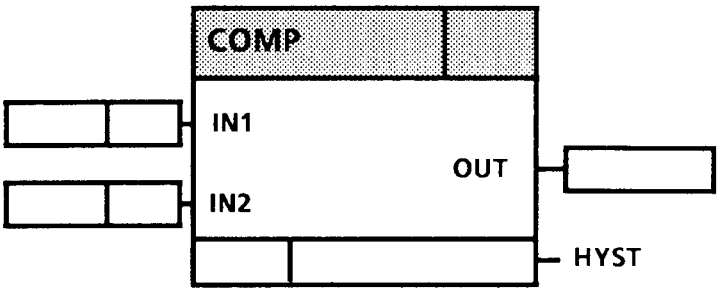

Figure 9-18. COMPARATOR Block

The Comparator Block helps provide an Interface between analog and digital signals by making a magnitude comparison (including hysteresis) of IN1 and IN2 to obtain the OUT output.

OUT = -1 if IN2 + HYST is greater than or equal to IN1.

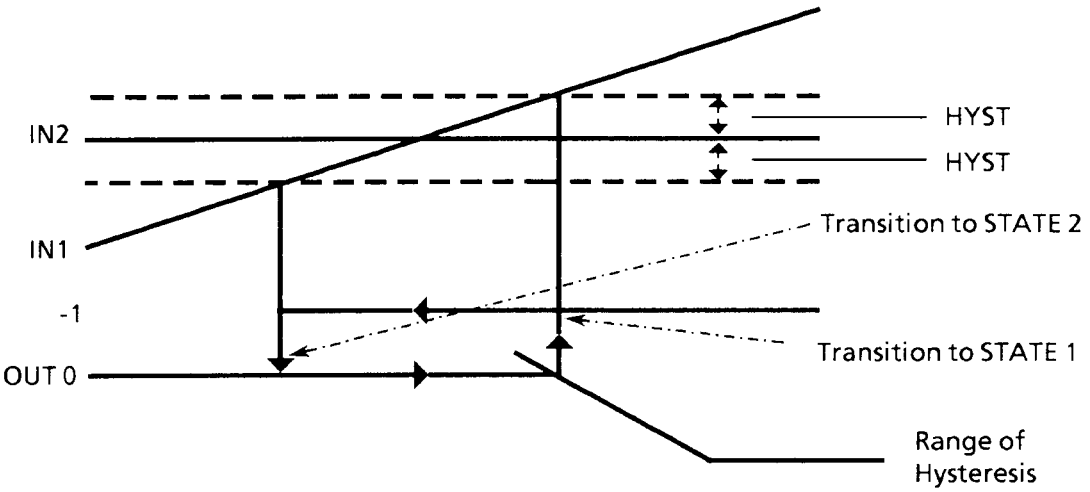

9-2.3.14 DELAY

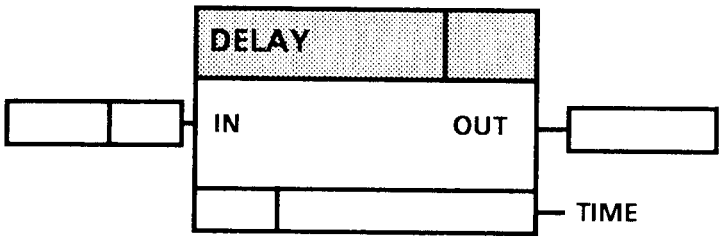

Figure 9-19. DELAY BLOCK

Figure 9-19 Legend

Pin	Type	Pin Description
IN	IL	Input
OUT	ON	Output
TIME	PN	Delay Time

The Delay Block holds an Output signal for a preset amount of time before it is released. When IN = 0, the OUT is 0. When IN = -1, the Output is delayed for the delay period set at TIME. Time is in multiples of 210 ms (10 = 2.1 sec.)

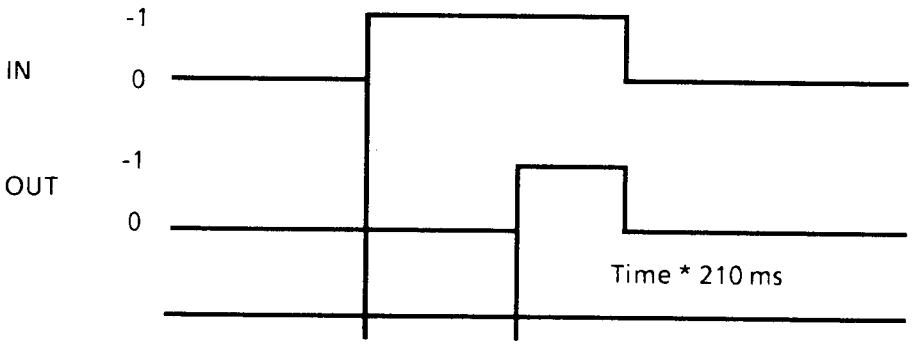

9-2.3.15 NUMERICAL LIMITER

Figure 9-20 Legend

Pin	Type	Pin Description
IN	IN	Input
OUT	ON	Output
MIN	PN	Lower Limit
MAX	PN	Upper Limit

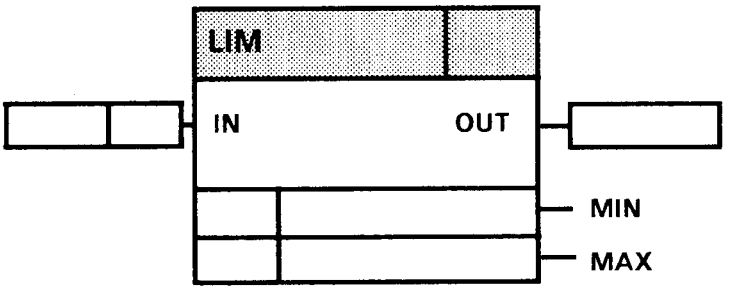

Figure 9-20. NUMERICAL LIMITER Block

The Numerical Limiter Block sets upper and lower limits. When the Input figure is less than the preset minimum, the Output is the lower limit figure. When the Input figure is greater than the preset maximum the upper limit figure is the Output. When the input figure is between the limits, the Output is the Input figure.

9-2.3.16 PFC

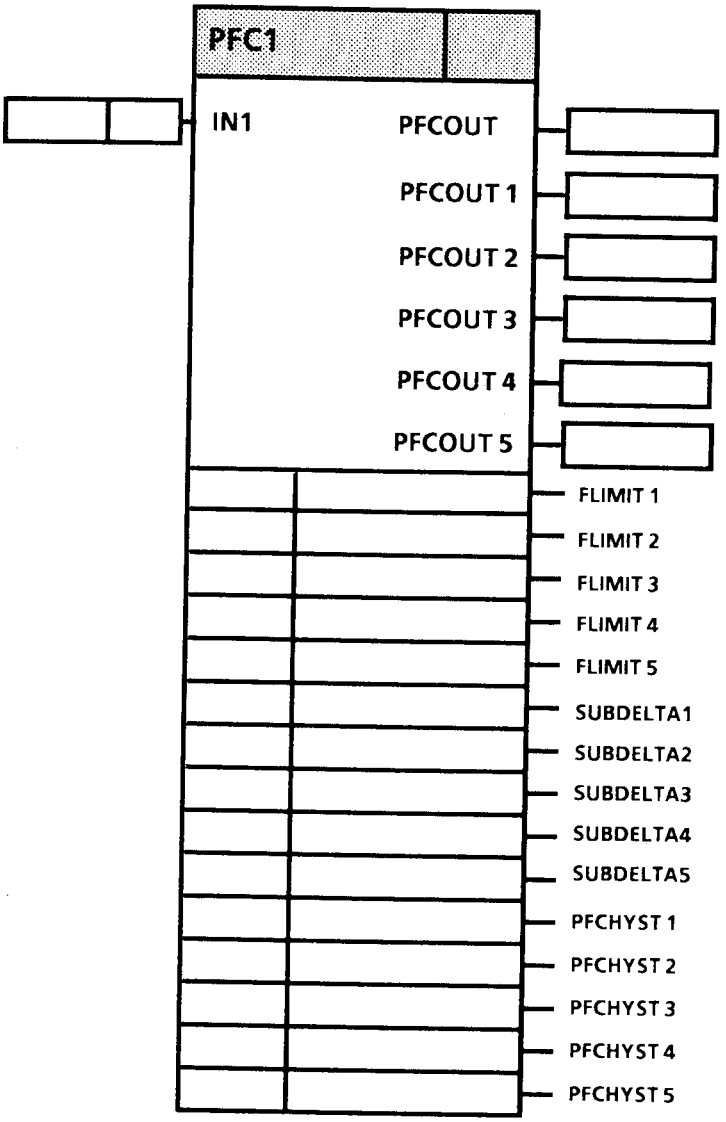

Figure 9-21. PFC Block

Figure 9-21 Legend

Pin	Type	Pin Description
IN1	IN	Block Input
PFCOUT	ON	Output
PFCOUT1 -	OL	Outputs 1...5
PFCOUT5	OL	
FLIMIT1 -	PN	Ref. Limits 1...5
FLIMIT5	PN	
SUBDELTA1	PN	Subtrahends 1...5
SUBDELTA5	PN	
PFCHYST1 -	PN	Hystereses 1...5
PFCHYST5	PN	

The PFC Block takes one input, compares it to limits, factors in hysteresis and determines the signals to be output at five separate outputs. The PFC block is useful in controlling multiple machines and functions.

$$PFCOUT = IN1 - (\Sigma \text{ subdelta } 1 \ldots\ldots \text{subdelta } 5)$$

9-2.3.17 FILTER

Figure 9-22 Legend

Pin	Type	Pin Description
IN	IN	Input
OUT	ON	Output
TIME	PN	Lower Limit
		Filter Time
		Constant 0.1s

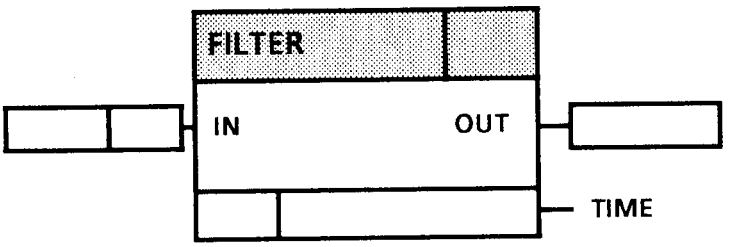

Figure 9-22. FILTER Block

The Filter Block is a Low-Pass filter that filters in a time constant unit of tenths of a second. If a filtering time constant of 10 seconds was desired, 100 would be entered at TIME.

9-2.3.18 INTEGRATOR

Figure 9- 23 Legend

Pin	Type	Pin Description
IN	IN	Input
OUT	ON	Output
RES	IL	Integrator Reset
PASS	IL	Integrator Bypass
MAX	PN	Upper Output Limit
MIN	PN	Lower Output Limit
TACC	PN	Accel. Time S.
TDEC	PN	Decel Time S.

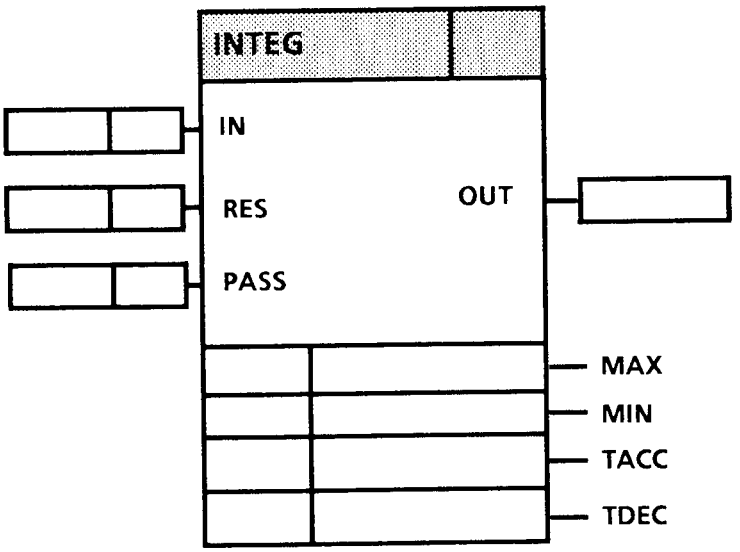

Figure 9-23. INTEGRATOR Block

The INTEG Block is a integrator located between the Min and Max limits that acts as a ramp. The INTEG Block can be bypassed using the RES or PASS pins. When RES is not equal to 0, clamping will take place and the output will equal 0. When Pass is not equal to 0, bypass will take place and the output will be the Input figure.
TACC = Aceleration time in seconds 0 ... + 20000
TDEC = Deceleration time in seconds ± 20000 ...0.

When PASS = -1 , OUT = INPUT
When RES = -1, OUT is clamped to <u>ZERO</u>

9-2.3.19 PI - CONTROLLER

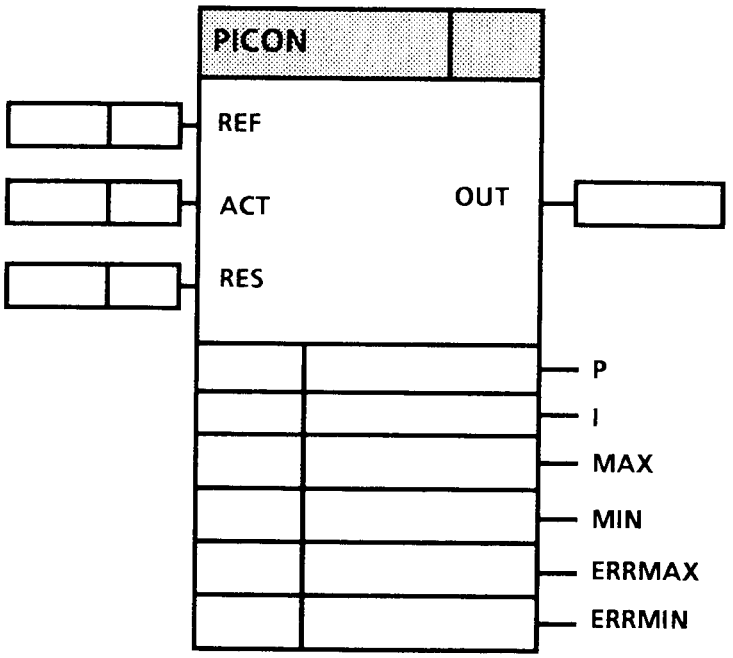

Figure 9-24. PI - CONTROLLER Block

Figure 9-24 Legend

Pin	Type	Pin Description
REF	IN	Reference Value
ACT	IN	Actual Value
RES	IL	Controller Reset
OUT	ON	Output
P	PN	P - gain (%)
I	PN	Integr. Time in 0.1s
MAX	PN	Upper Outer Limit
MIN	PN	Lower Outer Limit
ERRMAX	PN	Error Value Upper Limit
ERRMIN	PN	Error Value Lower Limit

The PI-Controller Block sums between a reference and a feedback signal by executing the digital algorithm shown below:

$OUT_{n+1} = OUT_n + P_{part} + I_{part}$
Ppart = P / 100 x (ERRn + 1 - ERRn)
Ipart = P / 100 x TVAL x ERRn + 1 / I x 100
ERRn + 1 = REF - ACT
n = Value given in cycle n
TVAL = 210 ms

9-2.3.20 UP/DOWN COUNTER

Figure 9-25 Legend

Pin	Type	Pin Description
UP	IL	Up Count
DOWN	IL	Down Count
SEL	IL	Increment Select.
ZERO	IL	Zeroing of Output
OUT	ON	Output
DELTA1	PN	Slow Increment
DELTA2	PN	Fast Increment
MAX	PN	Upper Count Limit
MIN	PN	Lower Count Limit

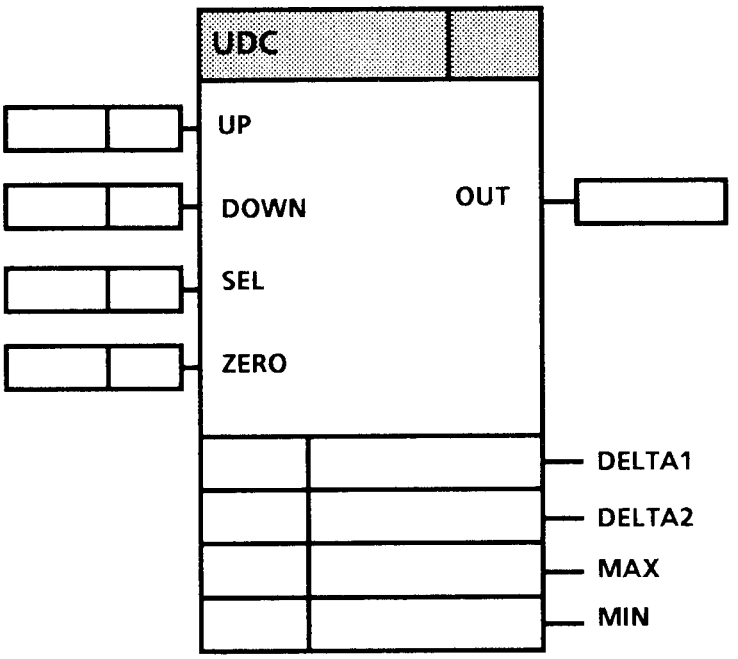

Figure 9-25. UDC Block

The Up/Down Counter Block adds or subtracts the Delta value from its output at the rate selected by SEL at 210 ms. intervals. When the upper or lower count limit is reached, that becomes the output figure.

ZERO	UP	DOWN	OUT
-1	X	X	0
0	0	0	OUT_n
0	0	-1	OUT - DELTA
0	-1	0	OUT + DELTA
0	-1	-1	OUT - DELTA

SEL	DELTA
0	DELTA1
-1	DELTA2

9-2.3.21 DIGITAL INPUT

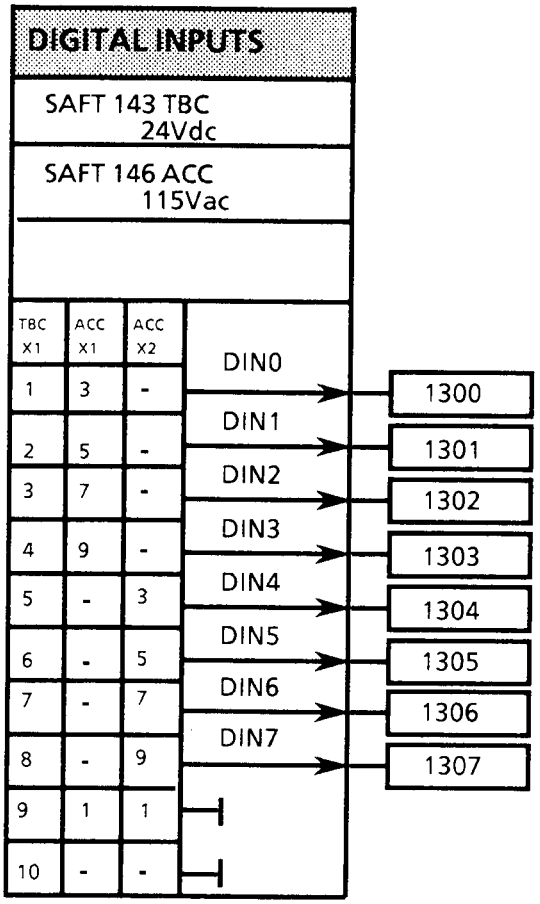

Figure 9-26. Digital Inputs Block

Figure 9-26 Legend

Pin	Type	Pin Description
DINO	OL	State of Input Bit 0
DIN1	OL	State of Input Bit 1
DIN2	OL	State of Input Bit 2
DIN3	OL	State of Input Bit 3
DIN4	OL	State of Input Bit 4
DIN5	OL	State of Input Bit 5
DIN6	OL	State of Input Bit 6
DIN7	OL	State of Input Bit 7

The Digital Inputs Block allows input of digital data. The SAFT 143 TBC or SAFT 146 ACC supplies an 8 - Bit digital input to Table Address 245. The Digital Input Block unpacks this data and transmits it to the corresponding output parameter locations (ie. Bit 1 = 1300; Bit 2 = 1301, etc.). These output parameters can then be used as inputs to other Function Blocks. When an input is activated (ie. contact closure) the corresponding output is -1, when not active (open contact) the output value is 0.

The table addresses are given in the schematic block drawing.

9-2.3.22 ANALOG INPUTS

Figure 27 -29 Legend

Pin	Type	Pin Description
OUT	ON	Scaled Output
MAX	PN	Upper Output Limit
MIN	PN	Lower Output Limit

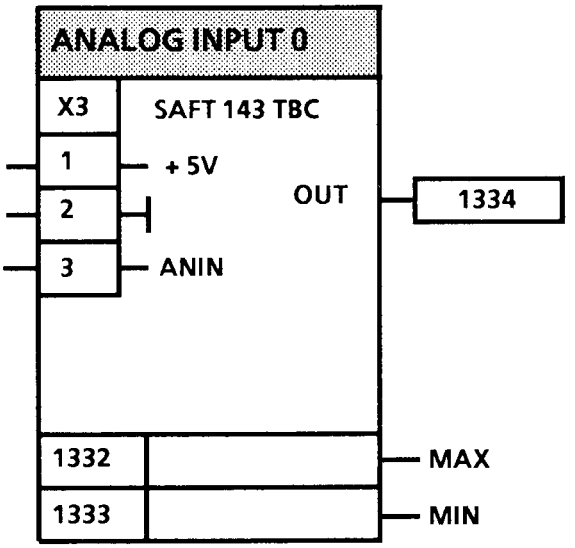

Figure 9-27. Analog Inputs Block 0

The ANALOG INPUTS? block scales the value (0 - 255) after A/D conversion to an output value (OUT) of the desired magnitude.

MAX - Corresponds to the maximum value of the OUT output.

MIN - Corresponds to the minimum value of the OUT output.

ANALOG INPUT (0) - Analog input to address 246 from the SAFT 143 TBC.

ANALOG INPUT (1) - Analog input to address 250 from the SAFT 149 INP card.

ANALOG INPUT (2) - Analog input to address 251 from the SAFT 149 INP card.

The pin addresses are given in the schematic block representations in Figures 9-27 - 9-29.

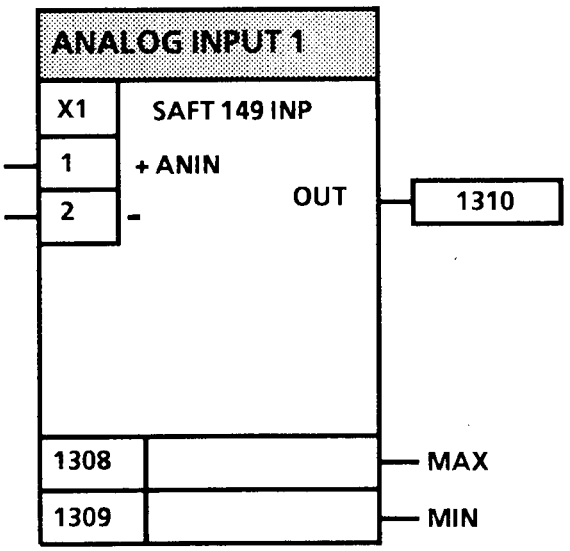

Figure 9-28. Analog Input Block 1

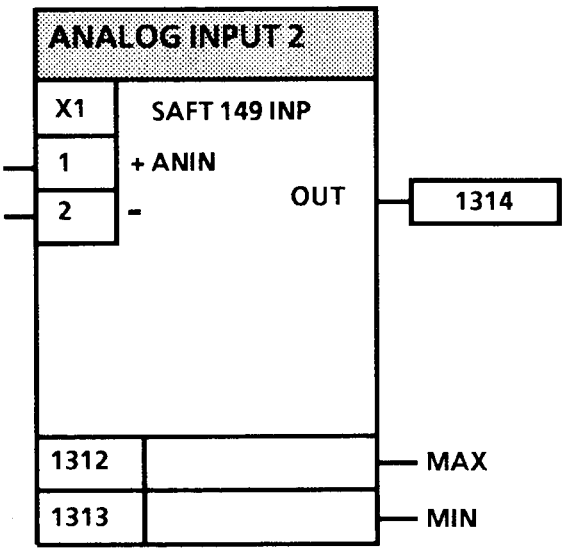

Figure 9-29. Analog Input Block 2

9-2.3.23 ANALOG OUTPUTS

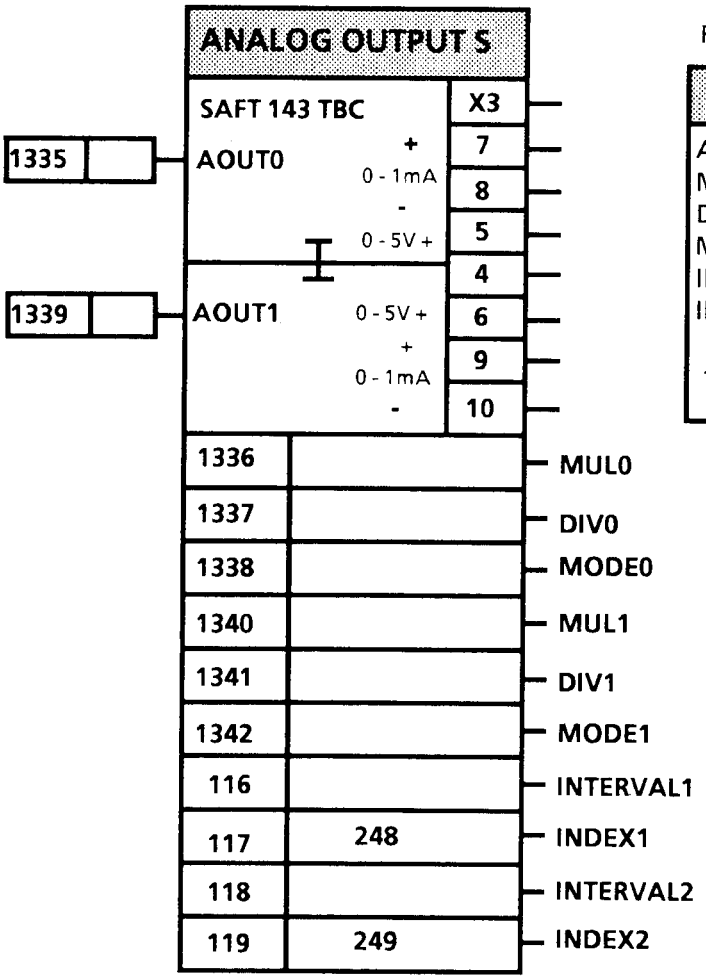

Figure 9-30. Analog Outputs Block

Figure 9-30 Legend

Pin	Type	Pin Description
AOUT?	IN	Output Signal Addr.
MUL?	PN	Scaling Factor (See Sec. 4-3.7)
DIV?	PN	Scaler (See Sec. 4-3.7)
MODE?	PN	Mode Selection
INTERVAL?	PN	Transmission Interval
INDEX?	PN	Address of variable to be transmitted
? = 1 or 2		

The ANALOG OUTPUTS block is used to transmit an output to the TBC card. The block scales the signal to be transmitted to the D/A convertor so it is limited to the range 0 -- 255.

When MODE = 0, then scaling of positive values occurs.(0-255; if Input < 0, OUT = fullscale)
When MODE = 1, then scaling of signed values occurs. (-127 to 128)
When MODE = 2, then scaling of the Absolute Value occurs. (0-255; MAXINPUT = [(-1) x MININPUT]

INTERVAL? determines the time interval at which the inverter unit transmits the desired variable.
When INTERVAL? = 0, no transmission occurs.
When INTERVAL? = 1, Transmission occurs at 20 ms. intervals.
When INTERVAL? = 2, Transmission occurs at 40 ms. intervals etc., etc.

Important: To avoid overloading the serial communications, INTERVAL? should not be set less than 4 (80 ms) transmission intervals.

INDEX? is the communications table address of the variable to be transmitted to the D/A convertor.
ANALOG OUTPUT (0) address is 248.
ANALOG OUTPUT (1) address is 249.

9-2.3.24 DIGITAL OUTPUTS 0

Figure 9-31. Legend

Pin	Type	Pin Description
DOUT0	IN	Addr.of Output Bit 0
DOUT1	IN	Addr.of Output Bit 1
DOUT2	IN	Addr.of Output Bit 2
DOUT3	IN	Addr.of Output Bit 3
INTERVAL0	PN	Transmission Interval
INDEX0	PN	Address of variable to be transmitted

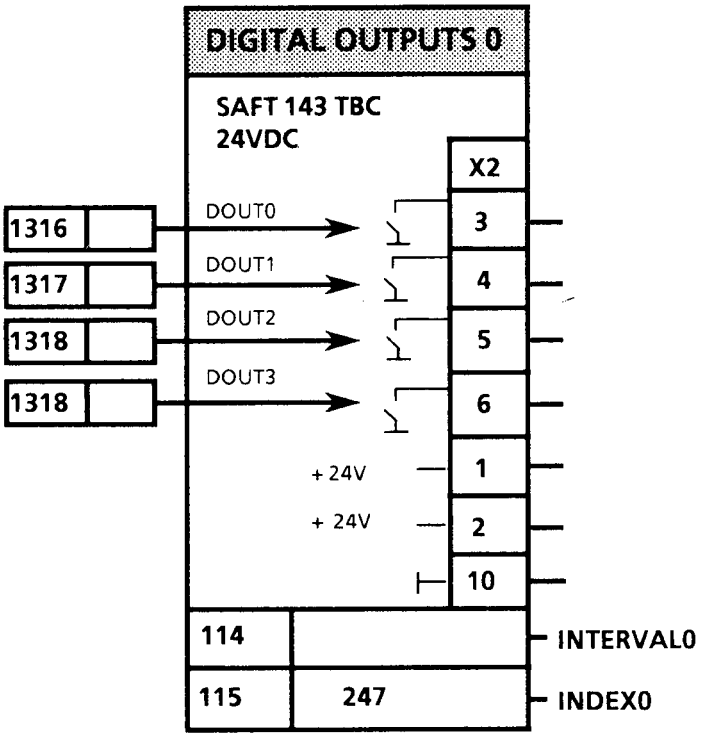

Figure 9-31. Digital Outputs 0 Block

The DIGITAL OUTPUTS 0 block provides a Digital output to the SAFT 143 Terminal Block Card. The table place addresses to be transferred to Output 247 are set to table places DOUT0 -- DOUT3. INDEX0 is the address 247 of the variable to be transmitted. INTERVAL0 determines the time interval at which the inverter unit transmits the desired variable over the serial channel.

0 = No transmission
1 = Transmission at 20ms interval
2 = Transmission at 40 ms interval etc. etc.

Table addresses OUT0 - - OUT3 can be used to monitor the output state bit by bit.
0 = Switch open
-1 = Switch closed

Pin addresses are given in the schematic block representations.

Table 9-4

Bit	Table Address
OUT0	1324
OUT1	1325
OUT2	1326
OUT3	1327

9-2.3.25 DIGITAL OUTPUTS 1

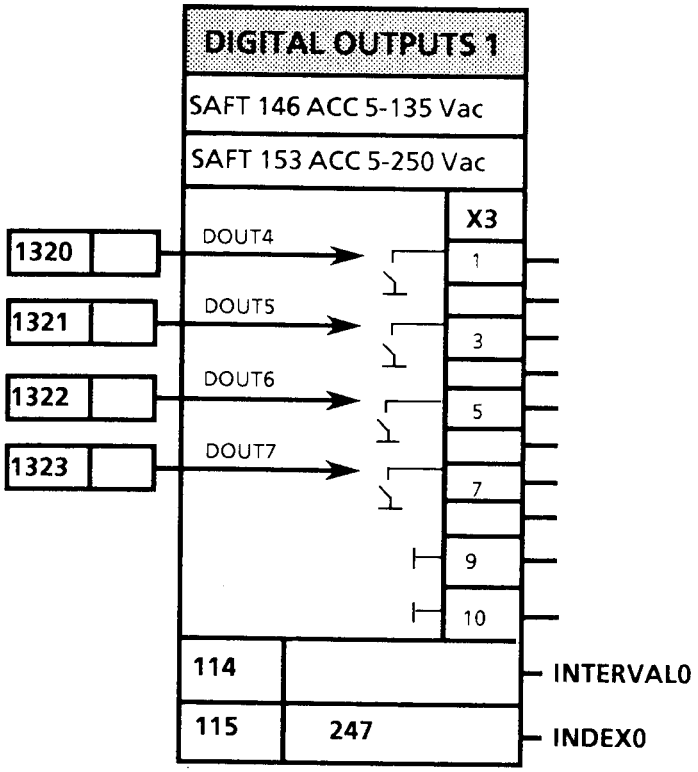

Figure 9-32. Digital Outputs 1 Block

Figure 9-32. Legend

Pin	Type	Pin Description
DOUT4	IN	Addr.of Output Bit 4
DOUT5	IN	Addr.of Output Bit 5
DOUT6	IN	Addr.of Output Bit 6
DOUT7	IN	Addr.of Output Bit 7
INTERVAL0	PN	Transmission Interval
INDEX0	PN	Address of variable to be transmitted

The DIGITAL OUTPUTS 1 block provides a Digital output to the SAFT 146 ACC or SAFT 153 ACC cards. The table place addresses to be transferred to Output 247 are set to table places DOUT4 -- DOUT7. INDEX0 is the address 247 of the variable to be transmitted. INTERVAL0 determines the time interval at which the inverter unit transmits the desired variable over the serial communication channel.

0 = No transmission
1 = Transmission at 20ms interval
2 = Transmission at 40 ms interval etc. etc.

Tables Addresses OUT4 - - OUT7 can be used to monitor the output state bit by bit.
0 = Switch open
-1 = Switch closed

Pin addresses are given in the schematic block representations.

Table 9-5

Bit	Table Address
OUT4	1328
OUT5	1329
OUT6	1330
OUT7	1331

9-2.3.26 SCALAR

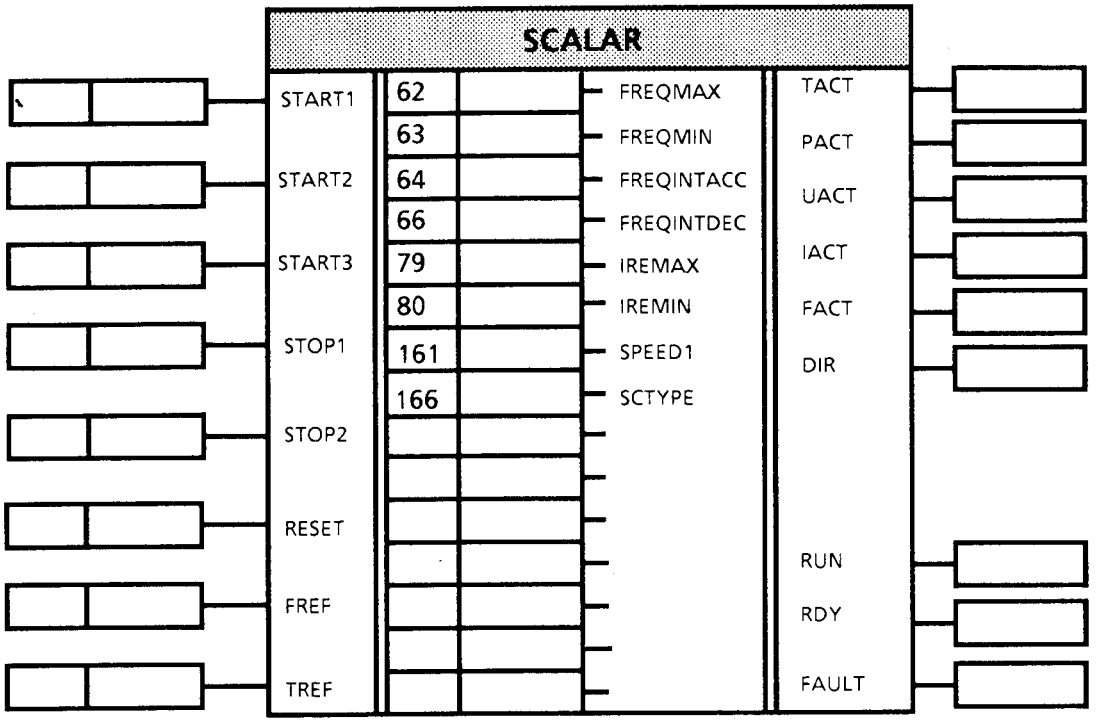

Figure 9-33. Scalar Control Block

Figure 33. Legend

PIN	TYPE	PIN DESCRIPTION
START 1	IL	Start connection to address 2, when the signal value is not equal to 0 the Freq. Ref. is obtained from address 29.
START 2	IL	Start connection to address 24, when the signal value is not equal to 0 the Freq. Ref. is obtained from address 161.
START 3	IL	Start connection to address 25, when the signal value is not equal to 0 the Freq. Ref is obtained from address 162.
STOP 1	IL	Stop request to address 3 when the signal value is not equal to 0 the inverter lowers the frequency to zero and stops.
STOP 2	IL	Inverter power off to address 22, when the signal value is not equal to 0 the drive stops immediately.
RESET	IL	Fault reset to address 12, when the signal value is not equal to 0 the drive faults are reset.
FREF	IN	Frequency reference to address to address 29
TREF	IN	Torque reference to address 26
FACT	ON	Frequency actual value from address 208, in cHz.
IACT	ON	Total drive output current, in 0.1% of the rated current.
TACT	ON	Torque actual value from address 202, in 0.1% of the rated current.
PACT	ON	Active inverter power, in 0.1% of the rated value.
UACT	ON	Actual value of the drive output voltage, in 0.1% of the rated value.

Figure 33. Legend

PIN	TYPE	PIN DESCRIPTION
RUN	OL	Inverter running
RDY	OL	Inverter ready for start
FAULT	OL	Fault in the inverter
DIR	OL	Direction Indication; 0 = positive. The motor rotates clockwise at the positive frequency reference.
FREQMAX	PN	Upper frequency reference limit in .cHz
FREQMIN	PN	Lower frequency reference limit in .cHz
FREQINTACC	PN	Frequency Reference integration time (s) 0 --100 Hz
FREQINTDEC	PN	Frequecy Reference integration time (s) 100 -- 0 Hz
IREMAX	PN	Torque limit in motor operation
IREMIN	PN	Torque limit in generator operation
SPEED1	PN	Frequency reference, when the content of address START2 is not equal to 0.
SC TYPE	PN	16-bit wide control word for scalar control, for mode selection.

BIT			
0	IR Compensation	00	no compensation
1	IR Compensation	01	Mode 1
		11	Mode 2 (For High Inertia Loads)
2	Stall Protection	1/0	On/Off

The Scalar block sets the final commands for Inverter unit operation using feedback from the drive unit, in addition to inputs from the Display and Functional blocks .

9-2.3.27 CP1 BUTTONS

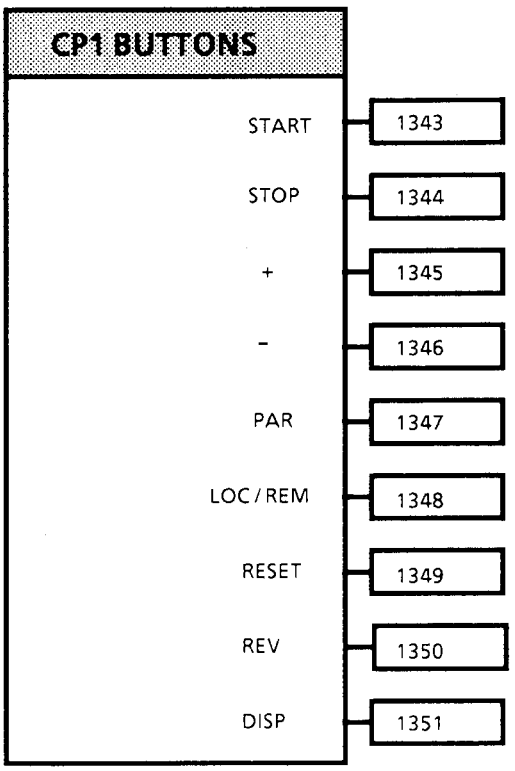

Figure 9-34. CP1 Buttons Block

Figure 9- 34 Legend

Pin	Type	Pin Description
START	OL	
STOP	OL	
PLUS	OL	
MINUS	OL	
PARAM	OL	
LOC/REM	OL	
RES	OL	
REV	OL	
DISP	OL	

The CP1 Buttons Block sets the state of the control panel pushbuttons. The state of the pushbuttons can be monitored at a given table place. When a button is pushed, the table state becomes a -1 . When a button is not activated, the corresponding table state is a 0. The panel pushbutton word is located at parameter 19.

9-2.3.28 TRANSFER0

Figure 9- 35 Legend

Pin	Type	Pin Description
S0	PN	Source Address
S1	PN	Source Address
S2	PN	Source Address
S3	PN	Source Address
S4	PN	Source Address
S5	PN	Source Address
S6	PN	Source Address
S7	PN	Destination Address
D0	PN	Destination Address
D1	PN	Destination Address
D2	PN	Destination Address
D3	PN	Destination Address
D4	PN	Destination Address
D5	PN	Destination Address
D6	PN	Destination Address
D7	PN	Destination Address

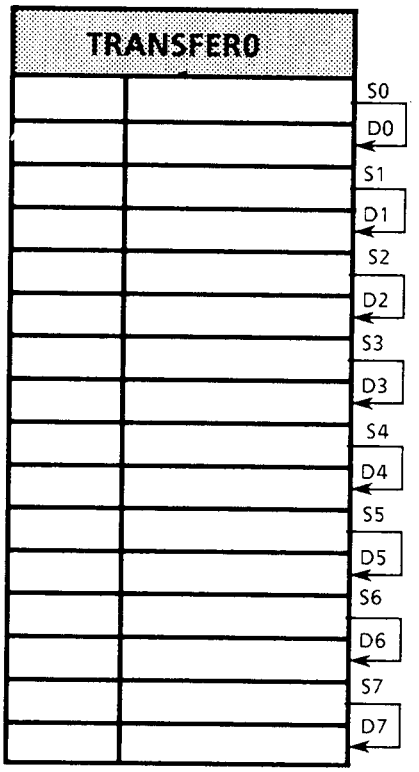

Figure 9-35. Transfer 0 Block

The TRANSFER0 Block is a data transfer block that transfers the contents of the source addresses (S0 - S8) to the table places indicated by the destination addresses (D0 - D8). When the Destination address (D?) = 0 , transfer does not take place.

9-2.3.29 CONSTANT0

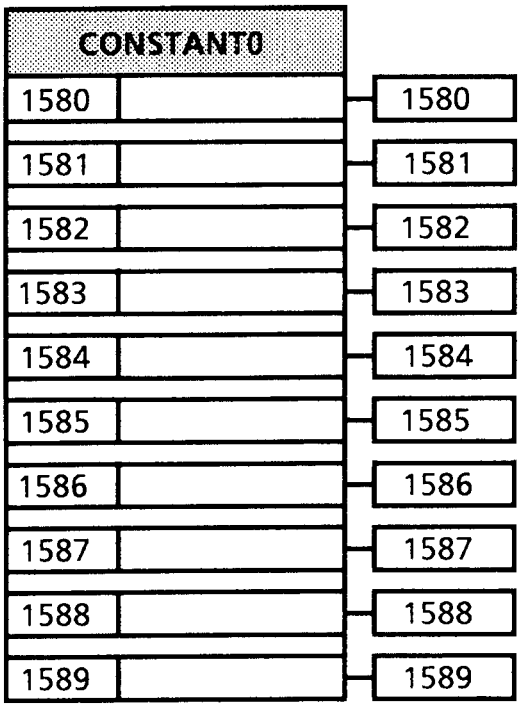

Figure 9-36. Constant 0 Block

Figure 9- 36 Legend

Pin	Type	Pin Description
1	ON	Output Address
2	ON	Output Address
3	ON	Output Address
4	ON	Output Address
5	ON	Output Address
6	ON	Output Address
7	ON	Output Address
8	ON	Output Address
9	ON	Output Address
10	ON	Output Address

The CONSTANT0 Block is a storage block that acts as a library for constant values. The block contains 10 table places in which constant values can be set. These constants can be connected to the input of another block using normal pin connections when they are needed.

Pin addresses are given in the schematic block representation.

9-2.3.30 CP2 BUTTONS

Figure 37 Legend

Pin	Type	Pin Description
FO	OL	FUNCTION PUSHBUTTON
START	OL	START
STOP	OL	STOP
PLUS	OL	INCREMENT
FAST	OL	FASTER
MINUS	OL	DECREMENT
F1	OL	FUNCTION PUSHBUTTON
F2	OL	FUNCTION PUSHBUTTON
F3	OL	FUNCTION PUSHBUTTON
PAR	OL	PARAMETER MODE
CNTR	OL	CONTROL PUSHBUTTON
RESET	OL	RESET

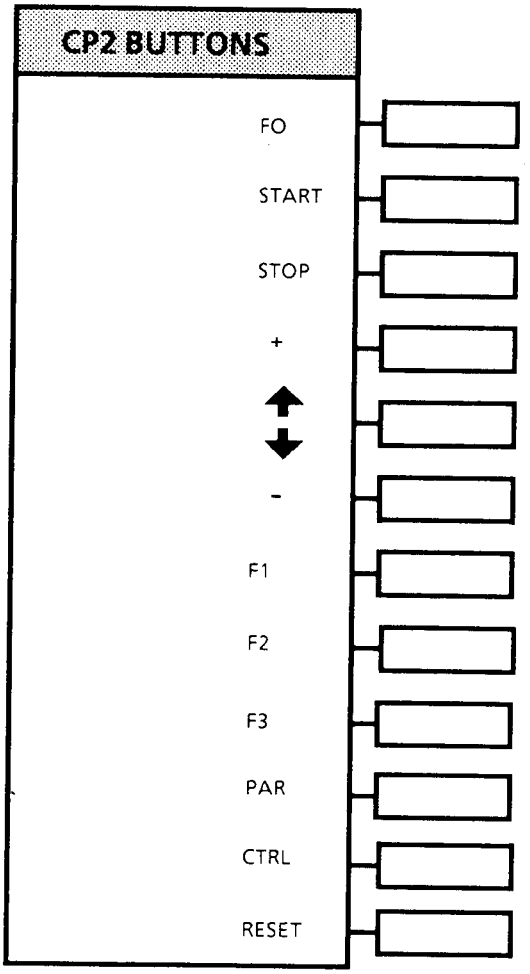

Figure 37. CP2 Buttons Block

The CP2 Buttons Block sets the state of the control panel 2 pushbuttons. The state of the pushbuttons can be monitored at a given table place. When a button is pushed, the table state becomes a -1 . When a button is not activated, the corresponding table state is a 0. The panel pushbutton word is located at address 23.

9-2.3.31 CP2 ADDER

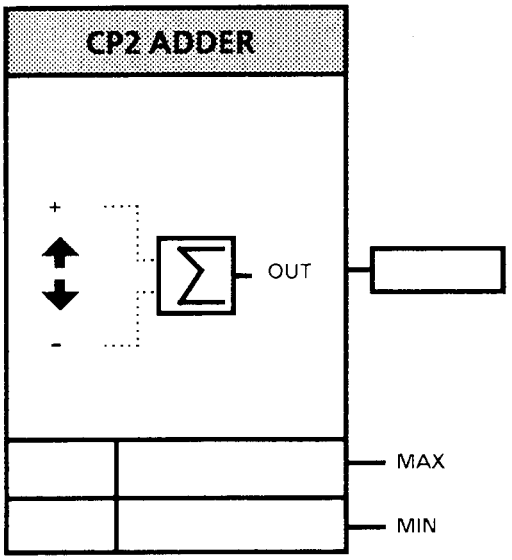

Figure 38. CP2 ADDER Block

Figure 38. Legend

Pin	Type	Pin Description
OUT0	ON	ADDER OUTPUT
MAX	PN	UPPER ADDER LIMIT
MIN	PN	LOWER ADDER LIMIT

The CP2 ADDER block changes the increment value of the CP2 pushbuttons so that the adder output of OUT changes as follows:

Pushing the (+) button increments OUT by +1.

Pushing the (+) button, and then the arrow button causes OUT to increment by +10.

Pushing the (+) button and the arrow button simultaneously causes OUT to increment by +100.

Pushing the (-) button decrements OUT by -1.

Pushing the (-) button and then the arrow button decrements OUT by -10.

Pushing the (-) button and the arrow button simultaneously decrements OUT by -100.

MAX determines the upper limit value , and MIN the lower limit value of the OUT output.

9-2.3.32 CP2 DISPLAYS

Figure 39. Legend

Pin	Type	Pin Description
DISPSRCO	IN	Addr. of Displayed Data
DISPSRC1	IN	Addr. of Displayed Data
DISPSRC2	IN	Addr of Displayed Data
DISPMUL0	PN	Scaling Factor
DISPMUL1	PN	Scaling Factor
DISPMUL2	PN	Scaling Factor
DISPDIV0	PN	Scalar
DISPDIV1	PN	Scalar
DISPDIV2	PN	Scalar
DISPPNT0	PN	Place of Decimal Point
DISPPNT1	PN	Place of Decimal Point
DISPPNT2	PN	Place of Decimal Point
SIGN	PN	Sign of the Displays

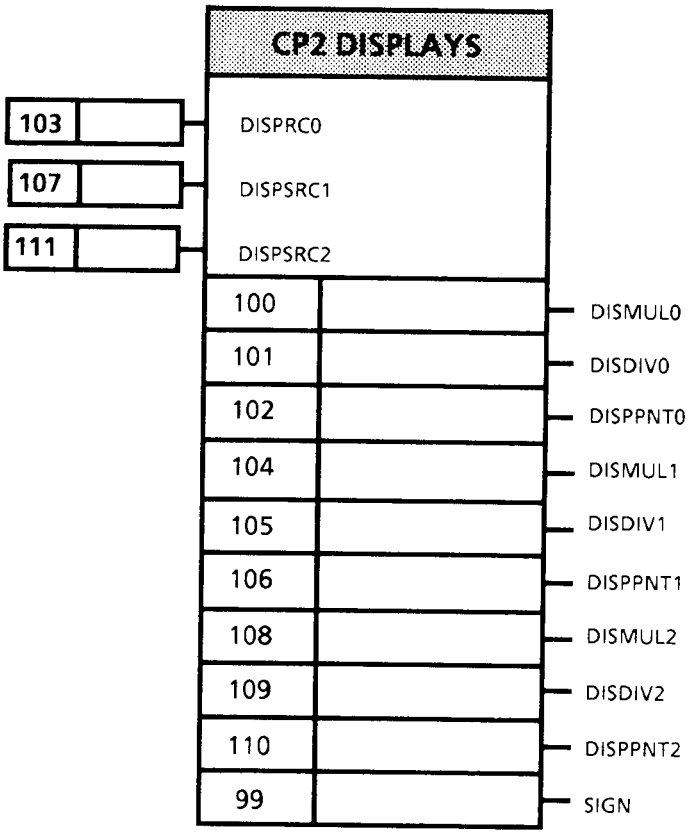

Figure 39. CP2 DISPLAYS Block

The CP2 DISPLAYS block controls the scaling, values and signs of the 16 character alphanumeric display as follows:

The 16 character wide display is divided into three separate fields, with the numeric character appearing in the pin name referring to these fields.

0 = Left Field
1 = Middle Field
2 = Right Field

The addresses of the TABLE PLACES contents which will be scaled and displayed, are set in table places DISPSRCO, DISPSRC1 and DISPSRC2.

The value of DISPPNT determines the place of the decimal point as follows:

DISPPNT = 0, no decimal point
DISPPNT = 1, division by 10.
DISPPNT = 2, division by 100
DISPPNT = 3, division by 1000

The SIGN parameter determines the signs of all displays.

If SIGN = 0, the displays are positive (+XXX)
If Sign = 1, the displays are negative (- XXX)

Pin addresses are given in the schematic block representation.

9-2.3.33 CP2 DIGITAL INPUTS

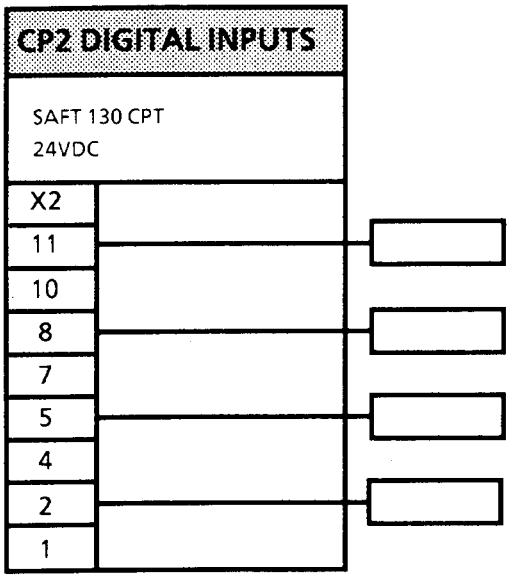

Figure 40. CP2 DIGITAL INPUTS Block

Figure 40. Legend

Pin	Type	Pin Description
DIN0	OL	STATE OF INPUT BIT 0
DIN1	OL	STATE OF INPUT BIT 1
DIN2	OL	STATE OF INPUT BIT 2
DIN3	OL	STATE OF INPUT BIT 3

The CP2 DIGITAL INPUTS Block is used for digital data input. The SAFT 130 CPT card supplies a 4-bit digital input to COMMUNICATION TABLE address 15. The CP2 DIGITAL INPUTS block transmits information about the state of each pin to the table (DIN0.....DIN3). When a pin has no voltage, the corresponding input is 0. When a pin has voltage, the corresponding input is -1.

9-2.3.34 CP2 ANALOG INPUT

Figure 41. Legend

Pin	Type	Pin Description
OUT	ON	Scaled Output
MAX	PN	Upper Output Limit
MIN	PN	Lower Output Limit

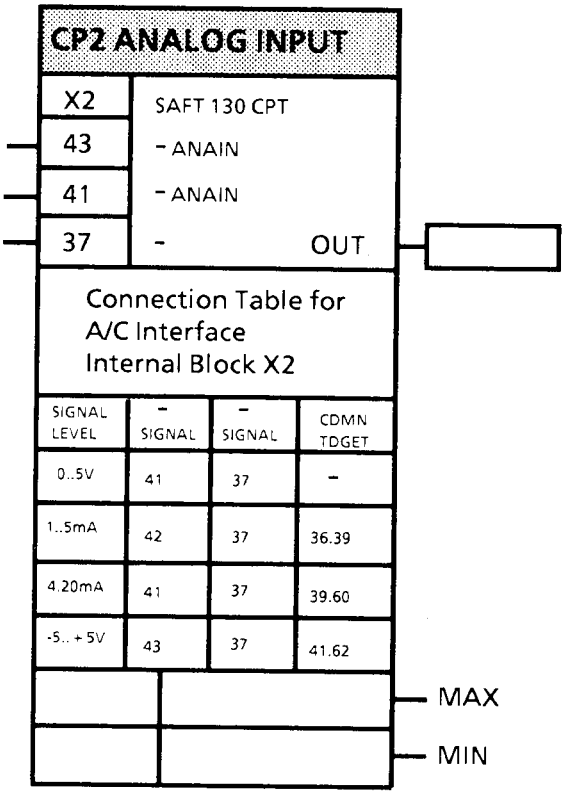

Figure 41. CP2 ANALOG INPUT Block

The CP2 ANALOG INPUT Block provides an analog input from the SAFT130 CPT card. The CP2 ANALOG INPUT block scales the value (0 ...255) after A/D conversion to an output value (OUT) of the desired magnitude. The value to be scaled is contained in the communication table address 14.

MAX = The maximum value of the OUT output.
MIN = The minumum value of the OUT output.

For Example: After A/D conversion, the content of address 14 varies between 0 and 255. If it is scaled so that 0 corresponds to - 15000 and 255 to +15000. Value MAX is then set at 15000 and MIN at -15000.

9-2.3.35. CP2 DIGITAL OUTPUTS

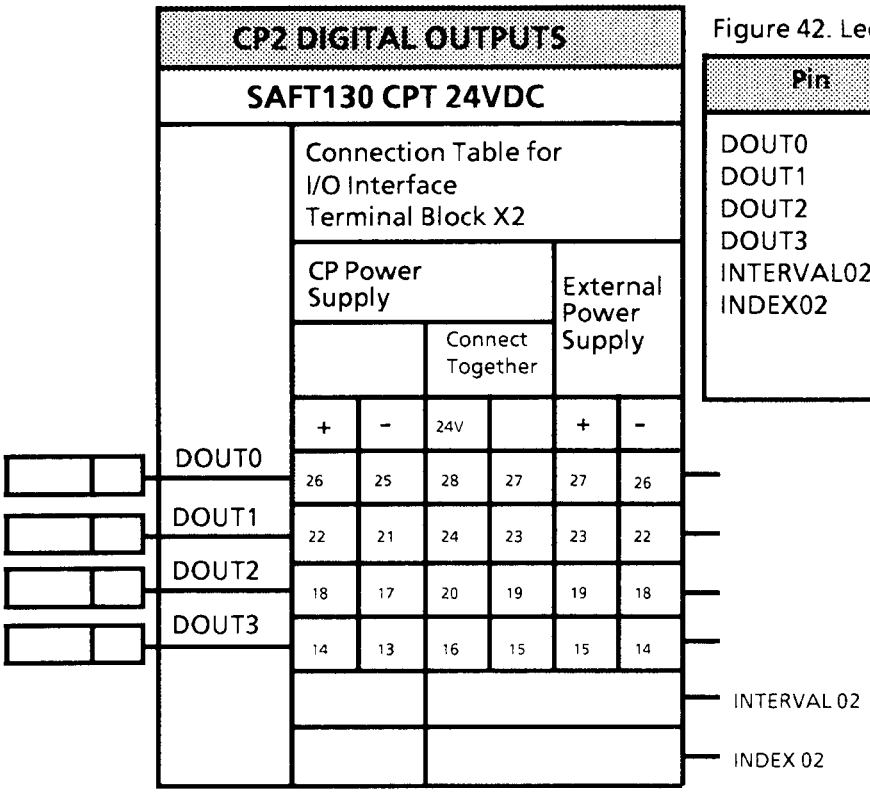

Figure 42. CP2 DIGITAL OUTPUTS Block

Figure 42. Legend

Pin	Type	Pin Description
DOUT0	IN	Addr. of Output Bit 0
DOUT1	IN	Addr. of Output Bit 1
DOUT2	IN	Addr. of Output Bit 2
DOUT3	IN	Addr. of Output Bit 3
INTERVAL02	PN	Transmission Interval
INDEX02	PN	Address of variable to be transmitted.

The CP2 DIGITAL OUTPUTS Block provides a Digital output to the SAFT 120 CPT card from address 213. The table place addresses that are to be transferred to output 213 are set to table places DOUT0....DOUT3.

INTERVAL02 determines the time interval for the inverter unit to transmit the desired variable as follows:

0 = No transmission
1 = Transmission at 20ms intervals
2 = Transmission at 40ms intervals
etc. etc.

Table addresses OUT0....OUT3 can be used to monitor the output state bit by bit.
0 = Switch Open
-1 = Switch Closed

9-2.3.36 SERIAL COMMUNICATION CONNECTION

Figure 43 Legend

Pin	Type	Pin Description
DATA0	ON	
DATA1	ON	
DATA2	ON	
DATA3	ON	
DATA4	ON	
DATA5	ON	

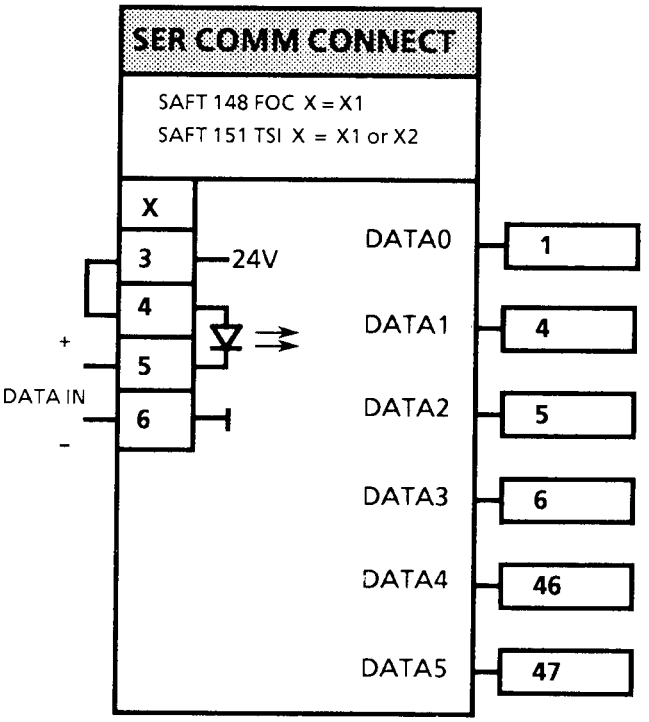

Figure 43. SERIAL COMMUNICATION CONNECTION Block

The SERIAL COMMUNICATION CONNECTION Block allows the A Serial Communication to be connected to the Drive application programs. Six places in the COMMUNICATION TABLE are reserved for Serial Communication, which allows transmission of reference values or other necessary data. The data from the Serial Communication can be connected to the Drive application blocks in the normal manner.

9-2.3.37 SERIAL OUTPUT1

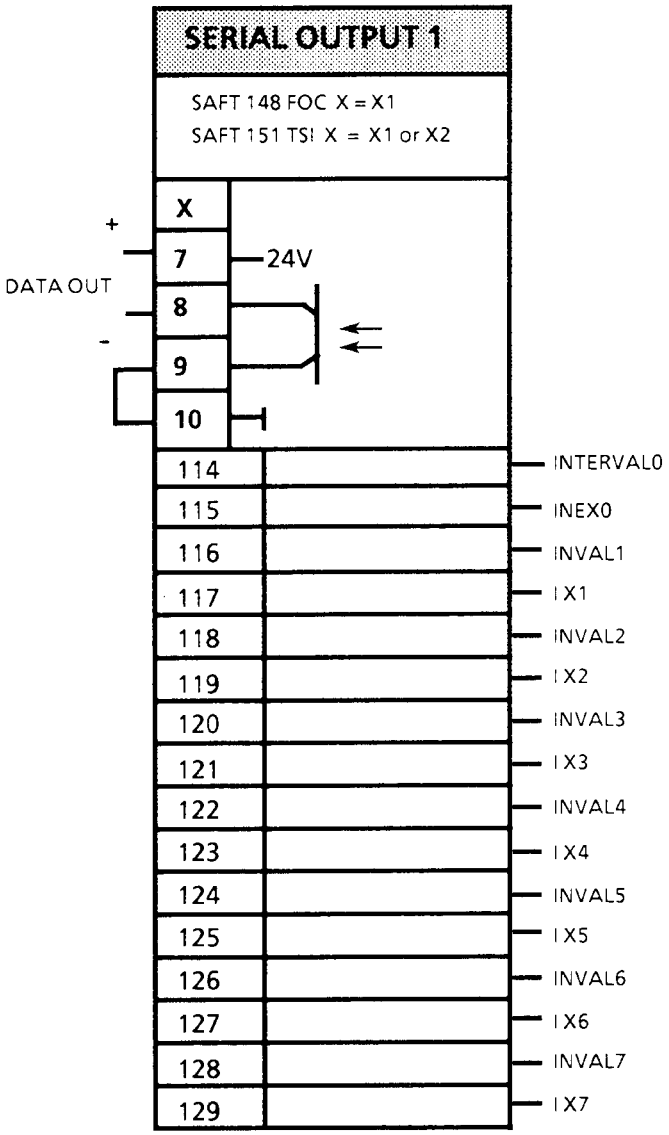

Figure 44. SERIAL OUTPUT 1 Block

Figure 44 Legend

Pin	Type	Pin Description
INTERVAL0	PN	Transmission Interval
INDEX0	PN	Address of Variable to be transmitted
INTERVAL1	PN	
INDEX1	PN	
INTERVAL2	PN	
INDEX2	PN	
INTERVAL3	PN	
INDEX3	PN	
INTERVAL4	PN	
INDEX4	PN	
INTERVAL5	PN	
INDEX5	PN	
INTERVAL6	PN	
INDEX6	PN	
INTERVAL7	PN	
INDEX7	PN	

The SERIAL OUTPUT 1 Block provides data transfer through serial communication. The desired data can be transferred to serial channel 1. INTERVAL0 is the time interval (in multiples of 20ms) at which the inverter transmits the table place content of INDEX0. IVAL1 and IX1 thru IVAL7 and IX7 form the corresponding time interval/transmission address pairs.

9-2.3.38 SERIAL OUTPUT2

Figure 45 Legend

Pin	Type	Pin Description
INTERVAL02	PN	Transmission Interval
INDEX02	PN	Address of Variable to be transmitted
INTERVAL12	PN	
INDEX12	PN	
INTERVAL22	PN	
INDEX22	PN	
INTERVAL32	PN	
INDEX32	PN	
INTERVAL42	PN	
INDEX42	PN	
INTERVAL52	PN	
INDEX52	PN	
INTERVAL62	PN	
INDEX62	PN	
INTERVAL72	PN	
INDEX72	PN	

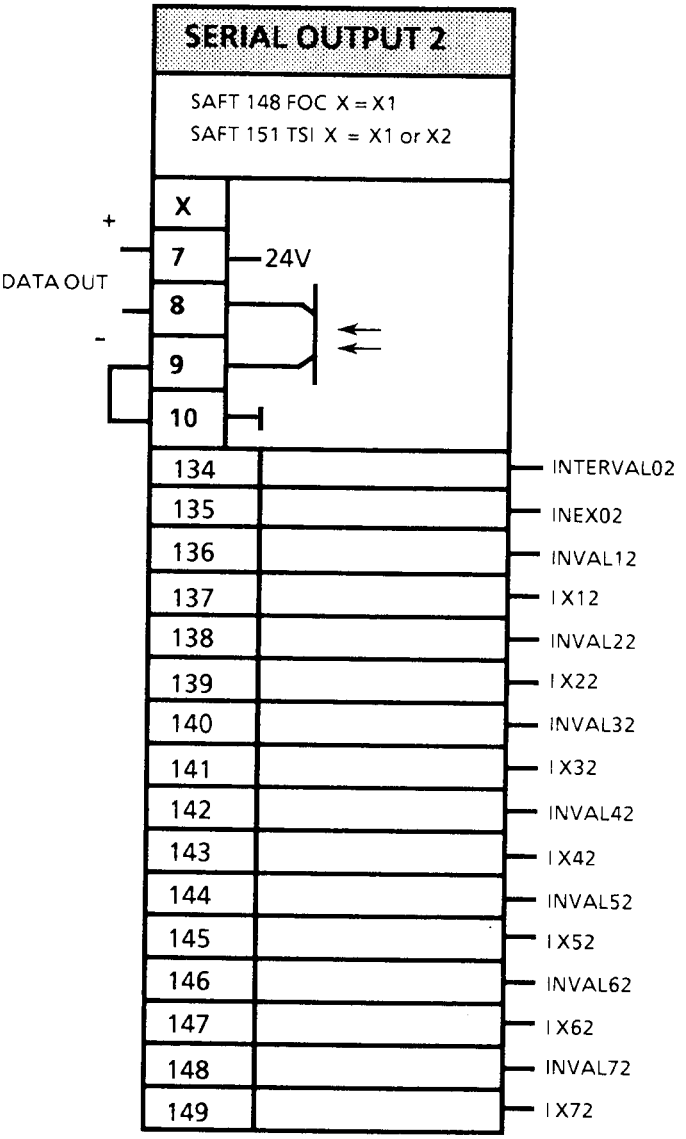

Figure 45. SERIAL OUTPUT 2 Block

The SERIAL OUTPUT 2 Block provides data transfer through serial communication. The desired data can be transferred to serial channel 2. INTERVAL02 is the time interval (in multiples of 20ms) at which the inverter transmits the table place content of INDEX02. IVAL12 and IX12 thru IVAL72 and IX72 form the corresponding time interval/transmission address pairs. The address at IX62 is used as the transmission address for the content of the place defined by IX62. The address at IX72 is used as the transmission address for the content of the place defined by IX72.

9-2.3.39 UNPACK

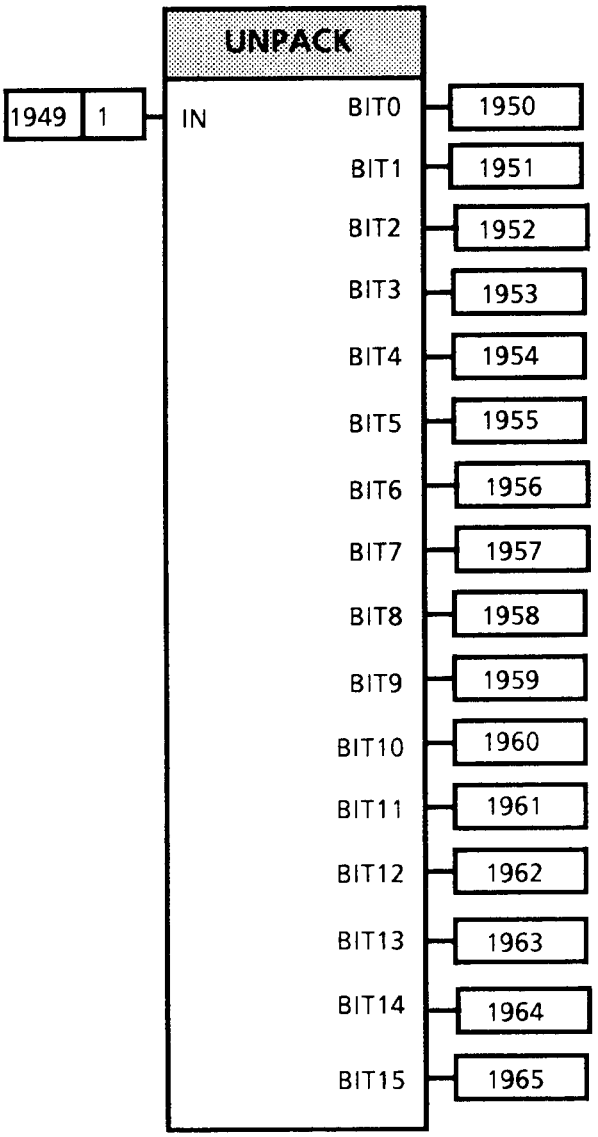

Figure 46. UNPACK Block

Figure 46 Legend

Pin	Type	Pin Description
IN	IN	SOURCE ADDRESS
BIT0	OL	STATE OF BIT
BIT1	OL	
BIT2	OL	
BIT3	OL	
BIT4	OL	
BIT5	OL	
BIT6	OL	
BIT7	OL	
BIT8	OL	
BIT9	OL	
BIT10	OL	
BIT11	OL	
BIT12	OL	
BIT13	OL	
BIT14	OL	
BIT15	OL	

The UNPACK Block is used for unpacking data. The address, whose content is shown for each bit at Table Places BIT0. . .BIT15 respectively, is set to the table place IN. When the packed data bit is in the 0 state, the corresponding output is in the 0 state. Otherwise, the bit is in the -1 state.

IMPORTANT! This functional block is not included in Software SAFRSB2.02 A.

1352 Startup Record & Service Checklist

COMPLETE THE FOLLOWING:

CUSTOMER_____PHONE:(_____)_____

CUSTOMER CONTACT_____

CUSTOMER LOCATION_____

OEM_____ APPLICATION _____

DRIVE ORDER # _____

MAIN POWER TO DRIVE CABINET. (MEASURED) 1-2_____ 2-3 _____1-3 _____

MOTOR MFG. _____ENCLOSURE TYPE_____

MOTOR HP _____ RPM _____ AMP _____VOLT _____ Hz_____POWER FACTOR _____

☐INPUT XFMR PRI _____SEC_____ KVA _____ ☐ TEST RECORD VERIFIED ACCURATE

INVERTER TYPE: SAFUI_____F _____ CONTROL PANEL CP1 ☐ CP2 ☐

MFG. DATE CODE _____CODE_____

SOFTWARE VERSION (D17 & D18 EPROM LABELS) V _____. _____ _____

APPLICATION SOFTWARE: STANDARD ☐ CUSTOM ☐

INDICATE OPTIONS :

☐ FIBER OPTIC CONNECTION CARD ☐ BY-PASS

☐ AC CONNECTION CARD ☐ NEMA12 w/Air Cond

☐ "ANALOG" INPUT CARD

☐ ANALOG REFERENCE RANGE ☐ 0-5VDC ☐ 0-20maDC ☐4-20maDC

AS INSTALLED PARAMETER SETTINGS

62 =	_____	63 =	_____	64 =	_____	65 =	_____	66 =	_____
67 =	_____	68 =	_____	69 =	_____	70 =	_____	79 =	_____
80 =	_____	82 =	_____	83 =	_____	84 =	_____	85 =	_____
161 =	_____	162 =	_____	166 =	_____	191 =	_____	192 =	_____
193 =	_____	194 =	_____	195 =	_____	196 =	_____	197 =	_____
241 =	_____	242 =	_____	243 =	_____	331 =	_____	332 =	_____
333 =	_____	334 =	_____	335 =	_____	351 =	_____	352 =	_____
353 =	_____	354 =	_____	355 =	_____	356 =	_____	367 =	_____
368 =	_____	369 =	_____	370 =	_____	376 =	_____	377 =	_____
378 =	_____	379 =	_____	380 =	_____	381 =	_____	382 =	_____
428 =	_____	435 =	_____	436 =	_____	437 =	_____	438 =	_____
1588 =	_____	1589 =	_____						

☐CHECKED SIGNAL LEADS SHIELDING ☐PROPER MOTOR GROUND

☐FAN OPERATION CORRECT for ALL Sections, INU, CBU, LRU etc.

☐MOTOR AND MOTOR LEADS CHECKED WITH MEGGER:_____OHMS

☐ SET AIR CONDITIONER THERMOSTAT to 80°F (NEMA 12 ONLY)

☐ EXCEPTIONS TO GROUNDING AS FOLLOWS_____

☐ EXTERNAL INTERLOCKS AND CONTROLS AS FOLLOWS: _____

_____

CSS REPRESENTATIVE_____ STARTUP DATE _____

AREA SERVICE CENTER LOCATION _____PHONE _____

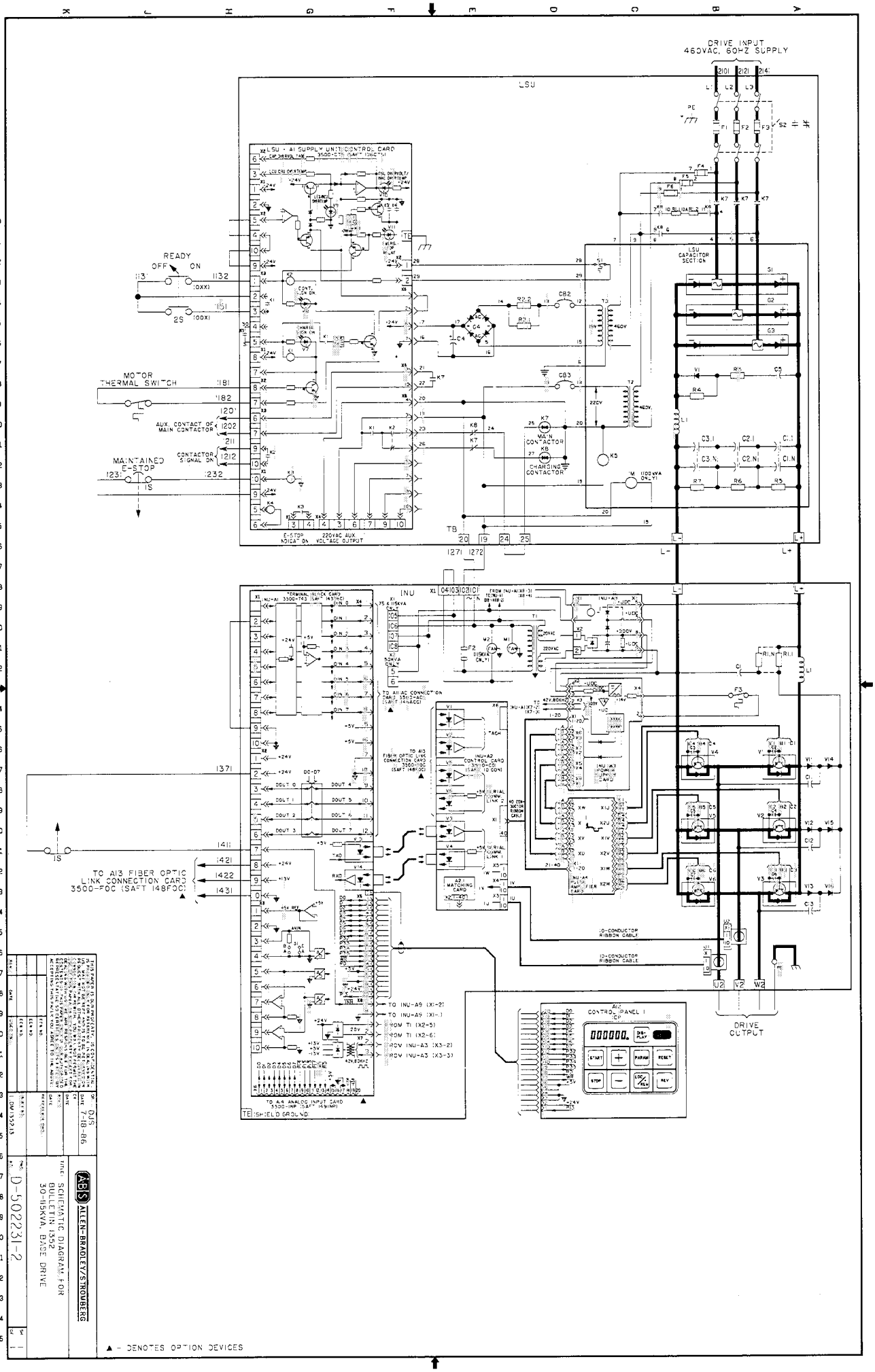
DRIVE INPUT
460VAC, 60HZ SUPPLY
LSU
LSU - A1 SUPPLY UNIT/CONTROL CARD
LSU CAPACITOR SECTION
READY
OFF
ON
MOTOR THERMAL SWITCH
AUX. CONTACT OF MAIN CONTACTOR
CONTACTOR SIGNAL ON
MAINTAINED E-STOP
MAIN CONTACTOR
CHARGING CONTACTOR
E-STOP INDICATION
220VAC AUX VOLTAGE OUTPUT
INU
TERMINAL INDEX CARD
TO A13 FIBER OPTIC LINK CONNECTION CARD 3500-FOC (SAFT 148FOC)
TO A13 FIBER OPTIC LINK CONNECTION CARD 3500-FOC (SAFT 148FOC)
TO A14 ANALOG INPUT CARD 3500-INP (SAFT 149INP)
TO INU-A9 (X1-2)
TO INU-A9 (X1-1)
TO INU-A3 (X2-5)
TO INU-A3 (X2-6)
TO INU-A3 (X3-2)
TO INU-A3 (X3-3)
10-CONDUCTOR RIBBON CABLE
10-CONDUCTOR RIBBON CABLE
CONTROL PANEL I
DRIVE OUTPUT
TE: SHIELD GROUND
▲ - DENOTES OPTION DEVICES
ALLEN-BRADLEY/STROMBERG
SCHEMATIC DIAGRAM FOR
BULLETIN 1352
30-115KVA, BASE DRIVE
D-502231-2
DJS
7-18-86

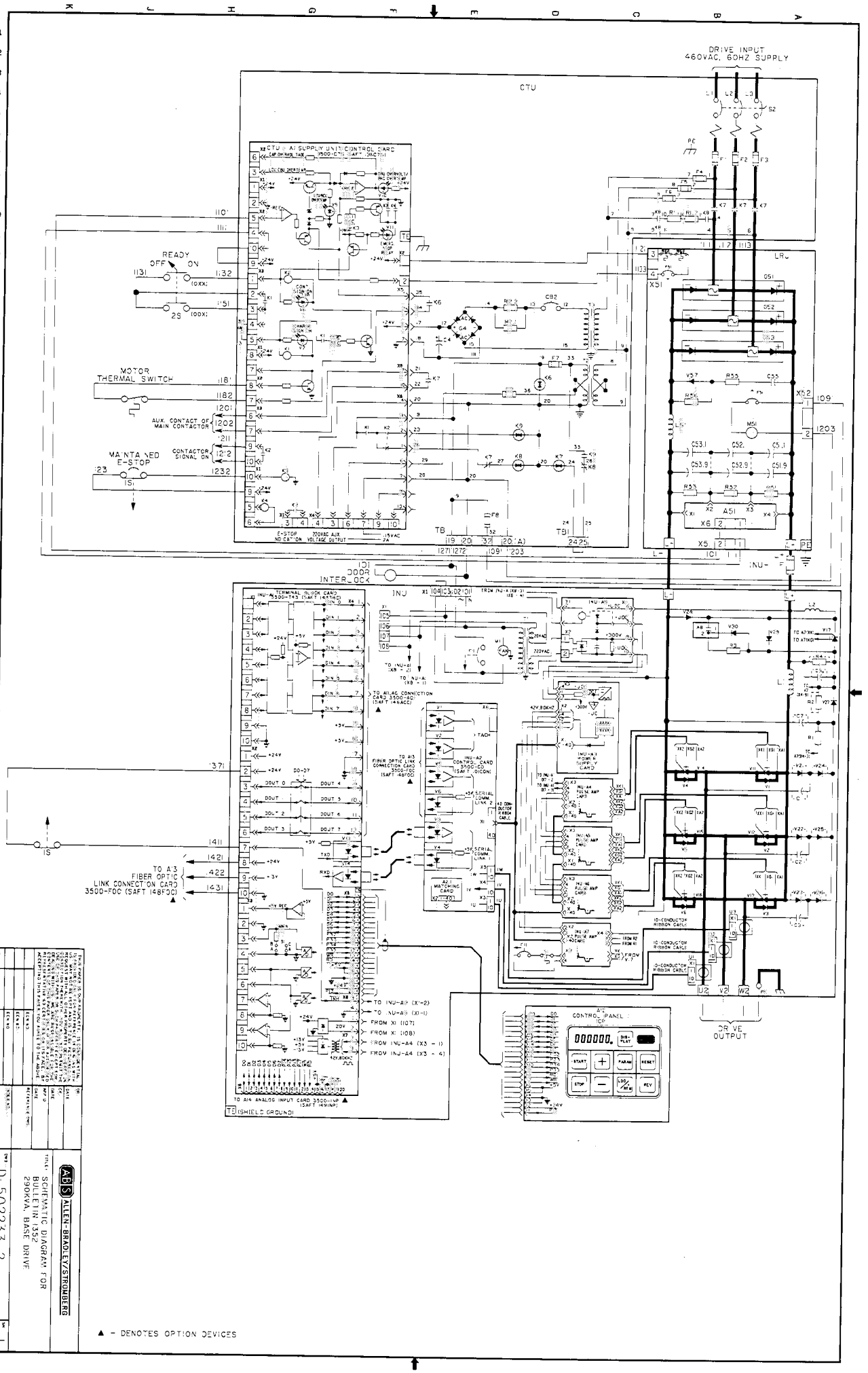
DRIVE INPUT
460VAC, 60HZ SUPPLY
CTU
CTU - A1 SUPPLY UNIT/CONTROL CARD
READY
OFF
ON
MOTOR
THERMAL SWITCH
AUX. CONTACT OF
MAIN CONTACTOR
CONTACTOR
SIGNAL ON
MAINTAINED
E-STOP
DOOR
INTERLOCK
INU
TERMINAL BLOCK CARD
INU-A3 3500-TB3 (SAFT 149ACC)
INU-A2
CONTROL CARD
3500-CC
(SAFT 149CON)
INU-A4
POWER
SUPPLY
CARD
INU-A5
POWER
SUPPLY
CARD
TO A3
FIBER OPTIC
LINK CONNECTION CARD
3500-FOC (SAFT 148FOC)
TO INU-A3 (X1-2)
TO INU-A3 (X1-1)
FROM X1 (107)
FROM X1 (108)
FROM INU-A4 (X3 - 1)
FROM INU-A4 (X3 - 4)
TO A14 ANALOG INPUT CARD 3500-IVP
(SAFT 149INP)
T8 (SHIELD GROUND)
CONTROL PANEL
000000.
START
STOP
PARAM
RESET
DRIVE
OUTPUT
▲ - DENOTES OPTION DEVICES
ALLEN-BRADLEY/STROMBERG
TITLE SCHEMATIC DIAGRAM FOR
BULLETIN 1352
290KVA, BASE DRIVE
D-502233-2
L DM1352 6

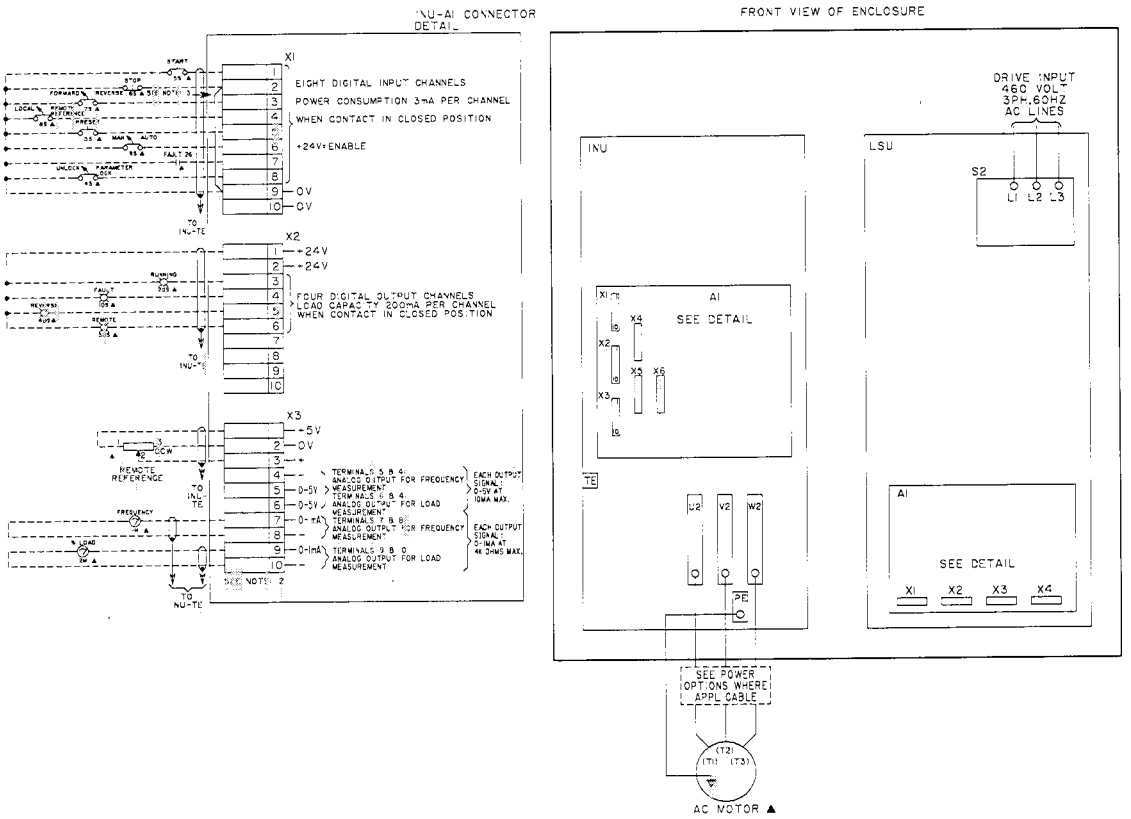

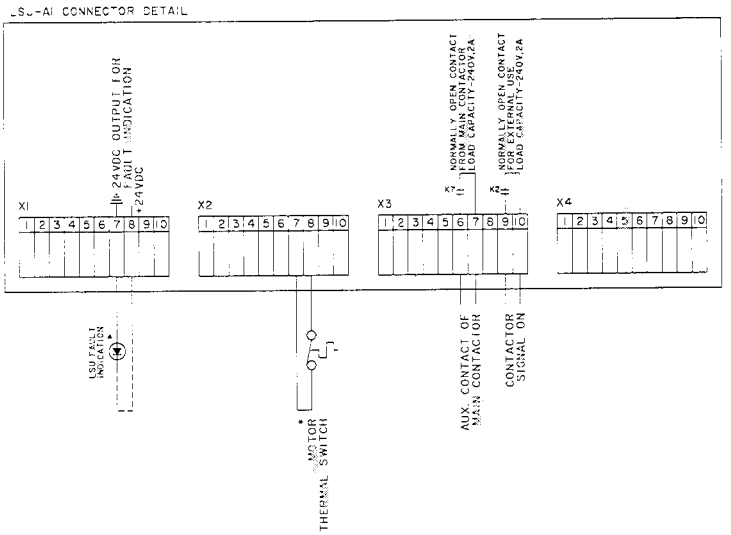

NOTES:
1. * - DENOTES COMPONENT SUPPLIED BY OTHERS.
2. USE ONLY ONE OUTPUT (VOLTAGE OR CURRENT) FOR FREQUENCY MEASUREMENT OUTPUT SIGNAL.
   USE ONLY ONE OUTPUT (VOLTAGE OR CURRENT) FOR LOAD MEASUREMENT OUTPUT SIGNAL.
3. IF STOP PUSHBUTTON IS USED REMOVE JUMPER FROM 2 9
4. ⟶ - INDICATES THAT WIRE WITH INSULATED SHIELD IS REQUIRED. THESE CONDUCTORS MUST BE ROUTED IN CONDUIT SEPARATE FROM POWER, AC CONTROL OR FIELD CONDUCTORS.

▲-DENOTES OPTIONAL DEVICE

REV.	DATE	DR.	DJS
		DATE	7-18-86
		APP'D	
		DATE	

ALLEN-BRADLEY/STROMBERG

TITLE: INTERCONNECTION DIAGRAM FOR BULLETIN 1352 30-115KVA, BASE DRIVE

DWG. NO. D-502231-5

SHEET 1 OF 1

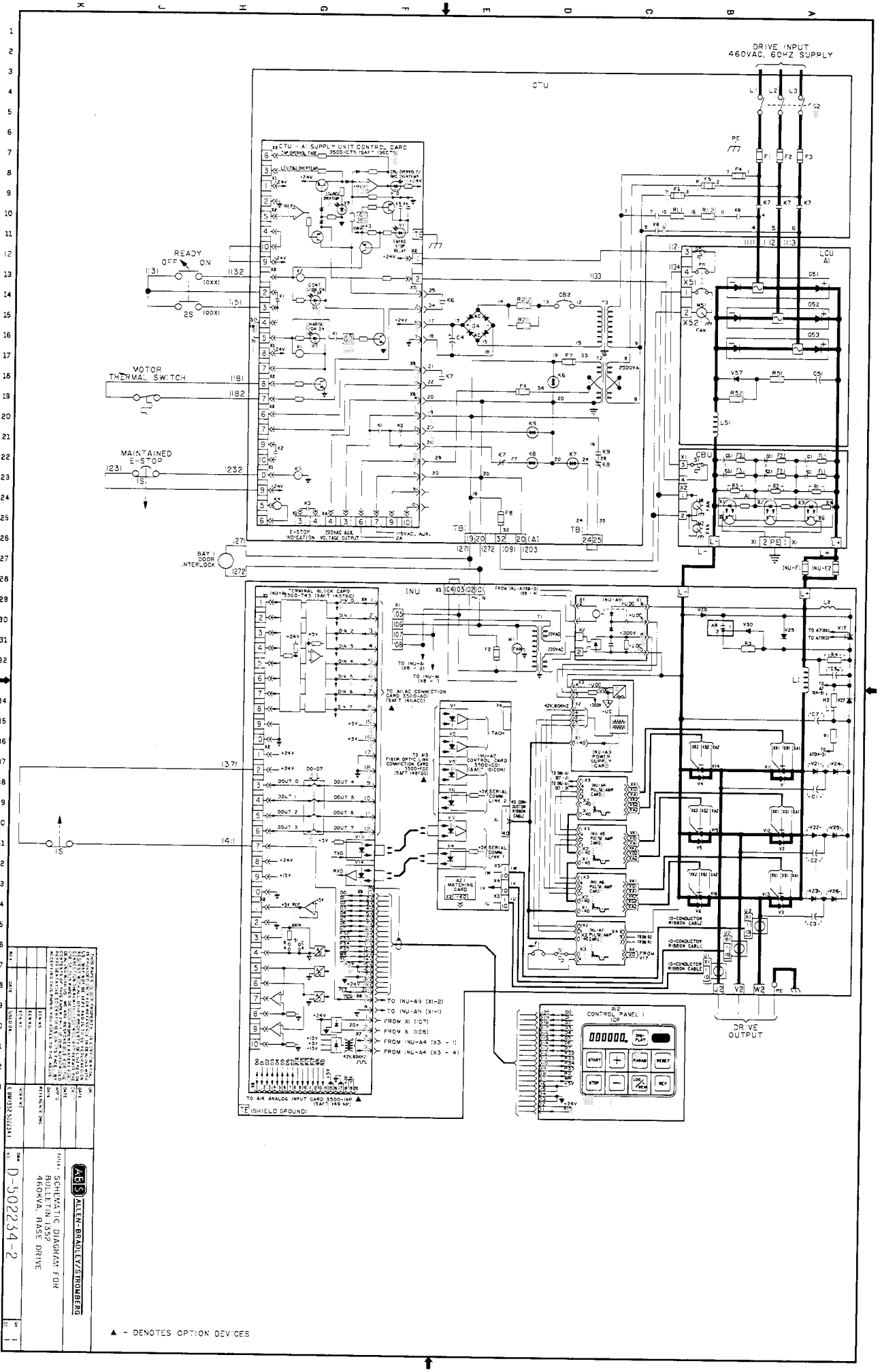
DRIVE INPUT
460VAC, 60HZ SUPPLY
CTU
CTU - A1 SUPPLY UNIT CONTROL CARD
READY
OFF
ON
MOTOR
THERMAL SWITCH
MAINTAINED
E-STOP
BAY 1
DOOR
INTERLOCK
LCU
A1
CBU
INU
A2
CONTROL PANEL
DRIVE
OUTPUT
TO A/4 ANALOG INPUT CARD 3500-INP
(SHIELD GROUND)
▲ - DENOTES OPTION DEVICES
ALLEN-BRADLEY/STROMBERG
SCHEMATIC DIAGRAM FOR
BULLETIN 1352
460VA, BASE DRIVE
D-502234-2

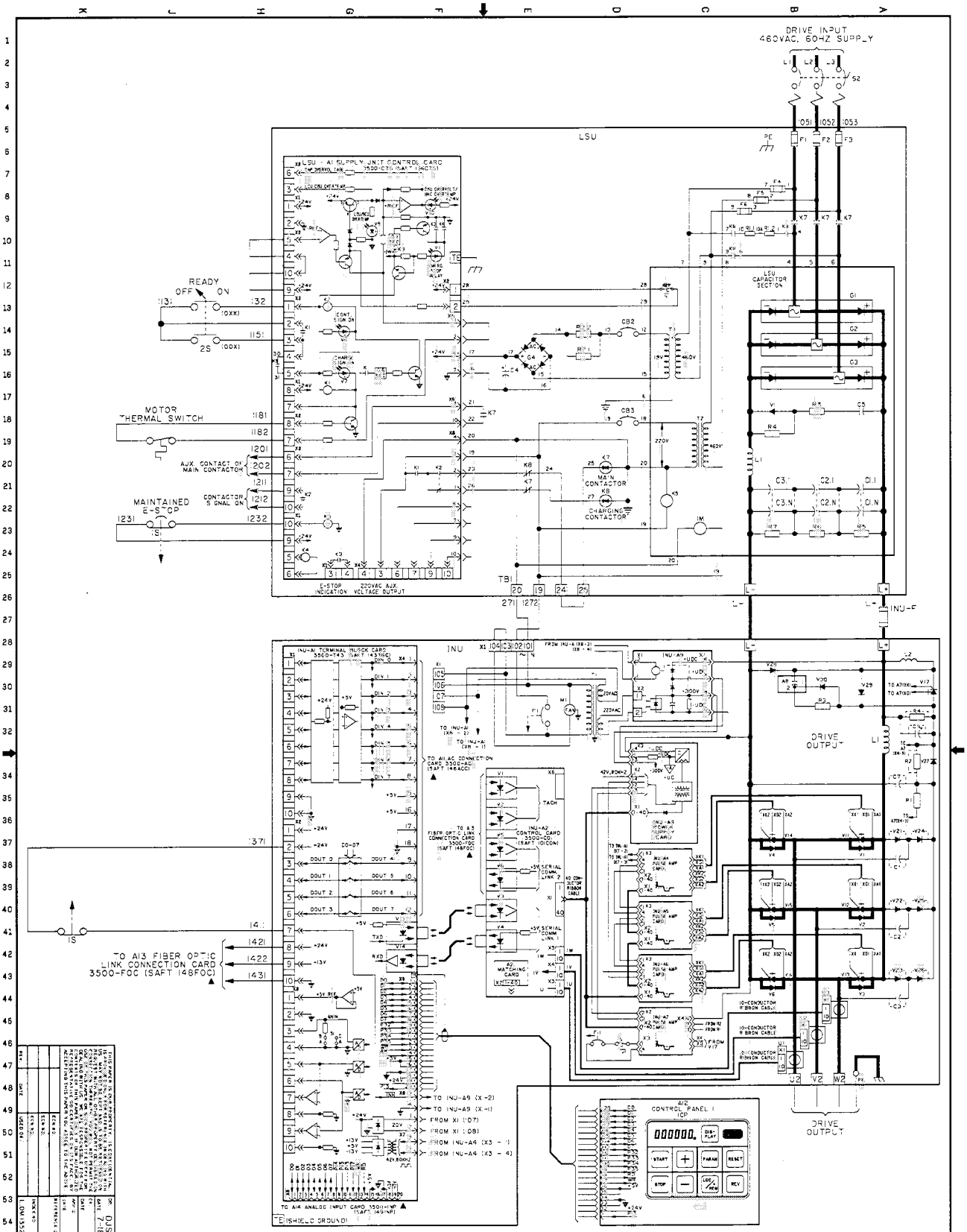
DRIVE INPUT
460VAC, 60HZ SUPPLY
LSU
LSU CAPACITOR SECTION
READY
OFF ON
MOTOR THERMAL SWITCH
AUX CONTACT OF MAIN CONTACTOR
MAINTAINED E-STOP
MAIN CONTACTOR
CHARGING CONTACTOR
E-STOP INDICATION
220VAC AUX VOLTAGE OUTPUT
INU
DRIVE OUTPUT
TO AI3 FIBER OPTIC LINK CONNECTION CARD 3500-FOC (SAFT 148FOC)
CONTROL PANEL I
TO INU-A9 (X-2)
TO INU-A9 (X-1)
FROM X1 (:07)
FROM X1 (:08)
FROM INU-A4 (X3 - 1)
FROM INU-A4 (X3 - 4)
(SHIELD GROUND)
▲ - DENOTES OPTION DEVICES
ALLEN-BRADLEY/STROMBERG
SCHEMATIC DIAGRAM FOR
BULLETIN 1352
180KVA, BASE DRIVE
D-502232-2
DJS
7-18-86

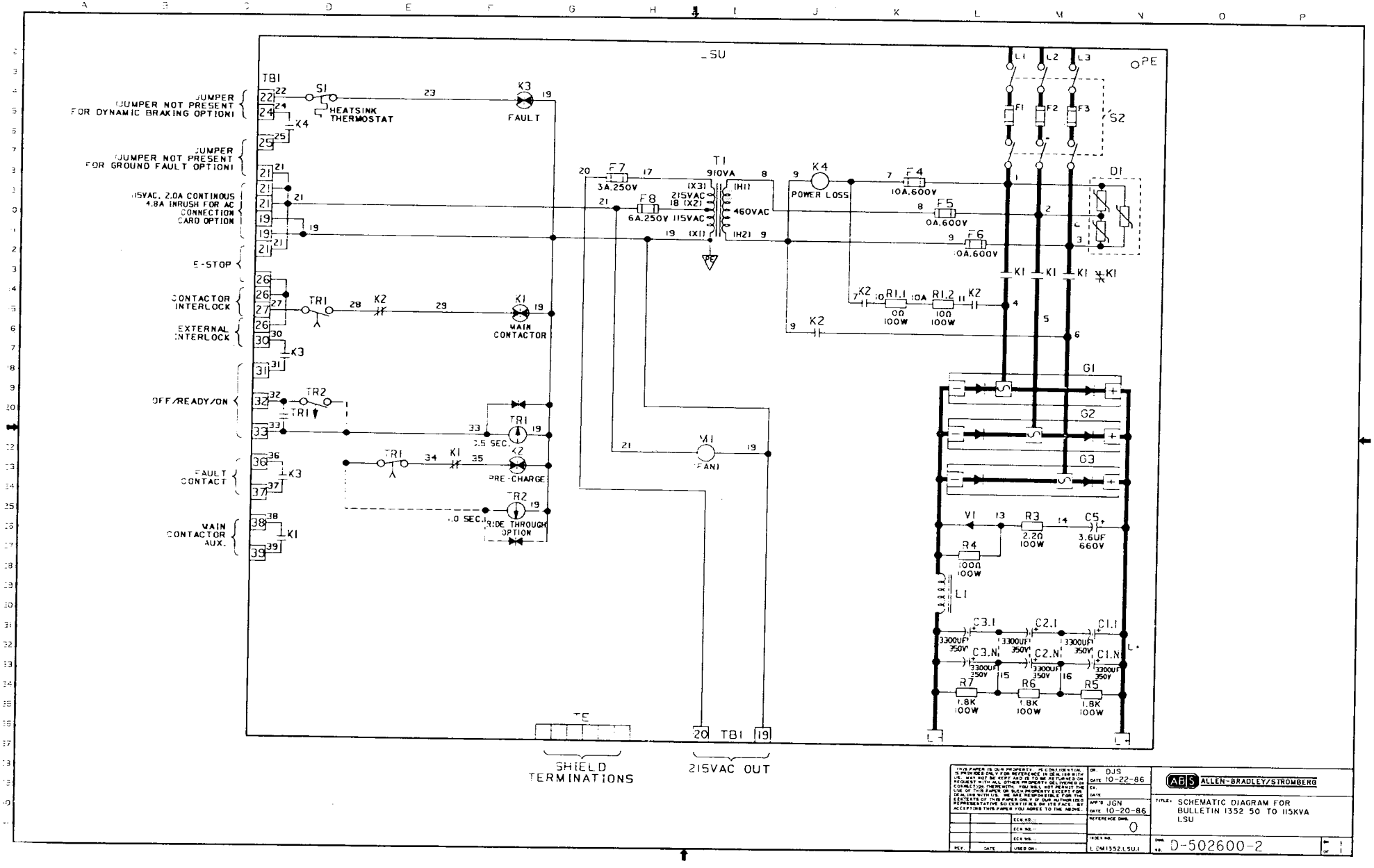
LSU
PE
TB1
JUMPER NOT PRESENT FOR DYNAMIC BRAKING OPTION
JUMPER NOT PRESENT FOR GROUND FAULT OPTION
115VAC, 2.0A CONTINOUS 4.8A INRUSH FOR AC CONNECTION CARD OPTION
E-STOP
CONTACTOR INTERLOCK
EXTERNAL INTERLOCK
OFF/READY/ON
FAULT CONTACT
MAIN CONTACTOR AUX.
S1
HEATSINK THERMOSTAT
K3
FAULT
TR1
K2
K1
MAIN CONTACTOR
TR2
2.5 SEC.
PRE-CHARGE
1.0 SEC.
RIDE THROUGH OPTION
F7
3A.250V
F8
6A.250V
T1
910VA
215VAC
115VAC
460VAC
K4
POWER LOSS
F4
10A.600V
F5
0A.600V
F6
10A.600V
R1.1
0Ω 100W
R1.2
10Ω 100W
L1
L2
L3
F1
F2
F3
S2
D1
G1
G2
G3
M1
FAN
V1
R3
2.2Ω 100W
C5
3.6UF 660V
R4
300Ω 100W
L1
C3.1
C2.1
C1.1
C3.N
C2.N
C1.N
3300UF 350V
R7
R6
R5
1.8K 100W
TE
SHIELD TERMINATIONS
TB1
215VAC OUT
DR. DJS
DATE 10-22-86
APP'D JGN
DATE 10-20-86
REFERENCE DWG. 0
ALLEN-BRADLEY/STROMBERG
TITLE: SCHEMATIC DIAGRAM FOR BULLETIN 1352 50 TO 115KVA LSU
DWG. NO. D-502600-2

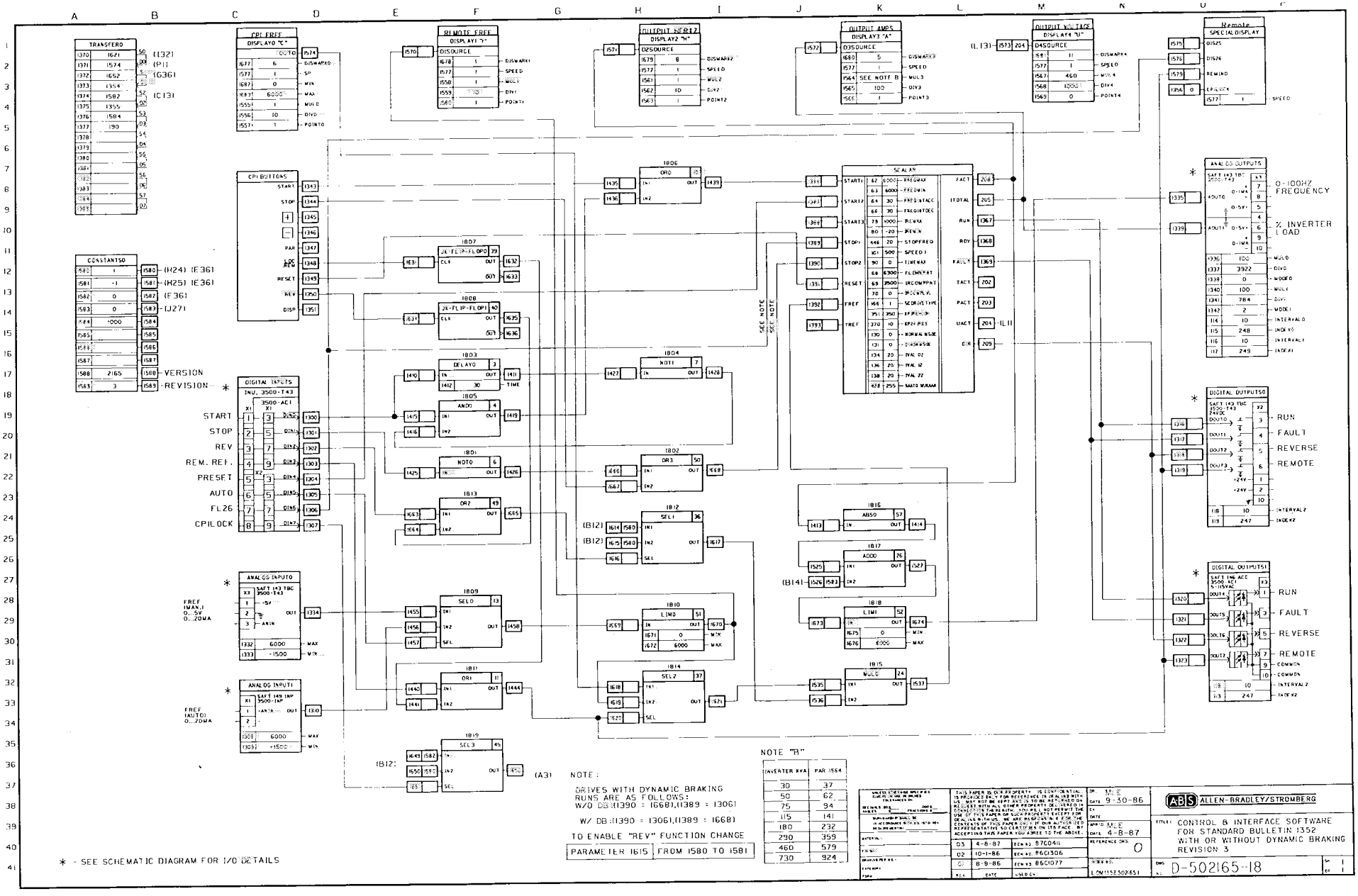
TRANSFER0
CPI REF
REMOTE REF
OUTPUT VOLTAGE
OUTPUT AMPS
Remote
CPI BUTTONS
CONSTANTS0
SCALAR
DIGITAL INPUTS
ANALOG INPUT0
ANALOG INPUT1
ANALOG OUTPUTS
DIGITAL OUTPUTS0
DIGITAL OUTPUTS1
START
STOP
REV
REM. REF.
PRESET
AUTO
FL26
CPILOCK
FREF (MAN.) 0...5V 0...20MA
FREF (AUTO) 0...20MA
0-100HZ FREQUENCY
% INVERTER LOAD
RUN
FAULT
REVERSE
REMOTE
VERSION
REVISION
* - SEE SCHEMATIC DIAGRAM FOR I/O DETAILS
NOTE:
DRIVES WITH DYNAMIC BRAKING RUNS ARE AS FOLLOWS:
W/O DB:(1390 = 1668),(1389 = 1306)
W/ DB:(1390 = 1306),(1389 = 1668)
TO ENABLE "REV" FUNCTION CHANGE
PARAMETER 1615 FROM 1580 TO 1581
NOTE "B"
INVERTER KVA | PAR 1564
30 | 37
50 | 62
75 | 94
115 | 141
180 | 232
290 | 359
460 | 579
730 | 924
ALLEN-BRADLEY/STROMBERG
TITLE: CONTROL & INTERFACE SOFTWARE FOR STANDARD BULLETIN 1352 WITH OR WITHOUT DYNAMIC BRAKING REVISION 3
DWG NO. D-502165-18
DATE 9-30-86
APPD 4-8-87
03 4-8-87
02 10-1-86
01 8-8-86

1

2

3

4

5

6

7

8

9

SERVICE NOTES

10

ALLEN-BRADLEY/STROMBERG

EQUIPMENT
SERIAL
NUMBER _____

DATE	SERVICE NOTES

ALLEN-BRADLEY/STROMBERG

EQUIPMENT
SERIAL
NUMBER _____

DATE	SERVICE NOTES

ALLEN-BRADLEY/STROMBERG

EQUIPMENT
SERIAL
NUMBER _____

DATE	SERVICE NOTES

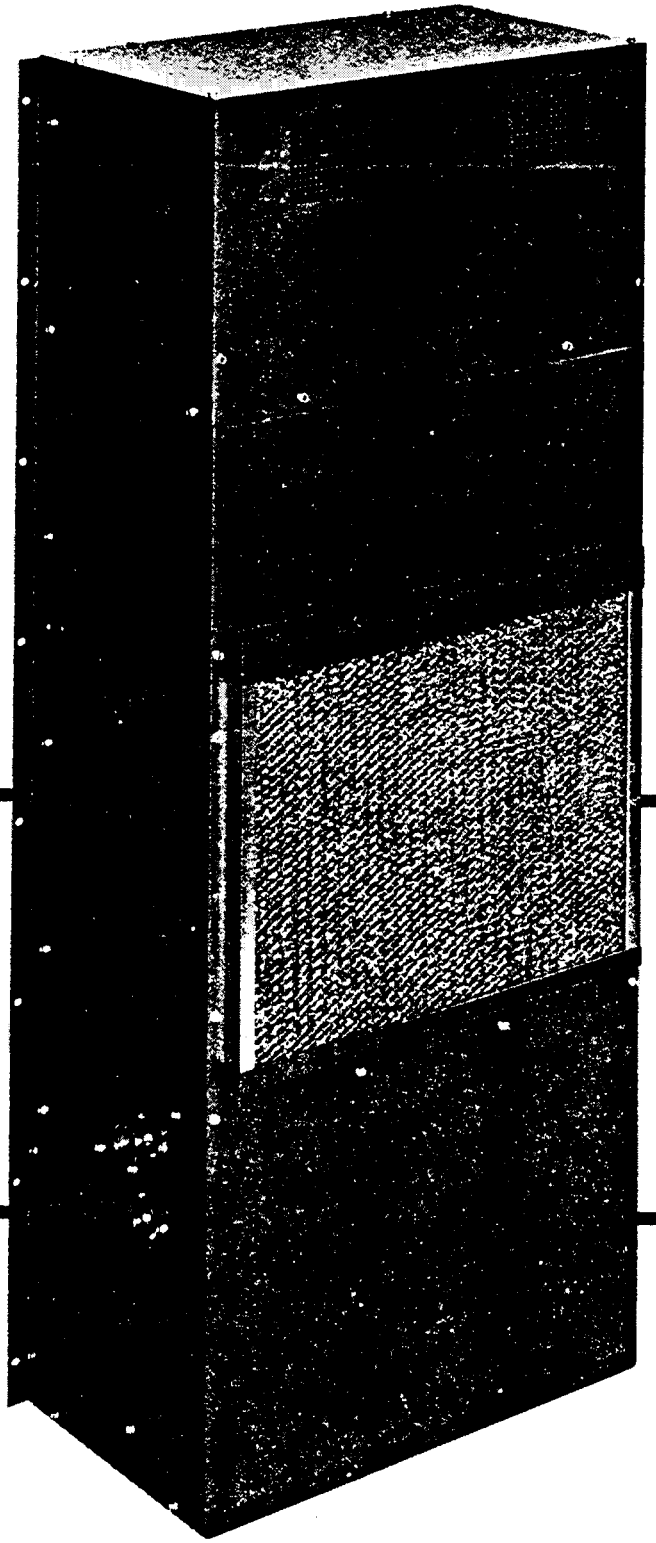

LC52
SERIES

INSTRUCTION MANUAL

SLIMBOY®

**LIQUID CHILLER/
AIR CONDITIONER
for
LIQUID SYSTEMS AND
ELECTRONIC ENCLOSURES**

. art No. 10-1008-40

McLEAN MIDWEST
SUBSIDIARY OF ZERO CORPORATION
4000 83rd Avenue No., Brooklyn Park, Minnesota 55443

TABLE OF CONTENTS

Section	Page
Unpacking and Inspection	See Below
Handling	2
Product Identification	2
Design Data	3
Bench Testing	3
Installation Instructions	4
Figures #1, 2 & 3	5
Principles of Operation	6
Maintenance	7
Compressor	7
Filter Installation, Removal & Cleaning	7, 8 & 9
Condenser & Evaporator Blowers	9
Loss of Refrigerant	9
Drawing 52-C001	10
Illustrated Parts List	11
Accessories Parts List	11
Table	11
Exploded View	12
Wiring Schematics	13
Warranty	14

! WARNING !

Read this manual thoroughly before you attempt to install or test the SLIMBOY® air conditioner.

UNPACKING AND INSPECTION

Inspect the SLIMBOY® Air Conditioner. Check for concealed damage that may have occurred during shipment. Look for dents, scratches, loose assemblies, evidence of oil, etc. Any damage evident upon receipt should be noted on the freight bill. Damages should be brought to the attention of the delivering carrier and **NOT** to McLEAN MIDWEST, within 15 days of delivery. Save the carton and packing material and request an inspection. Then file a claim with the delivering carrier.

McLEAN MIDWEST cannot accept responsibility for freight damages; however, we are ready to assist you in any way possible.

For assistance, call or write:

McLean Midwest
4000 83rd Avenue North
Brooklyn Park, Minnesota 55443
612/561-9400

HANDLING

To avoid possible shipping damage and facilitate transportation and storage, the SLIMBOY® air conditioner may have been shipped in a horizontal position. If it is necessary to place the air conditioner in a horizontal position after uncartoning, be certain it is placed in an upright (vertical) or mounting position for a minimum of five (5) minutes before operating, in order to allow the compressor oil to drain to the compressor sump area.

> **CAUTION**
>
> **NEVER attempt to operate the air conditioner while it is in a horizontal position, on its side, back, or front. The refrigeration compressor is filled with lubricating oil. Running the compressor without oil in the lower part of the housing will cause permanent damage to the unit. This also voids the warranty.**

Read this manual thoroughly before you attempt to install or test the SLIMBOY® air conditioner.

HOW TO IDENTIFY YOUR SLIMBOY® AIR CONDITIONER

For installation and maintenance as outlined in this manual, first refer to the nameplate on your unit. The nameplate will provide important data regarding capacity of the unit, minimum and maximum ambient operating temperatures, type and amount of refrigerant required for re-charging, and most important - electrical power characteristics when making electrical hook-ups or connections.

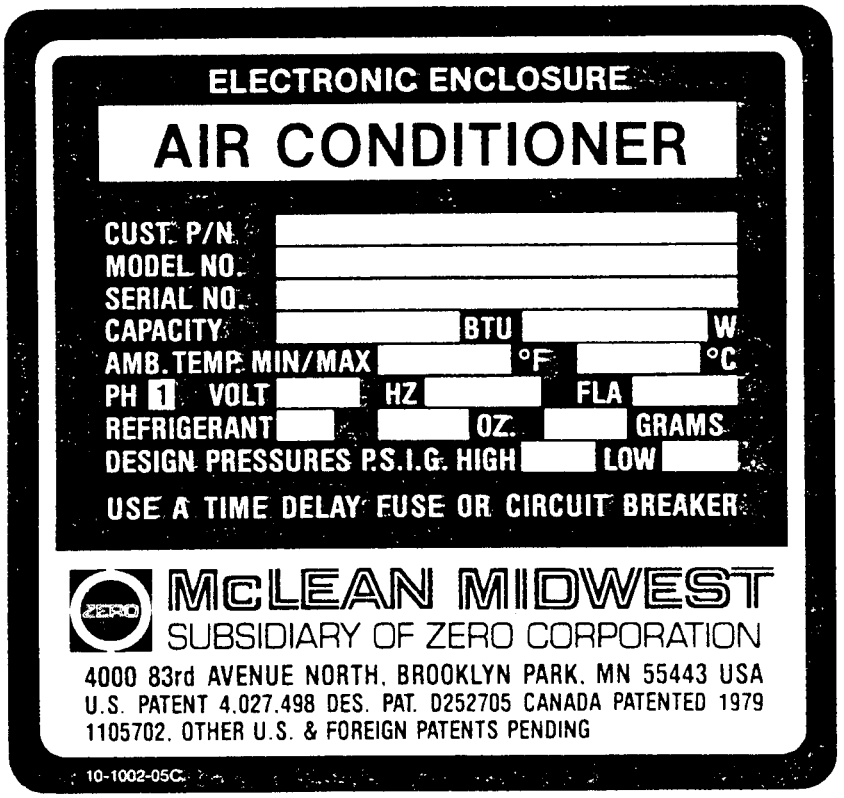

When ordering service parts, specify these numbers.

Before installing, make certain these parameters are met. Lower or higher ambient temperatures may cause permanent damage or malfunction of the unit.

Before operating, make certain outlet and power source match these requirements.

Leak test pressures

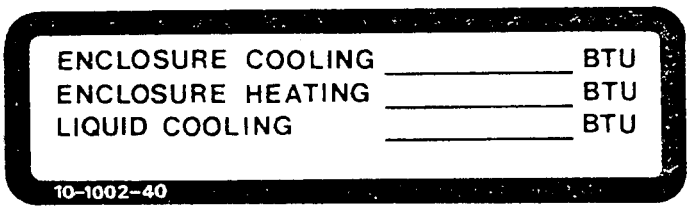

UNIT CAPACITY

DESIGN DATA

Model	Voltage	Hz	Full Load Amps	Phase	BTU/Hr.* Liquid	BTU/Hr. Air	Max. F Amb. Temp.	Ship Weight
LC52-2026-001	460	60	11.0	1	18000	2000	125° F	295 lbs

* Based on actual test with H_2O at maximum ambient temperature shown.

BENCH TESTING

CAUTION

To avoid possible damage to the air conditioner, it must be in an upright (vertical) position for a mimimum of five (5) minutes before functional testing is started.

When "bench testing" the SLIMBOY® air conditioner before mounting to the electronic enclosure, follow the procedures outlined in the following paragraphs:

— Refer to nameplate for proper electrical current requirements, then connect the power cord to a properly grounded electrical outlet.

NOTE

Minimum circuit amperage should be determined by the Design Data Table above. No other equipment should be connected to this circuit to prevent over-loading. Use time delay fuse or circuit breaker.

— Make sure the unit has been standing upright for five (5) minutes.

— Operate the air conditioner for five (5) or (10) minutes. No excessive noise or vibration should be evident during this run period. The condenser blower on top, the evaporator or cool air blower located in the lower portion of the unit and the compressor should be running. To check cool air output, use a reliable air temperature measuring device. The cool air output should be between 50° to 60° F. when room temperature is between 70° to 80° F.

—You may remove the air inlet filter to check further on the operation. The discharge line from the compressor (the uninsulated line) should become very warm. **Care should be taken to avoid possible burns.** Touch carefully! Condenser air temperatures should be warmer than normal room temperatures within a few minutes.

— Mounted along side the compressor is the suction accumulator which is insulated to help avoid sweating or condensation buildup.

— The compressor is provided with automatic reset thermal overload protection. This thermo switch is located inside the compressor and is not accessible. The only time this switch should operate is when the compressor overheats due to clogged or dirty inlet air filter, if ambient air temperatures exceed nameplate rating or if enclosure dissipated heat loads exceed the rated capacity of the air conditioner. The thermal overload switch will actuate and stop compressor operation. Blowers will continue to operate, however, and the compressor will not restart until the compressor has cooled to within the thermal overload cut-in temperature setting.

INSTALLATION

When mounting the SLIMBOY® air conditioner to the electronic cabinet or enclosure, the following procedures should be referred to:

WARNING

TO AVOID POSSIBLE PERSONAL INJURY OR PROPERTY DAMAGE, BE SURE THAT THE AIR CONDITIONER'S WEIGHT DOES NOT OVERBALANCE THE ELECTRONIC CABINET THAT IT IS TO BE MOUNTED TO. WEIGHT OF THE UNIT IS NOTED IN THE DESIGN DATA SECTION ON THE PRECEDING PAGE. USE ALL MOUNTING HOLES TO INSURE STABILITY AND EFFICIENT SEAL.

— To protect the integrity of the "closed loop" design (see Principles of Operation), adhesive backed gasket tape is provided (shipped loose) for sealing around the enclosure's air conditioner mounting opening. The gasket kit contains pre-cut lengths that are to be adhered to the air conditioner as shown in Fig. 3 or to the enclosure.

— When mounting to a NEMA 12 type enclosure, interfacing air "in" & "out" openings must be provided as shown in Fig. 1. Refer to layout in Fig. 2.

— Make sure that the plastic plug in the condenser drain is removed and discarded. See Fig. 3. A copper "P" trap (located inside the air conditioner) is provided in the drain system to prevent counter air flow up the drain tube from interfering with proper drainage.

CAUTION

Connect the liquid lines to the unit while holding the fittings protruding from the air conditioner with a wrench. Note—these fittings are welded in place but undue torque could result in internal damage if not properly secured when connecting. The ports are labeled "IN" and "OUT" with respect to the air conditioner, and also shown in drawing on Page 10.

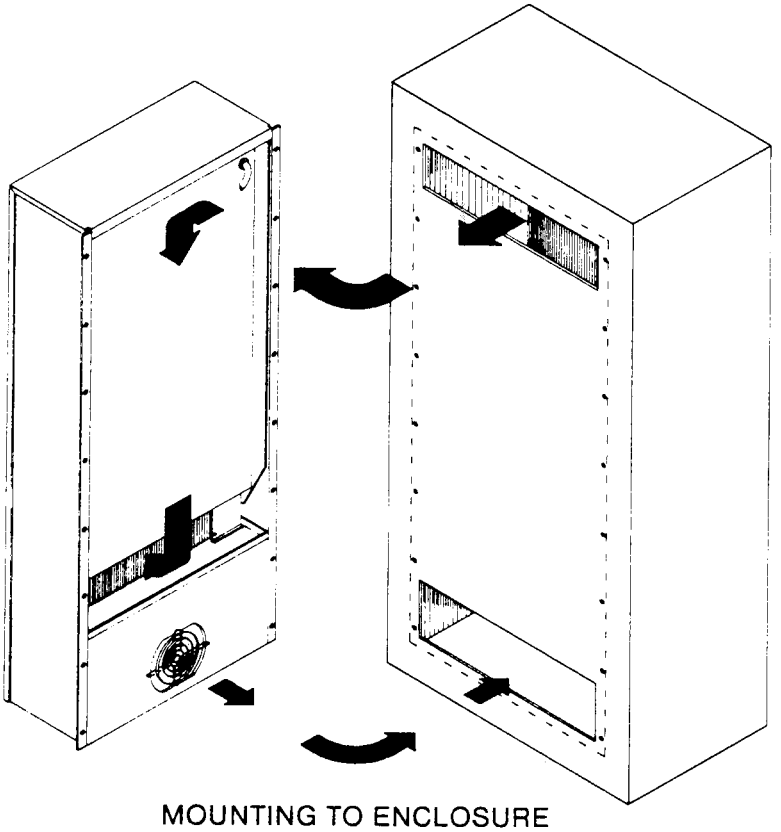

MOUNTING TO ENCLOSURE
FIG. 1

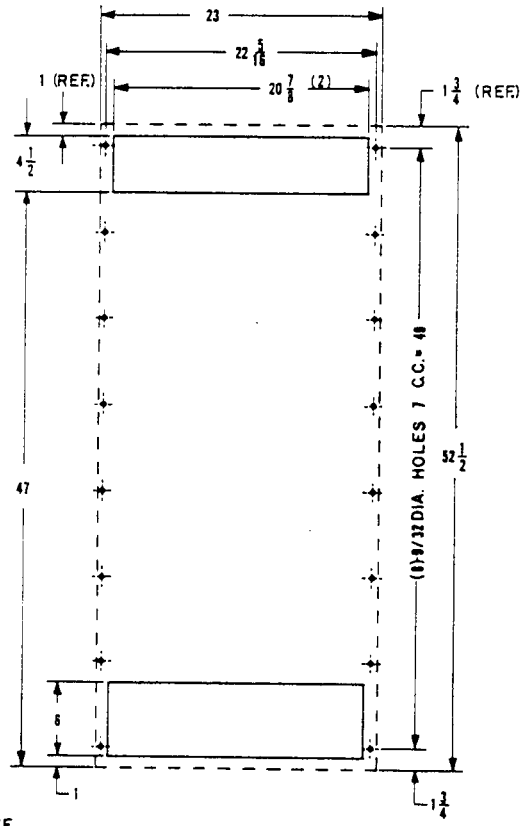

NOTE
1. DASH LINES REPRESENT AIR CONDITIONER.

MOUNTING AND
CUT-OUT DIMENSIONS
FIG. 2

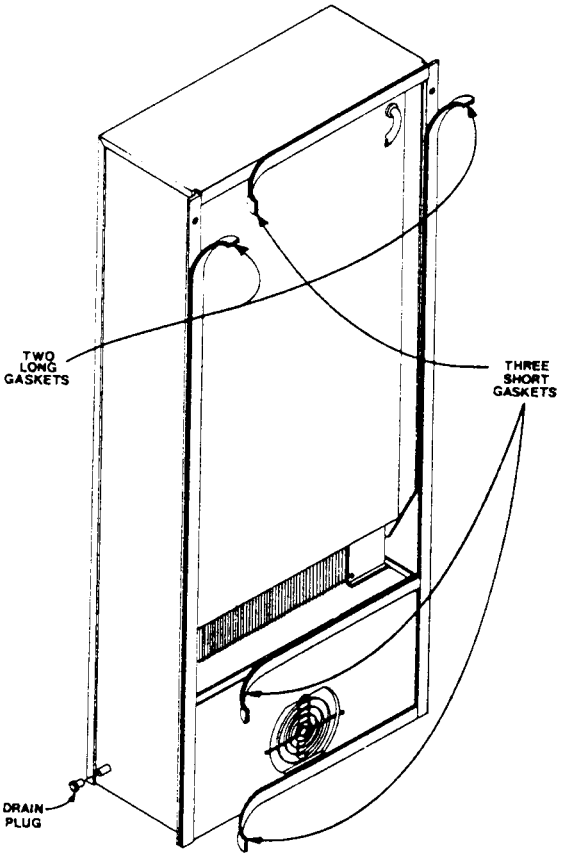

GASKET INSTALLATION
FIG. 3

PRINCIPLES OF OPERATION

SLIMBOY® air conditioners are designed specifically to cool and dehumidify the internal environments of cabinets and enclosures which are used to package electronic components, thus assuring a cool, clean atmosphere for reasons of optimum performance and longevity.

Hot air inside the electronic cabinet or enclosure is drawn into the return air plenum area of the air conditioner by means of the evaporator duplex blower located in the lower section of the air conditioner. This air is drawn through the evaporator coil, cooled and discharged back through the two (2) cold air outlets into the cabinet or enclosure. Any moisture in this air condenses on the evaporator coil and ultimately collects in the condensate tray where it is then discharged to the outside of the air conditioner by the condensate drain tube which projects out of the right hand side panel.

The "closed loop" design of the air conditioner assures that this clean cooled air never mixes with the hot, dirty ambient air that is used only for cooling the compressor and accomplish the heat exchange through the condenser coil. Generally, the cabinet or enclosure air which is being cooled and recirculated over and over again does not require any filtering media.

Room, or ambient air drawn into the air conditioner through the inlet filter, across the compressor and through the condenser coil is usually dirty, dusty and/or humid air, depending upon the specific environment in which the air conditioner is required to operate. This ambient air is discharged by the condenser duplex blower back to the ambient environment. The temperature of this discharged air will be quite warm or actually hot, depending on the ambient temperature and the work load imposed on the air conditioner.

Providing the inlet filter is properly maintained by frequent cleaning and/or replacement, the inlet filter will assure relatively clean air to pass through the condenser coil. Dirty filters will hamper the optimum operating effeciency of the air conditioner.

NOTE

The condenser filter will require periodic maintenance as explained on Pages 7 through 9.

If electrical power is momentarily interrupted to the air conditioner and reapplied immediately, (within 3 to 5 seconds), the compressor may not restart due to the high back pressure of the compressor.

DO NOT ATTEMPT TO RE-START THE AIR CONDITIONER FOR AT LEAST ONE (1) MINUTE AFTER THE UNIT HAS BEEN SHUT OFF EITHER ACCIDENTALLY OR INTENTIONALLY.

It takes at least one (1) minute after shut-down for the compressor suction and discharge pressures to equalize in order to restart the air conditioner.

OPERATING THE SLIMBOY® AIR CONDITIONER AT AMBIENT TEMPERATURES BELOW MINIMUM OR ABOVE MAXIMUM TEMPERATURES INDICATED ON THE NAMEPLATE WILL VOID ALL WARRANTIES.

IT IS RECOMMENDED THAT THE WARRANTY SECTION OF THIS MANUAL BE READ IN ORDER TO FAMILIARIZE YOURSELF WITH PARAMETERS OF RESTRICTED OPERATION.

It is very important to make sure that the plastic plug installed in the outlet of the condensate drain tube be removed prior to operation of the air conditioner. By not removing this plug, you will cause the collected condensate or water to back up the drain tube and flood the condensate tray. This flooding or overflowing water could then be transmitted into the electronic cabinet or enclosure by the air exhausted from the evaporator blower, thus causing damage to expensive electronic components (See Figure 3)

The moisture that the enclosure air can contain is limited. If moisture flows from the drain tube continuously this can only mean that ambient air is entering the enclosure. Remember that frequent opening of the enclosure's door admits humid air which the air conditioner must then dehumidify.

MAINTENANCE

COMPRESSOR

The compressor requires no maintenance. It is hermetically sealed, properly lubricated at the factory and should provide years of satisfactory operating service.

Should the freon charge be lost, recharging ports (access fittings) on the suction and discharge sides of the compressor are provided for recharging and/or checking suction and discharge pressures.

UNDER NO CIRCUMSTANCE SHOULD THE ACCESS FITTING COVERS BE LOOSENED, REMOVED OR TAMPERED WITH.

Recharging ports are provided for the ease and convenience of reputable refrigeration repair service personnel for recharging the air conditioner. (See Page 9)

INLET FILTER

Proper maintenance of the inlet filter will assure normal operation of your SLIMBOY® air conditioner. If filter maintenance is delayed or ignored, the maximum ambient temperatures under which the unit is designed to operate will be decreased.

As the compressor operating temperature increases above normal due to dirty or clogged inlet filter (or plugged condenser coil), the air conditioner's compressor will stop operating due to actuation of the thermal overload cut-out switch located on the compressor housing. As soon as the compressor temperature has dropped to within the switch's cut-in setting, the compressor will restart automatically. However the above condition will continue to take place until the inlet filter has been cleaned or replaced.

It is recommended that power to the air conditioner be interrupted intentionally when abnormally high compressor operating temperatures cause automatic shut-down of the unit. The above described shut-down is symptomatic of clogged or dirty filters, thus causing a reduction in cooling air flow across the surface of the compressor and condenser coil.

CONTINUED OPERATION UNDER THE ABOVE CONDITIONS CAN AND WILL DAMAGE AND SHORTEN COMPRESSOR LIFE. THE AIR CONDITIONER FEATURES AN EASILY REMOVABLE INLET FILTER TO FACILITATE NECESSARY CLEANING. THERE SHOULD BE NO REASON TO NEGLECT THIS NECESSARY MAINTENANCE.

HOW TO REMOVE, CLEAN OR INSTALL A NEW FILTER

1. Lift filter high enough for bottom to clear the lower filter retainer.

2. Pull bottom of filter toward you, pressing downward until the top of the filter clears the upper filter retainer. Remove CAREFULLY if unit is operating in order to assure that no dirt from the filter enters the air intake opening.

3. Follow cleaning instructions below.

4. Re-install cleaned or install new filter by sliding filter top into upper retainer; push filter against unit, and slide filter bottom into lower retainer.

5. **Re-install filters according to AIR FLOW arrow on filter label.**

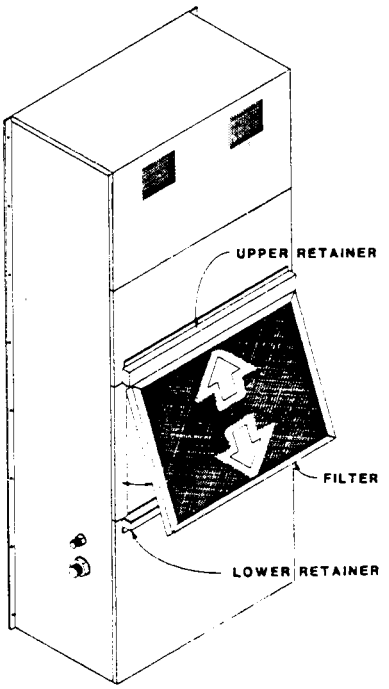

SERVICING AND CLEANING INSTRUCTIONS FOR RP® AIR FILTERS

RP aluminum washable air filters are designed to provide excellent filtering efficiency with a high dust holding capacity and a minimum amount of resistance to air flow. Because they are constructed entirely of aluminum they are light weight and easy to service. Optimum filter performance is maintained by re-coating the filters after washing with RP Super Filter Coat adhesive. To achieve maximum performance from your air handling equipment, air filters should be cleaned on a regular basis.

CLEANING INSTRUCTIONS

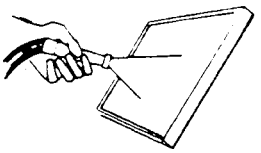

1. Flush the filter with warm water from the exhaust side to the intake side. DO NOT USE CAUSTICS.

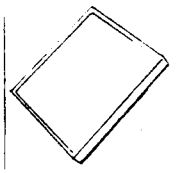

2. After flushing allow filter to drain. Placing it with a corner down will assure complete drainage.

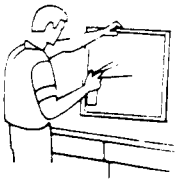

3. Recoat the filters with RP Super Filter Coat adhesive by dipping or spraying. If filter is sprayed do so from both sides for maximum concentration of adhesive.

It is impossible to recommend a filter cleaning interval due to the wide variety of air quality conditions, as well as not knowing the particular operating duty cycles of the air conditioner. Amounts of airborne dust/dirt particles are different in every location. It is recommended that when a fine layer of dust or lint is visible on the surface of the filter, that it be removed and inverted so as to use the entire effective filter surface area before it is flushed, drained, coated with proper coating and re-installed.

Do not run the SLIMBOY® air conditioner for extended periods of time with the inlet filter removed. Particles of dust, lint, etc. can plug the fins of the condenser coil which will give the same reaction as a plugged filter. The condenser coil is not visible through the filter opening, so protect it with a clean filter!

CONDENSER AND EVAPORATOR BLOWERS

Blower motors require no maintenance. All bearings, shafts, etc. are lubricated during manufacturing for the life of the motor.

CAUTION

Operation of the SLIMBOY® air conditioners in areas containing airborne caustics or chemicals can rapidly deteriorate filters, condenser coils, blowers and motors, etc. Contact McLean Midwest for special recommendations.

If the condenser blower motor (Top blower) should fail, it is not necessary to remove the air conditioner from the cabinet or enclosure to replace the blower. The condenser blower is mounted on its own bulkhead and is easily accessible by removing the front access panel.

Also note that the condenser air can be directed vertically or horizontally by rotating the top panel.

REFRIGERANT LOSS

Your SLIMBOY® air conditioner was thoroughly tested before leaving the factory to insure against refrigeration leaks. Shipping damage or microscopic leaks not found with sensitive electronic freon leak detection equipment during manufacture may require repair and recharging of the system. This work should be performed by qualified professionals only, generally available in any reputable air conditioning repair or service company in your local area.

Refer to the data on your nameplate which specifies the type of freon and the charge size in ounces.

Before recharging, make sure there are no leaks and that the system has been properly evacuated by deep vacuum.

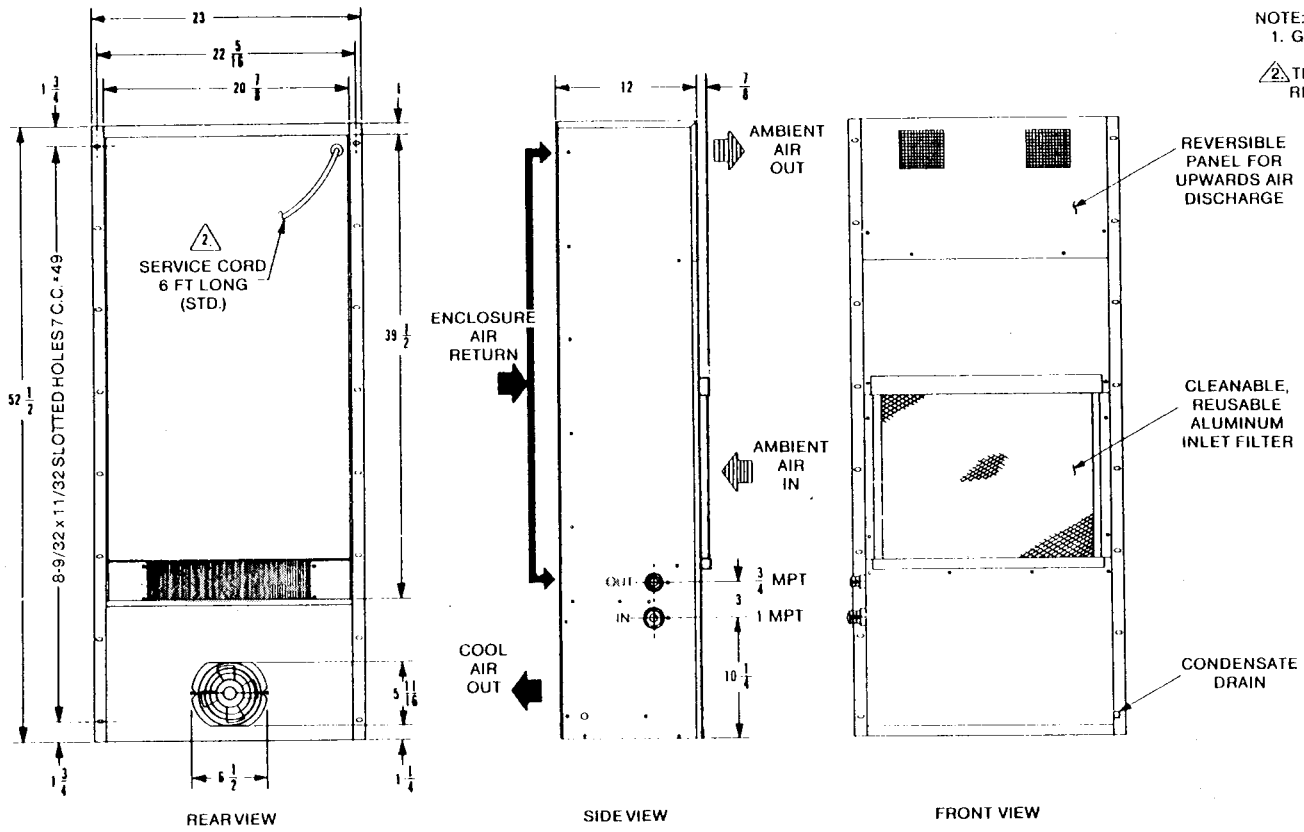

NOTE:
1. GASKET KIT FOR MOUNTING TO ENCLOSURE INCLUDED.

2. THIS 39-½" x 20-⅞" AREA IS RECESSED 1-11/16" FROM REAR SURFACE. (REFERRED TO AS THE "PLENUM".)

DESIGN DATA

Model	Voltage	Hz	Full Load Amps	Phase	BTU/Hr. LIQUID	BTU/Hr. AIR	Max. F Amb. Temp.	Ship Weight
LC52-2026-001	230	60	20.0	1	18000	2000	110	215 lbs.

REVISIONS		
NO	DATE	BY
1		
2		
3		
4		
5		

McLEAN MIDWEST
SUBSIDIARY OF ZERO CORPORATION

LC52 SERIES
AIR CONDITIONER/LIQUID CHILLER

DRAWN BY RAP	SCALE APPROX. 1/10	MATERIAL	
CHK'D PAR	DATE 2-18-84	DRAWING NO 52-C001	
TRACED	APP'D		

52 SERIES AIR CONDITIONER/LIQUID CHILLER
Illustrated Parts List

Specify Model and Serial Numbers when ordering Parts

Item No.	Part No.	Qty.	Description
1	10-1004-04	1	Inlet filter
2	52-9007-00	1	Lower access panel
3	52-6013-01	2	Filter angle
4	52-9008-00	1	Upper access panel
5	52-9004-01	1	Side panel, left hand
	52-9004-02	1	Side panel, right hand
6	52-6041-00	71	Screw #10-24 x ⅜", self tapping
7	52-6144-00	2	Hole plug ½"
8	52-9017-01	1	Hydraulic port assembly
9	52-9014-00	1	Bottom coil mounting bracket
10	52-9001-00	1	Condenser coil
11	52-9015-00	1	Top coil block-off
12	52-9009-00	1	Top panel & blower mounting
13	52-9000-00	1	Mounting gasket kit
14	52-6073-00	4	Screen
15	52-9020-01	1	Condenser blower
16	16-7031-00	8	Nut #10-32
17	52-6051-00	1	Capacitor, condenser blower
18	52-6078-00	2	Rubber boot, capacitor
19	52-6035-18	1	Power cord
20	52-6044-00	1	Connector
21	10-1032-01	1	Capacitor, compressor
22	52-6022-01	1	Strap, capacitor
23	52-9016-00	2	Top coil mounting bracket
24	52-9003-00	1	Compressor mount
25	10-1042-00	1	Start relay
26	52-6027-03	1	Hot gas by-pass
27	10-1040-00	1	Thermostatic expansion valve
28	52-6028-02	1	Filter/dryer
29	10-1041-00	1	Solenoid valve
30	10-1032-02	1	Start capacitor
31	52-6022-02	1	Strap, capacitor
32	52-6021-00	1	Grommet
33	52-6021-01	2	Grommet
34	52-6062-00	1	Lockwasher, split ⅜"
35	52-6063-00	1	Nut ⅜" – 16
36	52-9012-00	11	Stiffener
37	52-9013-01	1	Block-off evaporator coil left
38	52-9013-02	1	Block-off evaporator coil right
39	52-9006-00	1	Condensate pan
40	52-9005-00	1	Bottom & blower mount
41	12-1012-00	1	Grill
42	12-1012-01	1	Evaporator fan
43	11-1002-00	1	Evaporator coil
44	52-9011-00	1	Bulkhead
45	10-1005-02	1	Power relay
46	10-1014-01	4	Pan head screw #6 – 32 x ¾"
47	52-9002-00	1	Heat exchanger
48	52-6058-00	1	Accumulator
49	52-6038-00	4	Nut 5/16" – 18
50	52-6042-00	4	Lockwasher split 5/16"
51	52-6066-01	4	Grommet
52	52-6066-02	4	Sleeve
53	10-1026-24	1	Compressor
54	52-6039-00	4	Flat washer 5/16"
55	52-6037-00	4	Cap screw 5/16" – 18 x 1½"
56	10-1003-06	1	Terminal Block
57	52-6042-00	1	Clamp, drain hose
58	10-1017-00	1	"P" trap
59	52-6074-00	1	Drain hose condensate
60	10-1004-03	1*	Suppressor
61	10-1033-00	1*	Snap disc thermostat
62	52-6100-00	1*	Thermostat control
63	30-4024-00	2*	Lift hinge

*Asterisk denotes optional equipment

Accessories

Description	Part No.
Thermostatic Kit (Customer installed)	52-6100-00
Disposable inlet air filter	10-1000-11
Filter coat – 1 pt. aerosol	52-6064-02
Filter coat – 1 pt. spray dispenser	52-6064-03
Gray touch-up paint – 12.5 oz. aerosol	10-1018-00

EXPLODED VIEW

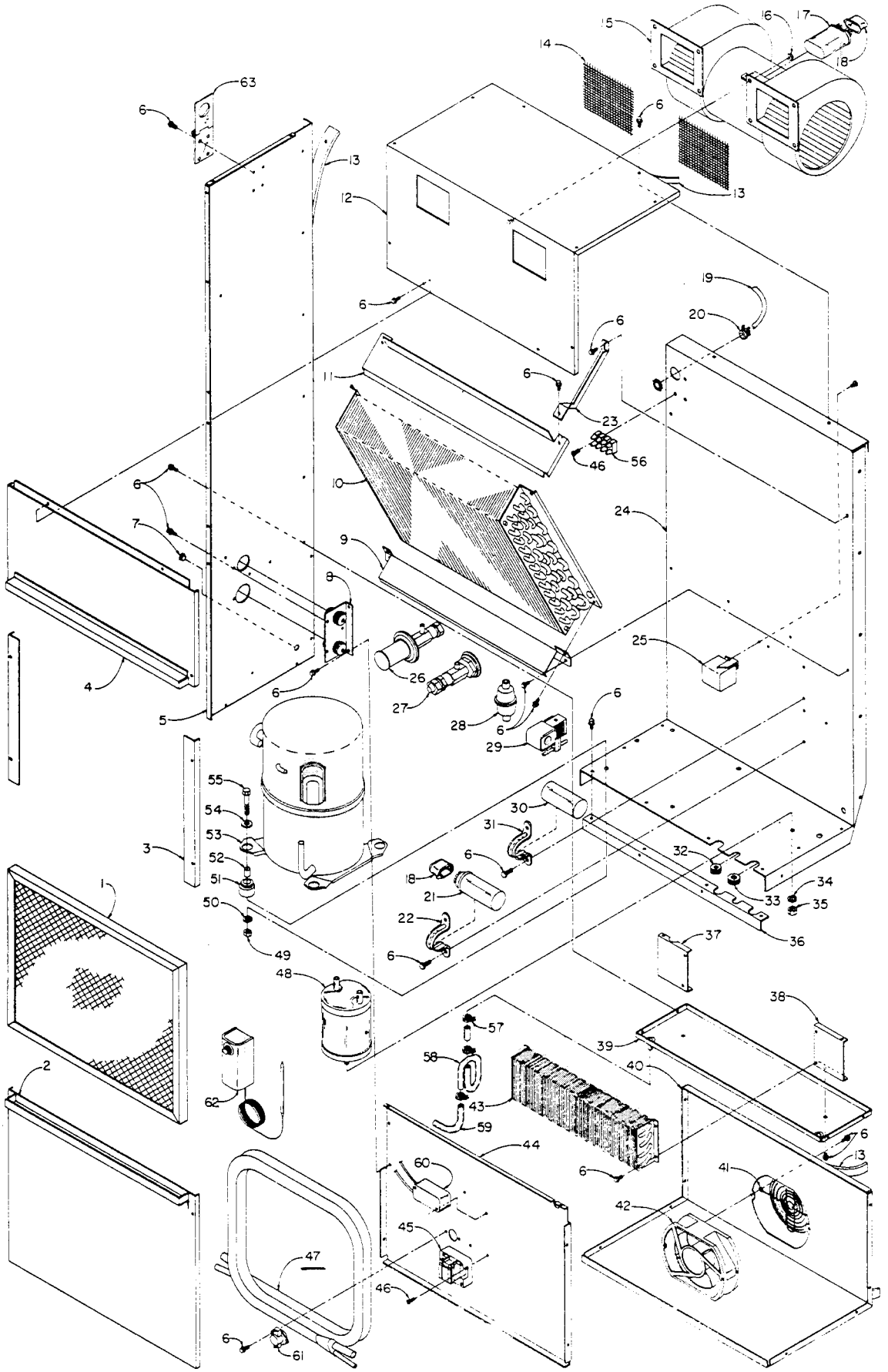

WIRING SCHEMATIC

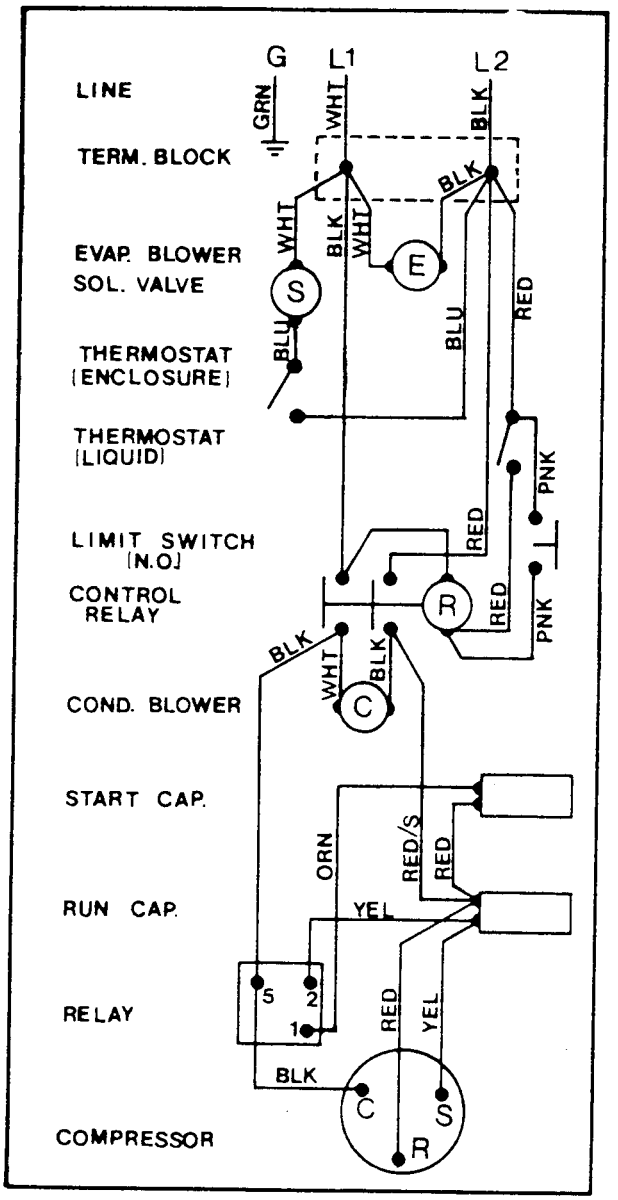

10-1001-57

McLean Thermostatic Control

Johnson Controls, Inc.
Control Products Division

1302 E. Monroe St.
Goshen, IN 46526

Series A19 Temperature Controls—Single-Pole, Single-Throw and Single-Pole, Double-Throw Models with NEMA 1 Enclosure

Application

These controls are designed to cover a broad range of general purpose operating temperature control applications in the refrigeration, air conditioning and heating field with a minimum number of models. Typical applications are: frozen food cases, display cases, beverage coolers, milk coolers, etc. Various control ranges are available.

Controls are supplied with an adjustable range (except models with factory sealed settings) and adjustable or non-adjustable differential.

These controls are designed for open high and open low applications. Where critical or high value products are to be maintained within a specific temperature differential, a single control should not be applied to function as both an open high and open low control. In these applications, a separate back-up control with alarm contacts should be wired to indicate when the back-up control operates.

Installation

Follow equipment manufacturer's instructions if provided. If instructions are not provided proceed as follows:

Mounting:

Controls are normally mounted to a surface through holes in back of case.

For closed tank applications without well assembly Part No. FTG13A-600R packing nut assembly may be supplied. See Fig. 3 for sequence of installation. Put parts over support tube section of element, placing bulb into tank. Tighten ½" NPT adapter. Screw packing nut into adapter with the retaining washers and packing in place as shown.

To install models supplied with bulb well, first install bulb well into tank. Remove bushing from bulb well and slide bushing over capillary. Replace bushing into bulb well. Push bulb into position in bottom of well. Tighten set screw in end of adapter to hold bulb in position. See Fig. 4 for bulb well illustration.

CAUTION: Do not dent or deform the sensitive bulb of this control. A dent or deformation will change the calibration and cause the control to cycle at a temperature lower than the dial setting. When the bulb mounting clip is used to mount the bulb near the refrigerant tubing, be sure the sheet metal screw does not pierce the tubing.

Adjustments

Series A19 temperature controls may be supplied with an external range adjustment and screwdriver slot as shown in Fig. 1, range adjustment knob or solid cover (Fig. 7). Solid cover models with calibrated dial are adjusted by removing cover and moving dial so desired setting is in line with the slot in cutout stop bracket (see Fig. 8). Convertible adjustment models can be field converted from concealed screwdriver slot adjustment to knob adjustment or external screwdriver slot adjustment. They are supplied with a snap-in plug in the cover to provide concealed screwdriver slot adjustment. For knob adjustment remove the snap-in plug and assemble the knob to the slotted shaft by tightening the Allen-head screw in the center of the knob. For external screwdriver slot adjustment remove the snap-in plug. The convertible adjustment models with remote bulb include a bulb mounting clip.

Dial settings normally indicate the cutout setting unless otherwise specified by the equipment manufacturer. Models with SPDT

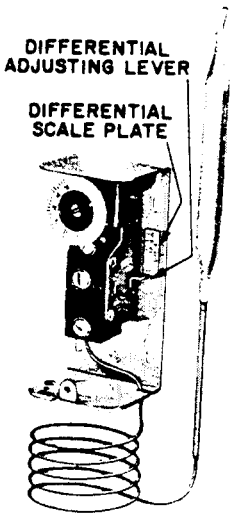

Fig. 1 — Series A19 with external range adjustment and screwdriver slot.

contacts are normally set so the red (common) to blue contacts open at the dial setting.

Models with adjustable differential and ranges of 20/80° F (−5/28° C), −30/50° F (−35/10° C) and −30/100° F (−35/40° C) have a differential scale plate showing differential in degrees. Other ranges have a scale plate (see Fig. 1) with a multiplier shown. For example when "min" differential is 5° F (2.8° C) then X2 is 10° F (5.6° C), X3 is 15° F (8.3° C), etc. The controls are supplied with adjusting lever at minimum differential stamped on

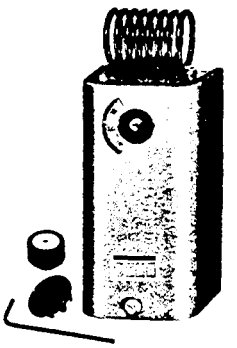

Fig. 2 — The Space Thermostats with convertible adjustment have a snap-in plug in the cover, built-in screwdriver slot and a knob assembly for field installation.

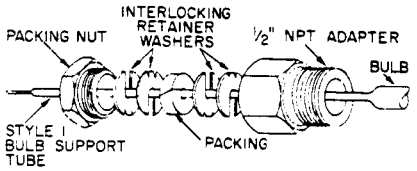

Fig. 3 — Part No. FTG13A-600R packing nut assembly. (Used with swaged bulb with support tube for direct immersion application.)

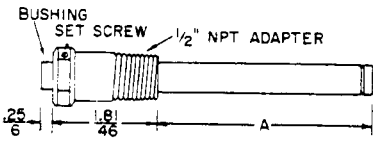

BULB WELL NUMBER	DIMENSION "A"
WEL14A-600R(MONEL)	4.75(121)
WEL14A-602R	4.94(125)
WEL14A-603R	5.81(148)
WEL16A-601R	2.81(71)

Fig. 4 — Bulb well for liquid immersion applications where a temperature bulb may be removed without draining tank.

the control. To adjust move the lever to the differential required.

Low cutout or high cutout stop supplied on certain models (specified by the equipment manufacturer).

If high or low cutout stop adjustment is required proceed as follows:

1. Set dial to temperature at which stop is desired.
2. Remove cover of the control.
3. Slide dial cutout stop to front of thermostat against plastic step behind dial as shown in Fig. 8. (On models with convertible adjustment loosen the stop screw, slide the screw to the desired stop setting and tighten screw, see Fig. 9.) Sometimes an exact stop setting is not possible and stop must be set to the closest step corresponding to dial setting required.
4. Replace cover.

Wiring

CAUTION: Disconnect power supply before wiring connections are made to prevent possible electrical shock or damage to equipment.

All wiring should conform to the National Electrical Code and local codes. Single-pole, double-throw models should be wired as shown in terminal drawing. Use copper conductor only. (See Fig. 5.)

CAUTION: Use No. 8-32 x ¼" terminal screws. Longer terminal screws can interfere with switch mechanism and damage the switch.

Checkout Procedure

Before applying power, make sure installation and wiring connections are according to job specifications.

After the necessary mechanical adjustment and electrical connections have been made, an operational checkout is recommended.

Adjust the control set point to put the system in operation and run through at least one complete cycle before leaving installation.

If the system fails to operate, recheck the wiring and components.

Repairs and Replacement

Field repairs must not be made except for replacement cover and knob (convertible adjustment models only). For replacement control, cover or knob contact the nearest Johnson Controls wholesaler.

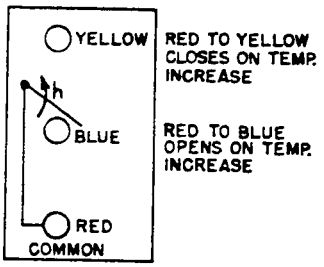

Fig. 5 — Terminal arrangement of SPDT models.

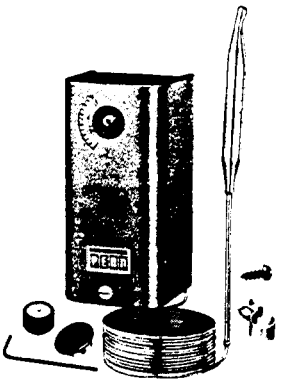

Fig. 6 — Series A19 with remote bulb and convertible adjustment has a snap-in plug in the cover, a knob assembly for field installation and a bulb mounting clip.

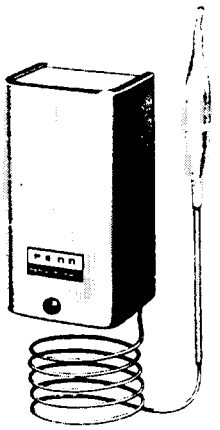

Fig. 7 — Series A19 with solid cover and concealed adjustment.

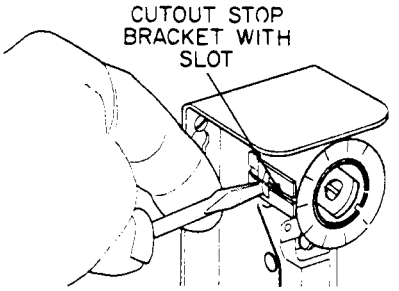

Fig. 8 — Sliding stop to front of control to set cutout stop.

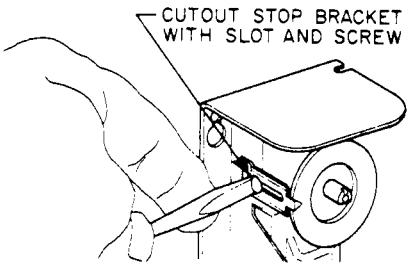

Fig. 9 — The convertible adjustment controls have a screw type cutout stop. The stop screw must be loosened and moved to the stop setting desired. Tighten screw after setting is made.

Litho in U.S.A. 0881-Z

McLean Malfunction Switch

Johnson Controls, Inc.
Control Products Division

1302 E. Monroe St.
Goshen, IN 46526

Series 210 and P20 Replacements Installation and Modification Guide

General Description

P20BB-1

Low pressure control (SPST) with lockout. Requires manual reset.

Factory setting:

Contacts open at 40 psig (276 kPa) on pressure drop. Range of cutout is 7 to 125 psig (48 to 862 kPa).

P20DB-1

High pressure control (SPST) with lockout. Requires manual reset.

Factory setting:

Opens at 400 psig (2758 kPa) on pressure increase. Range of cutout is 170 to 450 psig (1172 to 3103 kPa).

P20EB-1

Low pressure control with SPDT contact unit and automatic recycle. (Screws and connectors are supplied in the Red and Yellow terminal locations only.)

Factory setting:

Red to yellow contacts open at 40 psig (276 kPa) on pressure drop; close at 65 psig (448 kPa) on pressure increase.
Red to blue contacts open on pressure increase.

Differential is factory set at 25 psi (172 kPa). Range of cutout is 7 to 125 psig (48 to 862 kPa).

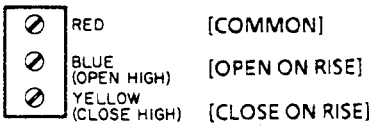

P20EB-2

High pressure control with SPDT contact unit and automatic recycle. (Screws and connectors are supplied in the Red and Blue terminal locations only.)

Factory setting:

Red to blue contacts open at 400 psig (2758 kPa) on pressure increase; close at 330 psig (2275 kPa) on pressure drop.
Red to yellow contacts open on pressure drop.

Differential is factory set at 70 psi (483 kPa). Range of cutout is 170 to 450 psig (1172 to 3103 kPa).

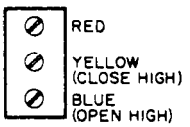

Preparation for Installation

CAUTION: Disconnect the power supply before attempting to disconnect the old control and before connections are made to new control to prevent possible electrical shock or damage to the equipment.

1. Electrical

A. Arkles connectors are furnished as standard. If you do not use Arkles, remove and salvage terminal screws from control being removed. If double Arkles terminals are used, remove and use old double Arkles terminals.

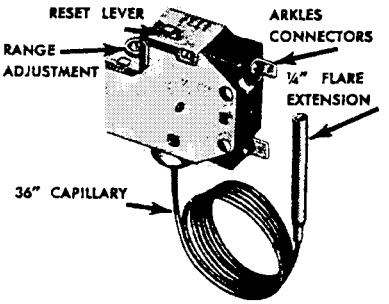

Fig. 1

B. Special Arkles on control being replaced. Salvage and use.

C. When SPDT action on a P20EB control is required, use a terminal screw and connector from the old control and place in the open terminal location.

D. Reverse action for a P20EB control can be obtained as follows:

P20EB-1 —

Move the terminal screw and connector from the yellow terminal location to the blue terminal location.

P20EB-2 —

Move the terminal screw and connector from the blue terminal location to the yellow terminal location.

NOTE: Use the terminal screws furnished (8-32 x ¼" binder head). Substitution of other screws may cause problems in making proper connections.

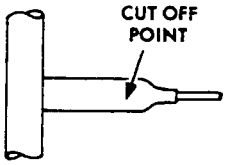

Fig. 2

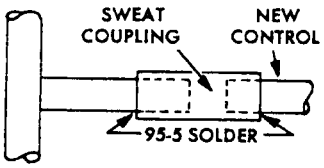

Fig. 3

2. Pressure Connection

A. No flare nut is provided. If replaced control uses flare nut, remove existing flare nut, install on new control, flare ¼" flare extension and hook it up.

B. If existing control has ¼" flare extension silver soldered into system, cut off from system as far as possible from point of connection and use a ¼" sweat coupling as shown (Figs. 2 and 3). Clean and solder as shown.

C. If present installation uses more than 36" capillary, use additional length of ¼" tubing, attached to system as shown (Fig. 3) to a point near control and attach control as shown in Fig. 3 or use flare nuts and flare union.

D. If present installation does not use a ¼" flare extension but has capillary silver soldered directly into system, it will be necessary to remove the flare extension from the replacement control and re-solder into system. Extreme care must be taken in cutting the capillary so the opening is not closed. This can be done by grooving with knife or tube cutter and breaking tube. Be sure the tubing is inserted far enough that the solder does not run over the end of the tubing sealing off the capillary.

CAUTION: Do not use too much solder — just enough to seal joint.

E. If original equipment uses a flare extension with 90° bend — cut line off beyond bend or use ¼" 90° sweat elbow instead of sweat coupling.

3. Brackets

A. Salvage the existing bracket when replacing a 210 or P20.

B. A special bracket is included to interchange the 210 or P20 with control of other manufacture.

C. Use the screws provided with replacement control for mounting.

4. Settings

NOTE: It is important that original equipment manufacturer's settings be duplicated when replacing the controls.

A. Range Adjustment

Range adjustment screw is shown in Fig. 1. Turn clockwise to increase cutout setting; counter-clockwise to lower cutout setting.

One complete counter-clockwise turn of the range adjustment screw lowers the setting approximately:

Low pressure range, 7/150 psig (48/1034 kPa) — lowers 20 psig (138 kPa).

High pressure range, 100/450 psig (690/3103 kPa) — lowers 100 psig (690 kPa).

B. Differentials

Be sure the differential of the suggested replacement is satisfactory for the specific application.

5. General

A. If 36" capillary tube is not needed for hookup, uncoil only enough to use and secure surplus capillary so it does not vibrate or rub against any metal surface where friction can damage the capillary.

NOTE: Vibration of copper tubing causes work hardening, crystallization, and breakage. Broken capillary tubes leak refrigerant and cause unnecessary and expensive service to equipment.

Checkout Procedure

Before leaving the installation, observe at least three complete operating cycles to be sure that all components are functioning correctly.

Litho in U.S.A. 0284

WARRANTY

HOLD HARMLESS

In consideration of purchase of equipment from McLean Midwest by a customer, McLean Midwest agrees to indemnify and hold harmless such customer and users of such equipment, and to provide such customer and users with a defense, as to any claim, demand, statutory court cost, fees for attorneys' services provided for below, and/or judgment, for actual or alleged patent infringement in any country, arising out of the use, sale or advertisement of any equipment manufactured or sold by McLean Midwest to McLean Midwest's own specifications, provided that the customer or user shall promptly notify McLean in writing of any such claim or demand, provided further that McLean shall have the right and option, to undertake and control the entire defense of such claim or demand instituted against the customer or user, but limited to the products made or sold by McLEAN, through counsel selected by McLEAN, and to settle and pay any claim or award arising out of such claim or demand, and provided further that the customer or user will provide such information and assistance as McLEAN may request subject to reimbursement by McLEAN for any out-of-pocket expense incurred in providing such requested assistance. Liability of McLEAN for any infringement or claim thereof shall be limited to the above undertaking.

WARRANTY POLICY

McLean Midwest warrants that all material and workmanship are free of defects in quality which impair the usefulness of the product for a period of five (5) years for non-operating parts, except for the filter; for 2½ years for the air moving devices, and for one (1) year for the hermetic system components, when installed and operated under the following conditions.

A. Maximum voltage variation no greater than plus or minus 10% of nameplate nominal rating.

B. Maximum frequency variation no greater than plus or minus 3 Hz. of nameplate nominal rating.

C. Must not exceed minimum and maximum stated temperatures on the nameplate.

D. Not to exceed (BTU/HR) rating, including any heat sink, as indicated on the nameplate.

E. The unit must not be restarted for a period of one (1) minute after intentional or accidental shut-off.

Not covered in this warranty is damage to the air conditioner due to the introduction of other than the nameplate designated refrigerant, operation in an abnormal or corrosive atmosphere, or prolonged operation with dirty filters.

Should any part prove defective within the above stated time periods, McLean Midwest will repair the part or provide a replacement (new or rebuilt) part at McLean Midwest's option without charge, but will not provide labor or reimbursement for labor for removal or installation of any such part. Parts supplied as warranty replacement parts will assume the balance of the warranty on the part returned for warranty consideration.

McLean Midwest assumes no liability beyond the repair or replacement of its own product, returned transportation prepaid. Customer modification of any McLean Midwest product voids this warranty.

The purchaser assumes the responsibility of grounding the unit and installing it in accordance with local electrical and safety codes, as well as the National Electric Code (NEC) and OSHA.

This express warranty constitutes the entire warranty with respect to the PRODUCT and IS IN LIEU OF ALL OTHERS, EXPRESS OR IMPLIED, INCLUDING ANY WARRANTY OF MERCHANTABILITY AND WARRANTY OF FITNESS FOR A PARTICULAR PURPOSE AND IN NO EVENT IS McLEAN MIDWEST RESPONSIBLE FOR ANY CONSEQUENTIAL DAMAGES OF ANY NATURE WHATSOEVER.

ALLEN-BRADLEY/STROMBERG
Drives Division
Cedarburg, Wisconsin 53012-0005

Publication 1352-5.0 – March, 1987

p/n 502602

Printed in U.S.A