Allen-Bradley

Compact I/O DeviceNet Scanner Module, Firmware Revision 4.4

Catalog Number 1769-SDN/B

Enhancements

These enhancements are supported only when the 1769-SDN scanner module is used with a 1769-L3*x* or 1768-L4*x* CompactLogix™ controller. Other controllers do not support these features, even when used with the most current 1769-SDN scanner module firmware.

IMPORTANT The 1769-L35E controller does not support the ability to configure the controller via a connection originating on a DeviceNet device. Bridging is supported in only one direction—originating from the controller to a DeviceNet device.

This release of the firmware includes these enhancements.

Table 1 - Firmware Enhancements

Firmware Revision	Enhancement	Description
4.1	AutoScan functionality available	The DeviceNet AutoScan feature enables a scanner to automatically map a network of slave devices into its scanlist without the use of RSNetWorx™ for DeviceNet software. This greatly improves the ease of setting up a DeviceNet network, especially networks comprised of simple devices. For more information on using this feature, refer to the Compact I/O™ DeviceNet Scanner Module User Manual, publication 1769-UM009.
3.9	DeviceNet Easy Backup on CompactLogix controller	Allows easy scanner backup on the DeviceNet network masters. This feature lets you use CompactLogix controllers in small back-up controller applications that require a fast switchover from primary to secondary controller. For more information on using this feature, refer to the Compact I/O DeviceNet Scanner Module User Manual, publication 1769-UM009. The Easy Backup feature is not supported in MicroLogix™ 1500 controllers.
	Increases explicit message size	Explicit message size has been increased from 250 bytes to 330 bytes.

Table 1 - Firmware Enhancements (continued)

Firmware Revision	Enhancement	Description
2.2	Explicit messaging via a 1769-35E or 1769-L43 CompactLogix controller	Use any of these paths to reach a device on the local DeviceNet network. You can also use these paths to send the scanlist to the local 1769-SDN scanner module, update the firmware of the local 1769-SDN scanner module, or change a configuration setting (such as DeviceNet communication rate) of the local 1769-SDN scanner module: • Connect to the Ethernet port of a 1769-L35E or 1769-L43 controller and bridge across the backplane and out the 1769-SDN scanner module. • Connect to the serial port of a 1769-35E and 1769-L43 controller and bridge across the backplane and out the 1769-SDN scanner module. • Program a MSG instruction in the 1769-35E and 1769-L43 controller with a destination to a device on the local 1769-SDN scanner module DeviceNet network.
	You can use a 1769-35E or 1769-L43 controller to configure a 1769-SDN scanner module in a remote chassis	Connect to the Ethernet port of a 1769-35E or 1769-L43 controller. Bridge across the backplane, out the local 1769-SDN scanner module, and across the DeviceNet network to a remote 1769-SDN scanner module and configure its scanlist. **Important:** You **cannot** start from a DeviceNet connection and bridge through the 1769-SDN scanner module to program a controller. 1769-SDN scanner module firmware earlier than revision 2.2 does not support this bridging feature, so you must initially use a DeviceNet connection to update the firmware to revision 2.2. Any subsequent updates can then be done via a bridged connection through a 1769-35E and 1769-L43 controller.
	You can use the 1769-SDN scanner module to view and configure devices	This revision adds the capability to view and configure devices connected to the bus side of a 1734-ADN module.

Corrected Anomalies

This release of the firmware includes these corrected anomalies.

Table 2 - Firmware Corrected Anomalies

Firmware Revision	Description
4.4	**CORRECTED:** The scanner module displays error code ER-64-20-E0. When this error occurs, the scanner's Module and Network status indicators are solid red. Power must be cycled to the controller to recover from the error. Lgx00126331
	CORRECTED: When in Easy Backup mode, the scanner module stops functioning and displays error code ER-99-FF. When this error occurs, the scanner's Module and Network status indicators are solid red. Also, the scanner disappears from RSLinx™ software. Lgx00127544
	CORRECTED: Network devices are unrecognized when you browse the DeviceNet network via RSLinx and RSNetWorx™ software. In the software, a question mark appears in place of the network devices. Lgx00130255

Table 2 - Firmware Corrected Anomalies (continued)

Firmware Revision	Description
4.3	**CORRECTED:** If a SmartGuard™ 600 Safety Controller is added to the 1769-SDN scanner module's scan list and then it is downloaded to the Smart Guard Controller, every other pass fails. Lgx00093911
	CORRECTED: Ethernet bridging causes improper fault message during SmartGuard Controller Lock or Unlock. The error messages in RSNetWorx for DeviceNet software indicate that the Lock or Unlock do not complete successfully, when in fact they do complete successfully. Lgx00094854
	CORRECTED: When ADR and CompactLogix Backup System are enabled at the same time, I/O modules fault. Lgx00099843
	CORRECTED: The 1769-SDN scanner module stops sending Ack messages for COS responses causing sporadic communication errors. Lgx00117346
4.2	**CORRECTED:** Listen-only inputs change state unexpectedly. The 1769-SDN scanner module incorrectly processes and produces input data for a secondary controller in the system. When you are using CompactLogix Backup in your CompactLogix system, listen-only inputs producing data for the secondary controller may change state undesirably and send that controller random data. When this anomaly occurs, the input data in the secondary controller changes randomly, while the input data in the primary controller remains unchanged.
3.10	**CORRECTED:** RSNetWorx software communication error. If a DeviceNet networked device has more than 130 bytes of mapped input or output data, the scanlist download to the 1769-SDN scanner module is unsuccessful.
3.9	**CORRECTED:** 1769-SDN scanner module stops producing packets. The 1769-SDN scanner module stops producing packets if the EPR is set to zero and then set to a non-zero value.

Known Anomalies

This release of the firmware includes these known anomalies.

Firmware Revision	Description
3.9	Error code 91 displayed. The alphanumeric display on the 1769-SDN scanner module could display error code 91 under these conditions: • When power to the scanner module is cycled • When a DeviceNet network cable becomes disconnected or broken

Application Notes

Keep these considerations in mind when developing an application that will have either bridged messages through the CompactLogix controller or messages that originate from the CompactLogix controller to the DeviceNet network:

- Do not send more than four simultaneous messages to any single module on the backplane.
- Write code to monitor for failed message delivery and to properly handle retries.
- The controller properly handles simultaneous messaging from message instructions and bridging messages from an EtherNet/IP connection.

  For example, you can use RSLinx® or RSNetWorx software bridging from the EtherNet/IP network across the backplane to configure a device on a DeviceNet network.
- The 1768-L4*x* controllers support as many as eight simultaneous messages to the Compact I/O subsystem and as many as four simultaneous messages to any one module in the Compact I/O configuration.

Installing the 1769-SDN Scanner Module Firmware Upgrade

Perform the following tasks to install the firmware upgrade.

Install EDS Files

If you are using RSLinx software, version 2.41.00 or later, you must install the 1769-SDN scanner module EDS files.

Follow these steps to install the EDS files.

1. Locate the appropriate EDS files and copy all the files to a temporary subdirectory on your hard drive:
   - EDS files are available on the RSLogix™ 5000 programming software CD.
   - You can also download the EDS files from the following location:

     http://www.ab.com/networks/eds/cgi-bin/detail.pl?file=DN/0001000C00690400.eds
2. Use the EDS Hardware Installation tool in RSLinx communication software to install the EDS files.

   a. Shut down all applications using RSLinx communication software.
   b. Shut down RSLinx communication software.
   c. Choose Start>Programs>Rockwell Software>Tools>EDS Hardware Installation Tool to start the tool.
   d. Follow the on-screen instructions.
   e. Make sure to select Register a directory of EDS files and point to the directory where you saved the above EDS files.

Install 1769-SDN Scanner Module Firmware

If you have an existing 1769-SDN scanner module, you must upgrade the module's firmware to take advantage of the new features.

1. Locate the appropriate firmware and copy all the files to a temporary subdirectory on your hard drive.

   Firmware files are available on the RSLogix 5000 software CD.
2. Use the ControlFLASH™ utility that ships with RSLogix 5000 programming software.

   You can also download the firmware upgrade files at http://www.rockwellautomation.com/support

TIP You must use a DeviceNet network connection to update the 1769-SDN scanner module firmware to revision 3.10. After the firmware is updated to revision 3.10, subsequent updates to the 1769-SDN scanner module firmware can be initiated via a controller backplane connection.

Change or Configure the Node Address

You can use the Node Commissioning Tool in RSNetWorx for DeviceNet software to change or configure the node address of a local 1769-SDN scanner module.

The commissioning tool does not let you select a node address for a 1769-SDN scanner module if that node address is being used by a local module, even though the two addresses are completely independent of one another.

For example, if you try to set the node address for a 1769-SDN scanner module via the Ethernet network, through a 1769-L35E controller, and onto the 1769 bus (not via the DeviceNet network), the tools says that the nodes occupied by 1769 I/O modules are not available for DeviceNet node numbers.

To work around this, in RSNetWorx for DeviceNet software, access the DeviceNet network and select the 1769-SDN scanner module.

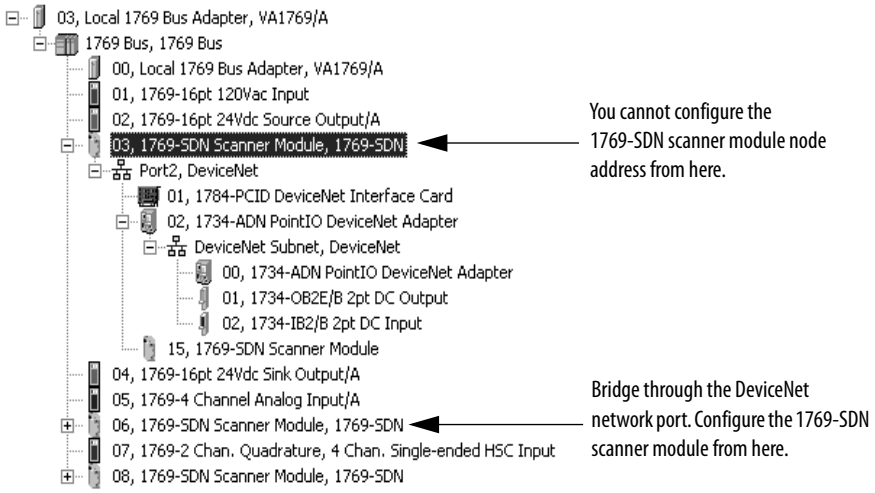

Additional Resources

These documents contain additional information concerning related products from Rockwell Automation.

Resource	Description
Logix5000 Controllers Common Procedures, publication 1756-PM001	Developing projects for Logix5000™ controllers.
Compact I/O DeviceNet Scanner Module User Manual, publication 1769-UM009	Configuring, bridging, connecting, and controlling your DeviceNet network.
1769-SDN Compact I/O DeviceNet Scanner Module Installation Instructions, publication 1769-IN060	Installing the 1769-SDN scanner module and technical specifications.
Industrial Automation Wiring and Grounding Guidelines, publication 1770-4.1	General guidelines for installing a Rockwell Automation® industrial system.
Product Certifications website, http://www.ab.com	Declarations of conformity, certificates, and other certification details.

You can view or download publications at http://www.rockwellautomation.com/literature/. To order paper copies of technical documentation, contact your local Allen-Bradley® distributor or Rockwell Automation sales representative

Rockwell Automation Support

Rockwell Automation provides technical information on the Web to assist you in using its products. At http://www.rockwellautomation.com/support, you can find technical manuals, technical and application notes, sample code and links to software service packs, and a MySupport feature that you can customize to make the best use of these tools. You can also visit our Knowledgebase at http://www.rockwellautomation.com/knowledgebase for FAQs, technical information, support chat and forums, software updates, and to sign up for product notification updates.

For an additional level of technical phone support for installation, configuration, and troubleshooting, we offer TechConnect℠ support programs. For more information, contact your local distributor or Rockwell Automation representative, or visit http://www.rockwellautomation.com/support/.

Installation Assistance

If you experience a problem within the first 24 hours of installation, review the information that is contained in this manual. You can contact Customer Support for initial help in getting your product up and running.

United States or Canada	1.440.646.3434
Outside United States or Canada	Use the Worldwide Locator at http://www.rockwellautomation.com/support/americas/phone_en.html, or contact your local Rockwell Automation representative.

New Product Satisfaction Return

Rockwell Automation tests all of its products to ensure that they are fully operational when shipped from the manufacturing facility. However, if your product is not functioning and needs to be returned, follow these procedures.

United States	Contact your distributor. You must provide a Customer Support case number (call the phone number above to obtain one) to your distributor to complete the return process.
Outside United States	Please contact your local Rockwell Automation representative for the return procedure.

Documentation Feedback

Your comments will help us serve your documentation needs better. If you have any suggestions on how to improve this document, complete this form, publication RA-DU002, available at http://www.rockwellautomation.com/literature/.

www.rockwellautomation.com

Power, Control and Information Solutions Headquarters

Americas: Rockwell Automation, 1201 South Second Street, Milwaukee, WI 53204-2496 USA, Tel: (1) 414.382.2000, Fax: (1) 414.382.4444
Europe/Middle East/Africa: Rockwell Automation NV, Pegasus Park, De Kleetlaan 12a, 1831 Diegem, Belgium, Tel: (32) 2 663 0600, Fax: (32) 2 663 0640
Asia Pacific: Rockwell Automation, Level 14, Core F, Cyberport 3, 100 Cyberport Road, Hong Kong, Tel: (852) 2887 4788, Fax: (852) 2508 1846

Publication 1769-RN007H-EN-P - October 2012
Supersedes Publication 1769-RN007G-EN-P - February 2012