Reference Manual

Allen-Bradley

Bulletin 1606 Switched Mode Power Supplies

Catalog Number: 1606-XLS240-UPS

Index

Terminology and Abbreviations

- **DC-UPS**—Uninterruptible power supply with DC Input.
- **Normal mode**—Describes a condition in which the battery is charged, the input voltage is in range and the output is loaded within the allowed limits.
- **Buffer mode**—Describes a condition where the input voltage is below the transfer threshold level, the unit is running on battery (buffering) and the output is loaded within the allowed limits.
- **Charging mode**—Describes a condition where the battery is in the process of charging, the input voltage is in range and the output is loaded within the allowed limits.
- **Inhibit mode**—Describes a condition where buffering is intentionally disabled by using the inhibit input of the DC UPS (e.g. to perform service actions or to save battery capacity).
- **Buffer time**—This term is equivalent to "hold-up time."
- **T.b.d.**—To be defined, value or description will follow later.

DC-UPS Control Unit

- Requires Only One 12V Battery for a 24V Output
- Stable Output Voltage in Buffer Mode
- Superior Battery Management for Longest Battery Life
- Comprehensive Diagnostic and Monitoring Functions
- Replace Battery Signal Included
- Electronically Overload and Short Circuit Protected
- 50% Power Reserves
- Selectable Buffer Time Limiter
- 3 Year Warranty

1. Description

This uninterruptible power supply (UPS) controller 1606-XLS240-UPS is an addition to standard 24V power supplies to bridge power failures or voltage fluctuations. Expensive downtimes, long restart cycles and loss of data can be avoided.

The DC-UPS includes a professional battery management system which charges and monitors the battery to achieve the longest battery service life as well as many diagnostic functions that ensure a reliable operation of the entire system.

A unique feature of the 1606-XLS240-UPS is that only one 12V battery is required to buffer the 24V output. This makes matching batteries unnecessary and allows a precise battery charging and testing.

The 1606-XLS240-UPS requires one external 12V battery for which two preassembled battery modules are available: a lightweight 7Ah battery that can be mounted on the DIN rail and a 26Ah module that can be panel-mounted for longer buffer times.

In addition to the 1606-XLS240-UPS, the 1606-XLS240-UPSC UPS includes the same controller with an integrated 5Ah battery.

2. Specification Quick Reference

Input voltage range	nom. 24Vdc 22.5-30Vdc	
Output current	min.15A min. 10A	Normal mode Buffer mode
Output voltage	typ. 0.23V lower as input voltage 22.25V	Normal mode Buffer mode, 10A
Allowed batteries	3.9Ah to 40Ah	VRLA lead acid
Temperature range	-25 to +70°C	Operational
Derating	0.43A/°C	+60°C to +70°C normal mode
Dimensions	49x124x117mm	WxHxD
Buffer time (at 10A)	typ. 6'45" typ. 55'	7Ah battery module 26Ah batt. module

Typical setup of a DC-UPS system with the 1606-XLS240-UPS:

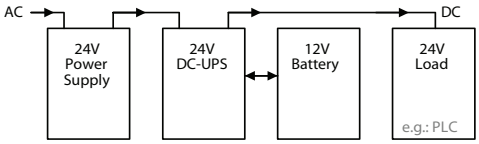

3. Catalog Numbers

DC-UPS	1606-XLS240-UPS	Standard controller
Accessories	1606-XLSBATASSY1	Battery module 12V 7Ah
	1606-XLSBATBR1	Mounting kit w/o battery
	1606-XLSBATASSY2	Battery module 12V 26Ah
	1606-XLSBATBR2	Mounting kit w/o battery
	1606-XLB	Panel/Wall mount bracket

4. Certification Marks

UL 508 (IND. CONT. EQ.) · UL 60950-1 · Class I Div 2 · EMC, LVD · Marine · GOST R · C-Tick · Marine RINA

All parameters are specified at 24V, 10A output load and after a 5 minutes run-in time unless noted otherwise.
It is assumed that the input power source can deliver a sufficient output current

Intended Use

- This device is designed for installation in an enclosure and is intended for the general professional use such as in industrial control, office, communication, and instrumentation equipment.
- Do not use this power supply in aircraft, trains, nuclear equipment or similar systems where malfunction may cause severe personal injury or threaten human life.
- This device is designed for use in non-hazardous, ordinary or unclassified locations.

Installation Requirements

- This device may only be installed and put into operation by qualified personnel.
- This device does not contain serviceable parts. The tripping of an internal fuse is caused by an internal defect.
- If damage or malfunction should occur during installation or operation, immediately turn power off and send unit to the factory for inspection.
- Mount the unit on a DIN rail so that the terminals are located on the bottom of the unit.
- This device is designed for convection cooling and does not require an external fan. Do not obstruct airflow and do not cover ventilation grid (e.g. cable conduits) by more than 30%!
- Keep the following installation clearances: 40mm on top, 20mm on the bottom, 5mm on the left and right sides are recommended when the device is loaded permanently with more than 50% of the rated power. Increase this clearance to 15mm in case the adjacent device is a heat source (e.g. another power supply).

SHOCK HAZARD: Do not use the power supply without proper grounding (Protective Earth). Use the terminal on the input block for earth connection and not one of the screws on the housing.

- Turn power off before working on the device. Protect against inadvertent re-powering
- Make sure that the wiring is correct by following all local and national codes
- Do not modify or repair the unit
- Do not open the unit as high voltages are present inside
- Use caution to prevent any foreign objects from entering the housing
- Do not use in wet locations or in areas where moisture or condensation can be expected
- Do not touch during power-on, and immediately after power-off. Hot surfaces may cause burns.

WARNING: EXPLOSION HAZARDS!

Substitution of components may impair suitability for this environment. Do not disconnect the unit or operate the voltage adjustment or S/P jumper unless power has been switched off or the area is known to be non-hazardous.

All parameters are specified at 24V, 10A output load, 25°C ambient and after a 5 minutes run-in time unless noted otherwise.
It is assumed that the input power source can deliver a sufficient output current.

5. Input

Input voltage	nom.	DC 24V	
Input voltage ranges	nom.	22.5 to 30Vdc	Continuous operation, see Fig. 5-1
		30 to 35Vdc	Temporarily allowed, no damage to the DC-UPS *)
		35Vdc	Absolute maximum input voltage with no damage to the DC-UPS
		0 to 22.5Vdc	The DC-UPS switches into buffer mode and delivers output voltage from the battery if the input was above the turn-on level before and all other buffer conditions are fulfilled.
Allowed input voltage ripple	max.	1.5Vpp	Bandwidth <400Hz
		1Vpp	Bandwidth 400Hz to 1kHz
Allowed voltage between input and earth (ground)	max.	60Vdc or 42.4Vac	
Turn-on voltage	typ.	22.8Vdc	The output does not switch on if the input voltage does not exceed this level.
	max.	23Vdc	
Input current **)	typ.	120mA	Internal current consumption
	typ.	1.1A	Current consumption for battery charging in constant current mode at 24V input See Fig. 8-2 ***)
External capacitors on the input		No limitation	

*) The DC-UPS shows "Check Wiring" with the red LED and buffering is not possible

**) The total input current is the sum of the output current plus the current required to charge the battery during the charging process and the current which is needed to supply the DC-UPS itself. See also Fig. 5-2. This calculation does not apply in overload situations where the DC-UPS limits the output current, therefore see Fig. 5-3.

***) Please note: This is the input current and not the current flowing into the battery in the process of charging. The battery current is indicated in section 8.

Fig. 5-1 **Input voltage range**

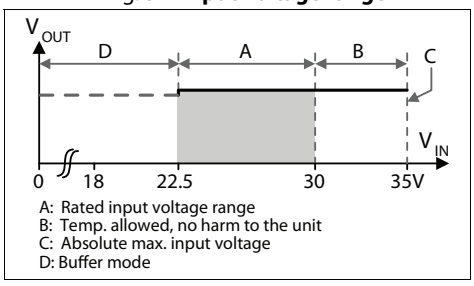

Fig. 5-2 **Input current, definitions**

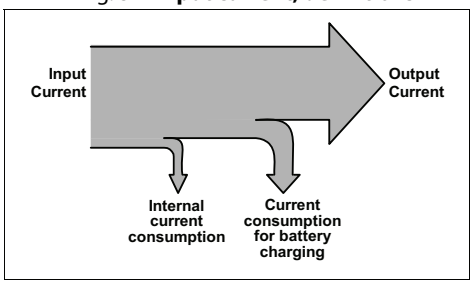

Electronic output current limitation

The DC-UPS is equipped with an electronic output current limitation. This current limitation works in a switching mode which reduces the power losses and heat generation to a minimum. As a result, the output voltage drops since there is not enough current to support the load. A positive effect of the current limit ation in switching mode is that the input current goes down despite an increase in the output current resulting in less stress for the supplying source.

Fig. 5-3 **Input current and output voltage vs. output current, typ. (battery fully charged)**

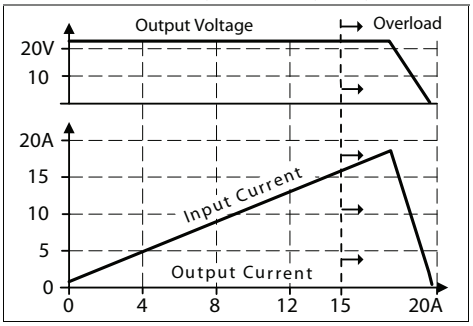

6. Output in Normal Mode

Output voltage in normal mode	nom.	DC 24V	The output voltage follows the input voltage reduced by the input to output voltage drop.
Voltage drop between input and output	max.	0.3V	At 10A output current, see Fig. 6-1 for typical values
	max.	0.45V	At 15A output current, see Fig. 6-1 for typical values
Ripple and noise voltage	max.	20mVpp	20Hz to 20MHz, 50Ohm *)
Output current	nom.	15A	Continuously allowed
Output power	nom.	360W	Continuously allowed
Short-circuit current	min.	17.9A	Load impedance 100mOhm, see Fig. 6-2 for typical values
	max.	21A	Load impedance 100mOhm, see Fig. 6-2 for typical values
Capacitive and inductive loads		No limitation	

*) This figure shows the ripple and noise voltage which is generated by the DC-UPS. The ripple and noise voltage might be higher if the supplying source has a higher ripple and noise voltage.

Fig. 6-1 **Input to output voltage drop, typ.**

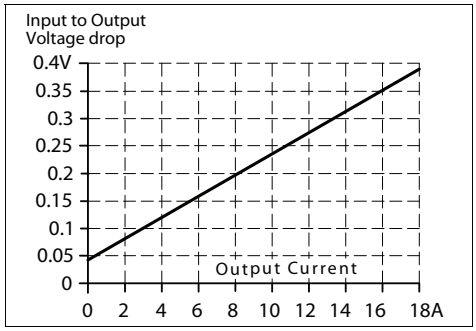

Fig. 6-2 **Output voltage vs. output current in normal mode at 24V input, typ.**

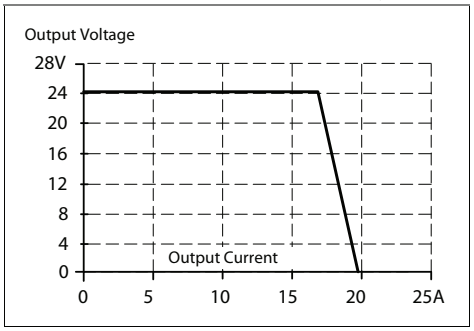

7. Output in Buffer Mode

If the input voltage falls below a certain value (transfer threshold level), the DC-UPS starts buffering without any interruption or voltage dips. Buffering is possible even if the battery is not fully charged.

Output voltage in buffer mode	nom.	DC 24V	Output voltage is stabilized and independent from battery voltage
		22.45V	±1%, at no load,
		22.25V	±1%, at 10A output current
Transfer threshold for buffering	typ.	80mV higher than the output voltage in buffer mode	
Ripple and noise voltage	max.	20mVpp	20Hz to 20MHz, 50Ohm
Output current	nom.	10A	Continuously allowed
		15A	< 5s with full output voltage *)
Short-circuit current	min.	17.9A	Load impedance 100mOhm **)
	max.	21A	Load impedance 100mOhm **)

*) If the output current is in the range between 10A and 15A for longer than 5s, a hardware controlled reduction of the maximal output current to 10A occurs. If the 10A are not sufficient to maintain the 24V, buffering stops after another 5s. Buffering is possible again as soon as the input voltage recovers.

**) If the nominal output voltage cannot be maintained in buffer mode, the DC-UPS switches off after 5s to save battery capacity.

Fig. 7-1 **Buffering transition, definitions**

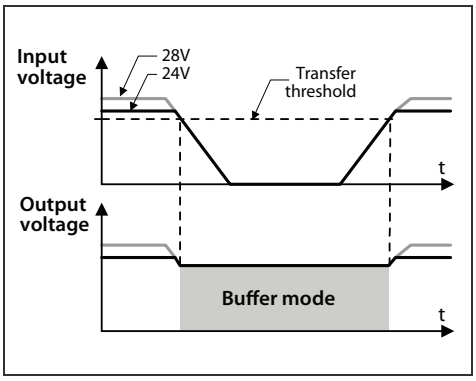

Fig. 7-2 **Transfer behavior, typ.**

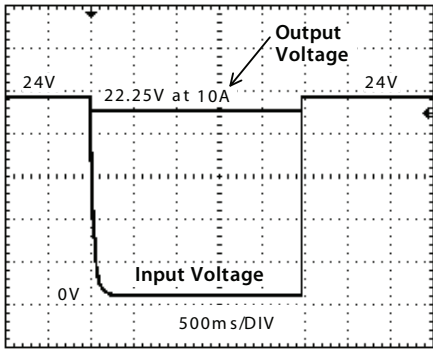

Fig. 7-3 **Available output current in buffer mode**

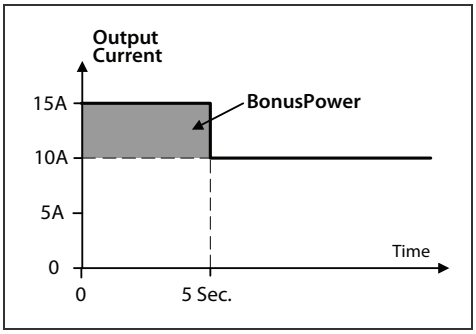

Fig. 7-4 **Output voltage vs. output current in buffer mode, typ.**

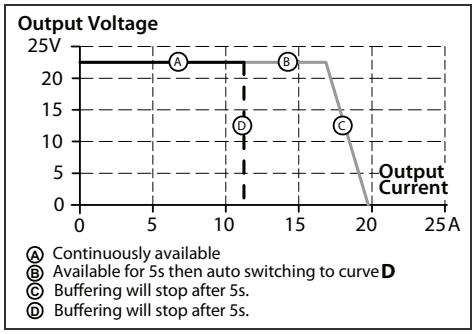

All parameters are specified at 24V, 10A output load, 25°C ambient and after a 5 minutes run-in time unless noted otherwise.
It is assumed that the input power source can deliver a sufficient output current.

8. Battery Input

The DC-UPS requires one 12V VRLA battery to buffer the 24V output.

Battery voltage	nom.	DC 12V	Use one maintenance-free 12V VRLA lead acid battery or one battery module which is listed in the Accessories section.
Battery voltage range		9.0 – 15.0V	Continuously allowed, except deep discharge protection
	max.	35Vdc	Absolute maximum voltage with no damage to the unit
	typ.	7.4V	Above this voltage level battery charging is possible.
Allowed battery sizes	min.	3.9Ah	
	max.	40Ah	
Internal battery resistance	max.	100mOhm	See individual battery datasheets for this value.
Battery charging method		CC-CV	Constant current, constant voltage mode
Battery charging current (CC-mode)	nom.	1.5A	Independent from battery size,
	max.	1.7A	Corresponding 24V input current see Fig. 8-2
End-of-charge-voltage (CV-mode)		13.4-13.9V	Adjustable, see section 14.
Battery charging time	typ.	5h *)	For a 7Ah battery
	typ.	17h *)	For a 26Ah battery
Battery discharging current **)	typ.	21A	Buffer mode, 10A output current, 11.5V on the battery terminal of the DC-UPS, see Fig. 8-1 for other parameters
	typ.	0.3A	Buffer mode, 0A output current
	max.	50µA	At no input, buffering had switched off, all LEDs are off
	typ.	270mA	At no input, buffering had switched off, yellow LED shows “buffer time expired” (max. 15 minutes)
Deep discharge protection ***)	typ.	10.5V	At 0A output current
	typ.	9.0V	At 10A output current

*) The charging time depends on the duration and load current of the last buffer event. The numbers in the table represent a fully discharged battery. A typical figure for a buffer current of 10A is 3h 20 min (200 min) for a 7Ah battery.

**) The current between the battery and the DC-UPS is more than twice the output current. This is caused by boosting the 12V battery voltage to a 24V level. This high current requires large wire gauges and short cable length for the longest possible buffer time. The higher the resistance of the connection between the battery and the DC-UPS, the lower the voltage on the battery terminals which increases the discharging current. See also section 25 for further installation instructions.

***) To ensure longest battery lifetime, the DC-UPS has a battery deep discharge protection feature included. The DC-UPS stops buffering when the voltage on the battery terminals of the DC-UPS falls below a certain value. The yellow LED will show “buffer time expired” for a period of 15 minutes after the unit stopped buffering.

Fig. 8-1 **Battery discharging current vs. output current, typ.**

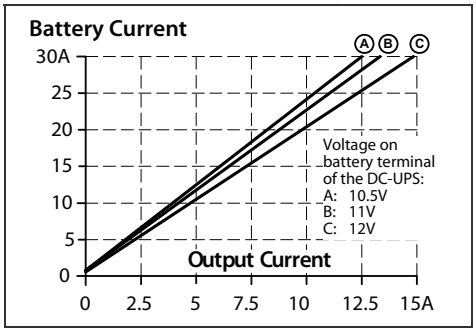

Fig. 8-2 **Required input current vs. input voltage for battery charging**

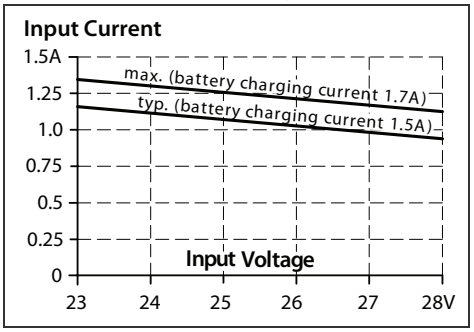

9. Buffer Time

The buffer time depends on the capacity and performance of the battery as well as the load current. The diagram below shows the typical buffer times of the standard battery modules.

Buffer time with battery module 1606-XLSBATASSY1	min.	19′12″	At 5A output current *)
	min.	5′42″	At 10A output current *)
	typ.	21′30″	At 5A output current, see Fig. 9-1 **)
	typ.	6′45″	At 10A output current, see Fig. 9-1 **)
Buffer time with battery module 1606-XLSBATASSY2	min.	99′30″	At 5A output current *)
	min.	39′	At 10A output current *)
	typ.	130′	At 5A output current, see Fig. 9-1 **)
	typ.	55′	At 10A output current, see Fig. 9-1 **)

*) Minimum value includes 20% aging of the battery and a cable length of 1.5m with a cross section of 2.5mm ^{2} between the battery and the DC-UPS and requires a fully charged (min. 24h) battery.

**) Typical value includes 10% aging of the battery and a cable length of 0.3m with a cross section of 2.5mm ^{2} between the battery and the DC-UPS and requires a fully charged (min. 24h) battery.

Fig. 9-1 **Buffer time vs. output current with the battery modules 1606-XLSBATASSY1 and 1606-XLSBATASSY2**

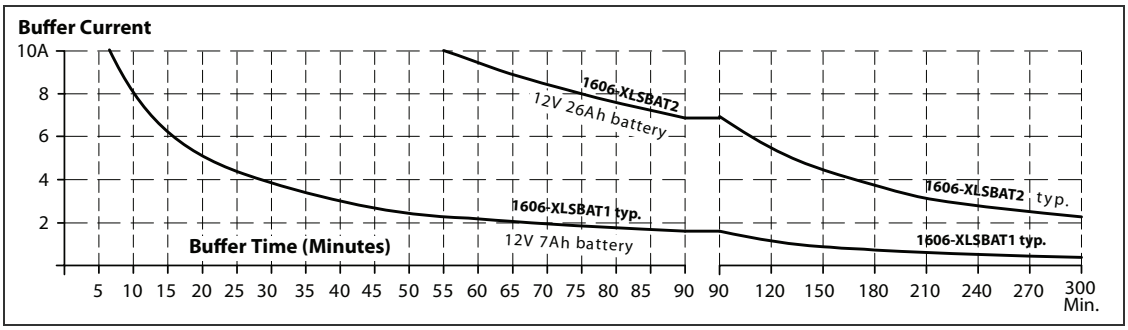

The battery capacity is usually specified in amp-hours (Ah) for a 20h discharging event. The battery discharge is non-linear (due to the battery chemistry). The higher the discharging current, the lower the appropriate battery capacity. The magnitude of the reduction depends on the discharging current as well as on the type of battery. High current battery types can have up to 50% longer buffer times compared to regular batteries when batteries are discharged in less than 1 hour.

High discharging currents do not necessarily mean high power losses as the appropriable battery capacity is reduced with such currents. When the battery begins to recharge after a discharging event, the process is completed much faster since only the energy which was taken out of the battery needs to be “replenished.”

For this reason, the buffer time cannot be calculated using the Ah capacity value. The equation “I x t = capacity” in Ah generally leads to incorrect results when the discharging current is higher than C20 (discharging current for 20h). Study the battery datasheet and determine the expected buffer time by using the example on the next page.

Example: How to determine the expected buffer time for other battery types and battery sizes

Step 1 Check the datasheet of the battery which is planned to be used and look for the discharging curve. Sometimes, the individual discharging curves are marked with relative C-factors instead of current values. This can easily be converted. The C-factor needs to be multiplied by the nominal battery capacity to get the current value. E.g.: 0.6C on a 17Ah battery means 10.2A.

Fig. 9-2 **Typical discharging curve of a typical 17Ah battery, curve taken from a manufacturer's datasheet**

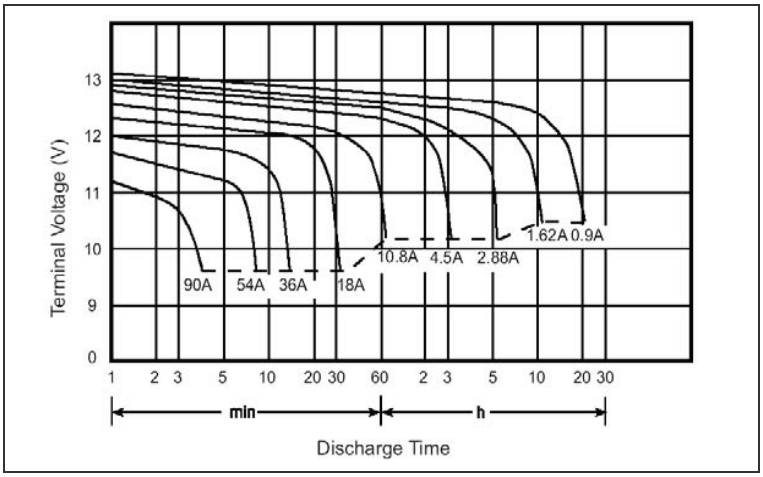

Step 2 Determine the required battery current. Use Fig. 8-1 "Battery discharging current vs. output current" to get the battery current. Fig. 8-1 requires the average voltage on the battery terminals. Since there is a voltage drop between the battery terminals and the battery input of the DC-UPS, it is recommended to use the curve A or B for output currents > 3A or when using long battery cables. In all other situations, use curve C.

Step 3 Use the determined current from Step 2 to find the appropriate curve in Fig. 9-2. The buffer time (Discharging Time) can be found where this curve meets the dotted line. This is the point where the DC-UPS stops buffering due to the under-voltage lockout.

Step 4 Depending on Fig. 9-2, the buffer time needs to be reduced to take aging effects or guaranteed values into account.

Example:

The buffer current: is 7.5A and a battery according to Fig. 9-2 is used. The cable linking the battery to the DC-UPS is 1m long and has a cross section of 2.5mm^2. What is the maximum achievable buffer time?

Answer:

- According to Fig. 8-1, the battery current is 18A. Curve A is used, since the battery current is > #A and the length of the cable is one meter.
- According to Fig. 9-2, a buffer time (Discharging Time) of 30 Minutes can be determined. It is recommended to reduce this figure to approximately 24 minutes for a guaranteed value and to cover the effects of aging.

10. Efficiency and Power Losses

Efficiency	typ.	97.8%	Normal mode, 10A output current, battery fully charged
Power losses	typ.	2.9W	Normal mode, 0A output current, battery fully charged
	typ.	5.5W	Normal mode, 10A output current, battery fully charged
	typ.	5.0W	During battery charging, 0A output current
	typ.	18.5W	Buffer mode, 10A output current

Fig. 10-1 **Efficiency at 24V, typ.**

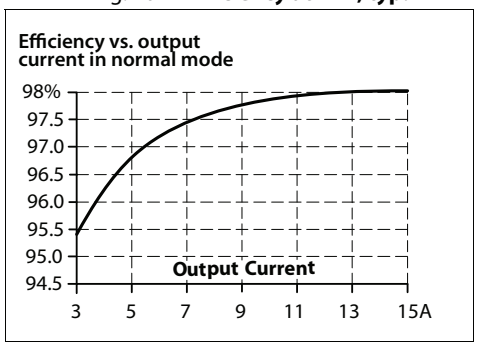

Fig. 10-2 **Losses at 24V, typ.**

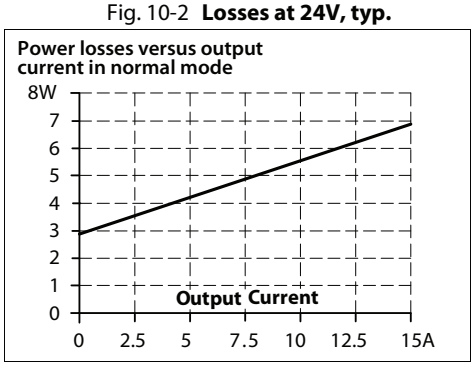

11. Functional Diagram

Fig. 11-1 **Functional diagram**

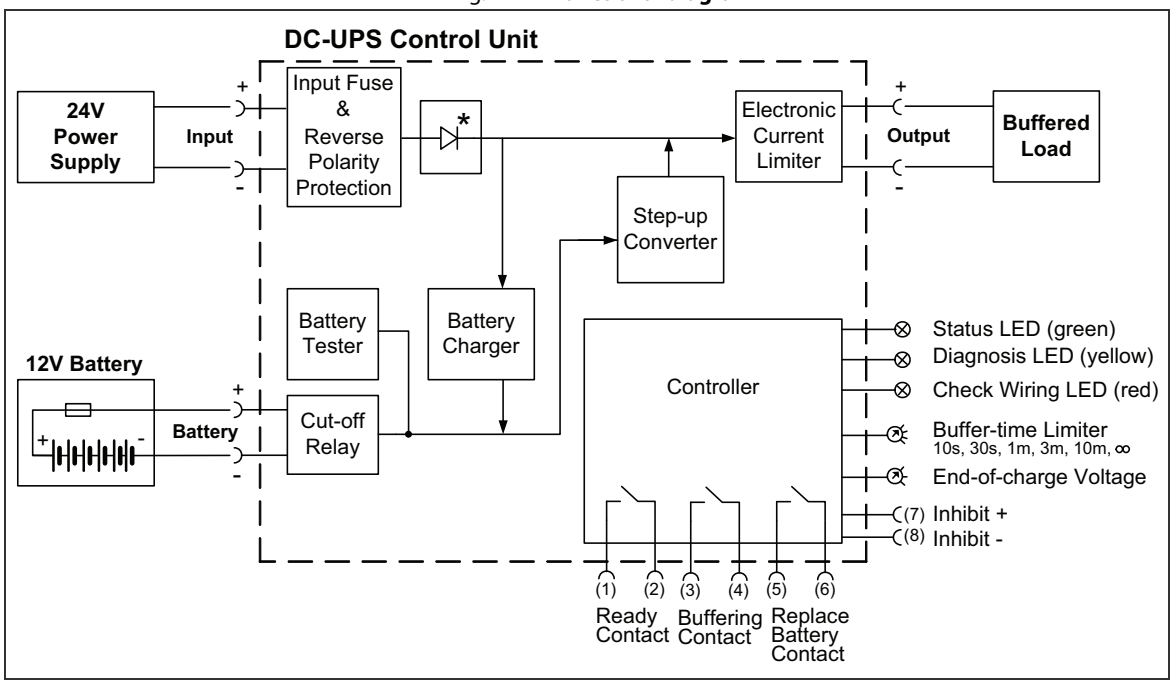

*) Return current protection: this feature uses a Mosfet instead of a diode in order to minimize the voltage drop and power losses.

All parameters are specified at 24V, 10A output load, 25°C ambient and after a 5 minutes run-in time unless noted otherwise.
It is assumed that the input power source can deliver a sufficient output current.

12. Check Wiring and Battery Quality Tests

The DC-UPS is equipped with an automatic “Check Wiring” and “Battery Quality” test.

“Check Wiring” test:
Under normal circumstances, an incorrect or bad connection from the battery to the DC-UPS or a missing (or blown) battery fuse would not be recognized by the UPS when operating in normal mode. Only when backup is required would the unit be unable to buffer. Therefore, a “Check Wiring” test is included in the DC-UPS. This connection is tested every 10 seconds by loading the battery and analyzing the response from the battery. If the resistance is too high, or the battery voltage is not in range, the unit displays “Check Wiring” along with the red LED. At the same time, the green “Ready” LED will turn off.

“State of Health” (SoH) test:
The battery has a limited service life and needs to be replaced at fixed intervals determined by the specified service life (acc. to the Eurobat guideline), based on the surrounding temperature and the number of charging and discharging cycles. If the battery is used longer than the specified service life, its capacity will degrade. Section 26-1 contains additional information on the topic. The battery quality test cannot identify a gradual loss in capacity.
However, it is able to detect a battery failure within the specified service life of the battery.
Therefore a battery quality test in included in the DC-UPS.

The battery quality test consists of different types of tests:

During Charging: If the battery does not reach the ready status (see section 14) within 30h, it is considered to be defective. The culprit could be a broken cell inside the battery.
During Operation: Once the battery is fully charged, a voltage drop and a load test are performed alternately, every 8 hours. Three consecutive tests must produce negative results to indicate a battery problem.

A battery problem is indicated by the yellow LED (replace battery pattern) and the relay contact “Replace Battery.” Please note that it can take up to 170 hours (with the largest battery size) until a battery problem is reported. This should avoid nuisance error messages as any urgent battery problems will be reported by the “Check Wiring” test and create a warning signal.

When “Replace Battery” is indicated, we recommend replacing the battery as soon as possible.

13. Relay Contacts and Inhibit Input

The DC-UPS is equipped with relay contacts and signal inputs for remote monitoring and control of the input.

Relay contacts:

Ready:	Contact is closed when battery is charged more than 85%, no wiring failure is recognized, input voltage is sufficient and inhibit signal is inactive.
Buffering:	Contact is closed when unit is buffering.
Replace Battery:	Contact is closed when the unit is powered from the input and the battery quality test (SoH test) reports a negative result.

Relay contact ratings	max	60Vdc 0.3A, 30Vdc 1A, 30Vac 0.5A resistive load
	min	1mA at 5Vdc min.
Isolation voltage	max	500Vac, signal port to power port

Signal input:

Inhibit: The inhibit input disables buffering. In normal mode, a static signal is required. In buffer mode, a pulse with a minimum length of 250ms is required to stop buffering. The inhibit is stored and can be reset by cycling the input voltage. See also section 26.1 for application hints.

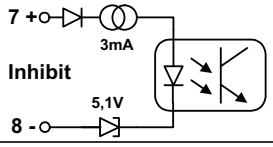

Signal voltage	max.	35Vdc
Signal current	max.	6mA, current limited
Inhibit threshold	min.	6Vdc, buffering is disabled above this threshold level.
	max.	10Vdc
Isolation	nom.	500Vac, signal port to power port

Restrictions apply when using the signal and relay contacts in a Haz-Loc environment:

The Buffering, Ready and Replace Battery contact is intended to be used for a separately investigated nonincendive field wiring and/or field wiring apparatus. The DC-UPS may be located in a Class I, Division 2 (Group A, B, C or D) hazardous (classified) location. Associated apparatus must be installed in accordance with its manufacturer's control drawing and Article 504 of the National Electrical Code (ANSI/NFPA 70) for installation in the United States, or Section 18 of the Canadian Electrical Code for Installations in Canada.
Selected associated apparatus must be third part listed as providing nonincendive field circuits for the application, and have Voc not exceeding Vmax, Isc not exceeding Imax.

Non associated nonincendive field wiring apparatuses shall not be connected in parallel unless this is permitted by the associated nonincendive field wiring apparatuses approval.

Fig. 13-1 **Contact control drawing for use in Haz-Loc environments**

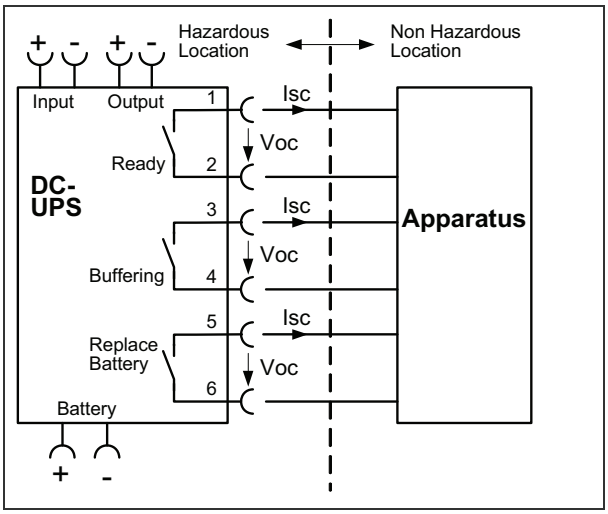

Selected barriers must have entity parameters such that Voc ≤ V max, Isc ≤ Imax,
Ca ≥ Ci + Ccable, La ≥ Li + Lcable.
For Ccable and Lcable, if the capacitance per foot or the inductance per foot is not known, then the following values shall be used: Ccable = 60pF/foot and Lcable = 0.2µH/foot.

Contact current: I max = 50mA
Contact voltage: V max. = 35V (DC or AC)
Max. associated circuit capacitance Ci = 0
Max. associated circuit inductance Li = 0
No polarity requirement

14. Front Side User Elements

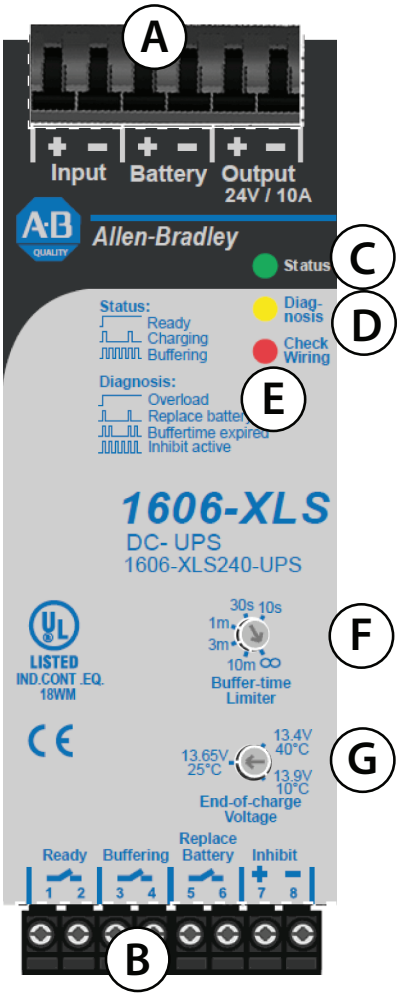

A Power Port
Quick-connect spring-clamp terminals, connection for input voltage, output voltage and battery

B Signal Port
Plug connector with screw terminals, inserted from the bottom. Connections for the Ready, Buffering, Replace Battery relay contacts and for the Inhibit input. See details in section 13. .

C Green Status LED
Ready: Battery is charged > 85%, no wiring failure is recognized, input voltage is sufficient and in hibit signal is not active.
Charging: Battery is charging and the battery capacity is below 85%.
Buffering: Unit is in buffer mode.
Flashing pattern of the green status LED:

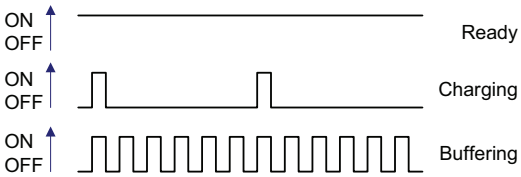

D Yellow Diagnosis LED
Overload: Output has switched off due to long overload in buffer mode or due to high temperatures.
Replace battery: Indicates a battery which failed the battery quality test (SoH test). Battery should be replaced soon.
Buffer-time expired: Output has switched off due to settings of Buffer-timer Limiter. This signal will be displayed for 15 minutes.
Inhibit active: Indicates that buffering is disabled due to an active inhibit signal.
Flashing pattern of the yellow diagnosis LED:

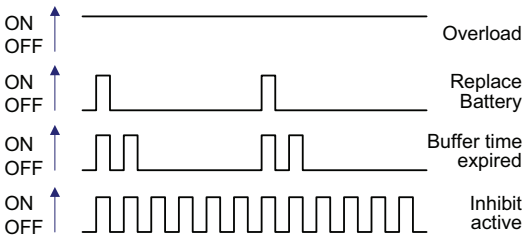

E Red Check Wiring LED
This LED indicates a failure in th e installation (e.g. too low input voltag e), wiring, battery or battery fuse.

F Buffer-time Limiter:
User accessible dial which limits the maximum buffer time in a buffer event to save battery energy. When the battery begins to recharge after a discharging event, the process is completed musch faster since only the energy which was taken out of the battery needs to be "refilled". The following times can be selected: 10 seconds, 30 seconds, 1 minute, 3 minutes, 10 minutes or infinity (until battery is flat) which allows buffering until the deep discharge protection stops buffering.

G End-of-charge Voltage Selector:
The end-of-charge voltage shall be set manually according to the expected temperature in which the battery is located. The dial on the front of the unit allows a continuous adjustment between +10 and +40°C. 10°C will set the end-of-charge-voltage to 13.9V, 25°C →13.65V and 40°C→13.4V. If in doubt about the expected temperature, set the unit to 35°C.

15. Terminals and Wiring

	Power terminals	Signal terminals
Type	Bi-stable, quick-connect spring-clamp terminals. IP20 Finger-touch-proof. Suitable for field- and factory installation. Shipped in open position.	Plug connector with screw terminal. Finger-touch-proof construction with captive screws for 3.5mm slotted screwdriver. Suitable for field and factory installation. Shipped in open position. To meet GL requirements, unused terminal compartments should be closed.
Solid wire	0.5-6mm²	0.2-1.5mm²
Stranded wire	0.5-4mm²	0.2-1.5mm²
AWG	20-10AWG	22-14AWG
Ferrules	Allowed, but not required	Allowed, but not required
Pull-out force	10AWG:80N, 12AWG:60N, 14AWG:50N, 16AWG:40N according to UL486E	Not applicable
Tightening torque	Not applicable	0.4Nm, 3.5lb.in
Wire stripping length	10mm / 0.4inch	6mm / 0.24inch

Fig. 15-1 Spring-clamp terminals, connecting a wire

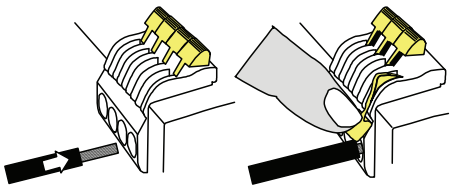

1. Insert the wire 2. Close the lever

To disconnect wire:
reverse the procedure

Instructions:

a) Use appropriate copper cables, that are designed for an operating temperature of 60°C

b) Follow national installation codes and regulations.

c) Ensure that all strands of a stranded wire are fully inserted in the terminal connection.

d) Up to two stranded wires with the same cross-section are permitted in one connection point.

16. Reliability

Lifetime expectancy	min.	137 400h	At 10A output current, 40°C
	min.	> 15 years	At 5A output current, 40°C
	min.	> 15 years	At 10A output current, 25°C
MTBF SN 29500, IEC 61709		886 000h	At 10A output current, 40°C
		1 482 000h	At 10A output current, 25°C
MTBF MIL HDBK 217F		397 900	At 10A output current , 40°C, ground benign GB40
		545 000	At 10A output current , 25°C, ground benign GB25

The **Lifetime expectancy** shown in the table indicates the operating hours (service life) and is determined by the lifetime expectancy of the built-in electrolytic capacitors. Lifetime expectancy is specified in operational hours. Lifetime expectancy is calculated according to the capacitor's manufacturer specification. The prediction model allows a calculation of up to 15 years from date of shipment.

MTBF stands for **Mean Time Between Failures**, which is calculated according to statistical device failures and indicates reliability of a device. It is the statistical representation of the likelihood of failure of a given unit and does not necessarily represent the life of a product.

17. EMC

The unit is suitable for applications in industrial environments as well as in residential, commercial amnd light industry environments without any restrictions. The CE Mark is in conformance with EMC guidelines 89/336/EEC and 93/68/EEC and the low-voltage directive (LVD) 73/23/EEC, 93/68/EEC.

A detailed EMC report is available on request.

EMC Immunity	EN 61000-6-1, EN 61000-6-2		Generic standards	
Electrostatic discharge	EN 61000-4-2	Contact discharge Air discharge	8kV 15kV	Criterion A*) Criterion A *)
Electromagnetic RF field	EN 61000-4-3	80MHz-1GHz	10V/m	Criterion A
Fast transients (Burst)	EN 61000-4-4	Out- and input lines Signal lines **)	2kV 2kV	Criterion A Criterion A
Surge voltage	EN 61000-4-5	Output + → - Input + → - + / - → housing	500V 500V 500V	Criterion A Criterion A Criterion A
Conducted disturbance	EN 61000-4-6	0,15-80MHz	10V	Criterion A

*) Grounded to the DIN rail
**) Tested with coupling clamp

EMC Emission	EN 61000-6-3, EN 61000-6-4		Generic standards
Conducted emission	EN 55022 EN 55022	Input lines Output lines	Class B *) Class B *)
Radiated emission	EN 55011, EN 55022		Class B

This device complies with FCC Part 15 rules.
Operation is subjected to the following two conditions: (1) this device may not cause harmful interference, and 2) this device must accept any interference received, including interference that may cause undesired operation.

*) Informative measurement with voltage probe

Switching frequencies	The DC-UPS has three converters with three different switching frequencies included.	
Switching frequency of boost converter	100kHz	Constant frequency
Switching frequency of electronic output cu rrent limitation	78kHz	Constant frequency
Switching frequency of battery charger	19.5kHz	Constant frequency

All parameters are specified at 24V, 10A output load, 25°C ambient and after a 5 minutes run-in time unless noted otherwise.
It is assumed that the input power source can deliver a sufficient output current.

18. Environment

Operational temperature	-25°C to +70°C (-13° to +158°F)	For the DC-UPS control unit. Keep battery in a cooler environment!
Derating	0.43A/°C	+60°C to +70°C (+140°F to +158°F), normal mode see Fig. 18-1
	0.25A/°C	+60°C to +70°C (+140°F to +158°F), buffer mode see Fig. 18-2
Storage temperature	-40 to +85°C (-40° to +185°F)	Storage and transportation, except battery
Humidity	5 to 95% r.H.	IEC 60068-2-30 Do not energize while condensation is present
Vibration sinusoidal	2-17.8Hz: ±1.6mm; 17.8-500Hz: 2g	IEC 60068-2-6
Shock	30g 6ms, 20g 11ms	IEC 60068-2-27
Altitude	0 to 6000m	Approvals apply only up to 2000m
Over-voltage category	III	EN 50178
	II	EN 50178 above 2000m altitude
Degree of pollution	2	EN 50178, not conductive

Fig. 18-1 **Output current vs. ambient temperature**

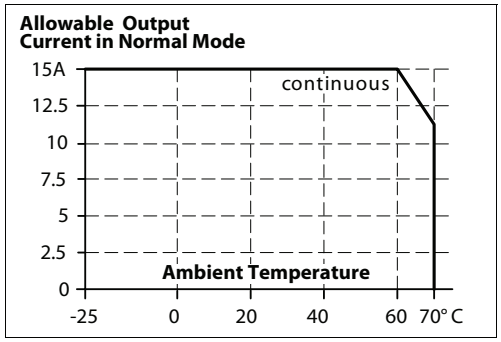

The ambient temperature is defined 2cm below the unit.

Fig. 18-2 **Output current vs. ambient temperature**

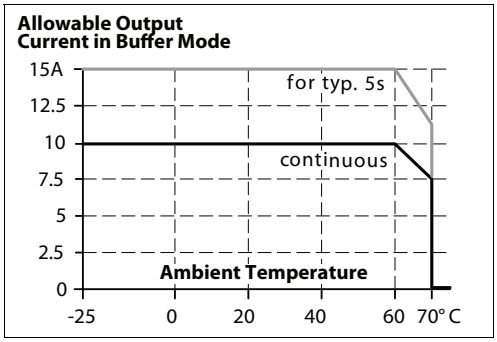

19. Protection Features

Output protection	Electronically protected against overload, no-load and short-circuits	
Output over-voltage protection in buffer mode	typ. 32Vdc max. 35Vdc	In case of internal defect, a redundant circuitry limits the maximum output voltage. The output automatically shuts-down and makes restart attempts.
Degree of protection	IP20	EN/IEC 60529
Penetration protection	> 3.5mm	E.g. screws, small parts
Reverse battery polarity protection	yes	Max. –35Vdc;
Wrong battery voltage protection	yes	Max. +35Vdc (e.g. 24V battery instead of 12V battery)
Battery deep discharge protection	yes	The limit is battery current dependent
Over temperature protection	yes	Output shut-down with automatic restart
Input over-voltage protection	yes	Max. 35Vdc, no harm or defect of the unit
Internal input fuse	25A, blade type	No user accessible part, no service part

20. Safety

Output voltage	SELV	IEC/EN 60950-1
	PELV	EN 60204-1, EN 50178, IEC 60364-4-41
	Max. allowed voltage between any input, output or signal pin and ground: 60Vdc or 42.4Vac	
Class of protection	III	PE (Protective Earth) connection is not required
Isolation resistance	> 5MOhm	Power port to housing, 500Vdc
Dielectric strength	500Vac	Power port to signal port
	500Vac	Power port / signal port to housing
Touch current (leakage current)	The leakage current which is produced by the DC-UPS itself depends on the input voltage ripple and needs to be investigated in the final application. For a smooth DC input voltage, the produced leakage current is less than 100 µA.	

21. Certifications

UL 508	18WM c UL US LISTED IND. CONT. EQ.	LISTED EE56639 for use in the U.S.A. (UL 508) and Canada (C22.2 No. 14-95). Industial Control Equipment.
UL 60950	US	RECOGNIZED E168663 for use in the U.S.A. (UL 60950-1) and Canada (C22.2 No. 60950) Information Technology Equipment, Level 3
EN 60950-1, EN 61204-3	CE	Complies with CE EMC and CE Low Voltage Directives.
ISA 12.12.01, CSA C22.2 No. 213	c US	RECOGNIZED UNDER FILE NUMBER E244404 for use in the U.S.A. (ISA 12.12.01) and Canada (C22.2 No. 213) Hazardous Location Class I Div. 2, Groups A, B, C, D
Marine GL	GL	GL (Germanischer Lloyd) classified for marine and offshore applications. Environmental category: C, EMC2. See below for link to the Certificate.
CSA C22.2 No. 107.1, 60950-1	C US	CSA Certified under File Number 240020
Marine RINA		RINA (Registro Italiano Navale) certified. See below for the link to the Certificate.
GOST R		GOST R certification is applicable for products intended for sale and use within Russia. See below for the link to the Certificate.
C-TICK		C-Tick compliance is for products intended for sale and use withinh the Australian market. See below for the link to the C-Tick Declarations of Conformity.

Product certification information (including Certificates and Declarations of Conformity) can be found at www.ab.com/certifications.

All parameters are specified at 24V, 10A output load, 25°C ambient and after a 5 minutes run-in time unless noted otherwise.
It is assumed that the input power source can deliver a sufficient output current.

22. Environmental Compliance

The unit does not release any silicone and is suitable for the use in paint shops.

The unit conforms to the RoHS directive 2002/96/EC.

Electrolytic capacitors included in this unit do not use electrolytes such as Quaternary Ammonium Salt Systems.

Plastic housings and other molded plastic materials are free of halogens; wires and cables are not PVC insulated.

The materials used in our production process do not include the following toxic chemicals:
Polychlorinated Biphenyl (PCB), Pentachlorophenol (PCP), Polychlorinated naphthalene (PCN), Polybrominated Biphenyl (PBB), Polybrominated Biphenyl Oxide (PBO), Polybrominated Diphenyl Ether (PBDE), Polychlorinated Diphenyl Ether (PCDE), Polybrominated Diphenyl Oxid e (PBDO), Cadmium, Asbestos, Mercury, Silica

23. Physical Dimensions and Weight

Width	49mm / 1.93″	
Height	124mm / 4.88″	Plus height of signal connector plug
Depth	117mm / 4.61″	Plus depth of DIN rail
Weight	530g / 1.17lb	
DIN Rail	Use 35mm DIN rails according to EN 60715 or EN 50022 with a height of 7.5 or 15mm. The DIN rail height must be added to the depth (117mm) to calculate the total required installation depth.	

Electronic files with mechanical data can be downloaded from the Rockwell Automation website.

Fig. 23-1 **Side view**

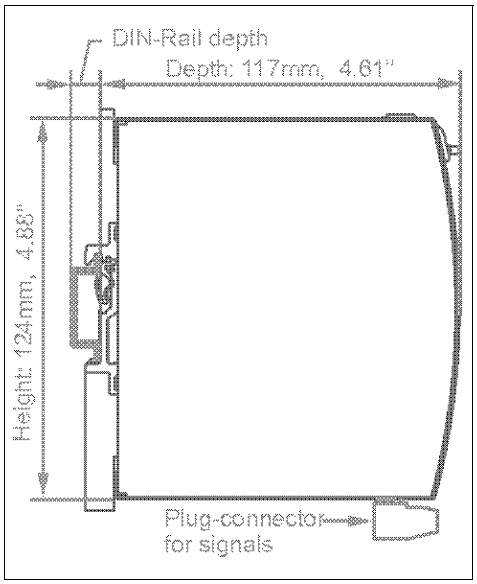

Fig. 23-2 **Front view**

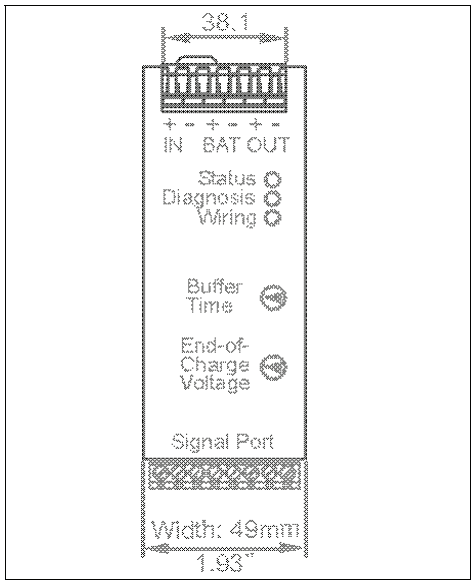

24. Installation Notes

Mounting:
The power terminal shall be located on top of the unit. An appropriate electrical and fire end-product enclosure should be considered in the end use application.

Cooling: Convection cooled, no forced air cooling required. Do not obstruct air flow!

Installation clearances: 40mm on top, 20mm on the bottom, 5mm on the left and right side are recommended when loaded permanently with full power. In case the adjacent device is a heat source, 15mm clearance are recommended.

Risk of electrical shock, fire, personal injury or death!
Turn power off and disconnect battery fuse before working on the DC-UPS. Protect against inadvertent re-powering.
Make sure the wiring is correct by following all local and national codes. Do not open, modify or repair the unit.
Use caution to prevent any foreign objects from entering the housing.
Do not use in wet locations or in areas where moisture and/or condensation are likely to be present.

Service parts:
The unit does not contain any service part. The tripping of an internal fuse is caused by an internal fault. Should damage or malfunction occur during operation, turn power off immediately and return unit to the factory for inspection!

Wiring and installation instructions:

(1) Connect the power supply to the input terminals of the DC-UPS.

(2) Connect the battery to the battery terminals of the DC-UPS. It is recommended to install the battery outside the cabinet or in a place where the battery will not be heated up by adjacent equipment. Do not install the battery in airtight housings or cabinets. The battery should be installed according to EN50272-2, which includes sufficient ventilation. Batteries store energy and need to be protected against energy hazards. Use a 30A battery fuse type ATO® 257 030 (Littelfuse) or similar in the battery path. The battery fuse protects the wires between the battery and the DC-UPS. It also allows the disconnection of the battery from the DC-UPS which is recommended when working on the battery or DC-UPS. Disconnect battery fuse before connecting the battery.
Please note: Excessively short or long wires between the DC-UPS and the battery can shorten the buffer time or result in malfunction of the DC-UPS. Do not use wires smaller than 2.5mm^2 (or 12AWG) and no longer than 2x1.5m (cord length 1.5m). Avoid voltage drops on this connection.

(3) Connect the buffered load to the output terminals of the DC-UPS. The output is decoupled from the input, allowing load circuits to be easily split into buffered and non-buffered sections. Non-critical loads can be connected directly to the power supply and will not be buffered. The energy of the battery can then be used in the circuits that require buffering.

(4) Install the battery fuse upon completion of the wiring.

Fig. 24-1 **Typical wiring diagram**

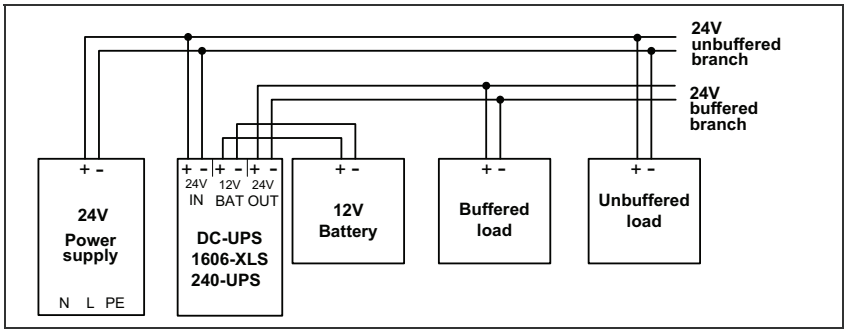

25. Accessories

Battery Modules

Two pre-assembled battery modules with a single 12V battery are available for different buffer times. As an option, the mounting brackets are also available without batteries. This option offers more flexibility in selecting an appropriate battery and can result in savings in shipping and logistics. See individual datasheets for each model.

	1606-XLSBATASSY1	**1606-XLSBATASSY2**	
Battery type	Standard version 12V, 7Ah	High current version 12V, 26Ah	VRLA lead-acid maintenance free battery
Service life	3 to 5 years	10 to 12years	According to EUROBAT guideline
Dimensions	155x124x112mm	214x179x158mm	Width x height x depth
Weight	3.2kg	9.9kg	
DIN rail mountable	yes	no	
Order number	1606-XLSBATASSY1	1606-XLSBATASSY2	Battery module
	1606-XLSBATBR1	1606-XLSBATBR2	Mounting bracket without battery
	1606-XLSBAT1	1606-XLSBAT2	Replacement battery only

Fig. 25-1 **1606-XLSBATASSY1**

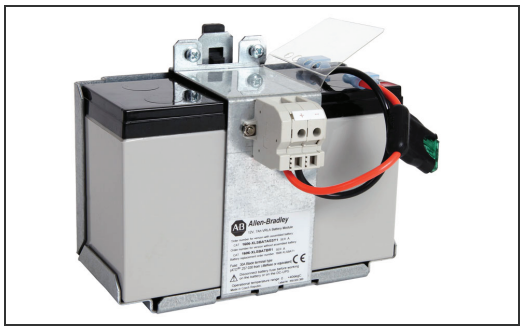

Fig. 25-2 **1606-XLSBATASSY2**

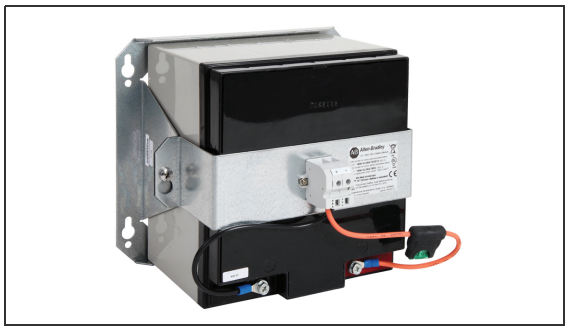

1606-XLB Wall / Panel mounting bracket

This bracket is used to mount the DC-UPS units onto a flat surface without a DIN rail. The two aluminium brackets and the black plastic slider of the DC-UPS have to be removed before you can mount the two surface brackets.

Fig. 25-3 **1606-XLB Wall / Panel Mounting Bracket**

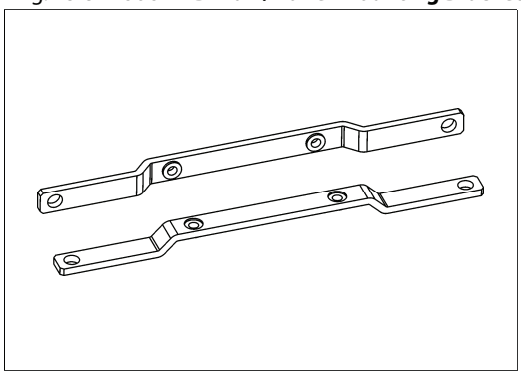

Fig. 25-4 **Assembled Wall / Panel Mounting Bracket**

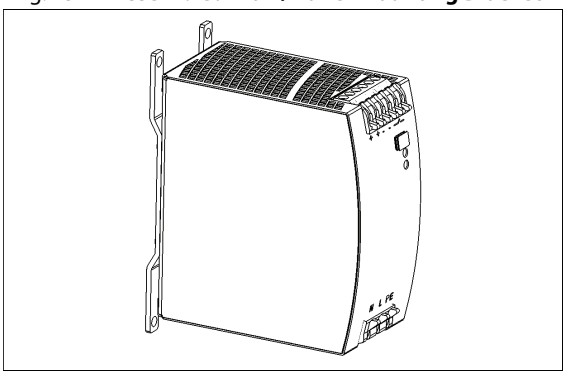

26. Application Notes

26.1. Battery Replacement Intervals

Batteries have a limited life time. They degrade slowly beginning from the production and need to be replaced periodically. The design life figures can be found in the individual datasheets of the batteries and are usually specified specified according to the Eurobat guideline or according to specifications from the manufacturer.

The design life is the estimated life based on laboratory condition, and is quoted at 20°C using the manufacturer's recommended float voltage condition. Acco rding to the Eurobat guideline, design lives have been structured into the following different groups:

3 - 5 years: This group of batteries is very popular in standby applications and in small emergency equipment. This represents a 4 years design life with a production tolerance of ±1 year.

6 - 9 years: This group of batteries is usually us ed when an improved life is required. This represents a 7.5 years design life with a production tolerance of ±1.5 years.

10 - 12 years: This group of batteries is used when in applications that require longest life and highest safety levels. This represents a 11 years design life with a production tolerance of ± one year.

A battery failure within the specified design life of the battery usually results in a complete loss of the battery function (broken cell, faulty connection, …) and will be detected and reported by the periodical battery tests included in the 1606-XLS240-UPS DC-UPS control unit.

If the operational parameters differ from those which are specified for the design life, earlier replacement of the battery might be necessary. The "real life" is also called service life and is defined as the point at which the cell's actual capacity has reached 80% of its nominal capacity. At the end of the service life, capacity degrades much faster; further use of the battery is therefore not recommended.

Temperature effect:

The temperature has the most impact in the service life. The hotter the temperature, the sooner the wear-out phase of the battery begins. The wear-out results in a degradation of battery capacity. See Fig. 26-1 for details.

Effect of discharging cycles

The number as well as the depth of discharging cycles is limited. A replacement of the battery might be necessary earlier than the calculated service life if the battery exceeds the numbers and values of Fig. 26-2.

Other effects which shortens the service life

- Overcharging and deep discharging shorten the service life and should be avoided. Thanks to the single battery concept of the 1606-XLS240-UPS, the end-of-charge voltage can be set very precisely to the required value, thereby avoiding unnecessary aging effects.
- Charge retention is important to ensure the longest battery life. Stored batteries that are not fully charged age faster then charged batteries. Batteries which are not in use should be recharged at least once a year.
- Excessive float charge ripple across the battery has the effect of reducing life and performance. The 1606-XLS240-UPS does not produce such a ripple voltage. This effect can be ignored when the battery is charged via the 1606-XLS240-UPS.

Guidelines for a long battery service life

- Place the battery in a cool location: E.g. near the bottom of the control cabinet.
- Do not place the battery near heat generating devices.
- Do not store discharged batteries.
- Do not discharge the battery more than necessary. Set buffer time limiter to the required buffer time.
- When choosing the battery capacity, always try to get the next higher capacity than required. The depth of discharge reduces the service life of the battery and limits the number of cycles. See Fig. 26-2.

Example for calculating the service life and the required replacement cycle:

Parameters for the example:

- A 7Ah battery with a design life of 3-5 years is used (e.g. Yuasa battery from the 1606-XLSBATASSY1 module)
- The average ambient temperature is 30°C
- One buffer event consumes approx. 25% of the achievable buffer time.
- One buffer event per day

Calculation:

Ambient temperature influence:
According to Fig. 26-1 curve A, a 2-year service life can be expected at an ambient temperature of 30°C.

Number of discharging cycles: 2 years * 365 cycles = 730cycles in 2 years.
According to Fig. 26-2, curve C has to be used (only 25% of battery capacity is required). 730 cycles have only a negligible influence in a battery degradation and can be ignored.

Result:
The battery shall be replaced after 2 years.
Please note that the battery degrading begins from the production date (check date code on the battery) which may shorten the replacement intervals.

Fig. 26-1 **Service life versus ambient temperatures, typ *)**

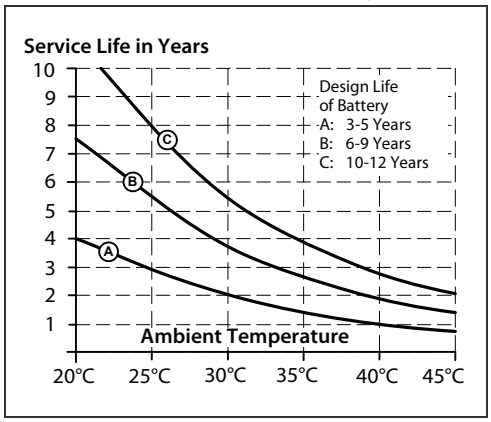

Fig. 26-2 **Cell capacity degradation vs. discharging cycles *)**

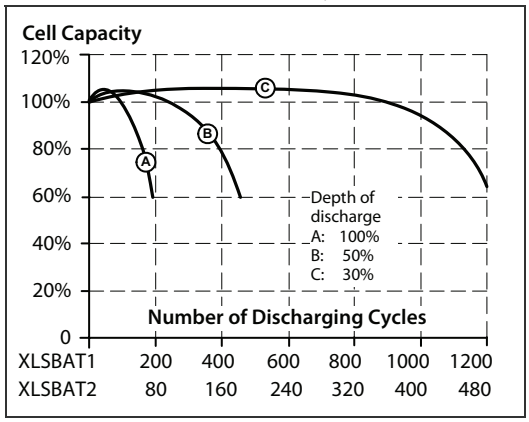

*) datasheet figures from battery manufacturer

26.2. Parallel and Serial Use

Do not use the DC-UPS in parallel to increase the output power. However, two units of the DC-UPS can be paralleled for 1+1 redundancy to gain a higher system reliability.

Do not use batteries in parallel, since the battery quality test may generate an error message.

Do not connect two or more units in series for higher output voltages.

Do not connect two or more units in a row to get longer hold-up times.

26.3. Using the Inhibit Input

The inhibit input disables buffering. In normal mode, a static signal is required. In buffer mode, a pulse with a minimum length of 250ms is required to stop buffering. The inhibit is stored and can be reset by cycling the input voltage.

For service purposes, the inhibit input can also be used to connect a service switch. Therefore, the inhibit signal can be supplied from the output of the DC-UPS.

Fig. 26-3 **Wiring example for inhibit input**

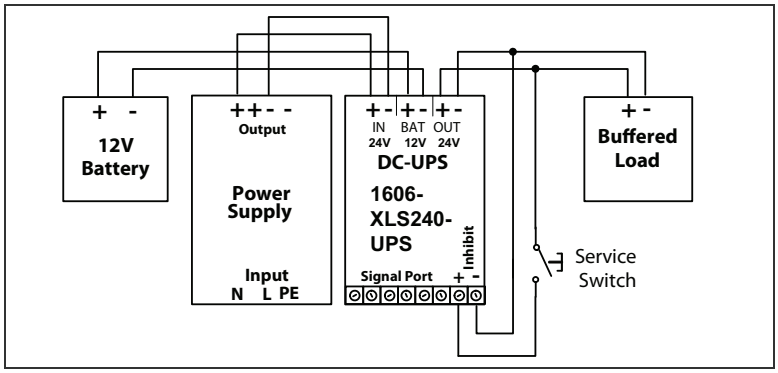

26.4. Troubleshooting

The LEDs on the front of the unit and relay contacts indicate about the actual or elapsed status of the DC-UPS. Please also see section 14.

The following guidelines provide instructions for fixing the most common failures and problems. Always start with the most likely and easiest-to-check condition. Some of the suggestions may require special safety precautions. See notes in section 25 first.

"Check wiring" LED is on
Check correct wiring between the battery and the DC-UPS.
Check battery fuse. Is the battery fuse inserted or blown?
Check battery voltage (must be typically between 7.4V and 15.1V).
Check input voltage (must be typically between 22.8V and 30V).
Check battery polarity.

DC-UPS did not buffer
Inhibit input was set
Battery did not have enough time to charge and is still below the deep discharge protection limit.

DC-UPS stopped buffering
Buffer time limiter stopped buffering → set buffer time limiter to a higher value.
Deep discharge protection stopped buffering → use a larger battery, or allow sufficient time for charging the battery.
Output was overloaded or short circuit → reduce load.

Output has shut down
Cycle the input power to reset the DC-UPS.
Let DC-UPS cool down, over temperature protection might have triggered.

DC-UPS constantly switches between normal mode and buffer mode
The supplying source on the input is too small and cannot deliver sufficient current.
→ Use a larger power supply or reduce the output load.

Rockwell Automation Support

Rockwell Automation provides technical information on the Web to assist you in using its products. At http://www.rockwellautomation.com/support, you can find technical manuals, technical and application notes, sample code and links to software service packs, and a MySupport feature that you can customize to make the best use of these tools. You can also visit our Knowledgebase at http://www.rockwellautomation.com/knowledgebase for FAQs, technical information, support chat and forums, software updates, and to sign up for product notification updates.

For an additional level of technical phone support for installation, configuration, and troubleshooting, we offer TechConnect℠ support programs. For more information, contact your local distributor or Rockwell Automation representative, or visit http://www.rockwellautomation.com/support/.

Installation Assistance

If you experience a problem within the first 24 hours of installation, review the information that is contained in this manual. You can contact Customer Support for initial help in getting your product up and running.

United States or Canada	1.440.646.3434
Outside United States or Canada	Use the Worldwide Locator at http://www.rockwellautomation.com/rockwellautomation/support/overview.page, or contact your local Rockwell Automation representative.

New Product Satisfaction Return

Rockwell Automation tests all of its products to help ensure that they are fully operational when shipped from the manufacturing facility. However, if your product is not functioning and needs to be returned, follow these procedures.

United States	Contact your distributor. You must provide a Customer Support case number (call the phone number above to obtain one) to your distributor to complete the return process.
Outside United States	Please contact your local Rockwell Automation representative for the return procedure.

Documentation Feedback

Your comments will help us serve your documentation needs better. If you have any suggestions on how to improve this document, complete this form, publication RA-DU002, available at http://literature.rockwellautomation.com/idc/groups/literature/documents/du/ra-du002_-en-e.pdf.

www.rockwellautomation.com

Power, Control and Information Solutions Headquarters

Americas: Rockwell Automation, 1201 South Second Street, Milwaukee, WI 53204-2496 USA, Tel: (1) 414.382.2000, Fax: (1) 414.382.4444
Europe/Middle East/Africa: Rockwell Automation NV, Pegasus Park, De Kleetlaan 12a, 1831 Diegem, Belgium, Tel: (32) 2 663 0600, Fax: (32) 2 663 0640
Asia Pacific: Rockwell Automation, Level 14, Core F, Cyberport 3, 100 Cyberport Road, Hong Kong, Tel: (852) 2887 4788, Fax: (852) 2508 1846

Publication 1606-RM036A-EN-P — April 2014