SequenceManager™

1756 ControlLogix, 1756 GuardLogix, 1769 CompactLogix, 1769 Compact GuardLogix, 1789 SoftLogix, Studio 5000 Logix Emulate

Rockwell Automation

Quick Start Guide

Original Instructions

Important User Information

Read this document and the documents listed in the additional resources section about installation, configuration, and operation of this equipment before you install, configure, operate, or maintain this product. Users are required to familiarize themselves with installation and wiring instructions in addition to requirements of all applicable codes, laws, and standards.

Activities including installation, adjustments, putting into service, use, assembly, disassembly, and maintenance are required to be carried out by suitably trained personnel in accordance with applicable code of practice.

If this equipment is used in a manner not specified by the manufacturer, the protection provided by the equipment may be impaired.

In no event will Rockwell Automation, Inc. be responsible or liable for indirect or consequential damages resulting from the use or application of this equipment.

The examples and diagrams in this manual are included solely for illustrative purposes. Because of the many variables and requirements associated with any particular installation, Rockwell Automation, Inc. cannot assume responsibility or liability for actual use based on the examples and diagrams.

No patent liability is assumed by Rockwell Automation, Inc. with respect to use of information, circuits, equipment, or software described in this manual.

Reproduction of the contents of this manual, in whole or in part, without written permission of Rockwell Automation, Inc., is prohibited.

Throughout this manual, when necessary, we use notes to make you aware of safety considerations.

WARNING: Identifies information about practices or circumstances that can cause an explosion in a hazardous environment, which may lead to personal injury or death, property damage, or economic loss.

ATTENTION: Identifies information about practices or circumstances that can lead to personal injury or death, property damage, or economic loss. Attentions help you identify a hazard, avoid a hazard, and recognize the consequence.

IMPORTANT Identifies information that is critical for successful application and understanding of the product.

Labels may also be on or inside the equipment to provide specific precautions.

SHOCK HAZARD: Labels may be on or inside the equipment, for example, a drive or motor, to alert people that dangerous voltage may be present.

BURN HAZARD: Labels may be on or inside the equipment, for example, a drive or motor, to alert people that surfaces may reach dangerous temperatures.

ARC FLASH HAZARD: Labels may be on or inside the equipment, for example, a motor control center, to alert people to potential Arc Flash. Arc Flash will cause severe injury or death. Wear proper Personal Protective Equipment (PPE). Follow ALL Regulatory requirements for safe work practices and for Personal Protective Equipment (PPE).

Studio 5000 environment

The Studio 5000 Automation Engineering & Design Environment® combines engineering and design elements into a common environment. The first element is the Studio 5000 Logix Designer® application. The Logix Designer application is the rebranding of RSLogix 5000® software and will continue to be the product to program Logix 5000™ controllers for discrete, process, batch, motion, safety, and drive-based solutions.

The Studio 5000® environment is the foundation for the future of Rockwell Automation® engineering design tools and capabilities. The Studio 5000 environment is the one place for design engineers to develop all elements of their control system.

Additional resources

These documents contain additional information concerning related Rockwell Automation products.

Resource	Description
Industrial Automation Wiring and Grounding Guidelines, publication 1770-4.1	Provides general guidelines for installing a Rockwell Automation industrial system.
Product Certifications webpage, available at http://ab.rockwellautomation.com	Provides declarations of conformity, certificates, and other certification details.

View or download publications at http://www.rockwellautomation.com/literature. To order paper copies of technical documentation, contact the local Rockwell Automation distributor or sales representative.

Legal Notices

Rockwell Automation publishes legal notices, such as privacy policies, license agreements, trademark disclosures, and other terms and conditions on the Legal Notices page of the Rockwell Automation website.

End User License Agreement (EULA)

You can view the Rockwell Automation End-User License Agreement ("EULA") by opening the License.rtf file located in your product's install folder on your hard drive.

Open Source Licenses

The software included in this product contains copyrighted software that is licensed under one or more open source licenses. Copies of those licenses are included with the software. Corresponding Source code for open source packages included in this product are located at their respective web site(s).

Alternately, obtain complete Corresponding Source code by contacting Rockwell Automation via the Contact form on the Rockwell Automation website: http://www.rockwellautomation.com/global/about-us/contact/contact.page
Please include "Open Source" as part of the request text.

A full list of all open source software used in this product and their corresponding licenses can be found in the OPENSOURCE folder. The default installed location of these licenses is `C:\Program Files (x86)\Common Files\Rockwell\Help\FactoryTalk Services Platform\Release Notes\OPENSOURCE\index.htm`.

System requirements

Review these minimum and recommended system requirements for installing, configuring, and running SequenceManager Event Console. Unless noted, these requirements assume that no other applications are installed on the computer. Preferred operating systems and software applications are prioritized for support, testing, and post-release patch qualifications.

Systems that do not meet the minimum requirements for the version of the operating system and database being used are not covered under warranty.

IMPORTANT For more information about supported operating systems and other Rockwell Software product version support, refer to the Product Compatibility and Download Center (PCDC).

Operating systems

Ensure that all selected hardware is on the compatibility list for any one of the following:

- Windows Server®
  Windows Server 2019 Standard Edition (preferred)
  Windows Server 2016 Standard Edition (preferred)
  Windows Server 2019 DataCenter Edition
  Windows Server 2016 DataCenter Edition
  Windows Server 2012 R2 Standard Edition or DataCenter
  Windows Server 2012 Standard Edition or DataCenter
- Windows®
  Windows 10 Professional (64-bit) Build 1909 or later (preferred)
  Windows 10 Enterprise (64-bit) Build 1909 or later

Database applications

- SQL Server®
  SQL Server 2019 (English version only)
  SQL Server 2017 (English version only)
  SQL Server 2016 Service Pack 1 (English version only)
  SQL Server 2014 Service Pack 3 (32-bit and 64-bit, English version only)
  SQL Server 2012 Service Pack 4 (32-bit and 64-bit, English version only)

Rockwell Software

- Logix Designer version 33
- FactoryTalk Linx version 6.20 (CPR 9 SR 12) or later
- FactoryTalk Activation version 4.04 or later
- >FactoryTalk Services Platform version6.20 (CPR 9 SR 12) or later
- FactoryTalk View SE version 12.0 (preferred)
- FactoryTalk View SE version 11.0

Rockwell Automation Test Environment

Rockwell Automation tests software products under a standard configuration of operating systems and antivirus software. For additional information see the Knowledgebase Document ID: PN24 - Rockwell Software Products and Antivirus Software.

Install SequenceManager Event Components

Install SequenceManager Event Components to start the event handling services.

Important:	If this install is an upgrade to the Batch system and the BatchHistoryEx SQL database is already being used, back up the database before installing the SequenceManager Event Components.

To install SequenceManager Event Components:

1. Access the Product Compatibility and Download Center (PCDC) to download the **SequenceManager Event Install.exe**.
2. Run the **SequenceManager Event Install.exe** file to install the SequenceManager Event Components.
3. To read the end-user license agreement, select **license terms and conditions**. Then select the check box to accept the terms and conditions. Select **Next**.
4. Select the SequenceManager Event Components to install:
   - **Batch History Database and Reports**

Important:	The database is selected to migrate by default. If **Overwrite** is selected, the existing Batch history database will be deleted.

   - If SQL authentication is being used, select **Use SQL Authentication** and then enter the **SQL Username** and the **SQL Password**.
5. Select **Install**.

Close the installation window when the installation has complete.

See also

SequenceManager and related components overview on page 13

SequenceManager and related components overview

Use the SequenceManager to model and execute sequential manufacturing processes using the ControlLogix features described in the following tasks:

- Configure the coordination of Equipment Phase execution using the Equipment Sequence Editor.
- Execute Equipment Sequence programs using ControlLogix.
- Monitor and manage running Equipment Sequences using the Logix Designer application.
- Enable operators to monitor and manage running Equipment Sequences and Equipment Phases by adding SequenceManager ActiveX controls to FactoryTalk View SE displays.
- Subscribe and collect generated sequence events using SequenceManager Event Client Service and SequenceManager Event Archiving Service.

The following diagram illustrates the components that are part of the SequenceManager and their responsibilities.

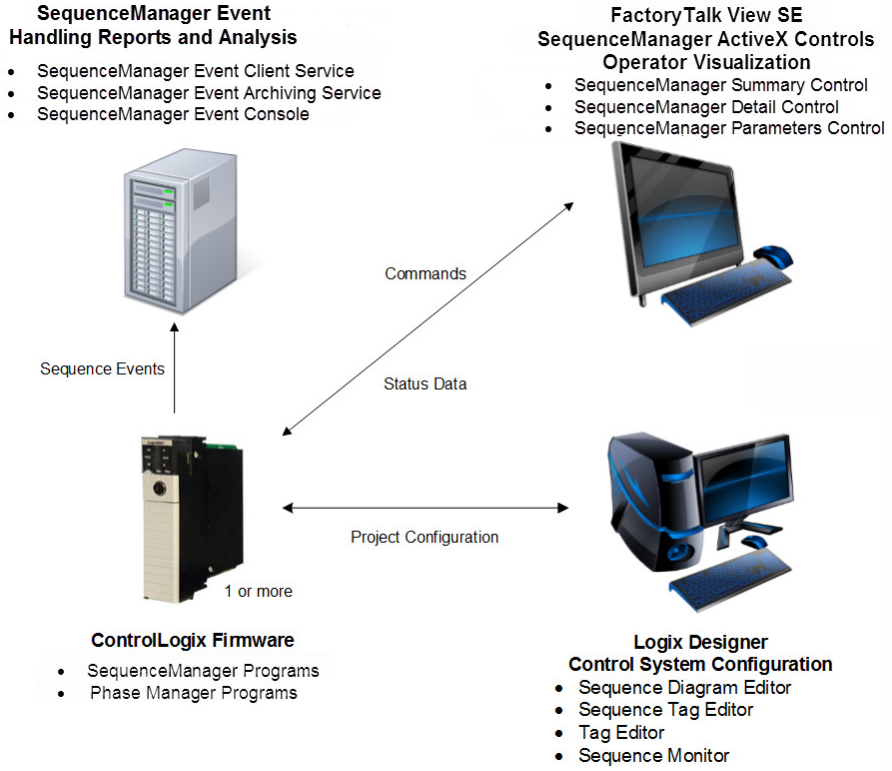

See also

Logix Designer, Sequence Editor, and Sequence Monitor on page 14

ControlLogix Firmware on page 14

SequenceManager Controls on page 14

SequenceManager Event Handling applications on page 15

Logix Designer, Sequence Editor, and Sequence Monitor

The Equipment Sequence Editor is used to create Equipment Sequence programs. The sequence diagram defines a sequence of Equipment Phases to be run, the order of execution, and their parameter data necessary to make the product. Input and output parameters are defined in the Equipment Sequence using the Sequence Tag Editor. Equipment Sequence programs and their tags are fully integrated with all Logix program and tag authoring capabilities.

The Equipment Sequence Monitor is the online version of the Equipment Sequence Editor and is used to monitor and interact with Equipment Sequences that have been downloaded to the controller. The control engineer can do the following:

- Command the Equipment Sequence.
- Change the value of parameters and attributes.
- Interact with the executing sequence.

See also

SequenceManager and related components overview on page 13

ControlLogix Firmware

The Equipment Sequence program firmware implements all the code necessary to manage the use of Equipment Phase programs, shares data between a sequence program and one or more Equipment Phase programs, and coordinates execution of the Equipment Phases.

When an Equipment Sequence or sequence element changes status or an operator interacts with the Equipment Sequence, the firmware generates an event. Once an event is generated, it is published for external applications to receive.

See also

SequenceManager and related components overview on page 13

SequenceManager Controls

The SequenceManager ActiveX controls provide operator visualization of the Equipment Sequence program. There are three operator controls for viewing and interacting with the Equipment Sequences.

The **Sequence Detail Control** provides the operator with a detailed view of an Equipment Sequence, including its chart structure, steps, and transitions. The runtime status of the sequence program and its sequence elements are also shown. The operator can command the Equipment Sequence from this control.

The **Sequence Summary Control** displays the sequence program status for each of the Equipment Sequences downloaded to the controller. The **Sequence Summary Control** also allows the operator to view and command a selected Equipment Sequence.

The **Sequence Parameters Control** displays a table of all sequencing parameters and step tags of a specified Equipment Sequence, and allows the operator to command a selected sequencing parameter or step tag. To refine the display, configure the table to filter the information displayed.

See also

SequenceManager and related components overview on page 13

Logix Designer, Sequence Editor, and Sequence Monitor on page 14

ControlLogix Firmware on page 14

SequenceManager Event Handling applications

The SequenceManager Event Services Console provides the user interface for performing the following tasks:

The Equipment Sequence Manager Event Services Console provides the user interface for performing the following tasks:

- Start and stop the Equipment Sequence Manager Event Client Service and the Equipment Sequence Manager Event Archiving Service.
- Display the status of Equipment Sequence Manager Event Client Service and the Equipment Sequence Manager Event Archiving Service.
- Configure the Equipment Sequence Manager Event Client Service Settings and Sequence Manager Event Archiving Service Settings.

The SequenceManager Event Client, a service external to the controller, receives the event from the general event log. The Event Client saves generated raw events into a temporary file.

The SequenceManager Archiving Service processes the raw event files, localizing, translating, and assembling data into the formats used by PlantPAx Historian and reporting applications. This data is written to an .EVT file and there is an option to write to a SQL Server database.

PlantPAx applications read the generated events and process them.

Tip: The SequenceManager Event Handling applications are installed separately from the Logix Designer installation process.

See also

SequenceManager and related components overview on page 13

Logix Designer, Sequence Editor, and Sequence Monitor on page 14

ControlLogix Firmware on page 14

SequenceManager Controls on page 14

Overview of Equipment Sequence Editor

The following image identifies the main areas of the Equipment Sequence Editor.

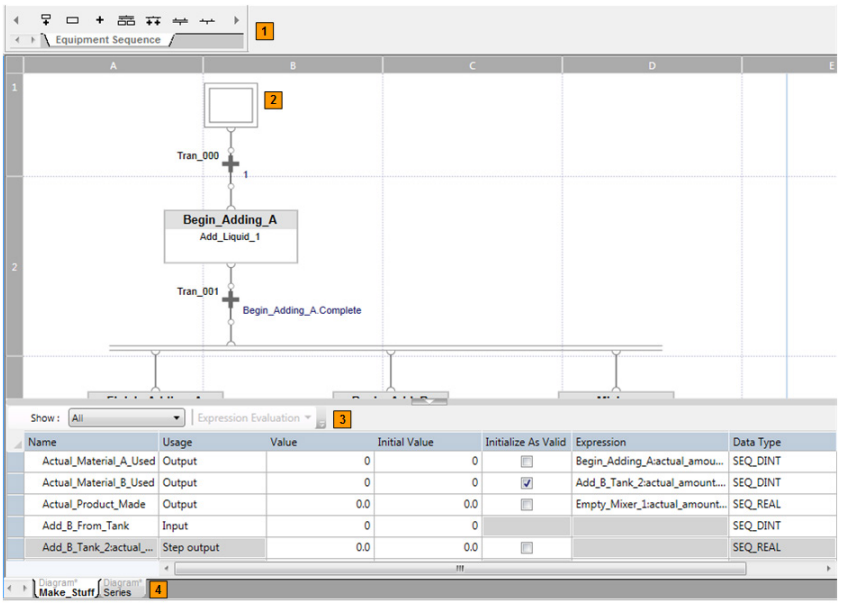

Item	Name	Description
1	Equipment Sequence Editor toolbar	Use to add sequence elements to the equipment sequence diagram.
2	Equipment Sequence Diagram workspace	Use to construct and configure equipment sequence diagrams.
3	Sequence Tag Editor	Use to add and configure parameters for the equipment phase steps in the equipment sequence diagram.
4	Equipment Sequence tabs	Use to select and navigate different equipment sequence diagrams under the tasks.

See also

Equipment Sequence Element toolbar on page 18

Equipment Sequences and Equipment Sequence step commands on page 32

Equipment Sequence Editor

The Equipment Sequence Editor is contained within the routine window in the main Logix Designer application window. Use this editor to edit Equipment Sequence diagram routines. The routine window contains tabs for all open routines, a view for each routine, and the Equipment Sequence toolbar. When a new sequence diagram is first shown, it contains an initial

step, linked to a transition with the default expression TRUE, linked to a terminal step.

The Equipment Sequence Editor layout consists of the Equipment Sequence Element toolbar, the Equipment Sequence Diagram workspace, and the Sequence Tag Editor.

Equipment Sequence Element toolbar - When offline and editing an Equipment Sequence, the Equipment Sequence Element toolbar adds steps, transitions, and branch structures to the sequence diagram.

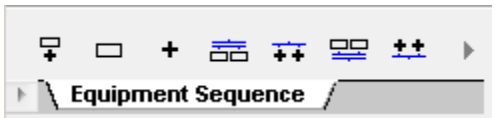

Equipment Sequence Diagram workspace - Use to construct and configure Equipment Sequence diagrams.

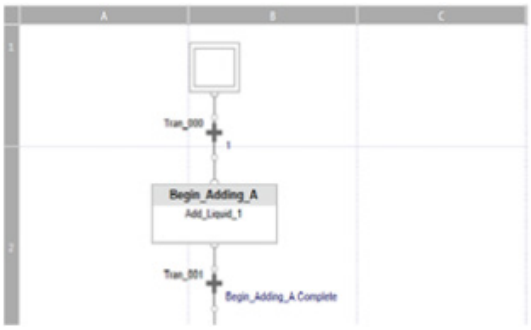

Sequence Tag Editor - Use the Sequence Tag Editor to add and configure sequencing parameters and configure step tag properties. All sequencing parameters and step tags are listed in a table format. The Sequence Tag Editor is the grid that displays at the bottom of the Equipment Sequence diagram.

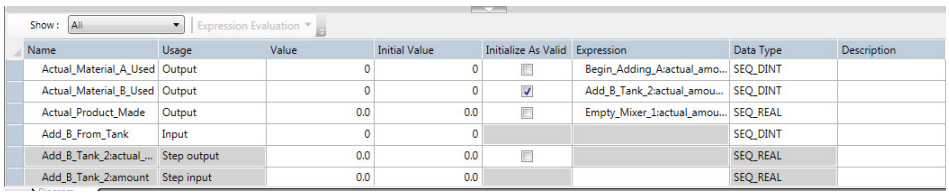

Name	Usage	Value	Initial Value	Initialize As Valid	Expression	Data Type	Description
Actual_Material_A_Used	Output	0	0	☐	Begin_Adding_A:actual_amo...	SEQ_DINT	
Actual_Material_B_Used	Output	0	0	☑	Add_B_Tank_2:actual_amou...	SEQ_DINT	
Actual_Product_Made	Output	0.0	0.0	☐	Empty_Mixer_1:actual_amou...	SEQ_REAL	
Add_B_From_Tank	Input	0	0			SEQ_DINT	
Add_B_Tank_2:actual_...	Step output	0.0	0.0	☐		SEQ_REAL	
Add_B_Tank_2:amount	Step input	0.0	0.0			SEQ_REAL	

See also

Create an Equipment Sequence program on page 34

Equipment Sequence Element toolbar

How do I access the Equipment Sequence Element toolbar?

Double-click the diagram icon in the **Controller Organizer** to open an equipment sequence diagram.

The **Equipment Sequence Element** toolbar is available in the offline mode only. Use the buttons on the **Equipment Sequence Element** toolbar to add steps, transitions, and branch structures to a sequence diagram.

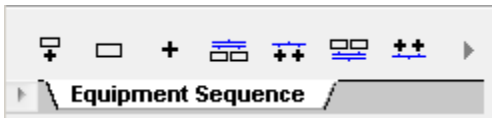

See also

Equipment Sequence Element buttons on page 19

Sequence topologies on page 22

Sequence branch structures on page 22

Equipment Sequence Element buttons

The following table describes the purpose of each Equipment Sequence Element.

Icon	Icon Name	Description
	Add Step and Transition Pair	Use **Add Step and Transition Pair** to add a step and transition pair. Although added as a pair, you can select and edit each element separately.
	Add Disconnected Step	Use the **Add Disconnected Step** to add a step without adding a transition.
	Add Disconnected Transition	Use **Add Disconnected Transition** to add a transition without adding a step.
	Add Simultaneous Divergence	Use **Add Simultaneous Divergence** to create a branch where all linked steps execute simultaneously.
	Add Selective Divergence	Use **Add Selective Divergence** to create a divergence for a selective branch. In a selective divergence, only one of multiple paths is executed--the path containing the transition that first evaluates as TRUE.
	Add Simultaneous Convergence	Use **Add Simultaneous Convergence** to merge simultaneous execution paths back together.
	Add Selective Convergence	Use **Add Selective Convergence** to merge selective divergent paths back into one execution path in the selective branch.

See also

Equipment Sequence Element toolbar on page 18

Construct an Equipment Sequence diagram on page 41

Steps to create an Equipment Sequence diagram

An Equipment Sequence diagram is a graphical representation of a sequence that coordinates the execution of equipment. Each diagram comprises basic sequence elements such as steps, links, and transitions structured in a specific topology. Each Equipment Sequence will have one routine that is configured by adding elements and applying branch structures using buttons available from the Equipment Sequence Element toolbar in the Equipment Sequence Editor.

Once the need for an Equipment Sequence has been determined, the tasks listed in the following table should be done to create the Equipment Sequence.

	Task	How
1	Identify and create Equipment Phases	Considering the equipment associated with an operational unit of equipment, identify the actions that equipment can perform.
2	Identify the manufacturing procedure to be automated	Analyze the manufacturing process and break it into a series of manufacturing actions or steps that are performed serially, conditionally, or simultaneously. Identify the conditions when one manufacturing step should stop and the next be started.
3	Configure the Sequence Diagram	Construct the diagram routine to model the manufacturing process. Each step represents one use of an Equipment Phase to perform an action. Code the conditions for starting and stopping actions as transition expressions.
4	Configure Sequencing Parameters and Step Tags	Analyze the materials and ingredients used by each manufacturing action. The sequencing input parameters provide data to the Equipment Sequence program. The data provided is available to the Equipment Phase input parameters via step input tags. Analyze the reporting requirements. Generated actual values should be stored into the Equipment Phase output parameters. The value of the Equipment Phase output parameter is copied to its associated step output tag when requested to do so or automatically when the phase becomes STOPPED, ABORTED, or COMPLETE. Sequencing output parameters evaluate their expressions when the sequence becomes STOPPED, ABORTED, or COMPLETE.

An Equipment Sequence diagram is intended to control a specific piece of equipment. All steps within the sequence refer to existing Equipment Phase instances within the same controller.

See also

Equipment Sequence diagrams and Sequential Function Chart routines differences on page 20

Equipment Sequence diagram and Sequential Function Chart routine differences

Use the following table to guide decisions about when to use an Equipment Sequence diagram instead of a Sequential Function Chart routine.

Sequential Function Chart routine	Equipment Sequence diagram
Is a single routine.	Coordinates the execution of independent programs.
No concept of state beyond inhibited.	Has an internal state machine to manage sequence execution and display states that are useful to operators.
A step contains a list of structured text actions to perform.	A step has an internal state machine managing interactions between a sequence and the step's associated Equipment Phase.
Transitions enable and disable scanning of a step's actions.	Transitions have an internal state machine managing when steps are activated, deactivated, and automatically commanded.

Sequential Function Chart routine	Equipment Sequence diagram
Operators specify tag values but do not expect to run the program interactively.	Operators expect to interact with the sequence, the steps, the parameters, and the transitions.
Program runs after download, unless inhibited.	Sequences wait to be commanded after download.

See also

Equipment Sequence Editor on page 17

Equipment Sequence Diagrams

An Equipment Sequence diagram is a graphical representation of a sequence that coordinates the execution of equipment. Each diagram comprises basic sequence elements such as steps, links, and transitions structured in a specific topology. Each Equipment Sequence will have one routine that is configured by adding elements and applying branch structures using buttons available from the Equipment Sequence Element toolbar in the Equipment Sequence Editor.

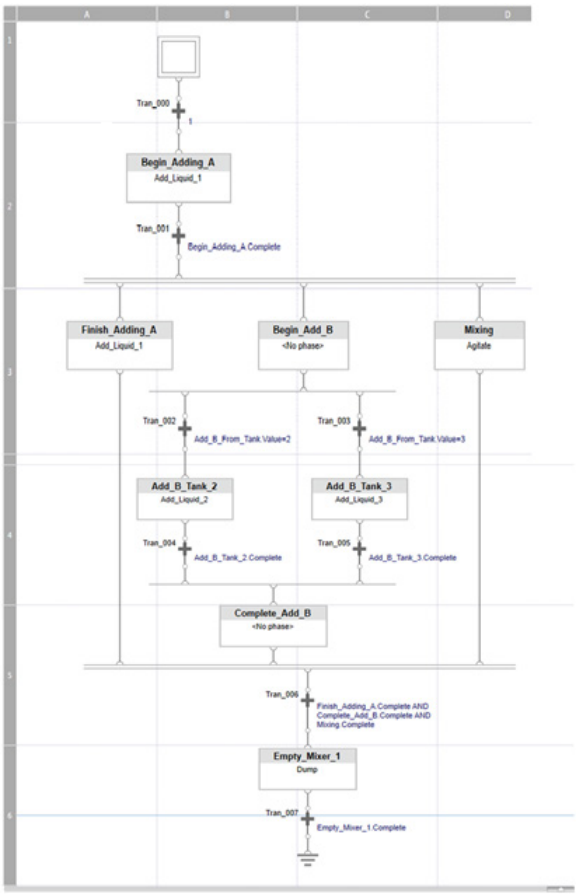

See also

Steps to create Equipment Sequence diagrams on page 19

Sequence topologies

A sequence topology is the arrangement of the step and transition elements in an Equipment Sequence. A sequence topology determines the order in which steps within the sequence execute.

See also

Sequence branch and loop structures on page 22

Series topology on page 22

Selective topology on page 25

Simultaneous topology on page 29

Loop topology on page 31

Sequence branch and loop structures

Equipment Sequence branches allow you to define steps in parallel paths that run simultaneously, or the conditional execution of a specific path among multiple alternate paths. Branches define the path for a subdivision of step elements within the diagram. You can create selective branches and simultaneous branches. Additionally, you can add loops to the diagram. A loop is a branching structure containing a selective convergence followed by a selective divergence.

Divergence and convergence

When creating an alternate (selective) or parallel (simultaneous) path for the execution of steps in an Equipment Sequence diagram by adding a simultaneous or selective branch, it creates a divergence. Merge branch paths back into one path using a convergence branch.

See also

Simultaneous topology on page 29

Selective topology on page 25

Sequence topologies on page 22

Series topology

A series topology consists of a linear ordering of steps and transitions. Steps in the sequence execute directly one after another in series without any branching or looping.

The following example shows an Equipment Sequence diagram that uses a series topology.

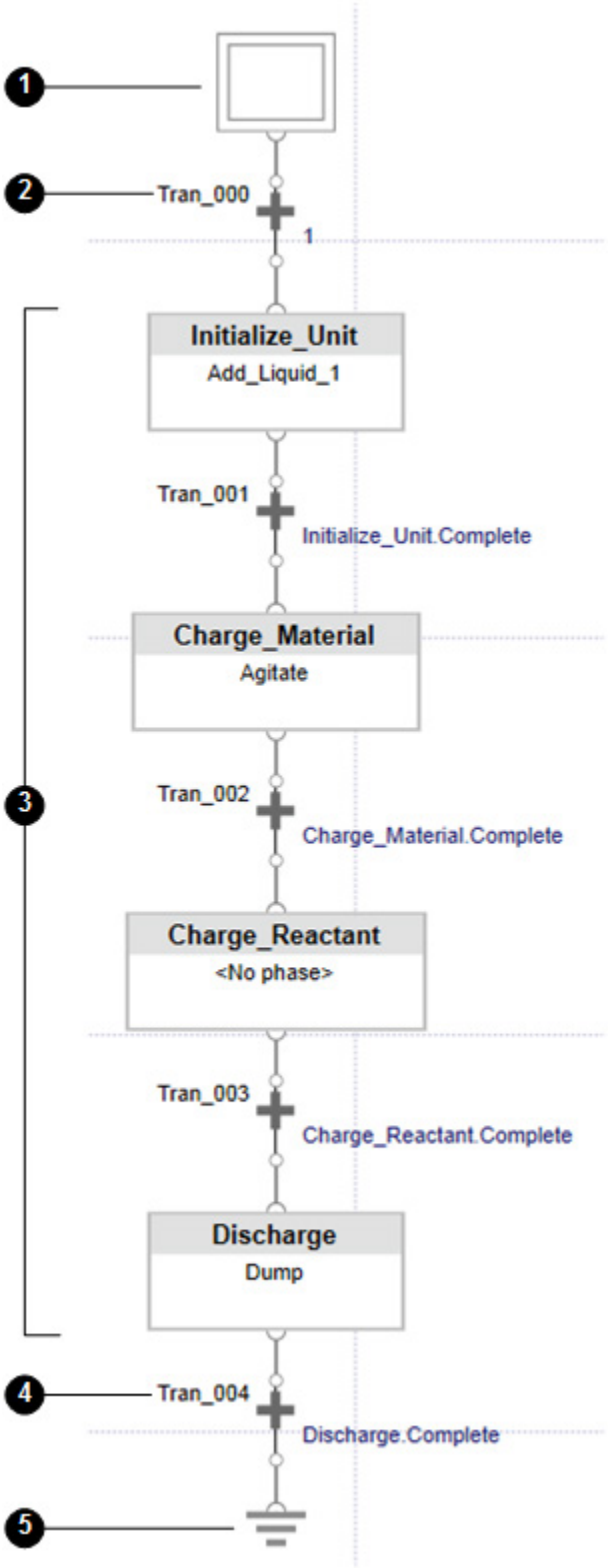

Item	Name	Description
1	Initial step	When the sequence is commanded to START, this step becomes active.
2	Transition	When this transition becomes TRUE, the first step in the sequence becomes active.

3	Steps in series sequence	Each step becomes active and executes when its preceding transition becomes TRUE.
4	Transition	The last transition in the series.
5	End step	When the end step changes to COMPLETE, the Equipment Sequence becomes complete.

See also

Selective topology on page 25

Simultaneous topology on page 29

Loop topology on page 31

Simultaneous branch overview on page 27

Selective branch overview

A selective branching structure is a conditional (OR) type of branch with two or more alternate parallel paths where only one path is selected for execution.

Selective divergence and convergence

The starting point for a selective branch is a selective divergence. When adding a selective divergence, attach a transition to begin each alternative execution path. At runtime, the first transition in each divergent path is evaluated. The first transition to evaluate TRUE deactivates the other transitions and activates the step following it. Sequence execution continues in the selected path until the selective convergence is met.

The ending point for a selective branch is a selective convergence. When adding a selective convergence, the final transition of each divergent path is linked to the branch. At runtime, after the final transition in the selected path is evaluated, execution continues in the merged path.

In a manufacturing process, it is common to execute one branch in preference over another. For example, adding liquid sweetener requires different equipment and processes than adding a powdered sweetener. A selective branch specifies a set of paths and one path is selected for execution. The first transition expression to evaluate TRUE is executed.

See also

Selective topology on page 25

Selective convergence on page 26

Selective divergence on page 27

Create a selective branch on page 39

Merge the selective branch on page 40

Selective topology

A selective topology has two or more alternate paths in which only one path is selected for execution. In a selective branch, only the step in the path or branch under the first transition to evaluate as TRUE is executed. Other paths or branches are ignored. Sequence execution continues in the selected path until that path's final transition.

Tip: All transitions following the selective divergence are active and evaluate their expressions with every scan of the sequence.

The following example shows an Equipment Sequence diagram that uses a selective topology.

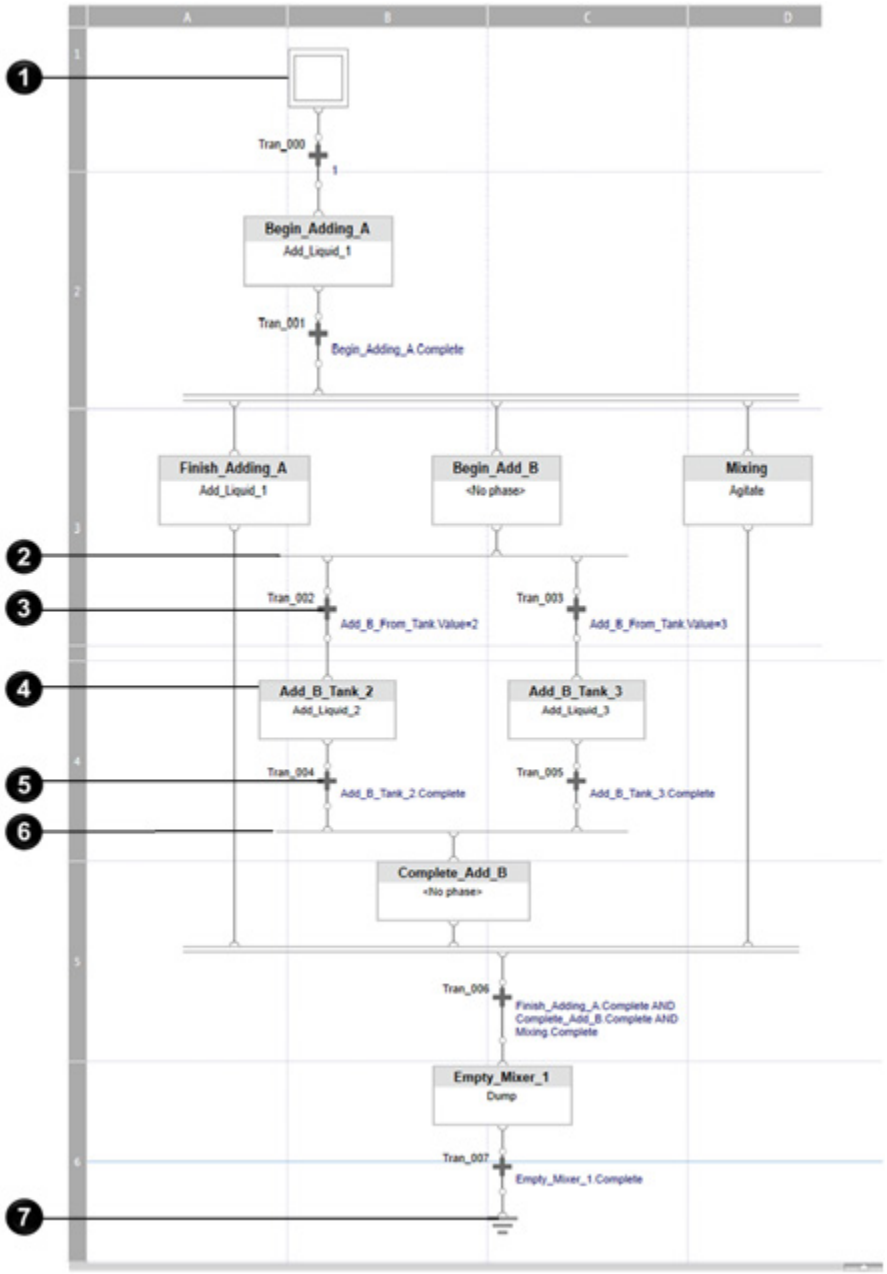

Item	Name	Description
1	Initial step	When the sequence is commanded to START, this step becomes active.

2	Selective divergence	The starting point for a selective branch is a selective divergence. When you add a selective divergence, attach a transition to begin each alternative execution path. At runtime, the first transition in each divergent path is evaluated. The first transition to evaluate TRUE deactivates the other transitions and activates the step following it. Sequence execution continues in the selected path until the selective convergence is met.
3	First transition in the selective branch	The first transition following the selective branch to evaluate as TRUE determines the execution path.
4	First step in selective branch	Only the steps in the path with the first transition to evaluate as TRUE become active.
5	Last transition in branch path	After the final transition in the execution path evaluates as TRUE, sequence execution continues in the merged path.
6	Selective convergence	The ending point for a selective branch is a selective convergence. When you add a selective convergence, the final transition of each divergent path is linked to the branch. At runtime, after the final transition in the selected path is evaluated, execution continues in the merged path.
7	End step	When the end step changes to COMPLETE, the Equipment Sequence becomes complete.

See also

Merge the selective branch on page 40

Series topology on page 22

Simultaneous topology on page 29

Loop topology on page 31

Selective convergence

The ending point for a selective branch is a selective convergence. When adding a selective convergence, the final transition of each divergent path is linked to the branch. At runtime, after the final transition in the selected path is evaluated, execution continues in the merged path.

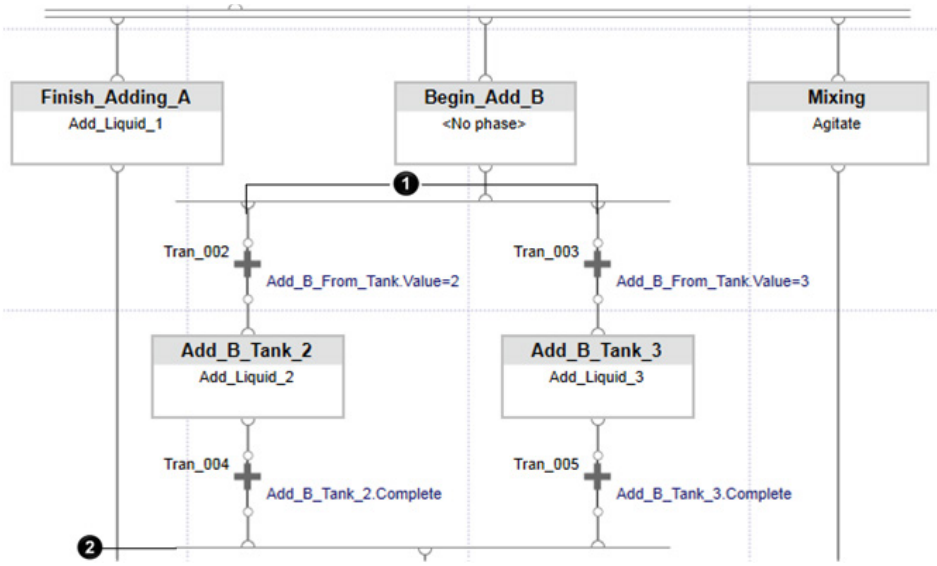

Item	Description
1	A selective branch specifies a set of paths and one path is selected for execution. The first transition expression to evaluate TRUE is executed.

❷	The simultaneous convergence merges the selective execution paths. Execution continues in the merged path.

See also

Selective branch overview on page 24

Construct an Equipment Sequence diagram with a selective topology on page 46

Selective divergence

The starting point for a selective branch is a selective divergence. When adding a selective divergence, attach a transition to begin each alternative execution path. At runtime, the first transition in each divergent path is evaluated. The first transition to evaluate TRUE deactivates the other transitions and activates the step following it. Sequence execution continues in the selected path until the selective convergence is met.

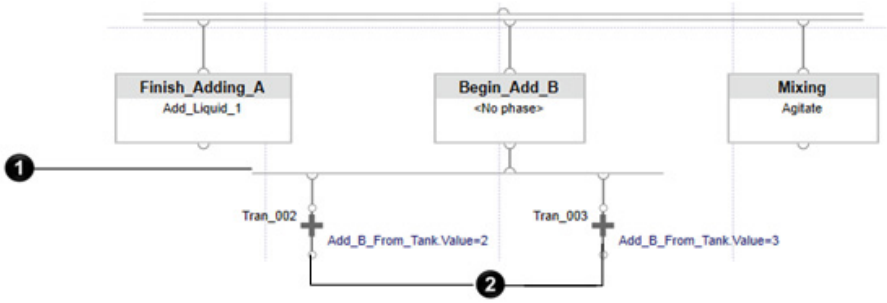

Item	Description
❶	A selective branch specifies a set of paths and one path is selected for execution. The first transition expression to evaluate TRUE is executed.
❷	The simultaneous convergence merges the selective execution paths. Execution continues in the merged path.

See also

Selective branch overview on page 24

Construct an Equipment Sequence diagram with a selective topology on page 46

Simultaneous branch overview

A simultaneous branch is a type of branch with two or more parallel paths where all paths within the branch are selected to execute at the same time. This is also known as a non-conditional (AND) branch.

Simultaneous divergence and convergence

A simultaneous divergence is a branching structure that allows steps in two or more paths to run in parallel.

A simultaneous convergence is a branching structure that brings together two or more paths run in parallel into a single path.

In a manufacturing process, it is common to execute several branches at the same time. For example, adding two separate materials while mixing the same materials. One approach is to build three Equipment Sequences. Another approach is to define all three processes within a single Equipment Sequence and execute the processes simultaneously at run-time. A simultaneous branch specifies all the paths and executes them simultaneously. All steps linked to the simultaneous branch must be active before the transition below the simultaneous convergence will evaluate.

The following example shows a simultaneous branch and its elements.

This example shows three simultaneous paths: one to add Material_A, one to add Material_B, and one to mix the ingredients. Item **1** shows the transition evaluating TRUE, resulting in the simultaneous execution of the first step of each path. The simultaneous divergence in item **2** creates the three paths to execute in item **3**. In item **4**, the first step of each path is configured. The simultaneous convergence in item **5** merges all three simultaneous paths back together. Tran_006 in item **6** begins evaluating when all steps above the simultaneous convergence are active. When the transition expression evaluates TRUE, execution of the simultaneous paths ends and execution continues to the next step.

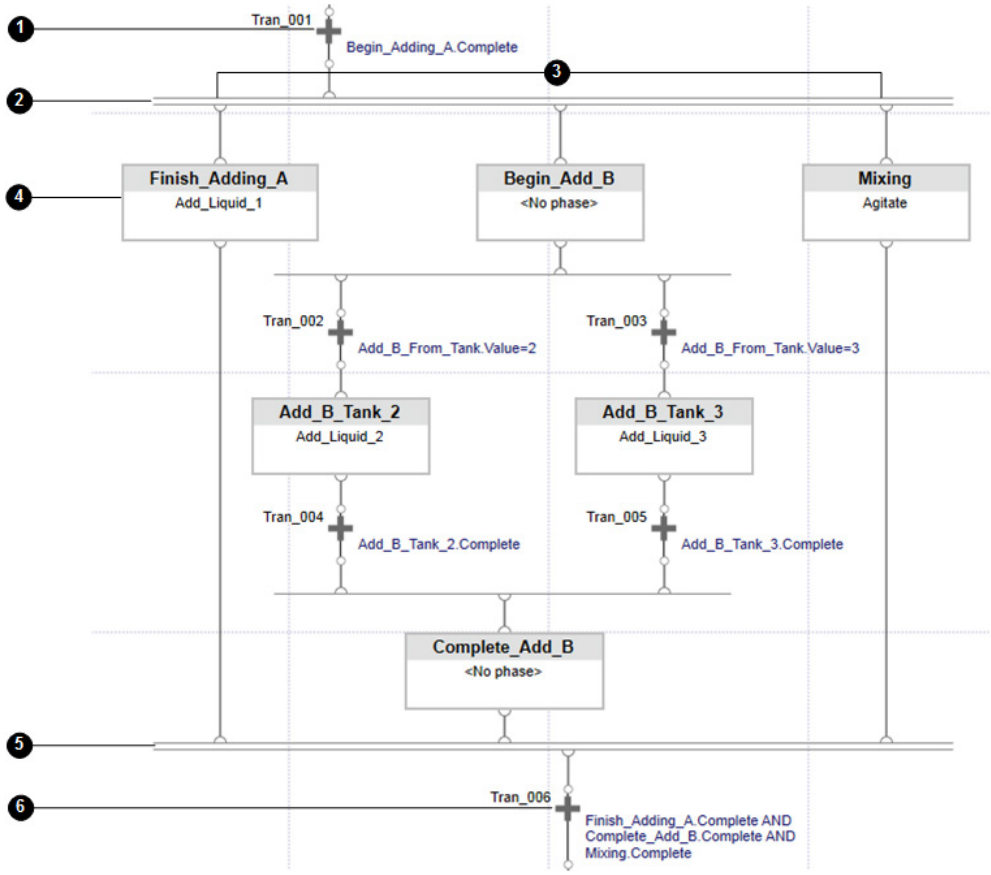

See also

Simultaneous topology on page 29

Simultaneous topology

A simultaneous topology has two or more parallel paths that execute their steps at the same time. In a simultaneous branch, the steps immediately following a simultaneous divergence branch start execution together. Step execution continues in all paths until the transition following the simultaneous convergence evaluates as TRUE. To execute across the simultaneous convergence branch, all steps immediately preceding the convergence must be active and the transition (Transition 3 in the example) immediately following the convergence must evaluate as TRUE.

Important:	All the steps immediately following the simultaneous divergence are active and become active at the same time. If one step cannot be activated (attached), the other steps do not start to execute until all are active.

The following example shows an Equipment Sequence diagram that uses a simultaneous topology.

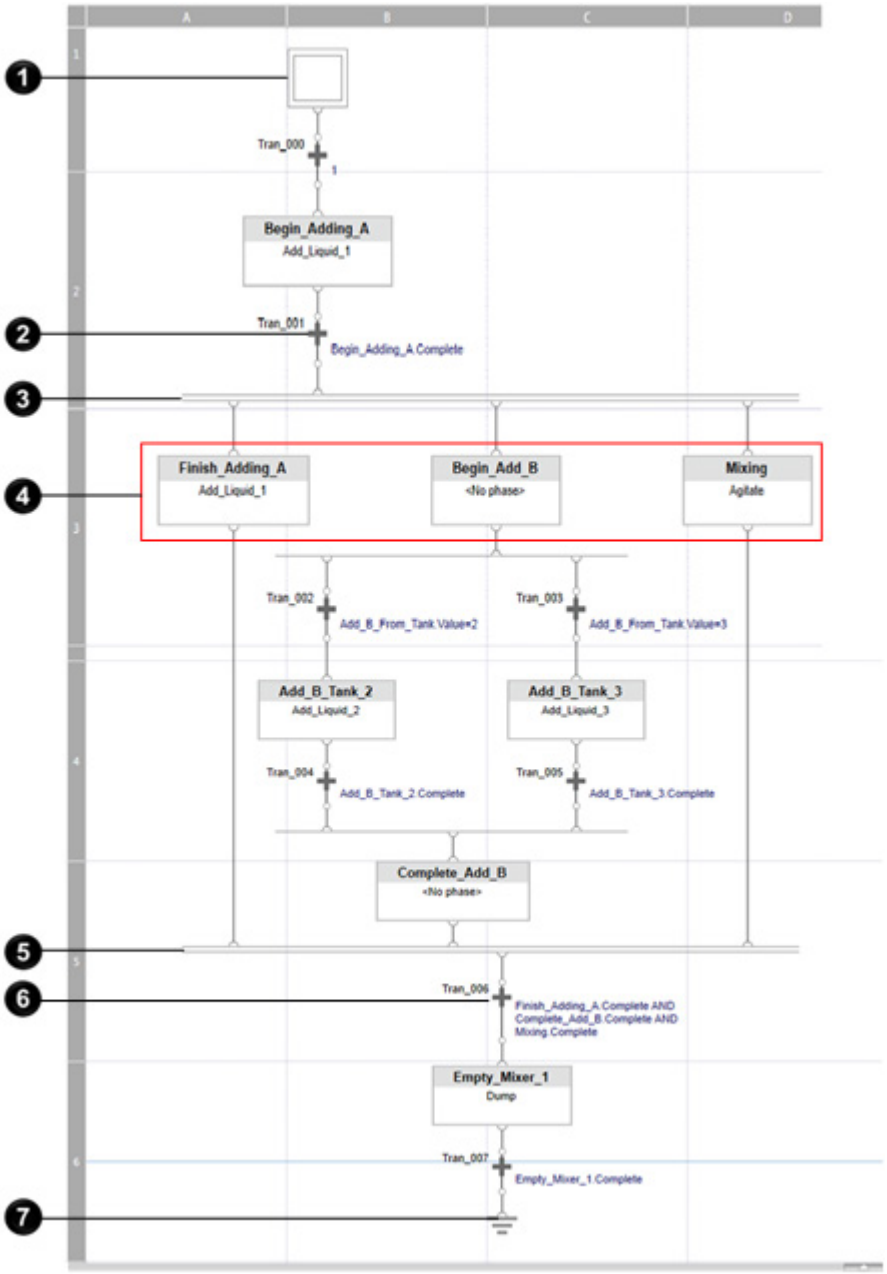

Item	Name	Description
1	Initial step	When the sequence is commanded to START, this step becomes active.
2	Transition preceding branch	Transition preceding the simultaneous branch. After it evaluates as TRUE, all steps linked to the simultaneous branch become active.
3	Simultaneous divergence	A simultaneous divergence is a branching structure that allows steps in two or more paths to run in parallel.
4	Branch paths	The series of steps forming one path within the simultaneous branching structures. All first steps in all branch paths become active and start execution at the same time.
5	Simultaneous convergence	A simultaneous convergence is a branching structure that brings together two or more paths run in parallel into a single path.
6	Transition following branch	Transition following the simultaneous branch. After it evaluates as TRUE, sequence execution continues in the merged path.
7	End step	When the end step changes to COMPLETE, the Equipment Sequence becomes complete.

Important: The transition following the simultaneous convergence will not begin evaluating its expression until all the steps preceding it are active. Using the illustration above, for example, this ensures that step **Complete_Add_B** is executed even if Tran_001's expression evaluates TRUE before **Complete_Add_B** is run.

See also

Series topology on page 22

Selective topology on page 25

Loop topology on page 31

Simultaneous branches on page 27

Loop topology

A loop topology has a path of execution that links back into a preceding step to create a loop which repeats the execution of steps.

The example shows an Equipment Sequence diagram that contains a sequence loop.

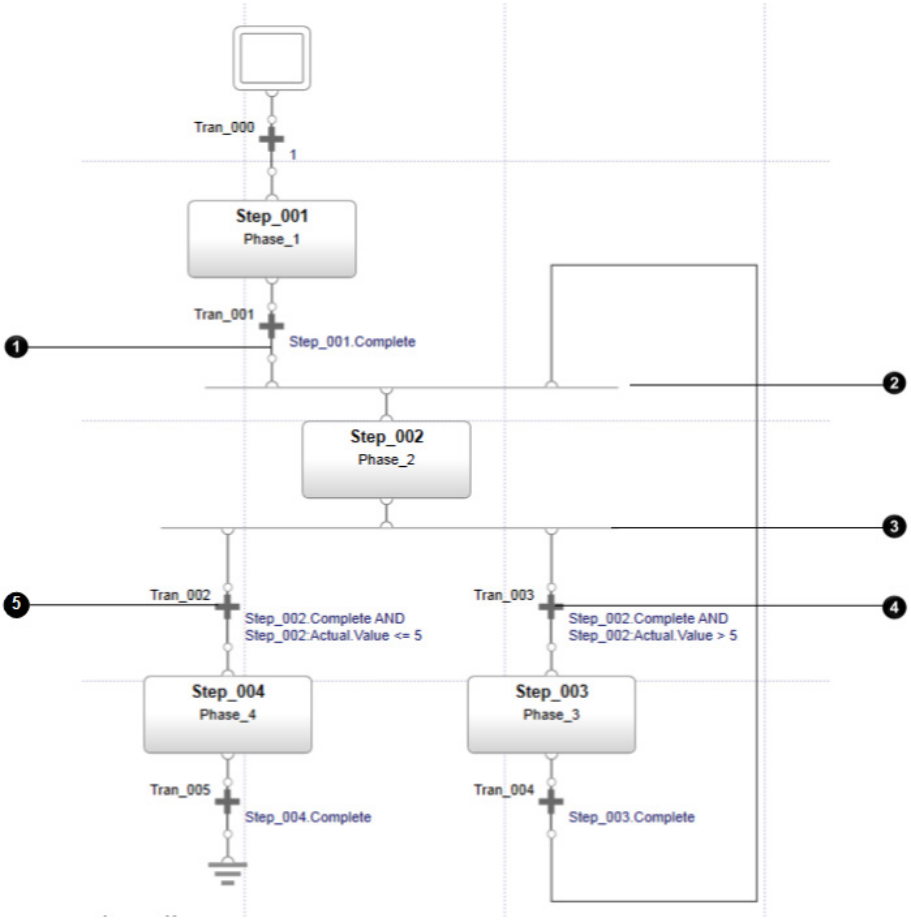

Item	Name	Description
1	Transition preceding a branching structure	This transition serves to stop the preceding step and start its following step, just as any transition does in a series.
2	Selective convergence	This is the way the loop structure is entered.
3	Selective divergence	This is the way the loop structure is exited.
4	Transition after the selective divergence branch for the loop	If the transition in the loop evaluates as true, the loop becomes the execution path.
5	Transition after the selective divergence for the non-loop path	If the transition in this path evaluates as TRUE, this path is the execution path.

See also

Sequence topologies on page 22

Sequence branch and loop structures on page 22

Equipment Sequences and Equipment Sequence step commands

The following table shows the commands that can be used with Equipment Sequences, and Equipment Sequence steps with their associated Equipment Phases. When you hover over the icon, the button background shows a dark shade of blue and a dark blue outline.

Icon	Command	Description
	Start	The **Start** button commands: • The Equipment Sequence to start execution. • The Equipment Sequence step and the associated phase to start.
	Hold	The **Hold** button commands: • The Equipment Sequence to hold active transitions and active steps and their associated Equipment Phases. • The Equipment Sequence step and its associated phase to hold.
	Reset	The **Reset** button commands: • The Equipment Sequence to reset active transitions and active steps and their associated Equipment Phases. • The Equipment Sequence step and its associated phase to reset.
	Abort	The **Abort** button commands: • The Equipment Sequence to hold active transitions and active steps and their associated Equipment Phases. • The Equipment Sequence step and its associated phase to abort.
	Stop	The **Stop** button commands: • The Equipment Sequence to stop active transitions and active steps and their associated Equipment Phases. • The Equipment Sequence step and its associated phase to stop.
	Restart	The **Restart** button commands: • The Equipment Sequence to restart active transitions and active steps and their associated Equipment Phases from a HELD state. • The Equipment Sequence step and its associated phase to restart from a HELD state.

Icon	Command	Description
	Pause	The **Pause** button commands: • The Equipment Sequence to pause execution of the sequence when active transition expressions evaluate TRUE. • The Equipment Sequence step and its associated phase to enable pausing when an Equipment Phase Paused (PPD) instruction is executed. When the **Pause** button is on, the button background is a light blue with a dark blue outline. A Resume command disables the Pause command so the Equipment Sequence or Equipment Sequence step with its associated phase runs normally until commanded to pause again.
	Auto Pause	The **Auto Pause** button commands: • The Equipment Sequence to pause execution of the sequence when active transition expressions evaluate TRUE. • The Equipment Sequence step and its associated phase to enable pausing when an Equipment Phase Paused (PPD) instruction is executed. When the **Auto Pause** button is on, the button background is a light blue with a dark blue outline. A **Resume** command disables the command to pause, the **Auto Pause** command sets the Pause Enabled flag to TRUE.
	Resume	The **Resume** button commands: • The Equipment Sequence to resume execution of the sequence. • The Equipment Sequence step and its associated phase to resume execution. For an Equipment Sequence, all transitions in the FIRING state will fire (stopping and resetting preceding steps, attaching, and starting trailing steps). The **Resume** command clears the effects of the **Pause** command, reinitiates execution, and if **Auto Pause** is enabled, reestablishes the Pause.

Equipment Sequence only commands

The following table shows the commands that can be used with Equipment Sequences only.

When you hover over the icon, the button background shows a dark shade of blue and a dark blue outline. When the button is toggled on, the button background is a light blue with a dark blue outline.

Icon	Command	Description
	Take Ownership	Taking ownership means that this application now has the right to command this Equipment Sequence; other internal sequencers, external sequencers, and operators are not allowed to command this sequence. When you have not taken ownership, the icon appears as . When you click to take ownership, the icon appears as .
	Releasing Ownership	Releasing ownership means that internal sequencers, external sequencers, and operators with attachments are allowed to command this sequence. When you have taken ownership, the icon appears as . When you click to release ownership, the icon appears as .

Icon	Command	Description
	Set Sequence ID	The **Set Sequence ID** button assigns the user-specified sequence ID to the Equipment Sequence.
	Automatic	A sequence can operate in two modes: **Automatic** and **Manual**. **Automatic** mode allows the sequencing engine to automatically coordinate executing the sequence. When you are in **Automatic** mode, the icon appears as . When you click to enter **Manual** mode, the icon appears as . You can command a sequence to change modes when the sequence is active.
	Manual	A sequence can operate in two modes: **Automatic** and **Manual**. **Manual** mode does not allow transitions to complete firing, so operators and control engineers directly command steps and their attached phases without interruption from the sequencing engine. When you are in **Manual** mode, the icon appears as . When you click to enter **Automatic** mode, the icon appears as . You can command a sequence to change modes when the sequence is active.
	Initialize Tags	The **Initialize Tags** button updates all sequencing parameter and step tag value members with the configured Initial Value. Also sets the tag's Valid member equal to the value of the InitializeAsValid flag. Enabled if the sequence's state is Idle, and the controller is online.
	Change Active Step	The **Change Active Step** command is a way to change the set of active elements within an executing sequence. The sequence must be in **Manual** mode so transitions will not fire and change the set of steps that are active.
	Clear Failures	The **Clear Failures** command, when applied to a sequence, causes the failure flags on the sequence and all steps and their associate phases to be reset, clearing them. All visual indication of the presence of failures in the sequence and on specific steps are cleared. If the cause of the failure has not been resolved, the next scan by the equipment sequence engine regenerates the failure.

See also

Change active steps in an Equipment Sequence on page 59

Create an Equipment Sequence program

Equipment Sequence programs:

- Describes the order in which Equipment Phases run and when they are started and stopped.
- Run as a program containing only one routine—the sequence diagram.
- Use sequence input parameters and sequence output parameters.
- Displays the same states as a phase. The current state is based on active sequence elements.

Add steps, transitions, links, divergent and convergent branches to manually construct Equipment Sequences. Equipment Sequences are created in either simple series, loop, simultaneous, or selective structures.

To create Equipment Sequence programs:

1. Define a new Equipment Sequence.
2. Configure Equipment Sequence properties.
3. Construct Equipment Sequence diagrams. See **Equipment Sequence Diagrams**.
4. Create a Sequence Parameter using the **New Parameter or Tag** dialog box.

Important:	When the Equipment Sequence scan rate is significantly longer than the Equipment Phase scan rate, sequence events triggered by step state changes may not be generated. If having those event records is necessary, it is advisable to avoid phase state changes occurring in less than the sequence scan rate.

See also

Equipment Sequence Diagrams on page 21

Define a new Equipment Sequence

In **New Equipment Sequence,** define the properties of an Equipment Sequence.

Before you begin:

- Go offline with the controller.

To define a new Equipment Sequence:

1. Go to **File > New Component > Equipment Sequence** to enter properties for the new Equipment Sequence.
2. In **Name**, enter a name for the Equipment Sequence.
3. (Optional) In **Description**, enter a description for the Equipment Sequence.
4. (Optional) To make the Equipment Sequence program a child of an existing program in the logical model, select the **Parent** program. Otherwise, select **None**.
5. From **Schedule In**, choose the task to schedule the Equipment Sequence.

   The list contains only tasks in which the Equipment Sequence can be scheduled. If you created the Equipment Sequence by right-clicking a task in the **Controller Organizer**, that task is selected by default.
6. (Optional) To give the Equipment Sequence a version string for event reporting purposes, select from the menus for **Major** and **Minor**, and enter text in **Extended Text**.

- **Major**: The major revision number of the Equipment Sequence. The default value is 1.
- **Minor**: The minor revision number of the Equipment Sequence. The default value is 0.
- **Extended Text**: Enter additional revision information. For example, entering **c** in this field, makes the Equipment Sequence version 1.0c. The maximum number of displayable characters is 40. Any characters exceeding the limit are ignored.

7. (Optional) To continue describing the Equipment Sequence revision, use the **Revision Note**.

   For example, list the changes made to the Equipment Sequence since the last revision.

8. (Optional) To inhibit this Equipment Sequence and prevent it from being owned or commanded, select **Inhibit Sequence**. The check box is cleared by default.

   An Equipment Sequence's icon displays in the **Controller Organizer** with the inhibited indicator:

9. (Optional) To open the **Equipment Sequence Editor** upon creation of a sequence, select **Open Sequence Diagram**. The check box is selected by default.
10. To configure additional Equipment Sequence attributes upon creation of a sequence, select **Open properties**. The check box is clear by default. Click **OK** to open **Equipment Sequence Properties**.

See also

Configure Equipment Sequence properties on page 36

Configure Equipment Sequence properties

Configure Equipment Sequence properties in the **Equipment Sequence Properties** dialog box, **Configuration** tab.

Before you begin:

- Go offline with the controller.

All transitions following the selective divergence are active and evaluate their expressions with every scan of the sequence.

To configure Equipment Sequence properties:

1. Open the **Equipment Sequence Properties** dialog box by right-clicking the Equipment Sequence name in the **Controller Organizer** or **Logical Organizer** and selecting **Properties**.
2. Click the **Configuration** tab and revise the properties as necessary.
   a. (Optional) Select **Retain sequence ID when resetting sequence** to retain the sequence ID when resetting the Equipment Sequence. If this option is not selected, a RESET command clears the Sequence ID value of an Equipment Sequence.
   b. (Optional) Select the **Generate sequence events** option to generate sequencing events recording the manufacturing process. This includes operator commands, changes in sequence attributes, and changes in sequencing parameters and step tag values.
   c. (Optional) If you selected the **Generate sequence events** option, enter a number for the **Unit ID** option. The **Unit ID** is an integer value assigned to represent the equipment unit the sequence is coordinating. This value is recorded with sequence events to identify the equipment coordinated.
   d. (Optional) **When starting sequence**, there are two options:
      - **Use initial value of the tag:** Select this option to reinitialize all sequencing parameter and step tag value fields with their configured **Initial Value** field when a START command is sent to the Equipment Sequence.
      - **Use current value of the tag:** Select this option to retain the value of all sequencing parameter and step tag valuefields when a START command is sent to the Equipment Sequence.
   e. (Optional) **When resetting sequence**, there are two options:
      - **Restore the tag to its initial value:** Select this option to reinitialize all sequencing parameter and step tag value fields with their configured **Initial Value** field when a RESET command is sent to the sequence.
      - **Maintain current value of the tag:** Select this option to retain the value of all sequencing parameter and step tag value fields when a RESET command is sent to the sequence.

See also

Equipment Sequence Diagrams on page 21

Create a Sequence Parameter using the New Parameter or Tag dialog box

Sequence input parameters define the set of parameters that must be provided to an Equipment Sequence program to coordinate manufacturing a product. The sequence output parameters record process variables set during execution.

Before you begin:

- Go offline with the controller.

To create a sequence parameter:

1. In the Equipment Sequence, right-click **Parameters and Local Tags**.
2. Select **New Parameter**.
3. In **Name**, enter the name of the sequence parameter.
4. (optional) In **Description**, enter a description of the sequence parameter.
5. In **Usage**, select one of the following:
   - Input Parameter
   - Output Parameter
6. In **Data Type,** click ... to access the **Select Data Type** dialog box and select one of the sequence parameter data types.

   Sequence parameters only allow these system provided data types: **SEQ_DINT**, **SEQ_SINT**, **SEQ_INT**, **SEQ_REAL**, **SEQ_BOOL**, and **SEQ_STRING**.
7. (optional) In **Parameter Connection**, choose a single connection for the sequence parameter.
8. **Scope** shows the new Equipment Sequence where the new parameter is created.
9. In **External Access**, choose whether the sequence parameter will have **Read/Write**, **Read Only**, or no (**None**) access from external applications such as HMIs.

   Tip: It is recommended to have input parameters use **Read/Write** access, and output parameters use **Read Only** access. Often, inputs are assigned by an operator and outputs need to maintain the integrity of the value assigned to it by the sequence.
10. Verify the **Sequencing** check box is selected. This is the default.
11. Click **Create** for create options. Select:
    - **Create and Close** to close the dialog box after creating a tag (default).
    - **Create and Open New** to save the tag created and open another empty **New Tag** dialog box.
    - **Create and Keep Open** to save the tag created and keep the dialog box open with the values still showing.

12. To configure or change the following sequence parameter attributes, go to the **Tag Editor**:
    - Sequencing flag
    - Data Type
    - Description
    - External Access
    - Connections

    For each sequence parameter, the **Description** and **Connections** may be configured for **Value**, **Valid**, and **Initial Value**.
13. To configure or change the following sequence parameter attributes, go to the **Sequence Tag Editor**:
    - Value
    - Initial Value
    - Expression (only available on sequence output parameters)
    - Description

    Tip: The following boxes in the **New Parameter and Tag** dialog box are not configurable, because they do not apply to sequence parameters:
    - Base Tag
    - Alias
    - Style
    - Constant

See also

Example: Construct an Equipment Sequence diagram on page 41

Create a selective branch

A selective branching structure is a conditional (OR) type of branch with two or more alternate parallel paths where only one path is selected for execution.

Selective branch requirements

Following is a summary of requirements for creating paths and connecting elements in a selective branch.

- A selective divergence must be connected to a preceding step before connecting transitions to create separate execution paths in the branch.
- Each execution path in a selective branch must start with a transition.
- Each execution path in a selective branch must end with a transition before connecting a selective convergence and merging the paths.
- A selective convergence must be followed by a step.

To create a selective divergence:

1. On the Equipment Sequence Element toolbar, select **Add Selective Divergence** .
2. Connect the divergence to a preceding step.
3. Add execution paths to the divergence:
   - Add and connect a transition to the divergence to create a separate execution path.
   - Repeat to create additional execution paths as needed.
4. Add and connect additional steps and transitions to each execution path as needed.
5. Verify each execution path ends with a transition.

To create a selective convergence:

1. On the Equipment Sequence Element toolbar, select **Add Selective Convergence** .
2. Connect the convergence to a following step.
3. Merge all paths of the convergence by connecting each path's final transition to the convergence.

See also

Selective topology on page 25

Merge the selective branch

Merge the selective branch in an Equipment Sequence diagram using this procedure.

To merge the selective branch:

1. Select the branch in the Sequence Editor workspace or select on an element to connect to in the sequence diagram.
2. Select **Add Selective Convergence** on the Sequence Element toolbar.
3. Connect the convergence to a step in the sequence diagram.
4. Connect the last transition in each divergent path to the selective convergence.

See also

Selective topology on page 25

Sequence branch and loop structures on page 22

Example: Construct an Equipment Sequence diagram

Following is an example of how to create an Equipment Sequence diagram. In this example, the Equipment Sequence adds material, mixes material, and empties the mixer by doing the following:

- Prepares for mixing by adding 25% of Material_A from Tank 1 at 500 gallons per minute.
- Adds and mixes material through three different execution paths, simultaneously:
  - Finishes adding Material_A from Tank 1 at 25 gallons per minute, using a transfer of control.
  - Adds Material_B from Tank 2 or Tank 3, using a selective divergence.
  - Mixes Material_A with Material_B.
- Empties the mixer after all materials are added and the mixing is complete.

In the following example, an Equipment Sequence diagram is constructed to add material quickly from a tank, then simultaneously continues to add material and mix material, then empties the mix.

To construct this example of an Equipment Sequence diagram:

1. Prepare the Equipment Sequence diagram.
2. Prepare for mixing.
3. Configure simultaneous branches to add and mix material.
4. Converge the simultaneously executed paths.
5. Empty the tank after materials are added and mixed.
6. Finish the Equipment Sequence diagram.

See also

Construct an Equipment Sequence diagram with a selective topology on page 46

Construct an equipment sequence diagram with a simultaneous topology on page 47

Construct an Equipment Sequence diagram with a simple series topology on page 48

Prepare the Equipment Sequence diagram

Prepare the Equipment Sequence diagram.

To prepare the Equipment Sequence diagram:

1. In the Equipment Sequence that was created, delete the link between **Tran_000** and the end step .
2. Move the end step above the transition, so you can find it later.
3. Create sequence input parameters to specify how much **Material_A** and **Material_B** are to be added in later steps.

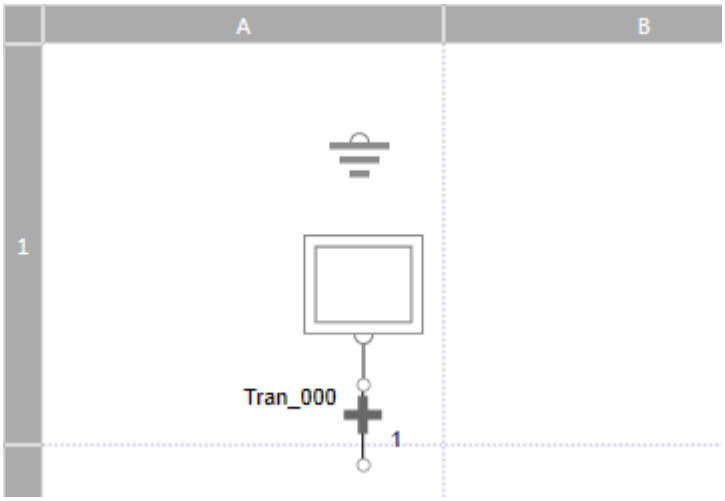

4. To prepare for mixing, configure the step and transition to begin adding **Material_A**.

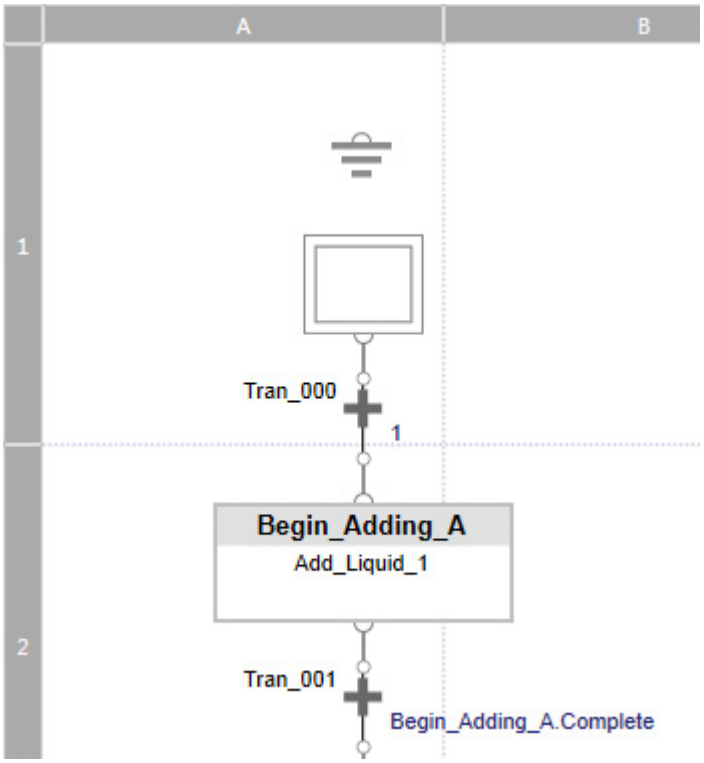

See also

Configure simultaneous branches to add and mix material on page 43

Converge the simultaneously executed paths on page 44

Configure simultaneous branches to add and mix material

Use simultaneous and selective branches to add and mix material.

To configure simultaneous branches to add and mix material:

1. On the Equipment Sequence toolbar, click **Add Simultaneous divergence with elements** branch to add the ingredients and mix the ingredients. This adds two out of the three required steps, so you must add a disconnected step and link it to the simultaneous divergence branch.

   This creates three simultaneous paths: one to add Material_A, one to add Material_B, and one to mix the ingredients.

   

2. For each step, rename the default step name and then select the Equipment Phase.

   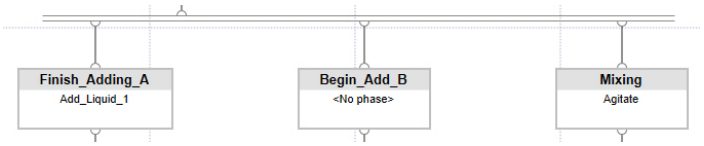

   The Equipment Sequence must choose to add Material_B from either Tank 2 or Tank 3.

3. Add a selective divergence to choose between two paths.

   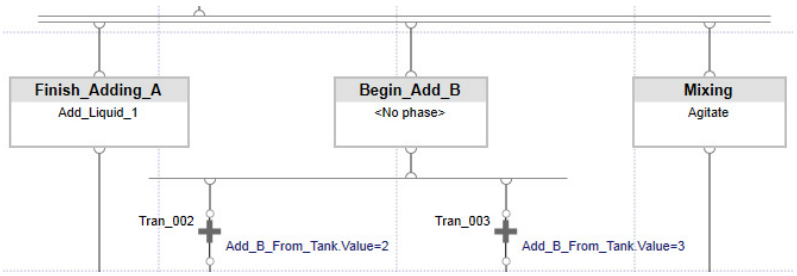

   The transition expressions test a tag to determine which path to use and run the correct Equipment Phase. The tank to be used is a sequence input parameter, **Add_B_From_Tank**. The value **2** means add material from Tank 2 and the value **3** means to add material from

Tank 3. The sequence input parameter is created and configured in a later step.

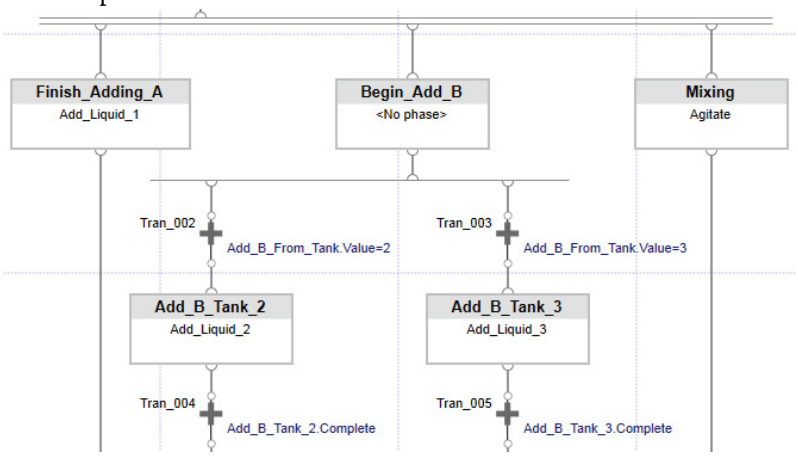

4. Add the selective convergence branch to bring the two separate tank paths back together.

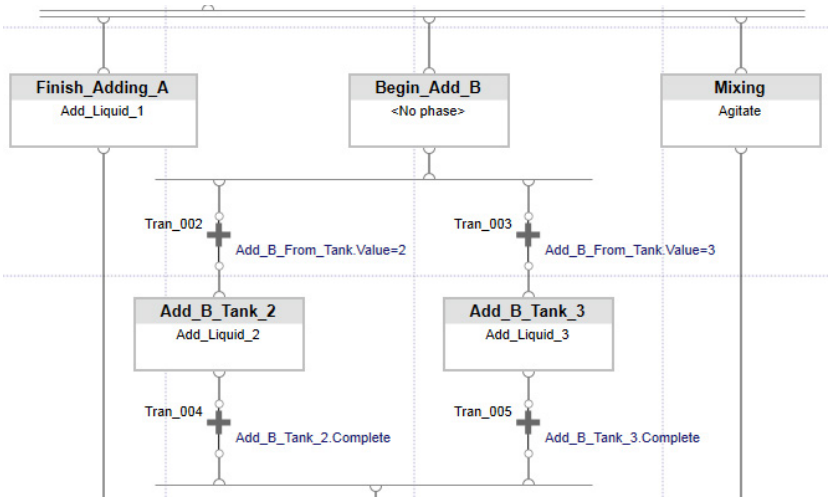

See also

Converge the simultaneously executed paths on page 44

Converge the simultaneously executed paths

Converge simultaneously executed paths.

To converge the simultaneously executed paths:

1. Add a step underneath the selective convergence so all three paths can be merged back together. The simultaneous convergence branch requires all preceding branches to end in steps.

2. After adding and configuring the additional step, add the simultaneous convergence branch.

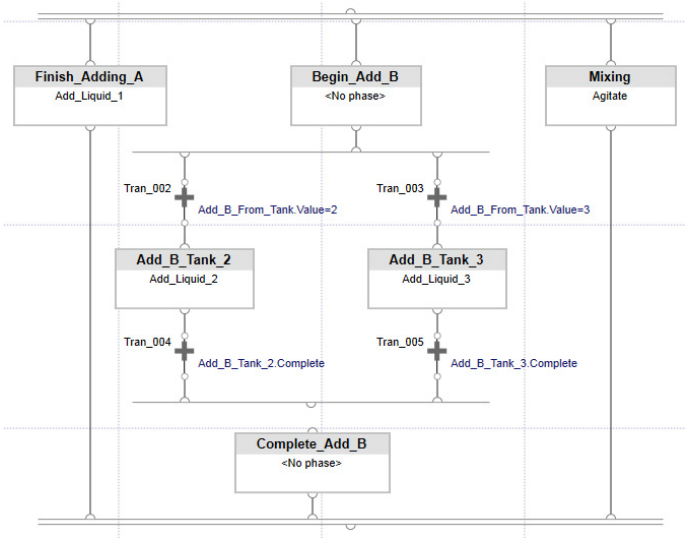

3. Now that the three separate paths are merged back together with materials added and mixed, empty the tank and dump the mixture by adding and configuring a disconnected transition and a step and transition pair.

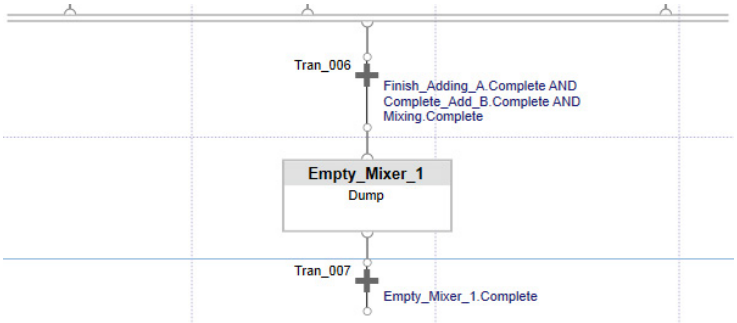

4. To finish the Equipment Sequence diagram, move the end step below the Empty_Mixer_1 step. Then automatically align the sequence elements in the diagram so that the layout is less cluttered and clearly visible.

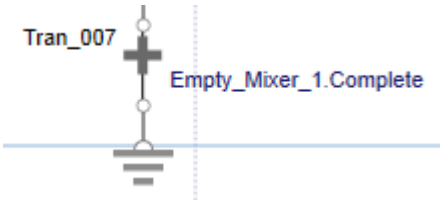

See also

Example: Construct an Equipment Sequence diagram on page 41

Construct an Equipment Sequence diagram with a selective topology

In this example, construct an Equipment Sequence diagram that uses a selective topology.

Before you begin:

- Go offline with the controller.
- Create any Equipment Phases needed for the Equipment Sequence.
- Define a new Equipment Sequence.
- Configure the Equipment Sequence properties.

To construct a selective topology Equipment Sequence diagram:

1. Select the Sequence Editor workspace.
2. On the **Equipment Sequence Element** toolbar, select **Add Step and Transition Pair** .
3. Select the connector of the first element to create a link, and then select the connector of the second element to attach the link.

   Tip: When selecting the initial step link before adding the step and transition pair, the link automatically connects to the pair.
4. Continue to **Add Step and Transition Pair** elements as needed.
5. Assign a name and a phase to each step.
6. Create transition expressions between each step.
7. On the Equipment Sequence Element toolbar, select **Add Selective Divergence** .
8. Connect the divergence to a preceding step.
9. Add execution paths to the divergence:
   - Add and connect a transition to the divergence to create a separate execution path.
   - Repeat to create additional execution paths as needed.
10. Add and connect additional steps and transitions to each execution path as needed.
11. Verify each execution path ends with a transition.
12. On the Equipment Sequence Element toolbar, select **Add Selective Convergence** .
13. Connect the convergence to a following step.
14. Merge all paths of the convergence by connecting each path's final transition to the convergence.
15. Continue adding steps and transitions as needed.
16. Connect to the end step  .
17. Verify the routine:

a. On the Standard toolbar select  .

b. Errors are listed in the Output window on the **Errors** tab at the bottom of the application.

See also

Selective branch overview on page 24

Construct an Equipment Sequence diagram with a simultaneous topology

In this example, construct an Equipment Sequence diagram that uses a simultaneous topology.

Before you begin

- Go offline with the controller.
- Create any Equipment Phases needed for the Equipment Sequence.
- Define a new Equipment Sequence.
- Configure the Equipment Sequence properties.

To construct an Equipment Sequence diagram with a simultaneous topology:

1. Select the Sequence Editor workspace.
2. On the Equipment Sequence Element toolbar, select **Add Step and Transition Pair** .
3. Select the connector of the first element to create a link, and then select the connector of the second element to attach the link.
4. Continue to **Add Step and Transition Pair** elements as needed.
5. Assign a name and a phase to each step.
6. Create transition expressions between each step.
7. On the Equipment Sequence Element toolbar, select **Add Simultaneous Divergence** .
8. Link the divergence to a preceding transition.
9. Add execution paths to the divergence:
   - Add and connect a step or a step and transition pair to the divergence to create a separate execution path.
   - Repeat to create additional execution paths as needed.
10. Add and connect additional steps and transitions to each execution path as needed.
11. Verify each execution path ends with a step.
12. On the Equipment Sequence Element toolbar, select **Add Simultaneous Convergence** .
13. Connect the convergence to a following transition.

14. Merge the paths of the simultaneous divergence by linking the final step of each path to the convergence.
15. Continue adding steps and transitions as needed.
16. Connect to the end step  .
17. Verify the routine:

a. On the Standard toolbar select  .

b. Errors are listed in the Output window on the **Errors** tab at the bottom of the application.

See also

Simultaneous branch overview on page 27

Construct an Equipment Sequence diagram with a simple series topology

This example shows how to create, construct, and configure an Equipment Sequence diagram that uses a series topology.

Before you begin:

- Go offline with the controller.
- Create any Equipment Phases needed for the Equipment Sequence.
- Define a new Equipment Sequence.
- Configure the Equipment Sequence properties.

To construct an Equipment Sequence diagram with a simple series topology:

1. Click the Sequence Editor workspace.
2. On the Equipment Sequence Element toolbar, select **Add Step and Transition Pair**  .
3. Select the connector of the first element to create a link, and then select the connector of the second element to attach the link.

   Tip: Select the initial step link before adding the step and transition pair and the link automatically connects to the pair.
4. Continue to **Add Step and Transition Pair** elements as needed.
5. Assign a name and a phase to each step.
6. Create transition expressions between each step.
7. Continue adding steps and transitions as needed.
8. Connect to the end step  .

9. Verify the routine:

a. In the Standard toolbar, select  .

b. Errors are listed in the Output window on the **Errors** tab at the bottom of the application.

See also

Series topology on page 22

Sequence Execution & Monitoring

Sequence execution is responsible for coordinating:

- The execution of phases in the order specified by the sequence diagram.
- The transition expressions to specify when steps are attached to phases, started, stopped, reset, and attached.
- The step activation to trigger passing Equipment Sequence input data to the Equipment Phase.
- The COMPLETE, STOPPED, or ABORTED triggers passing output data from the Equipment Phase to the Equipment Sequence.
- Generating events to record changes in status and operator interactions.

Equipment Sequence programs are IDLE until they are started. Resetting an Equipment Sequence returns them to an IDLE state. Sequence parameters and step tags can be initialized manually or configured as a sequence property.

Monitoring is performed from the Logix Designer application and the SequenceManager Controls. The Equipment Sequence Monitor is the equivalent of the Sequence Detail Control and the Sequence Parameter Control. The rendering of status is the same. Command interactions are the same with the exception of ownership; the Logix Designer application overrides ownership of the Equipment Sequence and the SequenceManager Controls request ownership.

Equipment Sequence Monitor

Open the **Equipment Sequence Monitor** by opening an Equipment Sequence diagram from the **Controller Organizer** or **Logical Organizer**, and going on line with the controller. The **Equipment Sequence Monitor** is the routine window.

The Equipment Sequence Monitor is the online version of the Equipment Sequence Editor and is used to monitor and interact with Equipment Sequences that have been downloaded to the controller. The control engineer can do the following:

- Command the Equipment Sequence.
- Change the value of parameters and attributes.
- Interact with the executing sequence.

See also

SequenceManager and related components overview on page 13

Equipment Sequence Editor on page 17

Sequence Tag Monitor

Open the **Sequence Tag Monitor** by opening an Equipment Sequence diagram from the **Controller Organizer** or **Logical Organizer**, and going on line with the controller. The **Sequence Tag Monitor** is the grid in the bottom of the diagram.

Use the Sequence Tag Monitor to view and edit sequence parameters and assign step tag values while the controller is online. All sequence parameters and step tags are listed in a table format.

The attributes that can be edited in the Sequence Tag Monitor are: **Value**, **InitialValue**, and **Description**, based on the tag's **External Access** configuration. In the **Sequence Tag Monitor**, parameter expressions can be enabled, disabled, or forced to evaluate.

See also

Sequence Execution & Monitoring on page 51

Step states in an Equipment Sequence

When a step is not active, the step state is inactive. When a step is active, and attached to an Equipment Phase, the step state mirrors the state of the Equipment Phase. The step state is also represented by the color of the step.

Steps with a Do Nothing phase only have two displayed step states: RUNNING and IDLE.

Step States	Description
ABORTING	ABORTING means the Equipment Phase's ABORTING routine is executing.
ABORTED	ABORTED means the Equipment Phase's ABORTING routine is finished.
HOLDING	HOLDING means the Equipment Phase's HOLDING routine is executing.
HELD	HELD means the Equipment Phase's HOLDING routine is finished.
RESETTING	RESETTING means the RESETTING logic is executing.
RESTARTING	RESTARTING means the RESTARTING routine is executing.
RUNNING	RUNNING means the RUNNING routine is executing.
STOPPING	STOPPING means the STOPPING routine is executing.
STOPPED	STOPPED means the STOPPING routine is finished.
COMPLETE	COMPLETE means the RUNNING routine is finished.
IDLE	IDLE means the step is active and attached to the associated Equipment Phase, but the Equipment Phase is not executing a routine.
INACTIVE	INACTIVE means that the step is not active and is not attached to its associated Equipment Phase.

Step execution in a loop sequence

The looping structure is based on placing a selective convergence branch above a selective divergence branch in an Equipment Sequence. The sequence of steps in a loop continue to execute until the branch transition out of the loop is TRUE and the transition to continue in the loop is FALSE. In the selective divergence branch, one transition creates the entrance into the loop and another transition creates the loop exit path.

Step execution in a loop

The following table describes how and when steps in a loop sequence execute - the active step is shaded in gray. This sequence execution example uses a simple sequence with one loop.

Active step	Sequence example	Description
Initial step	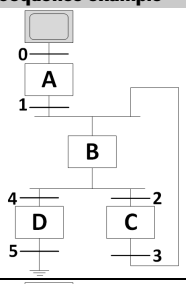	When the sequence is commanded to start, the initial step becomes active.
Step A	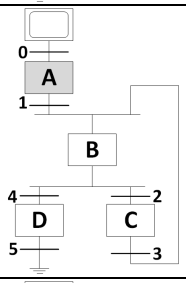	After Transition 0 becomes TRUE, the initial step is STOPPED, RESET, and deactivated. Control is passed to Step A, which is made active and is STARTED. Transition 0 becomes inactive and Transition 1 becomes active.
Step B	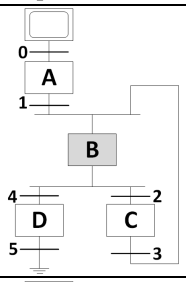	After Transition 1 becomes TRUE, Step A is STOPPED, RESET, and deactivated. Control is passed to Step B, which is made active and is STARTED. Transition 1 becomes inactive and Transition 4 and Transition 2 become active.
Step C	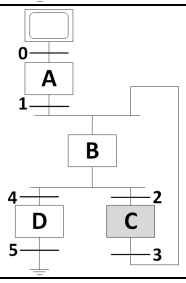	After Transition 2 becomes TRUE first, Step B is STOPPED, RESET, and deactivated. Control is passed to Step C, which is made active and is STARTED. Transition 4 and Transition 2 become inactive, and Transition 3 becomes active.

Active step	Sequence example	Description
Step B	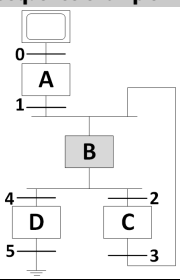	After Transition 3 becomes TRUE, Step C is STOPPED, RESET, and deactivated. Control is passed to Step B, which is made active and is STARTED. Transition 4 and Transition 2 are made active and Transition 3 becomes inactive.
Step D	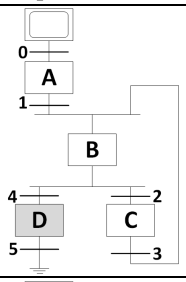	After Transition 4 becomes TRUE first, Step B is STOPPED, RESET, and deactivated. Control is passed to Step D, which is made active and is STARTED. Transition 5 is made active, and Transition 4 and Transition 2 are deactivated.
End step	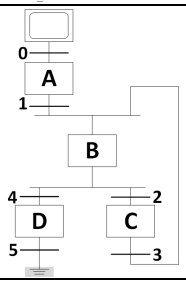	After Transition 5 becomes TRUE, Step D is STOPPED, RESET, and deactivated. Control is passed to the end step, which is activated. The end step immediately becomes COMPLETE. This indicates that the entire sequence is COMPLETE.

See also

Loop topology on page 31

Step execution in an Equipment Sequence

Each step in an Equipment Sequence diagram represents a specific action. Step types include initial steps, Equipment Sequence steps, No phase steps, and end steps.

Each step executes differently.

Initial step

The initial step is activated when the Equipment Sequence starts execution and immediately becomes COMPLETE. The initial step may be activated or deactivated with an change active step command.

Equipment Sequence step execution

The Equipment Sequence step automatically loads step input tag values into the phase input parameters when the Equipment Sequence attaches to the step, depending on configuration of the Equipment Phase. The step

commands the Equipment Phase to start and shows status changes of the Equipment Phase in the status of the step. The step automatically copies phase output parameter values into step output tags when the equipment phase becomes COMPLETE, STOPPED, or ABORTED, depending on configuration of the Equipment Phase.

No phase step

The step immediately becomes COMPLETE when executed.

End step

The end step is activated when the preceding transition starts it and immediately becomes COMPLETE. The end step may be activated or deactivated with an active step change command.

See also

Step execution in a loop sequence on page 53

Step execution in a selective sequence on page 55

Step execution in a simultaneous sequence on page 57

Change active steps in an Equipment Sequence on page 59

Equipment Phase Properties - Configuration tab fields on page 61

Step execution in a selective sequence

In a selective branch, only the step in the path or branch under the first transition to evaluate as TRUE is executed. Other paths or branches are ignored. Sequence execution continues in the selected path until that path's final transition.

Step execution in a selective branch

The following table describes how and when steps in a selective sequence execute - the active step is shaded in gray. This sequence execution example uses a simple step (A-F) sequence with one selective branch.

Active step	Sequence example	Description
Initial step	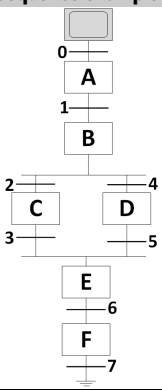	When the sequence is commanded to START, the initial step becomes active.
Step A	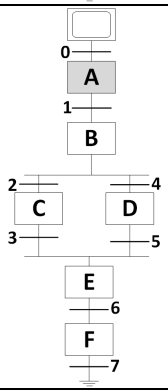	After Transition 0 becomes TRUE, the initial step is STOPPED, RESET, and deactivated. Control is passed to Step A, which is made active and is STARTED. Transition 0 becomes inactive and Transition 1 becomes active.
Step B	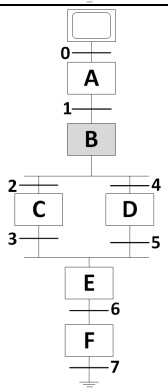	After Transition 1 becomes TRUE, Step A is STOPPED, RESET, and deactivated. Control is passed to Step B, which is made active and is STARTED. Transition 1 becomes inactive and both Transition 2 and Transition 4 become active.
Step C	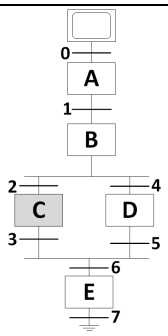	If Transition 2 becomes TRUE first, Transition 4 is deactivated. Step B is STOPPED, RESET, and deactivated. Control is passed to Step C, which is made active and is STARTED. Transition 2 becomes inactive, and Transition 3 becomes active.

Active step	Sequence example	Description
Step E	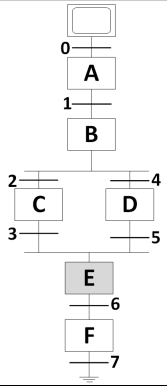	After Transition 3 becomes TRUE, Step C is STOPPED, RESET, and deactivated. Control is passed to Step E, which is made active and is STARTED. Transition 6 is made active, and Transition 3 is deactivated.
Step F	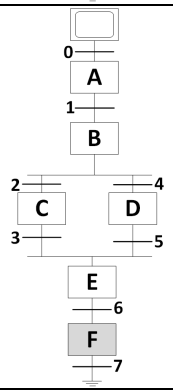	After Transition 6 becomes TRUE, Step E is STOPPED, RESET, and deactivated. Control is passed to Step F, which is made active and is STARTED. Transition 7 is made active, and Transition 6 is deactivated.
End step	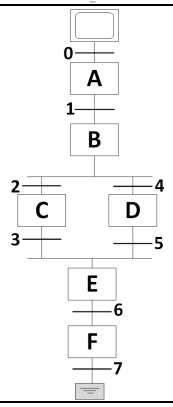	After Transition 7 becomes TRUE, Step F is STOPPED, RESET, and deactivated. Control is passed to the end step, which is activated. The end step immediately becomes COMPLETE. This indicates that the entire sequence is COMPLETE.

See also

Selective branch overview on page 24

Selective topology on page 25

Construct an Equipment Sequence diagram with a selective topology on page 46

Step execution in a simultaneous sequence

In a simultaneous branch, the steps immediately following a simultaneous divergence branch start execution together. Step execution continues in all paths until the transition following the simultaneous convergence evaluates as TRUE. To execute across the simultaneous convergence branch, all steps immediately preceding the convergence must be active and the transition

(Transition 3 in the example) immediately following the convergence must evaluate as TRUE.

Step execution in a simultaneous branch

The following table describes how and when steps in a simultaneous sequence execute - the active step is shaded in gray. This sequence execution example uses a simple five step (A-E) sequence with one simultaneous branch.

Active step	Sequence example	Description
Initial step	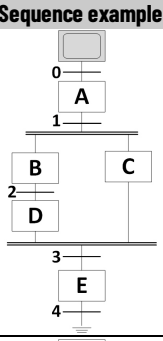	When the sequence is commanded to START, this step becomes active.
Step A	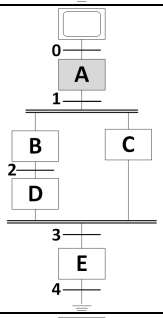	After Transition 0 becomes TRUE, the initial step is STOPPED, RESET, and deactivated. Control is passed to Step A, which is made active and is STARTED. Transition 0 becomes inactive and Transition 1 becomes active.
Step B & Step C	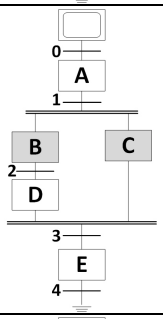	After Transition 1 becomes TRUE, Step A is STOPPED, if it is still RUNNING, RESET and deactivated. Steps B and C become active and are STARTED at the same time. Transition 1 becomes inactive and Transition 2 becomes active.
Step C & Step D	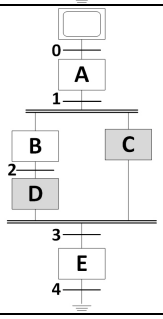	After Transition 2 becomes TRUE, Step B is STOPPED, RESET, and deactivated. Step D is activated and STARTED. Step C remains active. Transition 2 becomes inactive and Transition 3 becomes active, because all the steps immediately preceding the transition are active.

Active step	Sequence example	Description
Step E	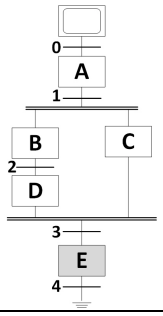	Steps C and D are active, so Transition 3 evaluates its expression. After Transition 3 becomes TRUE, Steps C and D are STOPPED, RESET, and deactivated and Step E is activated and STARTED. Transition 3 becomes inactive and Transition 4 becomes active.
End step	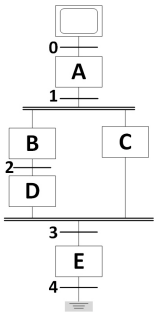	After Transition 4 becomes TRUE, Step E is STOPPED, RESET, and deactivated. The end step is activated and STARTED. The end step immediately becomes COMPLETE. This indicates that the entire sequence is COMPLETE. Transition 4 becomes inactive.

See also

Simultaneous branch overview on page 27

Simultaneous topology on page 29

Construct an Equipment Sequence diagram with a simultaneous topology on page 47

Change active steps in an Equipment Sequence

The **Change Active Step** command is a way to change the set of active elements within an executing sequence. The sequence must be in **Manual** mode so transitions will not fire and change the set of steps that are active.

Before you begin:

- Go online with the controller.
- In the Sequence Editor, open an Equipment Sequence.

To change the active step in an Equipment Sequence:

1. Select **Take Ownership** to take ownership of the Equipment Sequence.
2. (optional) Start the Equipment Sequence.
3. Select to go into **Manual** mode.

4. Inactivate the active step by selecting the step, and use the **STOP** or **ABORT** command.
5. Once the step is **STOPPED** or **ABORTED**, use the **RESET** command to put the step into the IDLE state.
6. Once the step is in the **IDLE** state, place it on the **Steps to deactivate** list using one of these methods:
   - Select **Add** and select the step's check box.
   - Select the step, invoke the menu with a right click, then select **Change Active Step > Add to deactivate list**.
7. Add a step to the **Steps to activate** list using one of the following methods.
   - Select **Add** and check the step's check box.
   - Select the step, invoke the context menu with a right click, then select **Change Active Step > Add to activate list**.
8. Select **Apply** to commit the change to active steps. The steps to become deactivated become INACTIVE, and the steps to be activated become IDLE.
9. Select the icon to go back to **Automatic** mode.
10. Select the icon to start the Equipment Sequence.

Equipment Phase Properties - Configuration tab fields

Use the **Configuration** tab of the **Equipment Phase Properties** dialog box to create or modify the execution of the Equipment Phase. These options are available in the **Configuration** tab.

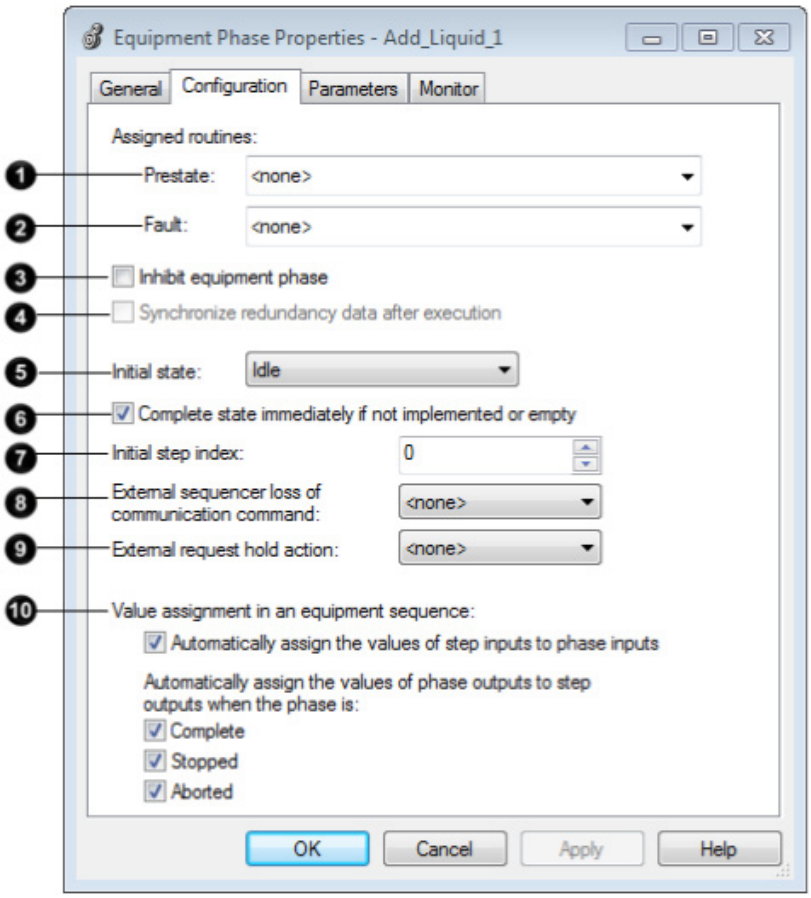

	Name	Purpose
1	**Prestate**	Defines the prestate routine executed prior to the execution of any of the other state routines. Prestate routines are optional routines to perform some failure detection, verify that all control modules are in the correct state, or execute other logic common to all state routines. When the equipment phase is in a state with no associated state routine (for example, IDLE, HELD, STOPPED), the Prestate routine continues to execute, but no state routine executes.
2	**Fault**	Defines the fault routine executed by the equipment phase whenever a major fault occurs within the equipment phase.
3	**Inhibit equipment phase**	Prevents the controller from executing this Equipment Phase. Clear the check box and the controller executes the Equipment Phase. The check box is clear by default.
4	**Synchronize redundancy data after execution**	Synchronizes data with the controller at the end of the phase execution. The check box is not shown for controllers that do not support redundancy. The check box is always enabled for controllers with redundancy enabled as long as the controller is not in Hard Run mode. The check box is disabled when redundancy is not enabled.

	Name	Purpose
5	**Initial state**	The initial state can be: • ABORTED • COMPLETE • IDLE • STOPPED **Tip:** Equipment Phases must be configured to have an **Initial state** of IDLE to work with Equipment Sequences.
6	**Complete state immediately if not implemented or empty**	Use this check box to signal the completion of a state any time the equipment phase transitions to a state where the state routine is not implemented.
7	**Initial step index**	Defines the initial value for the step index.
8	**External sequencer loss of communication command**	Defines the command to invoke if communication with an external sequencer that is currently an owner of the equipment phase fails. • <none> • ABORT • HOLD • STOP
9	**External request hold action**	Defines the action to take when an external request initiated using the Equipment Phase External Request (PXRQ) instruction is in progress and the equipment phase receives a HOLD command while in the RUNNING state. Choose from: • <none> • Clear. Aborts all external requests that are in progress.

10	**Value assignment in an equipment sequence**	Use the **Value assignment in an equipment sequence** to assign values for phase inputs and output in an Equipment Sequence based on the value of step input and outputs.
		• **Automatically assign the value of step inputs to phase inputs** check box. When selected, all phase inputs use the value of the related step input.
		• **Automatically assign the value of phase outputs to step outputs when the phase is:** checkbox. When an Equipment Sequence is in the selected phase, it uses the value of the related step output to evaluate the phase.
		  • COMPLETE
		  • STOPPED
		  • ABORTED

See also

Equipment Phase Properties dialog box - Configuration tab

Configure Equipment Phase properties

Create a Routine

Transition display states

Transition display states show how the transition execution relates to the overall Equipment Sequence execution.

Transition Display State	Transition Color	Description
IDLE	GRAY	The transition is not actively executing.
ARMED	GREEN	The transition is actively evaluating its expression.
FIRING	GREEN	The transition expression has evaluated TRUE. The previous steps is STOPPED and the next steps is started.
STOPPED	BLUE	The transition has completed processing a STOP command and has stopped the transition's execution.

Transition Display State	Transition Color	Description
ABORTED	PURPLE	A Equipment Sequence transition in the ABORTED state has been disabled by an ABORT command and will not advance an Equipment Sequence chart.
HELD	YELLOW/BROWN	An Equipment Sequence transition in the HELD state has been halted by a HOLD command or HELD because of an Equipment Sequence failure and will not initiate or advance the Equipment Sequence transition firing process until issued a RESTART command. If the transition has been HELD due to an Equipment Sequence failure, the failure should be cleared before issuing a RESTART command.
HOLDING	YELLOW/BROWN	An Equipment Sequence transition in the HOLDING state is advancing the Equipment Sequence transition firing process. This transitional state is only visible until the scan processing the HOLD command has finished.

See also

Transition firing states on page 63

Transition firing states

The firing attribute is a subset of the FIRING state and gives a visual indication of the current state.

This firing attribute is visible when the transition expression has evaluated TRUE. The firing process requires several interactions with different phases and is an asynchronous process. Some phases may have programs that can take a long time to finish running (stopping a motor for example), so the firing object shows what the transition is doing. The displayed Firing Attribute values are: COMMITTED, STOPPING, RESETTING, PENDING, and PAUSED.

Firing Attribute	Description
ACQUIRING	The Equipment Sequence is acquiring the right to command the Equipment Phase. For every step that follows the transition, the Equipment Sequence must attach to each associated Equipment Phase before the steps can be activated.
COMMITTED	The transition is committed to firing because the transition expression has evaluated TRUE, but the transition cannot activate the following steps because it is in Manual mode or the Equipment Sequence is in the PAUSED substate.
STOPPING	As part of firing, the Equipment Sequence commands all the active preceding steps to stop. The transition firing state is STOPPING until all commanded steps are STOPPED.
RESETTING	As part of firing, the Equipment Sequence commands all the preceding steps that are STOPPED to RESET. The transition firing state is RESETTING until all the commanded steps are IDLE.
PENDING	The transition is not able to fire because the Equipment Phases of the steps above or below the transition are not in the correct state to permit the transfer of control function.
PAUSED	The transition is committed to fire, but cannot because the Equipment Sequence has been PAUSED. The transition is waiting for a RESUME command.
POST SCANNING	The transition is at the end of the firing process. On the next scan of the Equipment Sequence chart, the transition advances the chart.

See also

Transition display states on page 62

Transition execution

When a transition is activated, it evaluates its expression. If the expression is TRUE, it stops all the preceding steps that are active, resets and detaches from all the preceding steps, and attaches to the following steps. Once it attaches to the following steps, it starts those steps.

See also

Overview of step states in an Equipment Sequence on page 52

Overview of transition display states on page 62

Overview of transition firing states on page 63

Quality of Data

Quality of Data is the concept that a sequencing parameter or step tag can have a value that is not known to be correct. There are three cases:

- Step output tag has not been updated yet. There are three ways the update can occur.
  - When the Equipment Phase has not requested loading a value to the step output tag (PXRQ instruction).
  - The Equipment Phase has not run to a COMPLETE, STOPPED, or ABORTED state for a configured automatic update to occur.
  - The step output has read/write external access (inherited from the Equipment Phase output parameter) and the operator assigns a value.
- Sequence output parameter has not been updated yet. There are three ways the update can occur.
  - The sequence enters the COMPLETE, STOPPED, or ABORTED state, causing the sequencing parameter's expression to evaluate.
  - The operator commands the parameter expression to evaluate.
  - The output has read/write external access and the operator assigns a value.
- An expression contains a tag with an invalid quality of data.
  - Step input tags and sequencing output parameters can have a configured expression that may reference a sequencing parameter or step tag whose **Valid** member is FALSE.

If your application needs to discern data integrity, use the Quality of Data to test the validity of sequencing parameter data.

These system provided data types implement the Quality of Data concept:

- **Valid** – Specifies the validity of the contents of the sequencing parameter or step tag's **Value** member field as a BOOL: 1 = Valid and 0 = Invalid. When the **Valid** attribute is 1, then the **Value** member of the parameter or sequence is known to be correct. When it is 0, the **Value** member is not known to be correct. If the Value is known not to be valid, the invalid symbol is shown in the box.
- **InitializeAsValid** - When an Equipment Sequence is initialized, the **Valid** attribute is set to the value of the **InitializeAsValid** attribute.

The **Valid** attribute is the quality of data of the sequencing input parameter. Because these parameters may not have expressions, the **Valid** attribute is always TRUE.

See also

How sequence output parameter and step input tag expressions evaluate on page 66

How sequence parameters update on page 65

How sequence parameters update

Sequence input parameters

Sequence input parameters update by executing a configured Connection, performed by the firmware every scan. Then by directly assigning a value using Logix Designer or the **Sequence Parameter Control**, depending on the configured **External Access** value. Then a sequence's tags are initialized by moving the **Initial Value** attribute value into the **Value** attribute, by using either the START or RESET command in Logix Designer or the **Initialize Parameters** command in Logix Designer or the **Sequence Parameter Control**.

Sequence Output Parameters update

Sequence output parameters update by directly assigning a value using Logix Designer or the **Sequence Parameter Control**, depending on the configured **External Access** value. Then a sequence's tags are initialized by moving the **Initial Value** attribute value into the **Value** attribute, by using either the START or RESET command in Logix Designer or the **Initialize Parameters** command in Logix Designer or the **Sequence Parameter Control**. The associated Equipment Phase output parameter value is loaded when the phase is configured to update to the state to change to a terminal state (COMPLETE, STOPPED, or ABORTED). The sequence output parameter's expression must be enabled to update the **Value** attribute after evaluation.

How sequence output parameter and step input tag expressions evaluate

Step tag input expressions evaluate at the beginning of each scan, sequence output parameter expressions evaluate when the sequence enters a terminal (STOPPED, ABORTED, COMPLETE) state. Step tag input expression and sequence output parameter expressions can be commanded to evaluate using the Force Expression Evaluation command.

How step tags update

Step input tags

Step input tags update by directly assigning a value using Logix Designer or the **Sequence Parameter Control**, depending on the configured **External Access** value. Then a sequence's tags are initialized by moving the **Initial Value** attribute value into the **Value** attribute, by using either the START or RESET command in Logix Designer or the **Initialize Parameters** command in Logix Designer or the **Sequence Parameter Control**. The configured parameter expression is evaluated on each scan. The step input tag's expression must be enabled for evaluation to update the **Value** attribute.

Step output tags

Step output tags update by directly assigning a value using Logix Designer or the **Sequence Parameter Control**, depending on the configured **External Access** value. Then a sequence's tags are initialized by moving the **Initial Value** attribute value into the **Value** attribute, by using either the START or RESET command in Logix Designer or the **Initialize Parameters** command in Logix Designer or the **Sequence Parameter Control**. Then the associated Equipment Phase output parameter value is loaded when one of the following occurs:

- The phase is configured to update the state to change to a terminal state (COMPLETE, STOPPED, or ABORTED)
- The scanning Equipment Phase routine executes a Equipment Phase External Request (PXRQ) instruction requesting the output parameter value be copied to the step output tag.

See also

Sequence Parameters Control on page 93

Pause, auto pause, and resume commands

Use the **Pause** and **Auto Pause** buttons to test and troubleshoot Equipment Sequence or Equipment Sequence step execution.

The **Pause** and **Auto Pause** button commands:

- The Equipment Sequence to pause execution of the sequence when active transition expressions evaluate TRUE.
- The Equipment Sequence step and its associated phase to enable pausing when a PPD instruction is executed.

When the **Pause** and **Auto Pause** buttons are toggled on, the button background is a light blue with a dark blue outline.

The **Resume** button commands:

- The Equipment Sequence to resume execution of the sequence.
- The Equipment Sequence step and its associated phase to resume execution.

See also

Change modes effect on sequence and step commands on page 70

Ownership

Ownership is having the right to command an Equipment Sequence or an Equipment Phase.

Both Equipment Sequences and Equipment Phases must be *owned* to be commanded. The ownership commands are **Attach** (SATT) and **Detach** (SDET).

Internal sequencers (programs), external sequencers (FactoryTalk Batch), and operators always use an **Attach** instruction to command an Equipment Sequence. Logix Designer always uses an **Override** (SOVR) instruction to command an Equipment Sequence. A program might successfully attach an Equipment Sequence but be unable to command it because Logix Designer has overridden ownership.

The ownership override commands are:

- **Attach:** Operators, internal sequencers, and external sequencers attach to an Equipment Sequence or Equipment Phase to control it.
- **Override**: A Logix Designer application always takes ownership of an Equipment Sequence or Equipment Phase by overriding an existing **Attach**.
- **Detach:** Operators, internal sequencers, external sequencers, and Logix Designer **Detach** to release the right to control the Equipment Sequence or Equipment Phase.

If the Equipment Sequence is attached by another sequencer, an external sequencer, or an operator, an **Override** takes precedence without waiting for other owners to release the Equipment Sequence. Any existing attachment remains and resumes control once the **Override** is gone.

If the Equipment Phase is attached by an Equipment Sequence, an **Override** interrupts the Equipment Sequence's ability to coordinate the Equipment Phase. This is a sequencing failure condition and the Equipment Sequence is HELD.

Only one attachment is allowed on an Equipment Phase or Equipment Sequence. If the Equipment Phase or Equipment Sequence is not already attached to, attaching will grant the attaching sequencer ownership (and commanding privilege). If the Equipment Phase or Equipment Sequence is already attached to, then other potential owners trying to attach to the same Equipment Phase or Equipment Sequence fail.

Ownership types

Ownership types are the ways a sequence or phase may be owned--enabling the owner to command them. Each ownership type is stored independently on the phase or sequence so one type of ownership does not remove another.

Relative Priority	Ownership Type	# Allowed	Description
First	Logix Designer Override	Up to 15	Logix Designer application always takes ownership by overriding all other potential users. Up to 15 different Logix Designer applications may attach to a single Equipment Phase or Equipment Sequence at one time.
Second	Attach	1	A request to attach fails if the Equipment Sequence or Equipment Phase is already attached.

Ownership user types

There are four user types: Logix Designer, External Sequencer, Internal Sequencer, and Operator. The attachment type accompanies an attach request to take ownership.

Types of users	Description	Examples
Logix Designer	A control engineer using Logix Designer overrides ownership of the Equipment Phase or Equipment Sequence.	Equipment Phase Monitor within Logix Designer Sequence Editor within Logix Designer
Internal Sequencer	A program running within a ControlLogix controller.	Programs, Equipment Sequences, Equipment Phases
Operator	An operator logged into a FactoryTalk View Site Edition display interacting with Equipment Sequence through the SequenceManager Controls. When an attachment of Operator type exists, all operator displays may command the Equipment Sequence.	Sequence Detail, Sequence Summary
External Sequencer	An application outside ControlLogix that interacts with sequenced objects.	FactoryTalk Batch Server

See also

Command a step or Equipment Phase using the Equipment Sequence Monitor on page 69

Command a transition using the Equipment Sequence Monitor on page 69

Command a step or Equipment Phase using the Equipment Sequence Monitor

Command an Equipment Phase through a step using the Equipment Sequence Monitor.

Before you begin:

- Go online with the controller.
- In the Equipment Sequence Monitor, open an Equipment Sequence.
- The Equipment Sequence must be in **Manual** mode.
- The step to be commanded must be active. This implies the step is attached to the Equipment Phase to be commanded. Select **Active Step Change**  to make a step active.

To command a step using the Equipment Sequence Monitor:

1. Select **Take Ownership**  to take ownership of the Equipment Sequence.
2. Select the active step to see the Equipment Sequence step command toolbar.
3. Select a command to command the equipment phase associated with the step.
4. (optional) Once commanding phases completed, select **Exit Manual**  to go back to **Automatic** mode.
5. When finished, select **Release Ownership**  .

See also

Equipment Sequences and Equipment Sequence step commands on page 32

Command a transition using the Equipment Sequence Monitor

You can force an active transition to evaluate TRUE, STOPPING and RESETTING the preceding steps while attaching and STARTING the following steps.

Before you begin:

- Go online with the controller.
- In the Equipment Sequence Monitor, open an Equipment Sequence.
- The Equipment Sequence should be running.
- The transition must be active.
- The Equipment Sequence must be in **Automatic** mode.

To command a transition using the Equipment Sequence Monitor:

1. Select  to take ownership of the Equipment Sequence.
2. Right click on the transition and select **Force Expression to True.**

See also

Overview of transition display states on page 62

Overview of transition firing states on page 63

Change modes effect on sequence and step commands

Use the change mode to toggle an Equipment Sequence between **Automatic** and **Manual** mode.

Mode effect on sequence commands

The following table shows the mode effect on sequence commands.

Command	Automatic Mode	Manual Mode
Start, Hold, Stop, Abort, Restart, Reset	Allowed	Ignored
Pause, Auto Pause, Resume	Allowed	Ignored
Clear Failures on a sequence	Allowed	Allowed
Force Transition Expression to Evaluate TRUE	Allowed	Ignored
Change Active Step	Ignored	Allowed

Mode effects on step commands

Commanding a step is the same as commanding the Equipment Phase, except it is done through the sequence. The following table shows the mode effect on step commands.

Command	Automatic Mode	Manual Mode
Start, Hold, Stop, Abort, Restart, Reset	Ignored	Allowed
Pause, Auto Pause, Resume	Ignored	Allowed
Clear Failures on a sequence	Ignored	Allowed
Force Transition Expression to Evaluate TRUE	Allowed	Allowed

See also

Equipment Sequence failures on page 71

Equipment Sequence failures

Failures originate from two sources, Equipment Phases and Equipment Sequences. An Equipment Phase generates a failure by executing a Phase Failure (PFL) instruction, maintained by the Failure attribute. The Equipment Sequence generates a failure by detecting a problem that impairs its ability to coordinate active sequence elements, maintained by the Internal Failure attribute.

A failure propagates up the hierarchy of sequence elements from the point it originated; Equipment Phases notify steps and steps notify the Equipment Sequence. Failure status is maintained at each of these layers:

- The Equipment Phase backing tag has a Failure member.
- The step backing tag has a Failure member and an Internal Failure member.
- The Equipment Sequence backing tag has a Failure member and an Internal Failure member.

A failure is considered a serious problem that warrants holding the execution of the sequence, all active elements, and any phases to which they are attached until the cause of the failure is corrected. This can occur in either Automatic or Manual mode.

Phase-generated failures

Phase-generated failures are the result of the phase logic executing a PFL instruction. The instruction includes a failure code created and managed by the user. The failure is stored on the Failure member of the phase's backing tag. The failure is detected by the step, setting the Failure member on the step's backing tag. Finally, the failure on the step is detected by the sequence, setting the Failure member on the sequence.

Sequence-generated failures

Sequence-generated failures are detected by the sequencing engine as it executes. The failure is detected by the step and is stored on the Internal Failure member of the step's backing tag. That failure is detected by the step, setting the Internal Failure member on its backing tag.

Clear failures

The Clear Failures command resets the failure and internal failure members of the sequence and step backing tags. If a phase failure is being cleared, the **Clear Failures** command is forwarded to the phase. Sequences, like phases, cannot be restarted until all their failures are cleared. Note that if the cause of the failure has not been resolved, the next scan of the Equipment Sequence engine will likely regenerate the failure.

You need to do the following sequence of actions in order to recover from an Equipment Sequence failure:

- Correct the cause of the failure.
- Clear the failure status from the sequence, step, and phase involved in the failure.
- Restart the sequence.

See also

Change modes effect on sequence and step commands on page 70

SequenceManager event handling applications

The event handling components are split between the controller and a supporting PC. The sequence program, running in the firmware of the controller, generates events. An external workstation hosts the SequenceManager Event Client Service, which subscribes to SequenceManager events and writes them to a raw event data file. The SequenceManager Event Archiving Service converts the raw events data into readable form, writes the data to an .EVT file, and populates tables in a database for PlantPAx reporting.

SequenceManager Event Console

The Equipment Sequence Manager Event Services Console provides the user interface for performing the following tasks:

- Start and stop the Equipment Sequence Manager Event Client Service and the Equipment Sequence Manager Event Archiving Service.
- Display the status of Equipment Sequence Manager Event Client Service and the Equipment Sequence Manager Event Archiving Service.
- Configure the Equipment Sequence Manager Event Client Service Settings and Sequence Manager Event Archiving Service Settings.

SequenceManager Event Client

The SequenceManager Event Client receives events from multiple controllers. Each event received is written directly to a raw event file.

SequenceManager Event Archiving Service

SequenceManager Event Archiving Service is responsible for reading events from the raw event file. Each event is translated and localized into readable strings, then the data is stored into sequence specific event files (.EVT files). Another option is for data to be stored into the BatchHistoryEx data table in the SQL Server for PlantPAx event data handling.

See also

SequenceManager and related components overview on page 13

SequenceManager events

SequenceManager events record status changes, processing actions, and user interactions as the Equipment Sequence executes. These events have importance at runtime because they indicate the current status of various aspects of a manufacturing process and have historical importance because the data is a record of exactly what transpired.

The three event types recorded by the SequenceManager are:

- Sequence Command Events record commands to change state, change pause state, change sequence mode, change ownership, clear failures, change active step, override transition expression, and enable and disable sequence tag expressions.
- Process Data Update Events record the value of system values updating, including the state, pause, mode, ownership, and failure.
- Parameter Update Events record changes in value or status of sequence parameters and step tags, including operator updates to parameters and step tag values, operators changing the status of sequence parameter or step tag expressions, phase updates to step tag values, and phase requests for step tag data.

Keep the following considerations in mind when using SequenceManager events:

- Equipment Phases and Equipment Sequences should be run in a periodic task.
- Equipment Sequence programs can be in the same periodic task as the Equipment Phase programs, or in separate tasks.
- Generating events affects the performance of an Equipment Sequence. Only generate events when records for executing the sequence are required.
- Avoid generating more than 60 events and alarms combined per second.
- Configure sets of sequence parameters and step tags to not exceed the memory capacity of the controller.
- Equipment Phases can execute faster than an Equipment Sequence can record events.

  An Equipment Sequence coordinates Equipment Phases that run in fractions of a second. But, the firmware event generation systems cannot keep up. When it is important to reliably record events, it is best that the phase takes at least 10 seconds to run to completion.
- When steps are started and completed, use automatic storing of input and output data. A phase executing PXRQ instructions to read input or

write outputs from or to an Equipment Sequence faster than every 10 seconds may lose events.

The benchmark of a fast Equipment Sequence program is tested as:

- 18 Steps with three parallel paths of simultaneous execution
- 225 Parameters
- Generating 334 events
- For a sequence running 60 seconds
- For an ES completing in approximately 60 seconds

With this phase and sequence configuration, events are not lost when burst of alarms are processed.
The benchmark is primarily for testing how fast Equipment Sequence can run without losing events. The execution speed of a sequence depends upon the execution speed of the Equipment Phases. Phases that complete their execution in less than 10 seconds may lose events depending upon the number of alarms being generated.

- Equipment Phases can be configured to get Input Parameters when they start and to store Output Parameters when they complete. This is the most efficient way to move data between an Equipment Sequence> and an Equipment Phase.

Important:	When **Generate Events** is enabled, the Logix Designer application checks that there is enough memory to generate the Sequence Parameter and Step Tag value events. The checks occur when the sequence program is verified, when a sequence program is imported and exported as a component, and when the controller is online and the sequence program's **Generate Events** attribute is enabled. If the amount of memory required is not available, the sequence does not verify, generates an import error, and the import is not allowed or the **Generate Events** attribute is not enabled, respectively.

See also

SequenceManager and related components overview on page 13

Configure Microsoft SQL Server for Reporting Services for SequenceManager Events

Reporting within SequenceManager Events requires the setup of Reporting Services.

To configure the Microsoft SQL Server for Reporting Services for SequenceManager Events:

1. Open **Reporting Services Configuration Manager**.
2. At the prompt, select **Connect**. The **Reporting Services Configuration Manager** opens.
3. Select **Report Manager URL**.

4. Select the **URLs** link to open the **Home - Report Manager** page in a web browser. If the link is not active, select **Apply** to activate the link.

   If this is the first time the **Report Manager** page is accessed, warning messages may appear. To continue, select **Close** for any warning.

5. On the **Home - Report Manager** page, select **Folder Settings**.
6. On the **Security** page, select **New Role Assignment**.
7. On the **New Role Assignment** page:

a. In the **Group or user name box**, enter the **domain\user name** that was used when installing SQL Server.

   b. Select the **Role** check box to select all of the roles.

   c. Select **OK**.

The new role is added to the list on the SQL Server Security page.

The SequenceManager Controls

The SequenceManager sequences a series of Equipment Phases to the Control Logix platform. The operator views and interacts with the Equipment Sequences downloaded to a Logix controller through three types of controls:

- Sequence Detail Control

  The **Sequence Detail Control** provides the operator with a detailed view of an Equipment Sequence, including its chart structure, steps, and transitions. The runtime status of the sequence program and its sequence elements are also shown. The operator can command the Equipment Sequence from this control.

- Sequence Summary Control

  The **Sequence Summary Control** displays the sequence program status for each of the Equipment Sequences downloaded to the controller. The **Sequence Summary Control** also allows the operator to view and command a selected Equipment Sequence.

- Sequence Parameters Control

  The **Sequence Parameters Control** displays a table of all sequencing parameters and step tags of a specified Equipment Sequence, and allows the operator to command a selected sequencing parameter or step tag. To refine the display, configure the table to filter the information displayed.

See also

Sequence Detail Control on page 85

Sequence Summary Control on page 79

Sequence Parameters Control on page 93

Sequence Summary Control

Use the Sequence Summary Control to see status information for the Equipment Sequences downloaded to a controller. You can select a sequence in the list and command it.

To open the Sequence Summary Control:

1. On the **Start** menu, choose:
   Rockwell Software > FactoryTalk View > FactoryTalk View Site Edition Client.
2. Click **Sequence Summary Control**.

See also

Command an Equipment Sequence using the Sequence Summary controls on page 84

Sequence Summary command controls on page 81

Sequence Summary Control columns in table area on page 82

Settings and status in the Control footer on page 83

Configure the Sequence Control to communicate with a controller on page 79

Configure the Sequence Summary Control

Configure the **Sequence Summary Control** to communicate with a controller or to use VBA by customizing settings in the **Property Panel** for the control. There is also the option to customize display options.

Before you begin:

- Open the FactoryTalk View Site Edition (SE) application.
- Open a display that contains the **Sequence Summary Control**.

See also

Configure the Sequence Summary Control to communicate with a controller on page 80

Configure the Sequence Summary Control display options on page 80

Configure the Sequence Summary Control to use VBA on page 81

Sequence Parameters Control on page 93

Sequence Parameters Control property settings on page 96

Configure the Sequence Summary Control to communicate with a controller

Configure the Sequence Summary Control to communicate with a controller.

To configure the Sequence Summary Control to communicate with a controller:

1. In the display window, right click the **Sequence Summary Control**.
2. Select **Property Panel**.
3. Select **Connections** tab.
4. In the **ControllerPath** property text box, enter the path to the controller.

   For example: AB_ETH-1\99.99.99.99\Backplane\0
5. In the **ControllerShortcut** property text box, enter the RSLinx Enterprise device shortcut name to the controller.
6. In the **DataServerPath** property text box, enter the FactoryTalk path to the RSLinx Enterprise Data Server.

   For example: RNA://$Local/MyProject/
7. In the **SeqMgrServerPortNumber** property text box, enter the port number that was defined during the installation of the server.
8. Close the **Property Panel** window.
9. Select **Save**.

See also

Configure the Sequence Summary Control display options on page 80

Configure the Sequence Summary Control display options

Configure the Sequence Summary Control by customizing display options.

To configure the Sequence Summary Control display options:

1. Right click the **Sequence Summary Control** in the display window.
2. Select **Property Panel**.
3. Select display options.
   - (optional) In the **Column1Content** property text box, select a content option for the column.
   - (optional) In the **Column2Content** property text box, select a content option for the column.
   - (optional) In the **Column3Content** property text box, select a content option for the column.
   - (optional) In the **Column4Content** property text box, select a content option for the column.

- (optional) In the **Column5Content** property text box, select a content option for the column.
- (optional) In the **Column6Content** property text box, select a content option for the column.
- (optional) In the **Column7Content** property text box, select a content option for the column.
- (optional) In the **CommandButtonLocation** property text box, choose the location.
- (optional) In the **ShowCommandButtons** property text box, select **True** to display the command buttons.
- (optional) In the **ShowStatusBar** property text box, select **True** to display the status bar.
- (optional) In the **TouchPointerSize** property text box, select an option to auto-size, decrease, or increase the size of buttons.

4. Close the **Property Panel** window.
5. Click **Save**.

See also

Configure the Sequence Summary Control to communicate with a controller on page 80

Configure the Sequence Summary Control to use VBA on page 81

Configure the Sequence Summary Control to use VBA

Configure the Sequence Summary Control to use VBA.

To configure the Sequence Summary Control to use VBA:

1. In the display window, right click the **Sequence Summary Control**.
2. Select **Property Panel**.
3. In the **ExposeToVBA** property text box, select **VBA Control** to allow the Sequence Detail Control to use VBA for scripting.
4. Close the **Property Panel** window.
5. Click **Save**.

See also

Configure the Sequence Summary Control to communicate with a controller on page 80

Configure the Sequence Summary Control display options on page 80

Sequence Summary command controls

Use the following commands to control an Equipment Sequence using the Sequence Summary Control. The availability of some commands depends on the selected Equipment Sequence owner, state, mode, and failure status. Click **More** to display all the commands on the toolbar.

Icon	Command	Description
	Take Ownership	Take ownership of the Equipment Sequence. Taking ownership means that this application now has the right to command this Equipment Sequence; other internal sequencers, external sequencers, and operators are not allowed to command this sequence. The Logix Designer application can override ownership.
	Release Ownership	Release ownership of the Equipment Sequence. Releasing ownership makes the sequence available to internal sequencers, external sequencers, and operators for attachment.
	Set ID	Opens the **Set Sequence ID** dialog box where you can assign an identifier to the Equipment Sequence. This command is enabled only when an Equipment Sequence is idle.
	Start	Start execution of the Equipment Sequence.
	Hold	Halt all attached phases for the Equipment Sequence and stop evaluating transitions until the Equipment Phase runs its HOLDING routine.
	Restart	Resume execution of the Equipment Sequence from the HELD state.
	Stop	Stop all attached phases and active transitions for the Equipment Sequence. Any attached Equipment Phases run their STOPPING routines.
	Abort	Abort all attached phases and active transitions for the Equipment Sequence. Any attached Equipment Phases run their ABORTING routines.
	Reset	Reset any remaining active phases for the Equipment Sequence.
	Clear Failures	Clear the failure flags on the Equipment Sequence.
	Pause	Pause execution of the Equipment Sequence. When the active transition evaluates TRUE, it does not transition to the FIRING state until you click **Resume**. The **Resume** command resets the **Pause** flag so the sequence will continue execution uninterrupted.
	Auto-Pause	Automatically pause the Equipment Sequence as transitions evaluate TRUE. The **Resume** command resets the **Pause** flag. The **Auto-Pause** flag immediately causes the **Pause** flag to be turned on again, so the sequence pauses when the next transition expression evaluates TRUE.
	Resume	Continue execution of the Equipment Sequence.
	Automatic	Put the Equipment Sequence in **Automatic** mode, which allows the sequencing engine to automatically fire transitions and execute the Equipment Sequence.
	Manual	Put the Equipment Sequence in **Manual** mode, in which the sequencing engine does not automatically fire transitions, and an operator commands the Equipment Sequence step by step. On the toolbar, only the **Release Ownership**, **Pause**, **Auto-Pause**, and **Automatic** commands are enabled.

See also

Sequence Summary Control on page 79

Command an Equipment Sequence using the Sequence Summary controls on page 84

Sequence Summary Control columns in table area

The following columns are displayed in the Equipment Sequence list in the table area of the Sequence Summary Control. The list can be sorted in alphabetical order for any column to group Equipment Sequences based on status.

Status column	Description
Sequence Name	The Equipment Sequence name.

ID	The identifier assigned to the Equipment Sequence before it runs. This field is editable when the sequence is inactive, or in the IDLE state. When the sequence is active, the ID field is locked.
State	The current execution state of the Equipment Sequence. Possible states include NOT CONNECTED, IDLE, RESTARTING, RUNNING, RESETTING, HOLDING, STOPPING, ABORTING, HELD, STOPPED, ABORTED, and COMPLETE.
Mode	The operational mode for the Equipment Sequence, either **Automatic**, in which sequence steps advance automatically, or **Manual**, in which the operator advances sequence steps manually.
Phase Failure	Indicates a failure in an Equipment Phase associated with the sequence.
Sequence Failure	Indicates a failure in the Equipment Sequence.
Owners	The current owner of the Equipment Sequence.
Unit ID	A numerical representation of the piece of equipment that the Equipment Sequence is controlling.

See also

Sequence Summary Control on page 79

Settings and status in the Control footer

The footer section on the Sequence Control contains the following settings and status indicators.

The communication, failure, and unscheduled/inhibited icons are also displayed in the upper left corner of the diagram window, in the status bar, and on any step or tag the status is detected.

Setting or status	Description
Zoom control	Adjusts the zoom on the control window.
Auto-Scroll	Turn Auto-Scroll on or off.
Sequence name	The name of the Equipment Sequence.
Status bar	Displays the following status icons:  – There is a communication problem with the controller, the web server, the live data server, or the tags.  – No known communication problem.  – There is a failure in the Equipment Sequence.  – No known failure in the Equipment Sequence.  – The controller is in Program, Remote Program, or an unknown mode.  – The controller is in Run, Remote Run, or an unknown mode.  – The Equipment Sequence or task is inhibited, or the Equipment Sequence is unscheduled.  – The Equipment Sequence is scanning, or the status is unknown.

See also

Sequence Summary Control on page 79

Sequence Parameters Control on page 93

Sequence Detail Control on page 85

Command an Equipment Sequence using the Sequence Summary Control

Use the commands on the Sequence Summary Control to send commands to an Equipment Sequence.

To command an Equipment Sequence using the Sequence Summary controls:

1. Select an Equipment Sequence in the list.
2. Click **Take Ownership** .
3. Click the command buttons to command the Equipment Sequence.
4. When finished, click **Release Ownership** .

See also

Sequence Summary Control on page 79

Sequence Summary command controls on page 81

Sequence Detail Control

Use the Sequence Detail Control to see a detailed view of an Equipment Sequence, including its chart structure, steps, and transitions. You can also view the runtime status of the Equipment Sequence and the sequence elements.

To open the Sequence Detail Control:

1. On the **Start** menu, choose:
   Rockwell Software > FactoryTalk View > FactoryTalk View Site Edition Client.
2. Click **Sequence Detail Control**.

See also

Overview of the Sequence Detail Control status header area on page 89

Monitor a transition in the Sequence Detail Control on page 92

Monitor a step in the Sequence Detail Control on page 90

Configure the Sequence Detail Control

Configure the **Sequence Detail Control** to communicate with a controller or to use VBA by customizing settings in the **Property Panel** for the control. There is also the option to customize display options.

Before you begin:

- Open the FactoryTalk View SE application.
- Open a display that contains the **Sequence Detail Control**.

See also

Configure the Sequence Detail Control to communicate with a controller on page 86

Configure the Sequence Detail Control display options on page 86

Configure the Sequence Detail Control to use VBA on page 87

Sequence Detail Control command controls on page 87

Configure the Sequence Detail Control to communicate with a controller

Configure the Sequence Detail Control to communicate with a controller.

To configure the Sequence Detail Control to communicate with a controller:

1. In the display window, right click the **Sequence Detail Control**.
2. Select **Property Panel**.
3. In the **ControllerPath** property text box, enter the path for the controller.
4. In the **ControllerShortcut** property text box, enter the RSLinx Enterprise device shortcut name to the controller.
5. In the **DataServerPath** property text box, enter the FactoryTalk path to the RSLinx Enterprise data server.
6. In the **SequenceName** property text box, enter the name of the Equipment Sequence.
7. In the **SeqMgrServerPortNumber** property text box, enter the port number that was defined during the installation of the server.
8. Close the **Property Panel** window.
9. Click **Save**.

See also

Configure the Sequence Detail Control display options on page 86

Configure the Sequence Detail Control to use VBA on page 87

Configure the Sequence Detail Control display options

Configure the Sequence Detail Control display options.

To configure the Sequence Detail Control display options:

1. In the display window, right click the **Sequence Detail Control**.
2. Select **Property Panel**.
3. (optional) In the **AutoScroll** property text box, select **True**.
4. (optional) In the **CommandButtonLocation** property text box, choose the location for the Equipment Sequence command buttons.
5. (optional) In the **ShowCommandButtons** property text box, select **True** to display the command buttons.
6. (optional) In the **ShowStatusBar** property text box, select **True** to display the status bar.
7. (optional) In the **TouchPointerSize** property text box, select an option to auto-size, decrease, or increase the size of buttons.
8. Close the **Property Panel** window.
9. Click **Save**.

See also

Configure the Sequence Detail Control to communicate with a controller on page 86

Configure the Sequence Detail Control to use VBA on page 87

Configure the Sequence Detail Control to use VBA

Configure the Sequence Detail Control to use VBA.

To configure the Sequence Detail Control to use VBA:

1. In the display window, right click the **Sequence Detail Control**.
2. Select **Property Panel**.
3. In the **ExposeToVBA** property text box, select **VBA Control** to allow the **Sequence Detail Control** to use VBA for scripting.
4. Close the **Property Panel** window.
5. Click **Save**.

See also

Configure the Sequence Detail Control to communicate with a controller on page 86

Configure the Sequence Detail Control display options on page 86

Sequence Detail Control command controls

Use the following commands to control an Equipment Sequence using the Sequence Detail Control. The availability of some commands depends on the selected Equipment Sequence owner, state, mode, and failure status. Click **More** to display all the commands on the toolbar.

The following commands are always displayed:

- Take/Release ownership
- Set ID
- Initialize parameters
- Start
- Hold
- Restart
- Stop
- Abort
- Reset
- More/Less

These commands are available after selecting the **More** button and can be hidden by selecting the **Less** button:

- Clear Failures
- Pause/Cancel Pause
- Auto Pause/Cancel Auto Pause
- Resume
- Enter/Exit Manual
- Step change
- Force transition

Icon	Command	Description
	Take Ownership	Take ownership of the Equipment Sequence. Taking ownership means that this application now has the right to command this Equipment Sequence; other internal sequencers, external sequencers, and operators are not allowed to command this sequence.
	Release Ownership	Release ownership of the Equipment Sequence. Releasing ownership means that internal sequencers, external sequencers, and operators with attachments are allowed to command this sequence.
	Set ID	Opens the **Set Sequence ID** dialog box where you can assign an identifier of up to 82 characters to the Equipment Sequence. This command is enabled only when an Equipment Sequence is idle.
	Start	Start execution of the Equipment Sequence.
	Hold	Halt all connected phases for the Equipment Sequence and stop evaluating transitions until the Equipment Phase runs its Hold routine.
	Restart	Resume execution of the Equipment Sequence from the HELD state.
	Stop	Stop all connected phases and active transitions for the Equipment Sequence.
	Abort	Abort all connected phases and active transitions for the Equipment Sequence.
	Reset	Reset any remaining active phases for the Equipment Sequence.
	Clear Failures	Clear the failure flags on the Equipment Sequence.
	Pause	Pause execution of the Equipment Sequence. When the active transition evaluates TRUE, it does not transition to the FIRING state until you click **Resume**.
	Auto-Pause	Automatically pause the Equipment Sequence as transitions evaluate TRUE. When you click **Resume**, the next transitions fire, but the Equipment Sequence pauses again after each transition evaluates TRUE.
	Resume	Continue execution of the Equipment Sequence.
	Enter Manual	Put the Equipment Sequence in **Manual** mode, in which the sequencing engine does not automatically fire transitions, and an operator commands the Equipment Sequence step by step. On the toolbar, only the **Release Ownership**, **Pause**, **Auto-Pause**, and **Automatic** commands are enabled.
	Exit Manual	Put the Equipment Sequence in **Automatic** mode, which allows the sequencing engine to automatically fire transitions and execute the Equipment Sequence.

See also

Sequence Detail Control on page 85

Overview of the Sequence Detail Control status header area

The header area of the Sequence Detail Control shows live data values for the currently loaded Equipment Sequence.

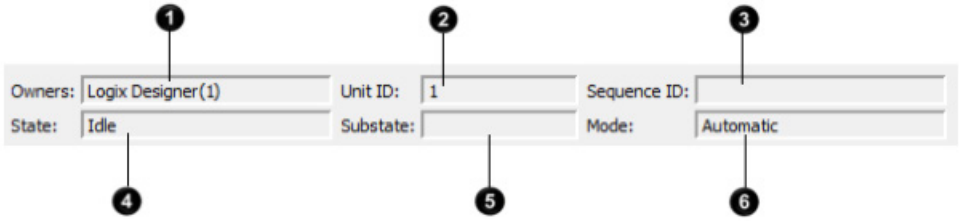

Item	Name	Description
1	Owners	This box shows the current owner of the displayed Equipment Sequence and visual indication of ownership overrides. • Blank: No ownership. • Logix Designer (<number>): The <number> indicates the number of Logix Designer applications that have overridden ownership of the sequence. • Operator: A user through the Sequence Manager Detail of the Sequence Manager Summary ActiveX controls has attached to the sequence. • Internal Sequencer: A program running within the controller has used the Attach to Equipment Sequence (SATT) command to attach to the sequence. • External Sequencer: An application outside the controller, the FactoryTalk Batch Server, has attached to the sequence.
2	Unit ID	Indicates the integer value currently assigned to the sequence. Configured on the **Sequence Properties Dialog Box**, **Configuration** tab, that represents the equipment unit the sequence is coordinating.
3	Sequence ID	A string entered by the operator or control engineer using the **Set ID** button to specify an identifier for this execution of the equipment sequence. Once the sequence is executing (not in an IDLE state), the Sequence ID cannot be changed.
4	State	Shows the current state of the displayed Equipment Sequence. States are: • IDLE • RESTARTING • RUNNING • RESETTING • HOLDING • STOPPING • ABORTING • HELD • STOPPED • ABORTED • COMPLETE

Item	Name	Description
5	Substate	Displays the state of the bits in Pause Control. The following states are: • Paused • Pause Enabled • Auto Pause Enabled • Paused, Auto Pause Enabled
6	Mode	Shows the current execution mode of the displayed Equipment Sequence, either **Automatic** or **Manual**.

Overview of the Sequence Detail Control status footer area

The footer section on the Sequence Detail Control contains the following settings and status indicators.

The communication, failure, and unscheduled/inhibited icons are also displayed in the upper left corner of the diagram window, in the status bar, and on any step or tag the status is detected.

Setting or status	Description
Zoom control	Adjusts the zoom on the control window.
Auto-Scroll	Turn Auto-Scroll on or off.
Sequence name	The name of the Equipment Sequence.
Status bar	Displays the following status icons: – There is a communication problem with the controller, the web server, the live data server, or the tags. – No known communication problem. – There is a failure in the Equipment Sequence. – No known failure in the Equipment Sequence. – The controller is in Program, Remote Program, or an unknown mode. – The controller is in Run, Remote Run, or an unknown mode. – The Equipment Sequence or task is inhibited, or the Equipment Sequence is unscheduled. – The Equipment Sequence is scanning, or the status is unknown.

See also

Sequence Detail Control on page 85

Monitor a step in the Sequence Detail Control

A monitored equipment sequence step shows several functions:

- The user-configured step name and the Equipment Phase name.
- The step execution state.
- If the step is a source or target for a transfer of control.

- If the step has a failure.
- The step is executing.
- If the step or associated phase is paused.

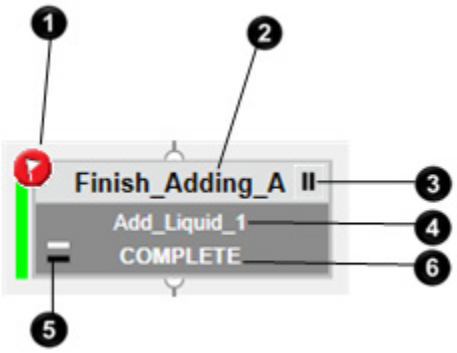

	Item	Description
1	**Failure**	Phase failure - generated by the Equipment Phase Failure (PFL) instruction in the Equipment Phase logic. Internal failure - the sequencing engine has encountered a problem with the Equipment Sequence.
2	**Step Name**	The name of the step as configured during creation of the Equipment Sequence.
3	**Pause status**	The symbol shows that: • A pause of the phase logic is pending. • An auto-pause of the phase logic is pending. • The associated Equipment Phase is paused. • The associated Equipment Phase is paused and auto-pause is pending.
4	**Equipment Phase Name**	Each step is configured to reference one phase. The name of the phase is displayed so you know which equipment phase is executing.
5	**Transfer of Control (TOC)**	A step that has been configured as the source to transfer ownership to a following target step, without stopping the execution of the phase. The symbol shows: • When the top bar is filled, this step is the beginning of a TOC step pair. • When the bottom bar is filled, this step is the end of a TOC step pair. • When both top and bottom bars are filled, this step is the end of a TOC step pair and the beginning of another TOC step pair. When transfer of control is not configured, the symbols are not drawn.
6	**Step State**	When a step is active, and attached to its phase, the step state mirrors the state of the phase. The set of displayed states are: INACTIVE, NOT CONNECTED (active but not attached), IDLE, RESTARTING, RUNNING, RESETTING, HOLDING, STOPPING, ABORTING, HELD, STOPPED, ABORTED, and COMPLETE. **Tip:** <No phase> steps have no associated phase and only have two displayed states: RUNNING and IDLE. The step state is also represented by the color of the step.

Monitor a transition in the Sequence Detail Control

A transition has several displayed attributes and status. The transition name and expression are defined when the sequence is configured and static when the sequence is online. The display state and firing attribute are dynamic and update as the transition executes.

	Item	Description
1	**Transition Name**	The name of the transition is assigned by the Equipment Sequence Editor. It is an incremented value beginning with Tran_000.
2	**Transition Display State**	The transition display state is indicated by the color of the transition. For more information about transition display states, see **Transition display states**.
3	**Transition Expression**	Transition expressions define the criteria to STOP, RESET, and detach all preceding steps and their associated Equipment Phases and attach and START the Equipment Phases and steps. The expression must always evaluate to either TRUE or FALSE.
4	**Transition Firing Attribute**	The Transition Firing Attribute is only displayed when the transition is in the FIRING state, which means the expression has evaluated TRUE. The firing attribute is a subset of the FIRING state and gives a visual indication of the current state.

Sequence Parameters Control

Use the Sequence Parameters Control to see a list of the step tags and sequence parameters in an Equipment Sequence. Select tags and parameters in the list to modify them or view more information about them.

To open the Sequence Parameters Control:

1. On the **Start** menu, choose:
   Rockwell Software > FactoryTalk View > FactoryTalk View Site Edition Client.
2. Click **Sequence Parameters Control**.

See also

Modify step tags or sequence parameters using the Sequence Parameters Control on page 99

Statuses in the Control footer on page 83

Configure the Sequence Parameters Control

Configure the **Sequence Parameters Control** to communicate with a controller or to use VBA by customizing settings in the **Property Panel** for the control.

Before you begin:

- Open the FactoryTalk View Site Edition (SE) application.
- Open a display that contains the **Sequence Parameters Control**.

See also

Configure the Sequence Parameters Control to communicate with a controller on page 94

Configure the Sequence Parameters Control display options on page 94

Configure the Sequence Parameters Control to use VBA on page 95

Sequence Parameters Control on page 93

Sequence Parameters Control property settings on page 96

Configure the Sequence Parameters Control to communicate with a controller

Configure the Sequence Parameters Control to communicate with a controller.

To configure the Sequence Parameters Control:

1. In the display window, right click the **Sequence Parameters Control**.
2. Select **Property Panel**.
3. In the **ControllerPath** property text box, enter the path for the controller.
4. In the **ControllerShortcut** property text box, enter the RSLinx Enterprise device shortcut name to the controller.
5. In the **DataServerPath** property text box, enter the FactoryTalk path to the RSLinx Enterprise data server.
6. In the **SequenceName** property text box, enter the name of the Equipment Sequence.
7. In the **SeqMgrServerPortNumber** property text box, enter the port number that was defined during the installation of the server.

See also

Configure the Sequence Parameters Control display options on page 94

Configure the Sequence Parameters Control to use VBA on page 95

Configure the Sequence Parameters Control display options

Configure the Sequence Parameters Control by customizing display options.

To configure the Sequence Parameters Control display options:

1. Right click the **Sequence Parameters Control** in the display window.
2. Select **Property Panel**.
3. Select display options:
   - (optional) In the **Column1Content** property text box, select a content option for the column.
   - (optional) In the **Column2Content** property text box, select a content option for the column.
   - (optional) In the **Column3Content** property text box, select a content option for the column.
   - (optional) In the **Column4Content** property text box, select a content option for the column.
   - (optional) In the **Column5Content** property text box, select a content option for the column.

- (optional) In the **Column6Content** property text box, select a content option for the column.
- (optional) In the **Column7Content** property text box, select a content option for the column.
- (optional) In the **Column8Content** property text box, select a content option for the column.
- (optional) In the **CurrentFilter** property text box, select an option to filter the display to Sequence Parameters, step tags, selected steps, active steps, or all.
- (optional) In the **ShowFilter** property text box, select **True** to display the filter control.
- (optional) In the **ShowSequenceHeader** property text box, select **True** to display the sequence header.
- (optional) In the **ShowStatusBar** property text box, select **True** to display the status bar.
- (optional) In the **SortField** property text box, select an option to sort by that field.
- (optional) In the **SortOrder** property text box, select an option to sort ascending or descending.
- (optional) In the **TouchPointerSize** property text box, select an option to auto-size, decrease, or increase the size of buttons.

4. Close the **Property Panel** window.
5. Select **Save**.

See also

Configure the Sequence Parameters Control to communicate with a controller on page 94

Configure the Sequence Parameters Control to use VBA on page 95

Configure the Sequence Parameters Control to use VBA

Configure the Sequence Parameters Control to use VBA.

To configure the Sequence Parameters Control to use VBA:

1. In the display window, right click the **Sequence Parameters Control**.
2. Select **Property Panel**.
3. In the **ExposeToVBA** property text box, select **VBA Control** to allow the Sequence Detail Control to use VBA for scripting.
4. Close the **Property Panel** window.
5. Click **Save**.

See also

Configure the Sequence Parameters Control to communicate with a controller on page 94

Configure the Sequence Parameters Control display options on page 94

Sequence Parameters Control property settings

The **Sequence Detail Control** has the following properties that are configurable in the Property Panel of the control in the FactoryTalk View SE application.

Property name	Description	Read only	Value type
AutoLoad	Determines if the sequence chart is loaded automatically after the FactoryTalk View SE runtime starts.	No	Boolean
Column1Content	Determines what content is displayed in Column 1.	No	• 1 – Usage • 2 – Value • 3 – Initial Value • 4 – Initialize As Valid • 5 – Expression • 6 – Data Type • 7 – Description • 8 – Engineering Unit • 9 – Not Used
Column2Content	Determines what content is displayed in Column 2.	No	• 1 – Usage • 2 – Value • 3 – Initial Value • 4 – Initialize As Valid • 5 – Expression • 6 – Data Type • 7 – Description • 8 – Engineering Unit • 9 – Not Used
Column3Content	Determines what content is displayed in Column 3.	No	• 1 – Usage • 2 – Value • 3 – Initial Value • 4 – Initialize As Valid • 5 – Expression • 6 – Data Type • 7 – Description • 8 – Engineering Unit • 9 – Not Used

Property name	Description	Read only	Value type
Column4Content	Determines what content is displayed in Column 4.	No	• 1 – Usage • 2 – Value • 3 – Initial Value • 4 – Initialize As Valid • 5 – Expression • 6 – Data Type • 7 – Description • 8 – Engineering Unit • 9 – Not Used
Column5Content	Determines what content is displayed in Column 5.	No	• 1 – Usage • 2 – Value • 3 – Initial Value • 4 – Initialize As Valid • 5 – Expression • 6 – Data Type • 7 – Description • 8 – Engineering Unit • 9 – Not Used
Column6Content	Determines what content is displayed in Column 6.	No	• 1 – Usage • 2 – Value • 3 – Initial Value • 4 – Initialize As Valid • 5 – Expression • 6 – Data Type • 7 – Description • 8 – Engineering Unit • 9 – Not Used
Column7Content	Determines what content is displayed in Column 7.	No	• 1 – Usage • 2 – Value • 3 – Initial Value • 4 – Initialize As Valid • 5 – Expression • 6 – Data Type • 7 – Description • 8 – Engineering Unit • 9 – Not Used
Column8Content	Determines what content is displayed in Column 8.	No	• 1 – Usage • 2 – Value • 3 – Initial Value • 4 – Initialize As Valid • 5 – Expression • 6 – Data Type • 7 – Description • 8 – Engineering Unit • 9 – Not Used

Property name	Description	Read only	Value type
ControllerPath	Controller path of the Equipment Sequence. This path is specific to the workstation on which the Web Server is communicating with is located. Path Example: `AB_ETH-1\99.99.99.99\Backplane\0`	No	String
ControllerShortcut	RS Linx(RSLinx) Enterprise device shortcut to the controller. Default Value: MY_CONTROLLER	No	String
CurrentFilter	Determine which filter is currently being used. Default value: 0 – All	No	• 0 – All • 1 – SequencingParameters • 2 – StepTags • 3 – SelectedSteps • 4 – ActiveSteps
DataServerPath	The FactoryTalk path to the RS Linx(RSLinx) Enterprise Data Server. Example Path: `RNA://$Local/MyProject/`	No	String
IsEveryTagConnected	Displays whether every tag is connected to the ActiveX Control. Default value: True	Yes	Boolean
IsLiveDataConnected	Displays whether the live data server is connected to the ActiveX Control. Default value: False	Yes	Boolean
IsWebServerConnected	Displays whether the web server is connected to the ActiveX Control. Default value: False	Yes	Boolean
IsWebServerToControllerConnected	Displays whether the web server is connected to the controller. Default value: False	Yes	Boolean
LoadTable	Determines if the table is loaded to the window.	No	Boolean
SelectedSteps	Names of the selected steps. If multiple step names are entered, each step name must be separated by a comma from other step names.	No	String
SequenceName	Name of the Equipment Sequence that the chart loads if a load is initiated using the AutoLoad or LoadChart properties.	No	String

Property name	Description	Read only	Value type
SequenceState	Displays the state value of the displayed Equipment Sequence.	Yes	Integer
ShowFilter	Determines if the filter box is shown.	No	Boolean
ShowSequenceHeader	Determines if the sequence header is shown.	No	Boolean
ShowStatusBar	Determines if the status icons are shown.	No	Boolean
SortField	Determines which column the table is sorted on.	No	• 0 – ParameterName • 1 – ParameterUsage • 2 – ParameterExpression • 3 – ParameterDataType • 4 – ParameterDescription
SortOrder	Determines which order the table is sorted, ascending, or descending.	No	• 0 – Ascending • 1 – Descending
TouchPointerSize	Determines the size of the command buttons and the height of the fields in the header and footer areas.	No	• 1 - sqmLarge • 2 - sqmSmall
WebServerAddress	The IP address of the workstation hosting the Web Server.	No	String
WebServerPortNumber	The port number of the workstation hosting the Web Server.	No	String

See also

Configure the Sequence Parameters Control on page 93

Sequence Parameters Control on page 93

Modify step tags or sequencing parameters using the Sequence Parameters Control

Select a step tag or sequence parameter from the list on the Sequence Parameters Control to modify, disable or enable, force evaluation of, or view more information about the step tag or sequence parameter.

Tip: To modify settings for tags and parameters, the external value for the tags and parameters must be set to **Read/Write**. Use the Tag Editor in the Logix Designer application to change the external value for a tag or parameter.

To modify a tag or parameter:

1. Select the tag or parameter.
2. In the **Value** box, type the new value for the tag or parameter.
3. To disable or enable a tag or parameter, click **Expression** and then click **Disable Expression** or **Enable Expression**. The disabled icon

appears in the **Expression** box. To re-enable a disabled tag or parameter, click **Expression** and then click **Enable Expression**. The disabled icon disappears from the **Expression** box.

4. To force evaluation of a tag or parameter, click **Expression** and then click **Force Evaluation**. The **Force Evaluation** button is disabled when any of the following is true:
   - The Equipment Sequence is in the IDLE state.
   - The controller is in Program mode.
   - The Equipment Sequence or its assigned task is disabled.
   - The Equipment Sequence is unscheduled.

To view more information for a tag or parameter:

1. Select the tag or parameter.
2. Click **View Expression** to display the complete expression. Click **View Description** to display the complete description.

See also

Sequence Parameters Control on page 93

Index

Rockwell Automation support

Use these resources to access support information.

Technical Support Center	Find help with how-to videos, FAQs, chat, user forums, and product notification updates.	rok.auto/support
Knowledgebase	Access Knowledgebase articles.	rok.auto/knowledgebase
Local Technical Support Phone Numbers	Locate the telephone number for your country.	rok.auto/phonesupport
Literature Library	Find installation instructions, manuals, brochures, and technical data publications.	rok.auto/literature
Product Compatibility and Download Center (PCDC)	Get help determining how products interact, check features and capabilities, and find associated firmware.	rok.auto/pcdc

Documentation feedback

Your comments help us serve your documentation needs better. If you have any suggestions on how to improve our content, complete the form at rok.auto/docfeedback.

Waste Electrical and Electronic Equipment (WEEE)

At the end of life, this equipment should be collected separately from any unsorted municipal waste.

Rockwell Automation maintains current product environmental information on its website at rok.auto/pec.

Allen-Bradley, expanding human possibility, Logix, Rockwell Automation, and Rockwell Software are trademarks of Rockwell Automation, Inc.

EtherNet/IP is a trademark of ODVA, Inc.

Trademarks not belonging to Rockwell Automation are property of their respective companies.

Rockwell Otomayson Ticaret A.Ş. Kar Plaza İş Merkezi E Blok Kat:6 34752, İçerenköy, İstanbul, Tel: +90 (216) 5698400 EEE YÖnetmeliğine Uygundur

Connect with us.

rockwellautomation.com — expanding **human possibility**™

AMERICAS: Rockwell Automation, 1201 South Second Street, Milwaukee, WI 53204-2496 USA, Tel: (1) 414.382.2000, Fax: (1) 414.382.4444
EUROPE/MIDDLE EAST/AFRICA: Rockwell Automation NV, Pegasus Park, De Kleetlaan 12a, 1831 Diegem, Belgium, Tel: (32) 2 663 0600, Fax: (32) 2 663 0640
ASIA PACIFIC: Rockwell Automation, Level 14, Core F, Cyberport 3, 100 Cyberport Road, Hong Kong, Tel: (852) 2887 4788, Fax: (852) 2508 1846

Rockwell Automation Publication 1756-QS109D-EN-P - October 2020
Supersedes 1756-QS109C-EN-P - June 2016

Copyright © 2020 Rockwell Automation Technologies, Inc. All Rights Reserved. Printed in the U.S.A.