Programming Manual

Original Instructions

Allen-Bradley

PowerFlex DC Field Controller

Catalog Number 23PFC

Allen-Bradley • Rockwell Software

Rockwell Automation

Important User Information

Read this document and the documents listed in the additional resources section about installation, configuration, and operation of this equipment before you install, configure, operate, or maintain this product. Users are required to familiarize themselves with installation and wiring instructions in addition to requirements of all applicable codes, laws, and standards.

Activities including installation, adjustments, putting into service, use, assembly, disassembly, and maintenance are required to be carried out by suitably trained personnel in accordance with applicable code of practice.

If this equipment is used in a manner not specified by the manufacturer, the protection provided by the equipment may be impaired.

In no event will Rockwell Automation, Inc. be responsible or liable for indirect or consequential damages resulting from the use or application of this equipment.

The examples and diagrams in this manual are included solely for illustrative purposes. Because of the many variables and requirements associated with any particular installation, Rockwell Automation, Inc. cannot assume responsibility or liability for actual use based on the examples and diagrams.

No patent liability is assumed by Rockwell Automation, Inc. with respect to use of information, circuits, equipment, or software described in this manual.

Throughout this manual, when necessary, we use notes to make you aware of safety considerations.

	WARNING: Identifies information about practices or circumstances that can cause an explosion in a hazardous environment, which may lead to personal injury or death, property damage, or economic loss.
	ATTENTION: Identifies information about practices or circumstances that can lead to personal injury or death, property damage, or economic loss. Attentions help you identify a hazard, avoid a hazard, and recognize the consequence.
IMPORTANT	Identifies information that is critical for successful application and understanding of the product.

Labels may also be on or inside the equipment to provide specific precautions.

	SHOCK HAZARD: Labels may be on or inside the equipment, for example, a drive or motor, to alert people that dangerous voltage may be present.
	BURN HAZARD: Labels may be on or inside the equipment, for example, a drive or motor, to alert people that surfaces may reach dangerous temperatures.
	ARC FLASH HAZARD: Labels may be on or inside the equipment, for example, a motor control center, to alert people to potential Arc Flash. Arc Flash will cause severe injury or death. Wear proper Personal Protective Equipment (PPE). Follow ALL Regulatory requirements for safe work practices and for Personal Protective Equipment (PPE).

Appendix B

HIM Overview

Appendix C

Application Notes

Notes:

This manual provides information on how to startup, program, and troubleshoot the PowerFlex® DC Field Controller. Startup procedures are provided for a PowerFlex DC Field Controller that is used in standalone mode and when a field controller is used with a PowerFlex DC drive or PowerFlex DC Standalone Regulator. This manual excludes instructions for installation and use of the PowerFlex DC Fiber-optic Interface option module (cat. no. 20P-S5H781), used for communication between the field controller and a PowerFlex DC drive or PowerFlex DC Standalone Regulator. See the list of Additional Resources on page 8 for more information on related publications.

This manual is intended for qualified personnel. You must be able to program and operate DC drives, DC field controllers, and associated equipment. In addition, you must have an understanding of the parameter settings and functions that are detailed in this manual.

Firmware Revision

The contents of this manual pertain to PowerFlex DC Field Controller firmware revision 1.001.

You can view the current firmware revision of the field controller on the HIM (if installed) in parameter 331 [Software Version]. See the HIM Overview on page 123, for details on how to use the HIM. If a HIM is not installed, the firmware revision of the field controller is included on the data nameplate label. See the PowerFlex DC Field Controller Installation Instructions, publication 23PFC-IN001, for details.

Product Downloads

Download firmware, associated files (such as Add-on Profile, DTM, and EDS), and access product release notes from the Product Compatibility and Download Center at http://www.rockwellautomation.com/rockwellautomation/support/pcdc.page.

Additional Resources

These documents contain additional information concerning related products from Rockwell Automation.

Resource	Description
PowerFlex Digital DC Drive and Field Controller Technical Data, publication 20P-TD001	Provides detailed information on: • Basic product selection • Field controller specifications • Option specifications • Circuit protection
PowerFlex DC Field Controller Installation Instructions, publication 23PFC-IN001	Provides installation instructions for the PowerFlex DC Field Controller.
PowerFlex DC Fiber-optic Interface Option Module Installation Instructions, publication 20P-IN078	Provides installation instructions for the PowerFlex DC fiber-optic interface module.
PowerFlex Digital DC Drive - Frame A Hardware Service Manual, publication 20P-TG001	Provides hardware test procedures and spare parts replacement instructions for Frame A PowerFlex DC drives and field controllers.
PowerFlex Digital DC Drive - Frame B Hardware Service Manual, publication 20P-TG002	Provides hardware test procedures and spare parts replacement instructions for Frame B PowerFlex DC drives and field controllers.
Industrial Automation Wiring and Grounding Guidelines, publication 1770-4.1	Provides general guidelines for installing a Rockwell Automation industrial system.
Product Certifications website, http://www.rockwellautomation.com/global/certification/overview.page	Provides declarations of conformity, certificates, and other certification details.

You can view or download publications at http://www.rockwellautomation.com/global/literature-library/overview.page. To order paper copies of technical documentation, contact your local Allen-Bradley distributor or Rockwell Automation sales representative.

Startup

This chapter provides basic startup procedures for the PowerFlex® DC Field Controller.

ATTENTION: Power must be applied to the field controller to perform the following startup procedures. Some of the voltages present are at incoming line potential. To avoid electric shock hazard or damage to equipment, allow only qualified service personnel to perform the following procedure. Thoroughly read and understand the procedure before beginning. If an event does not occur while performing this procedure, **Do Not Proceed. Remove Power** including user-supplied control voltages. Correct the malfunction before continuing.

Qualified Personnel

The procedures in this section are intended for qualified personnel.

- You must understand the hazards that are associated with electromechanical equipment installations.
- You must understand and follow all applicable local, national, and/or international electrical codes.
- You must be able to program and operate DC drives, field controllers, and associated devices.
- You must have an understanding of the parameter settings and functions for both DC drives and DC field controllers.

Tools Required for Startup

You must use one of these tools to configure and start up the PowerFlex DC Field Controller:

- LCD human interface module (HIM). If you use the HIM to commission the field controller, read the HIM Overview on page 123 before performing the procedures in this chapter. If an operator interface is not available, use a remote device to start up the field controller.
- DriveExecutive™ software - You must use DriveTools™ SP version 4.01 or later, with the PowerFlex DC drive specific software patch installed. The latest version of DriveTools SP software can be downloaded from the Product Compatibility and Download Center at: https://compatibility.rockwellautomation.com/Pages/home.aspx.
- Connected Components Workbench® software, version 10 or later.

Start up a PowerFlex DC Field Controller

Complete this startup procedure for a PowerFlex DC Field Controller that is used in standalone mode or with a PowerFlex DC drive.

To complete the steps in these startup procedures, see the supporting information in these publications:

- PowerFlex DC Field Controller Installation Instructions, publication 23PFC-IN001.
- PowerFlex DC Fiber-optic Interface Option Module Installation Instructions, publication 20P-IN078
- PowerFlex Digital DC Drive User Manual, publication 20P-UM001.

Startup Sequence

This list contains the main procedures that are required to commission the field controller.

Before You Apply Power to the Controller or Drive

Complete these procedures before you apply power to the field controller or drive (if used).

Verify the Analog Input Configuration Settings

1. Remove the covers from the field controller and drive (if used).
2. Verify all switch settings for the analog inputs (S9, S10, and S11) on the main control circuit board.

Verify the Power Wiring

- Verify that the AC line power at the disconnect device is within the rated value of the device and that all power wiring is correct.

ATTENTION: Do not connect any external power to the DC output terminals, personal injury and/or equipment damage can occur.

Verify the Control and I/O Wiring

1. Verify that control power and I/O wiring is correct.
   - A digital input (1...8 only) must be wired and configured as an enable.
   - If the field controller is connected to a PowerFlex DC drive (firmware revision 7.001 or later) by using I/O, verify that the analog and digital I/O connections between the devices are correct.
2. If the field controller is used with a PowerFlex DC drive (firmware revision 7.001 or later) and the Fiber-optic Interface option module is installed in both devices, verify that the fiber-optic cable connections are correct.
3. If you are using a PTC thermistor or thermal switch to help protect the field controller from an overload condition, remove the 1 kΩ resistor between terminals 78 and 79.

Apply Power to the Device

The remainder of the startup procedures in this manual assumes the use of a HIM to configure and autotune the device.

IMPORTANT When power is first applied, the HIM can require approximately 5 seconds until commands are recognized (including the Stop key).

Apply Voltage to the Control Circuits

1. Apply power to the control circuits of the device (terminals U2 and V2).
2. If any of the digital inputs are configured to “Stop/CF” (CF = Clear Fault), “Enable” or “Aux Fault,” verify that signals are present or reconfigure parameter [Digital In*x* Sel]. If a fault code displays, see Fault Descriptions on page 93.

3. If the STS light-emitting diode on the HIM assembly is not flashing green, see Field Controller Status on page 91 for other indications.

Verify the Control Voltages

Verify that the following voltages are present at I/O terminal block 1 and 2:

Terminal Number…	Voltage	To Terminal Number…
7	+10V	9
8	-10V	9
19	24…30V	18

Load the Default Settings

It is recommended that you reset the device to the default settings. By resetting the device to the default settings, any previous parameter modifications you have made are overwritten.

1. On the HIM, from the “Main” menu scroll to the “Memory Storage” menu.
2. Press Enter.
3. Scroll to “Reset To Defaults” and press Enter.
4. A message displays to verify that you want to reset the device to the factory settings.
5. Press Enter.

A “Params Defaulted” (F48) entry is made in the device Fault Queue to indicate the change.

Configure the Most Commonly Used Parameters

If your standalone application only requires basic device parameter setup, you can use the S.M.A.R.T. list screen available on the HIM to program the field controller. See Using the S.M.A.R.T. List Screen on page 125 for more information.

IMPORTANT To access all parameters in the field controller, you must first set parameter 211 [Param Access Lvl] to 1 “Advanced” (as instructed in these steps).

1. At the Main menu, scroll to the Parameter option.
2. Press ALT and then Sel.
3. Scroll to the Numbered List option.
4. Press Enter.
5. Type 211.
6. Press Enter.

7. Press Sel.
8. Type 1.
9. Press Enter.
10. Press Esc.
11. Press ALT and then Sel.
12. Scroll to the File-Group-Par option.
13. Press Enter.
14. Scroll to the "Load Control" file.
15. Press Enter.
16. Select the "Load Data" group, and press Enter.
17. Configure the following parameters:
    - 175 [Load Rated Volt] - Enter the load nominal (rated) voltage for the field controller.
    - 179 [Load Rated Curr] - Enter the load nominal (rated) current.
18. Access the "Utility" file.
19. Press Enter.
20. Access the "Alarms" group.
21. Configure the following parameters:
    - Par 481 [UnderVolt Thresh] - Enter the value at which the field controller detects an AC under voltage condition. The default value is 100V for a 200V AC configuration, and 400V for a 500V AC configuration. Typically, this value is approximately 85% of the nominal AC line voltage.
    - Par 584 [OverCurrent Thr] - Enter the value at which an over current condition is detected (default = 175%). Set the threshold level at least 10% above the selected operating current limit (Par 7 [Current Limit]).
22. Par 585 [Overvolt Val] - Enter a value that is 10% above the maximum rated voltage, as set in Par 175 [Load Rated Volt].
23. Complete the appropriate procedures for your application:
    - For a PowerFlex DC Field Controller used in standalone mode, see Configure a Standalone PowerFlex DC Field Controller on page 14.
    - For a PowerFlex DC Field Controller connected to a PowerFlex DC drive with analog and digital I/O, see Configure Analog and Digital I/O Parameters for a PowerFlex DC Field Controller Connected to a PowerFlex DC Drive on page 16.
    - For a PowerFlex DC Field Controller connected to a PowerFlex DC drive with a Fiber-optic Interface option module, see Configure Parameters for a PowerFlex DC Field Controller Connected to a PowerFlex DC Drive with a Fiber-optic Interface Option Module on page 16.

Configure a Standalone PowerFlex DC Field Controller

Complete these steps to configure a PowerFlex DC Field Controller that is used in standalone mode.

1. Access the “Dynamic Control” file and press “Enter”.
2. Access the “Control Config” group.
3. “Set Par 241 [Vlt Cur Mode Sel] based on your application:
   - Voltage regulation = 1 “Volt Reg”
   - Current regulation = 2 “Curr Reg” (default)
4. Access the “Input / Output” file and press Enter.
5. Access the “Analog Inputs” group.
6. Configure the following:
   - If you have connected a potentiometer to analog input 1 as a reference:
     - Verify that Par 70 [Anlg In1 Sel] is set to match the regulator mode in Par 241 [Vlt Cur Mode Sel]. Par 70 = 5 “Current Ref” when Par 241 = 2 “Curr Reg”. Par 70 = 1 “Volt Ref A” when Par 241 = 1 “Volt Reg”.
     - Verify that switch S9 and Par 71 [Anlg In1 Config] are configured to match (voltage signal).
     - Set Par 72 [Anlg In1 Scale] and Par 74 [Anlg In1 Offset] appropriately.
   - If you are using the HIM on the field controller cover (Port 1) for a reference, set Par 70 [Anlg In1 Sel] to 0 “Off” (No signal).
7. Access the “Digital Inputs” group.
8. Configure the following parameters:
   - Par 1391 [ContactorControl] - If an AC contactor is used, select 1 “AC Cntcr”. In this case, an Auxiliary Status contactor must be wired to a digital input (default setting for digital input 8).
   - Par 140 [Digital In8 Sel] - If an AC contactor is NOT used, set to other than 31 “Contactor” (for example, 0 “Not Used”).
   - If an auxiliary status contactor is wired to a digital input other than digital input 8, set the appropriate [Digital In*x* Sel] parameter to 31 “Contactor”.
9. If you are using the HIM on the field controller cover (Port 1) for the reference, complete the following steps:
   - Access the “DPI Inputs” group.
   - Set Par 1323 [DPI P1 Select] to match the regulator mode in Par 241 [Vlt Cur Mode Sel]. Par 1323 = 5 “Current Ref” when Par 241 = 2 “Curr Reg”. Par 1323 = 1 “Volt Ref A” when Par 241 = 1 “Volt Reg”.

Verify Field Controller Operation

Verify that starting the field controller for the selected control mode (as set in Par 241 [Vlt Cur Mode Sel]) and changing the reference, provides the expected regulation.

For Voltage Regulation

For these steps, verify that the configured input voltage reference (value of Par 117 [Volt Reg In Pct]) is equal to the output voltage (value of Par 1009 [Volt Reg Fdbk Pct]).

1. Set the voltage reference to “0” by using the assigned source (HIM, digital input, or other source).
2. Press Start on the HIM and slowly increase the voltage reference until full voltage (100%) is reached.
3. For four quadrant field controllers, press the Direction button on the HIM and verify that the field voltage ramps down to “0” volts and then to full voltage in the opposite polarity.
4. Press Stop on the HIM and verify that the field controller ramps to “0” volts.

For Current Regulation

For these steps, verify that the configured input current reference (value of Par 39 [Current Ref]) is equal to the output current (value of Par 199 [Out Current Pct]).

1. Set the current reference to “0” by using the assigned source (HIM, digital input, or other source).
2. Press Start on the HIM and slowly increase the current reference until full load (100%) current is reached.
3. For four quadrant field controllers, change the polarity of Par 39 [Current Ref] and verify that the field current ramps down to “0” amps and then to full current in the opposite polarity.
4. Press Stop on the HIM and verify that the field controller ramps to “0” amps.

If the default gain values are not adequate for your application, see Fine Tune the Regulators on page 153.

You have completed the startup procedures for a standalone field controller.

Configure Analog and Digital I/O Parameters for a PowerFlex DC Field Controller Connected to a PowerFlex DC Drive

Complete these steps to complete the parameter configuration for a PowerFlex DC Field Controller that is connected to a PowerFlex DC drive with analog and digital I/O.

1. Access the “Dynamic Control” file and press “Enter”.
2. Access the “Control Config” group.
3. Verify that Par 241 [Vlt Cur Mode Sel] is set to 2 “Curr Reg”.
4. Access the “Input / Output” file.
5. Press Enter.
6. Access the “Analog Inputs” group.
7. Set an [Anlg In*x* Sel] parameter (70, 75, or 80) to 5 “Current Ref”. (A corresponding analog output in the connected drive must be set to 36 “Field Curr Ref”.)
8. Access the “Analog Outputs” group.
9. Set an [Anlg Out*x* Sel] parameter (66...69) to 13 “Output Curr” (default for [Anlg Out2 Sel]) or 29 “Filtered Curr”. (A corresponding analog input in the connected drive must be set to 26 “FC Fdbk”.)
10. Access the “Digital Outputs” group.
11. Configure the following parameters:
    - Set a [Digital Out*x* Sel] parameter (145...152) to 32 “Wired FC En” (A corresponding digital input in the connected drive must be set to 73 “Wired FC En”.)
    - Set a [Digital Out*x* Sel] parameter (145...152) to 33 “Wired FC Inv” (A corresponding digital input in the connected drive must be set to 74 “Wired FC Inv”.)
    - Set a [Digital Out*x* Sel] parameter (145...152) to 34 “Wired FC Act” (A corresponding digital input in the connected drive must be set to 75 “Wired FC Act”.)
12. Continue with Tune the Current Regulator on page 17.

Configure Parameters for a PowerFlex DC Field Controller Connected to a PowerFlex DC Drive with a Fiber-optic Interface Option Module

Complete these steps to complete the parameter configuration for a PowerFlex DC Field Controller that is connected to a PowerFlex DC drive with a Fiber-optic Interface option module.

1. Access the “Dynamic Control” file.
2. Press Enter.
3. Access the “Control Config” group.

4. Set Par 241 [Vlt Cur Mode Sel] to 3 “Dig Curr Reg”.
5. Continue with Tune the Current Regulator on page 17.

Tune the Current Regulator

The auto tune procedure for the current regulator calculates the best gain values for the PI regulator. The procedure can be used only when the field controller is connected to a highly inductive load.

IMPORTANT The auto tuning procedure can be interrupted before it ends by stopping the device operation or disabling the device.

Follow these steps to tune the current regulator.

1. From the HIM, access Par 452 [CurrReg Autotune] in the “Autotune” group, in the “Load Control” file, and select 1 “On.”
2. Press Enter.
3. The HIM displays “Ready for ST”.
4. Press the Start button on the HIM. While the auto tune procedure is in progress, Par 451 [Autotune Status] displays 1 “In Progress”.

The current regulator auto-tuning test starts, which could take several minutes.

- If the auto tuning procedure completes with no errors, Par 451 [Autotune Status] displays 2 “Success”.
- If the auto tune does not complete due to any event other than a device failure or user interruption, a “CurReg Tune Err” (F62) fault is generated. See the description of parameter 451 [Autotune Status] on page 34 for details on other auto tuning results.

The auto tune procedure attempts to calculate the best values of parameters 839 [CD Factor P], 840 [CD Factor I], 847 [DC Curr P], and 848 [DC Curr I], which provide a compromise between fast current dynamics and limited overshoots. Parameter 838 [CD Curr Thr] is set to 100. Parameters 849 [DC Curr P Base] and 850 [DC Curr I Base] are not changed.

If the auto tune is interrupted or an error occurs during the auto tuning procedure the PI parameters are reset to the values present before the auto tune was started, otherwise they are overwritten with the new calculated values.

The gains calculated from the auto tune procedure can cause lengthy rise times when these conditions exist:

- The nominal field current is less than half the value of the device size rating
- The field controller is started from zero current and provided a reference below 100%

If a lengthy rise time is unacceptable, make these adjustments:

- Increase the value of Par 848 [DC Curr I]

- Modify the value of Par 840 [CD Factor I] to keep the result of Par 848 x Par 840 constant

If the default gain values are not adequate for your application, see Fine Tune the Regulators on page 153.

Programming and Parameters

This chapter provides a complete list of the PowerFlex® DC Field Controller parameters. The list contains a description, default value, minimum and maximum values, units, and data type for each parameter. The parameters can be viewed and edited (programmed) using a Human Interface Module (HIM). See the Enhanced PowerFlex 7-Class Human Interface Module (HIM) User Manual, publication 20HIM-UM001, for information on using the HIM to view and edit parameters.

As an alternative, programming can also be performed using Connected Components Workbench™ software(1) and a personal computer. See Control Block Diagrams on page 103 for visual diagrams of parameter interactions.

About Parameters

To configure a field controller to operate in a specific way, certain parameters may need to be changed from the default value. Three types of parameters exist:

- **ENUM Parameters** - ENUM parameters provide a selection of two or more items. The LCD HIM will display a text message for each item.
- **Bit Parameters** - Bit parameters have individual bits associated with features or conditions. If the bit is “0”, the feature is off or the condition is false. If the bit is “1”, the feature is on or the condition is true.
- **Numeric Parameters** - These parameters have a single numerical value and unit (for example, 0.1 Volts).

The example on the following page shows how each parameter type is presented in this manual.

(1) You must use Connected Components Workbench software v10.00 or later. The software can be downloaded from http://ab.rockwellautomation.com/Programmable-Controllers/Connected-Components-Workbench-Software

Table 1 - Parameters Table Example

1	2	3	4	5		6	7
File	**Group**	**No.**	**Parameter Name & Description**	**Values**		**Data Type**	**Related**
VOLT COMMAND	Volt Regulator	108 A	**[Volt Zero Delay]** Amount of time that must elapse after the actual voltage goes below the value set in Par 107 [Volt Zero Level] before Par 395 [At Zero Volt] changes state. See Voltage Zero Function on page 150 for more information.	Default: Min/Max: Units:	100 0 / 65535 ms	16-bit Int	107, 395
VOLT COMMAND	Volt Regulator	123 A	**[Vlt Zero I En]** Enables/Disables the output of the integral section of the voltage regulator. Used in the Zero Voltage function. • "Enabled" = The output of the integral section of the voltage regulator is set to zero when the voltage reference and the voltage feedback are equal to zero. The I component is enabled when a reference value is entered to restart acceleration. • "Disabled" = The voltage regulator keeps its integral gain component when the device is at zero voltage. See Voltage Zero Function on page 150 for more information.	Default: Options:	0 = "Disable" 0 = "Disable" 1 = "Enable"	16-bit Int	
COMMUNICATIONS	Masks & Owners	591	**[Logic Mask]** Determines which ports can control the device when Par 1377 [Write Mask Act], bit 15 is set to "1." If the bit for a port is set to "0," the port will have no control functions except for stop. 0 = Control Masked, 1 = Control Permitted, x = Reserved.				1377

Options	Reserved	Reserved	Reserved	Reserved	Reserved	Reserved	Reserved	Reserved	Reserved	Reserved	DPI Port 5	DPI Port 4	DPI Port 3	DPI Port 2	DPI Port 1	Digital In
Default	x	x	x	x	x	x	x	x	x	x	0	0	0	0	1	1
Bit	15	14	13	12	11	10	9	8	7	6	5	4	3	2	1	0

No.	Description		
1	**File** – Lists the major parameter file category.		
2	**Group** – Lists the parameter group within a file.		
3	**No.** – Parameter number. A = The parameter is only accessible when Par 211 [Param Access Lvl] = 1 "Advanced". = The parameter value cannot be changed until the device is stopped.		
4	**Parameter Name & Description** – Parameter name, as it appears on an LCD HIM, and a description of the parameter function.		
5	**Values** – Defines the various operating characteristics of the parameter. Three types exist.		
	ENUM	Default:	Lists the value assigned at the factory. "Read Only" indicates that the parameter is not configurable.
		Options:	Displays the programming selections available.
	Bit	Options:	Bit name.
		Default:	Default setting.
		Bit:	Lists the bit place holder and definition for each bit.
	Numeric	Default:	Lists the value assigned at the factory. "Read Only" indicates that the parameter is not configurable.
		Min/Max:	The range (lowest and highest setting) possible for the parameter.
		Units:	Unit of measure and resolution as shown on the LCD HIM.
		Important: Some parameters will have two unit values: • For example: Analog inputs can be set for current or voltage as with Par 71 [Anlg In*x* Config].	
6	**Data Type** - Identifies the parameter data type (i.e. integer, real).		
7	**Related** – Lists parameters (if any) that interact with the selected parameter.		

How Parameters are Organized

The LCD HIM displays parameters in one of two views:

File–Group–Parameter - This organizational feature groups parameters that are used for similar functions. The parameters are organized into files. Each file is divided into groups. Each parameter is an element in a group. By default, the LCD HIM displays parameters in this view.

Numbered List - This selection lists all parameters in ascending numerical order.

See Parameter Cross Reference – by Name on page 80 and Parameter Cross Reference – by Number on page 84 for a list of parameters and page numbers.

Change the HIM Display Mode

To change the HIM display mode:

1. Access the Main Menu.
2. With the cursor on the Parameter menu selection, press ALT and Sel (View).

Change the Parameter Access Level

Use parameter 211 [Param Access Lvl] to change the display between Basic Parameter view (most commonly used parameters) or Advanced Parameter view (all parameters).

Basic Parameter View

Parameter 211 [Param Access Lvl] set to option 0 “Basic”.

File	Group	Parameters					
Monitor	**Volt Meters**	[Volt Ref A]	44	[Ramp In Pct]	111	[Volt Reg Err]	1010
		[Volt Ref A Pct]	47	[Ramp Out]	113	[Vlt Reg Err Pct]	1011
		[Volt Ref B]	48	[Ramp Out Pct]	114	[Volt Reg Fdbk]	1008
		[Volt Ref B Pct]	49	[Volt Draw Out]	1018	[Vlt Reg Fdbk Pct]	1009
		[Volt Ref Out]	385	[Vlt Draw Out Pct]	1019	[Volt Feedback]	122
		[Volt Ref Out Pct]	384	[Volt Reg In]	118	[Vlt Feedback Pct]	121
		[Ramp In]	110	[Volt Reg In Pct]	117	[Actual Voltage]	924
	Current Meters	[Vlt Reg Out Pct]	236	[Cur Lim Pos Out]	10	[Load Curr Ref]	17
		[Current Reg In]	41	[Cur Lim Neg Out]	11	[Digital Curr Ref]	862
		[Out Current]	200	[Filt Curr Pct]	928		
		[Out Current Pct]	199	[Selected CurrRef]	14		
	Device Data	[FaultCode]	57	[Output Power]	1052	[Software Version]	331
		[AC Line Voltage]	466	[Device Type]	300	[Device Checksum]	332
		[AC Line Freq]	588	[Device Size]	465		
		[Output Voltage]	233	[Elapsed Lifetime]	235		
Load Control	**Load Data**	[Load Rated Volt]	175	[Load Rated Curr]	179		
	Current Reg	[CD Curr Thr]	838	[DC Curr P Base]	849	[DC Curr I]	848
		[CD Factor P]	839	[DC Curr I Base]	850	[DC Curr P In Use]	845
		[CD Factor I]	840	[DC Curr P]	847	[DC Curr I In Use]	846
	Curr Attributes	[Current Limit]	7	[Current Ref]	39	[Zero Current]	353
		[Current Lim Pos]	8	[Trim Current]	40		
		[Current Lim Neg]	9	[Curr Reduction]	342		
	Volt Feedback	[Feedback Offset]	563				
	Autotune	[CurrReg Autotune]	452	[VltReg Kp Pct]	1034	[VltReg Ki Pct]	1035
		[Autotune Status]	451				
Volt Command	**Limits**	[Minimum Voltage]	1	[Min Volt Rev]	6	[Max Volt Fwd]	3
		[Min Volt Fwd]	5	[Maximum Voltage]	2	[Max Volt Rev]	4
	Discrete Volts	[Jog Voltage]	266	[Preset Volt 3]	156	[Preset Volt 7]	160
		[Jog Off Delay]	1409	[Preset Volt 4]	157	[TB Manual Ref]	267
		[Preset Volt 1]	154	[Preset Volt 5]	158		
		[Preset Volt 2]	155	[Preset Volt 6]	159		
	Volt References	[Trim Ramp]	42	[Trim Volt]	43	[Volt Ratio]	1017
		[Trim Ramp Pct]	378	[Trim Volt Pct]	379		
	Volt Regulator	[Vlt Reg Kp]	87	[Vlt Reg Ki]	88		
Dynamic Control	**Control Config**	[Vlt Cur Mode Sel]	241				
	Ramp Rates	[Volt Ramp En]	245	[Accel Time 2]	24	[Jog Ramp Time]	1410
		[Ramp Type Select]	18	[Decel Time 2]	32	[S Curve Time]	19
		[Accel Time 1]	660	[MOP Accel Time]	22		
		[Decel Time 1]	662	[MOP Decel Time]	30		
	Restart Modes	[Start At Powerup]	1344	[Powerup Delay]	1345		
Utility	**Reference Config**	[Direction Mode]	1322	[Man Ref Preload]	210	[MOP Select]	1375
		[Save HIM Ref]	209	[MOP Ref Config]	249		
	Device Memory	[Param Access Lvl]	211	[Reset Defaults]	258	[Language]	302
	Diagnostics	[Device Status 1]	381	[Last Stop Source]	1402	[At Zero Volt]	395
		[Device Status 2]	382	[Start Inhibits]	1403	[CurrLimit Active]	349
		[Volt Ref Source]	1329	[Device Logic Rslt]	1328	[Vlt Limit Active]	372
		[Vlt Ref Sel Sts]	1330	[At Voltage]	394		
	Faults	[Clear Fault Que]	263	[Status1 at Fault]	1349	[Fault Voltage]	1374
		[Fault Clear]	1347	[Status2 at Fault]	1350	[Fault 1 Code]	1351
		[Fault Clr Mode]	1348	[Fault Amps]	1371		
	Alarms	[Device Alarm 1]	1380				

File	Group	Parameters					
Communications	**Comm Control**	[DPI Baud Rate]	589	[DPI Fdbk Select]	1321	[DPI Port Value]	1343
		[DPI Port Sel]	590				
	Masks & Owners	[Logic Mask]	591	[MOP Mask]	598	[Reference Owner]	604
		[Start Mask]	592	[Local Mask]	599	[Accel Owner]	605
		[Jog Mask]	593	[Decel Mask]	631	[Fault Clr Owner]	606
		[Direction Mask]	594	[Stop Owner]	600	[MOP Owner]	607
		[Reference Mask]	595	[Start Owner]	601	[Local Owner]	608
		[Accel Mask]	596	[Jog Owner]	602	[Decel Owner]	609
		[Fault Clr Mask]	597	[Direction Owner]	603		
	Datalinks	[Data In A1]	610	[Data In D1]	616	[Data Out C1]	622
		[Data In A2]	611	[Data In D2]	617	[Data Out C1]	623
		[Data In B1]	612	[Data Out A1]	618	[Data Out D1]	624
		[Data In B2]	613	[Data Out A2]	619	[Data Out D2]	625
		[Data In C1]	614	[Data Out B1]	620	[Data In Val Sel]	1319
		[Data In C2]	615	[Data Out B2]	621	[Data In SelData]	1320
	Security	[Logic Mask]	591				
Input / Output	**Analog Inputs**	[Anlg In1 Sel]	70	[Anlg In1 Target]	295	[Anlg In1 Cmp Eq]	1045
		[Anlg In1 Config]	71	[Anlg In2 Target]	296	[Analog In1 Value]	1404
		[Anlg In2 Sel]	75	[Anlg In3 Target]	297	[Analog In2 Value]	1405
		[Anlg In2 Config]	76	[Anlg In1 Cmp]	1042	[Analog In3 Value]	1406
		[Anlg In3 Sel]	80	[Anlg In1 Cmp Err]	1043		
		[Anlg In3 Config]	81	[Anlg In1 Cmp Dly]	1044		
	Analog Outputs	[Anlg Out1 Sel]	66	[Anlg Out4 Sel]	69	[Analog Out3 Scale]	64
		[Anlg Out2 Sel]	67	[Analog Out1 Scale]	62	[Analog Out4 Scale]	65
		[Anlg Out3 Sel]	68	[Analog Out2 Scale]	63		
	Digital Inputs	[Dig In Status]	564	[Digital In9 Sel]	141	[Dig In Term 6]	570
		[Digital In1 Sel]	133	[Digital In10 Sel]	142	[Dig In Term 7]	571
		[Digital In2 Sel]	134	[Digital In11 Sel]	143	[Dig In Term 8]	572
		[Digital In3 Sel]	135	[Digital In12 Sel]	144	[Dig In Term 9]	573
		[Digital In4 Sel]	136	[Dig In Term 1]	565	[Dig In Term 10]	574
		[Digital In5 Sel]	137	[Dig In Term 2]	566	[Dig In Term 11]	575
		[Digital In6 Sel]	138	[Dig In Term 3]	567	[Dig In Term 12]	576
		[Digital In7 Sel]	139	[Dig In Term 4]	568		
		[Digital In8 Sel]	140	[Dig In Term 5]	569		
	Digital Outputs	[Dig Out Status]	581	[Digital Out4 Sel]	148	[Digital Out8 Sel]	152
		[Digital Out1 Sel]	145	[Digital Out5 Sel]	149	[Relay Out 1 Sel]	1392
		[Digital Out2 Sel]	146	[Digital Out6 Sel]	150	[Relay Out 2 Sel]	629
		[Digital Out3 Sel]	147	[Digital Out7 Sel]	151		
	DPI Inputs	[DPI P1 Select]	1323	[DPI P3 Select]	1325	[DPI P5 Select]	1327
		[DPI P2 Select]	1324	[DPI P4 Select]	1326		

Advanced Parameter View

Parameter 211 [Param Access Lvl] set to option 1 “Advanced”.

File	Group	Parameters					
Monitor	**Volt Meters**	[Volt Ref A]	44	[Ramp In Pct]	111	[Volt Reg Err]	1010
		[Volt Ref A Pct]	47	[Ramp Out]	113	[Vlt Reg Err Pct]	1011
		[Volt Ref B]	48	[Ramp Out Pct]	114	[Volt Reg Fdbk]	1008
		[Volt Ref B Pct]	49	[Volt Draw Out]	1018	[Vlt Reg Fdbk Pct]	1009
		[Volt Ref Out]	385	[Vlt Draw Out Pct]	1019	[Volt Feedback]	122
		[Volt Ref Out Pct]	384	[Volt Reg In]	118	[Vlt Feedback Pct]	121
		[Ramp In]	110	[Volt Reg In Pct]	117	[Actual Voltage]	924
	Current Meters	[Vlt Reg Out Pct]	236	[VltReg PosLmOut]	89	[Filt Curr Pct]	928
		[Current Reg In]	41	[VltReg NegLmOut]	90	[Selected CurrRef]	14
		[Out Current]	200	[Cur Lim Pos Out]	10	[Load Curr Ref]	17
		[Out Current Pct]	199	[Cur Lim Neg Out]	11	[Digital Curr Ref]	862
	Device Data	[FaultCode]	57	[Output Power]	1052	[Elapsed Lifetime]	235
		[AC Line Voltage]	466	[Firing Angle]	165	[Software Version]	331
		[AC Line Freq]	588	[Device Type]	300	[Device Checksum]	332
		[Output Voltage]	233	[Device Size]	465		
Load Control	**Load Data**	[Load Rated Volt]	175	[Load Rated Curr]	179		
	Current Reg	[CD Curr Thr]	838	[DC Curr P Base]	849	[DC Curr I]	848
		[CD Factor P]	839	[DC Curr I Base]	850	[DC Curr P In Use]	845
		[CD Factor I]	840	[DC Curr P]	847	[DC Curr I In Use]	846
	Curr Attributes	[Current Limit]	7	[Current Rate Lim]	12	[Curr Reduction]	342
		[Current Lim Pos]	8	[Current Ref]	39	[Zero Current]	353
		[Current Lim Neg]	9	[Trim Current]	40	[Current Filter]	926
	Volt Feedback	[Feedback Offset]	563	[Vlt FB Filt BW]	915	[Act Volt Filter]	923
		[Vlt FB Filt Gain]	914				
	Autotune	[CurrReg Autotune]	452	[Vlt Reg Kp Base]	93	[VltReg Kp Pct]	1034
		[Autotune Status]	451	[Vlt Reg Ki Base]	94	[VltReg Ki Pct]	1035
	Test Generator	[TstGen Output]	58	[Test Angle]	167	[OpenSCR Flt Cfg]	216
		[TstGen Frequency]	59	[SCR Diag Test En]	213	[OpenSCR Threshld]	217
		[TstGen Amplitude]	60	[SCR Diag Status]	214	[OpenSCR Trip Lvl]	218
		[TstGen Offset]	61	[OpenSCR WarnLvl]	215		
		[Alpha Test]	166				
Volt Command	**Limits**	[Minimum Voltage]	1	[Min Volt Rev]	6	[Max Volt Fwd]	3
		[Min Volt Fwd]	5	[Maximum Voltage]	2	[Max Volt Rev]	4
	Discrete Volts	[Jog Voltage]	266	[Preset Volt 3]	156	[Preset Volt 7]	160
		[Jog Off Delay]	1409	[Preset Volt 4]	157	[TB Manual Ref]	267
		[Preset Volt 1]	154	[Preset Volt 5]	158		
		[Preset Volt 2]	155	[Preset Volt 6]	159		
	Volt References	[Trim Ramp]	42	[Trim Volt]	43	[Volt Ratio]	1017
		[Trim Ramp Pct]	378	[Trim Volt Pct]	379		
	Volt Regulator	[Volt Reg Kp]	87	[Volt Thresh Pos]	101	[Vlt Zero I En]	123
		[Volt Reg Ki]	88	[Volt Thresh Neg]	102	[Vlt Ref Zero En]	124
		[Vlt Reg Kp Outpt]	99	[Threshold Delay]	103	[Vlt Zero P En]	125
		[Vlt Reg Ki Outpt]	100	[At Voltage Error]	104	[Vlt Zero P Gain]	126
		[Vlt Reg Pos Lim]	95	[At Voltage Delay]	105	[Lock Volt Integ]	348
		[Vlt Reg Neg Lim]	96	[Ref Zero Level]	106	[VltReg AntiBckup]	643
		[VltOut FiltGain]	238	[Volt Zero Level]	107	[Vlt Reg P Filter]	444
		[VltOut FiltBW]	239	[Volt Zero Delay]	108		

File	Group	Parameters					
Dynamic Control	**Control Config**	[Vlt Cur Mode Sel]	241	[Arm En Flux Pct]	242		
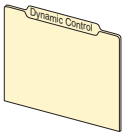	**Ramp Rates**	[Volt Ramp En]	245	[MOP Accel Time]	22	[S Curve Accel 2]	667
		[Ramp Type Select]	18	[MOP Decel Time]	30	[S Curve Decel 2]	668
		[Accel Time 1]	660	[Jog Ramp Time]	1410	[Ramp Delay]	20
		[Decel Time 1]	662	[S Curve Time]	19	[Zero Ramp Output]	344
		[Accel Time 2]	24	[S Curve Accel 1]	665	[Zero Ramp Input]	345
		[Decel Time 2]	32	[S Curve Decel 1]	666	[Freeze Ramp]	373
	Load Limits	[Curr Red CurLim]	13	[Curr Limit Type]	715		
	Stop Modes	[Fast Stop Time]	38	[Vlt 0 Trip Delay]	627		
	Restart Modes	[Start At Powerup]	1344	[Powerup Delay]	1345		
	Adaptv Regulator	[Adaptive Vlt En]	181	[Adaptive Joint 1]	186	[Adaptive I Gain2]	191
		[Adaptive Reg Typ]	182	[Adaptive Joint 2]	187	[Adaptive P Gain3]	192
		[Adaptive Ref]	183	[Adaptive P Gain1]	188	[Adaptive I Gain3]	193
		[Adaptive Vlt 1]	184	[Adaptive I Gain1]	189		
		[Adaptive Vlt 2]	185	[Adaptive P Gain2]	190		
Applications	**PI Control**	[Enable PI]	769	[PI Prop Gain PID]	765	[PI Central v3]	778
		[PI Output]	771	[PI Integral Gain]	764	[PI Central v sel]	779
		[PI Steady Thr]	695	[PI Upper Limit]	784	[PI Central vs0]	780
		[PID Steady Delay]	731	[PI Lower Limit]	785	[PI Central vs1]	781
		[PI Init Prop Gn]	793	[PI Central v1]	776	[PI Integr Freeze]	783
		[PI Init Intgl Gn]	734	[PI Central v2]	777		
	PD Control	[Enable PD]	770	[PD Prop Gain 2]	788	[PD Deriv Gain 1]	766
		[PD Output PID]	421	[PD Prop Gain 3]	790	[PD Deriv Gain 2]	789
		[PD Prop Gain 1]	768	[PD Deriv Filter]	767	[PD Deriv Gain 3]	791
	PID Control	[Enable PID]	1258	[PID Target]	782	[PID Clamp]	757
		[PID Output]	774	[PID Output Scale]	773	[PID Setpoint 0]	760
		[Feed Fwd PID]	758	[PID Output Sign]	772	[PID Setpoint 1]	761
		[Real FF PID]	418	[PID Feedback]	763	[PID Setpoint Sel]	762
		[PID Source]	786	[PID Error]	759	[PID Accel Time]	1046
		[PID Source Gain]	787	[PID Error Gain]	1254	[PID Decel Time]	1047
	Scale Blocks	[Scale1 Input]	484	[Scale3 Input]	1218	[Scale5 Input]	1236
		[Scale1 Output]	485	[Scale3 Output]	1219	[Scale5 Output]	1237
		[Scale1 Mul]	486	[Scale3 Mul]	1220	[Scale5 Mul]	1238
		[Scale1 Div]	487	[Scale3 Div]	1221	[Scale5 Div]	1239
		[Scale1 In Max]	488	[Scale3 In Max]	1222	[Scale5 In Max]	1240
		[Scale1 In Min]	489	[Scale3 In Min]	1223	[Scale5 In Min]	1241
		[Scale1 In Off]	490	[Scale3 In Off]	1224	[Scale5 In Off]	1242
		[Scale1 Out Off]	491	[Scale3 Out Off]	1225	[Scale5 Out Off]	1243
		[Scale1 In Abs]	492	[Scale3 In Abs]	1226	[Scale5 In Abs]	1244
		[Scale2 Input]	553	[Scale4 Input]	1227	[Scale6 Input]	1245
		[Scale2 Output]	554	[Scale4 Output]	1228	[Scale6 Output]	1246
		[Scale2 Mul]	555	[Scale4 Mul]	1229	[Scale6 Mul]	1247
		[Scale2 Div]	556	[Scale4 Div]	1230	[Scale6 Div]	1248
		[Scale2 In Max]	557	[Scale4 In Max]	1231	[Scale6 In Max]	1249
		[Scale2 In Min]	558	[Scale4 In Min]	1232	[Scale6 In Min]	1250
		[Scale2 In Off]	559	[Scale4 In Off]	1233	[Scale6 In Off]	1251
		[Scale2 Out Off]	560	[Scale4 Out Off]	1234	[Scale6 Out Off]	1252
		[Scale2 In Abs]	561	[Scale4 In Abs]	1235	[Scale6 In Abs]	1253

File	Group	Parameters					
Utility	**Reference Config**	[Direction Mode]	1322	[Man Ref Preload]	210	[MOP Select]	1375
		[Save HIM Ref]	209	[MOP Ref Config]	249		
	Device Memory	[Param Access Lvl]	211	[Reset Defaults]	258	[Language]	302
	Diagnostics	[Device Status 1]	381	[Vlt Limit Active]	372	[Ramp Select 1]	404
		[Device Status 2]	382	[Volt Threshold]	393	[TestPoint Sel]	1381
		[Volt Ref Source]	1329	[Curr Positive]	346	[TestPoint Data]	1382
		[Vlt Ref Sel Sts]	1330	[Curr Negative]	347	[TaskLoad 1 ms]	1384
		[Last Stop Source]	1402	[MOP Inc Active]	396	[TaskLoad 2 ms]	1385
		[Start Inhibits]	1403	[MOP Dec Active]	397	[TaskLoad 8 ms]	1386
		[Device Logic Rslt]	1328	[Vlt Select 0]	400		
		[At Voltage]	394	[Vlt Select 1]	401		
		[At Zero Volt]	395	[Vlt Select 2]	402		
		[CurrLimit Active]	349	[Ramp Select 0]	403		
	Faults	[Clear Fault Que]	263	[Fault 3 Code]	1353	[Fault 2 Time]	1362
		[Fault Clear]	1347	[Fault 4 Code]	1354	[Fault 3 Time]	1363
		[Fault Clr Mode]	1348	[Fault 5 Code]	1355	[Fault 4 Time]	1364
		[Status1 at Fault]	1349	[Fault 6 Code]	1356	[Fault 5 Time]	1365
		[Status2 at Fault]	1350	[Fault 7 Code]	1357	[Fault 6 Time]	1366
		[Fault Amps]	1371	[Fault 8 Code]	1358	[Fault 7 Time]	1367
		[Fault Voltage]	1374	[Fault 9 Code]	1359	[Fault 8 Time]	1368
		[Fault 1 Code]	1351	[Fault 10 Code]	1360	[Fault 9 Time]	1369
		[Fault 2 Code]	1352	[Fault 1 Time]	1361	[Fault 10 Time]	1370
	Alarms	[Device Alarm 1]	1380	[UnderVolt Thresh]	481	[Overvolt Val]	585
		[Aux Inp Flt Cfg]	354	[UnderVlt Flt Dly]	470	[SSC Flt Dly]	855
		[OverTemp Flt Cfg]	365	[OverCurrent Thr]	584		
	User Defined	[UsrDsplyMult0]	50	[UserDefined14]	517	[UsrDefBitWrdA15]	535
		[UsrDsplyDiv0]	51	[UserDefined15]	518	[UsrDefBitWrdB]	536
		[UsrValMult1]	53	[UsrDefBitWrdA]	519	[UsrDefBitWrdB0]	537
		[UsrValDiv1]	54	[UsrDefBitWrdA0]	520	[UsrDefBitWrdB1]	538
		[UserDefined0]	503	[UsrDefBitWrdA1]	521	[UsrDefBitWrdB2]	539
		[UserDefined1]	504	[UsrDefBitWrdA2]	522	[UsrDefBitWrdB3]	540
		[UserDefined2]	505	[UsrDefBitWrdA3]	523	[UsrDefBitWrdB4]	541
		[UserDefined3]	506	[UsrDefBitWrdA4]	524	[UsrDefBitWrdB5]	542
		[UserDefined4]	507	[UsrDefBitWrdA5]	525	[UsrDefBitWrdB6]	543
		[UserDefined5]	508	[UsrDefBitWrdA6]	526	[UsrDefBitWrdB7]	544
		[UserDefined6]	509	[UsrDefBitWrdA7]	527	[UsrDefBitWrdB8]	545
		[UserDefined7]	510	[UsrDefBitWrdA8]	528	[UsrDefBitWrdB9]	546
		[UserDefined8]	511	[UsrDefBitWrdA9]	529	[UsrDefBitWrdB10]	547
		[UserDefined9]	512	[UsrDefBitWrdA10]	530	[UsrDefBitWrdB11]	548
		[UserDefined10]	513	[UsrDefBitWrdA11]	531	[UsrDefBitWrdB12]	549
		[UserDefined11]	514	[UsrDefBitWrdA12]	532	[UsrDefBitWrdB13]	550
		[UserDefined12]	515	[UsrDefBitWrdA13]	533	[UsrDefBitWrdB14]	551
		[UserDefined13]	516	[UsrDefBitWrdA14]	534	[UsrDefBitWrdB15]	552
Communications	**Comm Control**	[DPI Baud Rate]	589	[DPI Fdbk Select]	1321	[DPI Port Value]	1343
		[DPI Port Sel]	590				
	Masks & Owners	[Logic Mask]	591	[MOP Mask]	598	[Reference Owner]	604
		[Start Mask]	592	[Local Mask]	599	[Accel Owner]	605
		[Jog Mask]	593	[Decel Mask]	631	[Fault Clr Owner]	606
		[Direction Mask]	594	[Stop Owner]	600	[MOP Owner]	607
		[Reference Mask]	595	[Start Owner]	601	[Local Owner]	608
		[Accel Mask]	596	[Jog Owner]	602	[Decel Owner]	609
		[Fault Clr Mask]	597	[Direction Owner]	603		
	Datalinks	[Data In A1]	610	[Data In D1]	616	[Data Out C1]	622
		[Data In A2]	611	[Data In D2]	617	[Data Out C1]	623
		[Data In B1]	612	[Data Out A1]	618	[Data Out D1]	624
		[Data In B2]	613	[Data Out A2]	619	[Data Out D2]	625
		[Data In C1]	614	[Data Out B1]	620	[Data In Val Sel]	1319
		[Data In C2]	615	[Data Out B2]	621	[Data In SelData]	1320
	Security	[Logic Mask]	591	[Write Mask Act]	1377	[Port Mask Act]	1379
		[Logic Mask Act]	1376	[Write Mask Cfg]	1378		

File	Group	Parameters					
Input / Output	**Analog Inputs**	[Anlg In1 Sel]	70	[Anlg In2 Offset]	79	[Anlg In2 Target]	296
		[Anlg In1 Config]	71	[Anlg In2 Tune]	260	[Anlg In3 Target]	297
		[Anlg In1 Scale]	72	[Anlg In2 Filter]	801	[Anlg In1 Cmp]	1042
		[Anlg1 Tune Scale]	73	[Anlg In3 Sel]	80	[Anlg In1 Cmp Err]	1043
		[Anlg In1 Offset]	74	[Anlg In3 Config]	81	[Anlg In1 Cmp Dly]	1044
		[Anlg In1 Tune]	259	[Anlg In3 Scale]	82	[Anlg In1 Cmp Eq]	1045
		[Anlg In1 Filter]	792	[Anlg3 Tune Scale]	83	[Analog In1 Value]	1404
		[Anlg In2 Sel]	75	[Anlg In3 Offset]	84	[Analog In2 Value]	1405
		[Anlg In2 Config]	76	[Anlg In3 Tune]	261	[Analog In3 Value]	1406
		[Anlg In2 Scale]	77	[Anlg In3 Filter]	802		
		[Anlg2 Tune Scale]	78	[Anlg In1 Target]	295		
	Analog Outputs	[Anlg Out1 Sel]	66	[Anlg Out4 Sel]	69	[Analog Out3 Scale]	64
		[Anlg Out2 Sel]	67	[Analog Out1 Scale]	62	[Analog Out4 Scale]	65
		[Anlg Out3 Sel]	68	[Analog Out2 Scale]	63		
	Digital Inputs	[ContactorControl]	1391	[Digital In12 Sel]	144	[Dig In Term 1]	565
		[Dig In Status]	564	[Inversion In 1]	1276	[Dig In Term 2]	566
		[Digital In1 Sel]	133	[Inversion In 2]	1277	[Dig In Term 3]	567
		[Digital In2 Sel]	134	[Inversion In 3]	1278	[Dig In Term 4]	568
		[Digital In3 Sel]	135	[Inversion In 4]	1279	[Dig In Term 5]	569
		[Digital In4 Sel]	136	[Inversion In 5]	1280	[Dig In Term 6]	570
		[Digital In5 Sel]	137	[Inversion In 6]	1281	[Dig In Term 7]	571
		[Digital In6 Sel]	138	[Inversion In 7]	1282	[Dig In Term 8]	572
		[Digital In7 Sel]	139	[Inversion In 8]	1283	[Dig In Term 9]	573
		[Digital In8 Sel]	140	[Inversion In 9]	1387	[Dig In Term 10]	574
		[Digital In9 Sel]	141	[Inversion In 10]	1388	[Dig In Term 11]	575
		[Digital In10 Sel]	142	[Inversion In 11]	1389	[Dig In Term 12]	576
		[Digital In11 Sel]	143	[Inversion In 12]	1390		
	Digital Outputs	[Dig Out Status]	581	[Digital Out7 Sel]	151	[Inversion Out 4]	1270
		[Digital Out1 Sel]	145	[Digital Out8 Sel]	152	[Inversion Out 5]	1271
		[Digital Out2 Sel]	146	[Relay Out 1 Sel]	1392	[Inversion Out 6]	1272
		[Digital Out3 Sel]	147	[Relay Out 2 Sel]	629	[Inversion Out 7]	1273
		[Digital Out4 Sel]	148	[Inversion Out 1]	1267	[Inversion Out 8]	1274
		[Digital Out5 Sel]	149	[Inversion Out 2]	1268	[Inversion Relay1]	1393
		[Digital Out6 Sel]	150	[Inversion Out 3]	1269	[Inversion Relay2]	1275
	DPI Inputs	[DPI P1 Select]	1323	[DPI P3 Select]	1325	[DPI P5 Select]	1327
		[DPI P2 Select]	1324	[DPI P4 Select]	1326		

Table 2 - Monitor File

File	Group	No.	Parameter Name & Description See page 20 for symbol descriptions	Values		Data Type	Related
MONITOR	Volt Meters	44	**[Volt Ref A]** Displays the first voltage reference of the field controller. This parameter can be sourced from many signals and is the factory default selection for Par 70 [Anlg In1 Sel]. See block diagram Voltage Reference Selection on page 108 for possible source signals.	Default: Min/Max: Units:	Read Only –/+ Par 175 [Load Rated Volt] (1) V (1) The value of [Load Rated Volt} cannot exceed 999V	16-bit Int	175
		47	**[Volt Ref A Pct]** Displays the first voltage reference of the field controller as a percentage of Par 175 [Load Rated Volt]. This parameter can be sourced from many signals. See block diagram Voltage Reference Selection on page 108 for possible source signals. This parameter can be assigned to an analog input.	Default: Min/Max: Units:	Read Only –/+100.0 %	Real	175
		48	**[Volt Ref B]** Displays the second voltage reference of the field controller. This parameter can be sourced from many signals. See block diagram Voltage Reference Selection on page 108 for possible source signals.	Default: Min/Max: Units:	Read Only –/+ Par 175 [Load Rated Volt] V (1) The value of [Load Rated Volt} cannot exceed 999V	16-bit Int	175
		49	**[Volt Ref B Pct]** Displays the second voltage reference of the field controller as a percentage of Par 175 [Load Rated Volt]. This parameter can be sourced from many signals. See block diagram Voltage Reference Selection on page 108 for possible source signals.	Default: Min/Max: Units:	Read Only –/+100.0 %	Real	175
		110	**[Ramp In]** Total reference value input to the ramp in Volts. This parameter can be assigned to an analog output.	Default: Min/Max: Units:	Read Only –/+8192 V	16-bit Int	
		111	**[Ramp In Pct]** Total reference value input to the ramp as a percentage of Par 175 [Load Rated Volt]. This parameter can be assigned to an analog output.	Default: Min/Max: Units:	Read Only –/+200.0 %	Real	175
		113	**[Ramp Out]** Output of the ramp in Volts. This parameter can be assigned to an analog output.	Default: Min/Max: Units:	Read Only –/+8192 V	16-bit Int	
		114	**[Ramp Out Pct]** Output of the ramp as a percentage of Par 175 [Load Rated Volt]. This parameter can be assigned to an analog output.	Default: Min/Max: Units:	Read Only –/+200.0 %	Real	175
		117	**[Volt Reg In Pct]** Total reference value input to the Voltage Regulator as a percentage of Par 175 [Load Rated Volt]. This parameter can be assigned to an analog output.	Default: Min/Max: Units:	Read Only –/+200.0 %	Real	175
		118	**[Volt Reg In]** Total reference value input to the Voltage Regulator in Volts. This parameter can be assigned to an analog output.	Default: Min/Max: Units:	Read Only –/+8192 V	16-bit Int	
		121	**[Vlt Feedback Pct]** Actual voltage as a percentage of the Par 175 [Load Rated Volt]. This parameter can be assigned to an analog output and is the factory default selection for Par 66 [Anlg Out1 Sel].	Default: Min/Max: Units:	Read Only –/+200.0 %	Real	66, 175
		122	**[Volt Feedback]** Actual voltage.	Default: Min/Max: Units:	Read Only –/+8192 V	16-bit Int	
		384	**[Volt Ref Out Pct]** Output of the Voltage Reference selection as a percentage of Par 175 [Load Rated Volt]. This parameter can be assigned to an analog output.	Default: Min/Max: Units:	Read Only –/+200.0 %	Real	175
		385	**[Volt Ref Out]** Output of the Voltage Reference selection. This parameter can be assigned to an analog output.	Default: Min/Max: Units:	Read Only –/+8192 V	16-bit Int	

Table 2 - Monitor File (continued)

File	Group	No.	Parameter Name & Description See page 20 for symbol descriptions	Values		Data Type	Related
MONITOR	Volt Meters	924	**[Actual Voltage]** Filtered value of Par 122 [Volt Feedback]. Par 923 [Act Volt Filter] can be used to provide limited (first order low pass) filtering of this value. This parameter can be assigned to an analog output.	Default: Min/Max: Units:	Read Only –/+8192 V	16-bit Int	121, 222, 923
		1008	**[Volt Reg Fdbk]** Voltage Regulator Feedback signal after all filtering has been applied.	Default: Min/Max: Units:	Read Only –/+8192 V	16-bit Int	
		1009	**[Vlt Reg Fdbk Pct]** Par 1008 [Volt Reg Fdbk] shown as a percentage of Par 175 [Load Rated Volt].	Default: Min/Max: Units:	Read Only –/+200.0 %	Real	175
		1010	**[Volt Reg Err]** Voltage Regulator Error signal, the difference between Par 118 [Volt Reg In] and 1008 [Volt Reg Fdbk].	Default: Min/Max: Units:	Read Only –/+8192 V	16-bit Int	118, 1008
		1011	**[Vlt Reg Err Pct]** Par 1010 [Volt Reg Err] shown as a percentage of Par 175 [Load Rated Volt].	Default: Min/Max: Units:	Read Only –/+200.0 %	Real	175
		1018	**[Volt Draw Out]** Voltage draw output value. This parameter can be assigned to an analog output. See Voltage Regulator on page 112 for more information.	Default: Min/Max: Units: (1) The value of [Load Rated Volt] cannot exceed 999V	Read Only –/+ Par 175 [Load Rated Volt] V	16-bit Int	175
		1019	**[Vlt Draw Out Pct]** Voltage draw output as a percentage of Par 175 [Load Rated Volt]. Note: This parameter can be assigned to an analog output.	Default: Min/Max: Units:	Read Only –/+100.0 %	Real	175
	Current Meters	10	**[Cur Lim Pos Out]** Displays the value of the current limit for the positive current direction as a percentage of the value in Par 179 [Load Rated Curr].	Default: Min/Max: Units:	Read Only 0.0 / 100.0 %	Real	179
		11	**[Cur Lim Neg Out]** Displays the value of the current limit for the current direction as a percentage of the value in Par 179 [Load Rated Curr].	Default: Min/Max: Units:	Read Only 0.0 / 100.0 %	Real	179
		14	**[Selected CurrRef]** Displays the selected current reference based on Par 241 [Vlt Cur Mode Sel] value. Scaled as a percentage of Par 179 [Load Rated Curr].	Default: Min/Max: Units:	Read Only –/+250.0 %	Real	179, 241
		17	**[Load Curr Ref]** Displays the total load current reference. Scaled as a percentage of Par 179 [Load Rated Curr].	Default: Min/Max: Units:	Read Only –/+250.0 %	Real	179
		41	**[Current Reg In]** Total current reference value expressed as a percentage of the value in Par 179 [Load Rated Curr]. This parameter can be assigned to an analog output.	Default: Min/Max: Units:	Read Only –/+250.0 %	Real	179
		89	**[VltReg PosLmOut]** Indication of the positive limit value in effect on the output of the voltage regulator.	Default: Min/Max: Units:	Read Only –/+250.0 %	Real	
		90	**[VltReg NegLmOut]** Indication of the negative limit value in effect on the output of the voltage regulator.	Default: Min/Max: Units:	Read Only –/+250.0 %	Real	
		199	**[Out Current Pct]** Output current expressed as a percentage of the value in Par 179 [Load Rated Curr]. This parameter can be assigned to an analog output and is the default selection for Par 67 [Anlg Out2 Sel].	Default: Min/Max: Units:	Read Only –/+250 %	16-bit Int	179

Table 2 - Monitor File (continued)

File	Group	No.	Parameter Name & Description See page 20 for symbol descriptions	Values		Data Type	Related
MONITOR	Current Meters	200	**[Out Current]** Output current in Amperes. Note: This parameter can be assigned to an analog output.	Default: Min/Max: Units:	Read Only –/+2.50 x Par 179 [Load Rated Curr] A	Real	179
		236	**[Vlt Reg Out Pct]** Output value of the voltage regulator as a percentage of Par 179 [Load Rated Curr], used as the reference for the current regulator.	Default: Min/Max: Units:	Read Only –/+250.00 %	Real	179
		862	**[Digital Curr Ref]** The current reference received from the Fiber-optic Interface option module, when installed. When the field controller is used in stand-alone mode, the current reference source is Par 39 [Current Ref].	Default: Min/Max: Units:	Read Only –/+100 %	16-bit Int	39
		928	**[Filt Curr Pct]** Filtered value of Par 199 [Out Current Pct]. The amount of filtering is set by Par 926 [Current Filter].	Default: Min/Max: Units:	Read Only –/+250 %	16-bit Int	199, 926
	Device Data	57	**[FaultCode]** A code that shows the last active fault on the device. If there are no active faults, this value will be 0 "No Fault". The last 10 faults in the device can be viewed in Pars 1351…1370. See Fault Descriptions on page 93 for a list of fault codes and descriptions.	Default: Min/Max:	Read Only 0 / 65535	16-bit Int	1351
		165 A	**[Firing Angle]** The actual SCR firing angle.	Default: Min/Max: Units:	120.00 (Read Only) 0.0 / 180.0 deg	Real	
		233	**[Output Voltage]** Measured output voltage. This parameter can be assigned to an analog output and is the default selection for Par 69 [Anlg Out4 Sel].	Default: Min/Max: Units:	Read Only -/+999.00 Vdc	Real	
		235	**[Elapsed Lifetime]** Shows the operating time of the field controller. This parameter counts the time for which the field controller is energized (even if the device is disabled).	Default: Min/Max: Units:	Read Only 0.00 / 65535.00 H.m	Real	
		300	**[Device Type]** Displays of the field controller type. "10" = Non-Regenerative "11" = Regenerative	Default: Min/Max:	11 (Read Only) 10 / 11	16-bit Int	
		331	**[Software Version]** Displays the Major and Minor (Major.Minor) firmware version numbers active in the field controller.	Default: Min/Max:	Read Only 1.00 / 999.00	Real	
		332	**[Device Checksum]** Provides a checksum value that indicates whether or not a change in device programming has occurred.	Default: Min/Max:	Read Only 0 / 65535	16-bit Int	
		465	**[Device Size]** Output current rating (as indicated by the configuration of DIP switch S15 on the control board). Note: S15 is set to the appropriate value at the factory. However, if the control board was supplied separate from the device and installed as a replacement part, S15 must be manually set to the appropriate device size. See Main Control Circuit Board DIP Switch and Jumper Settings in the PowerFlex DC Field Controller Installation Instructions, publication 23PFC-IN001, for details.	Default: Min/Max: Units:	Read Only 0 / Based on device current rating A	16-bit Int	
		466	**[AC Line Voltage]** AC input voltage.	Default: Min/Max: Units:	Read Only 0 / 960 Vac	16-bit Int	
		588	**[AC Line Freq]** AC input frequency.	Default: Min/Max: Units:	Read Only 0.0 / 70.0 Hz	Real	
		1052	**[Output Power]** Output power. Note: This parameter can be assigned to an analog output.	Default: Min/Max: Units:	Read Only 0.00 / 10000.0 kW	Real	

Table 3 - Load Control File

File	Group	No.	Parameter Name & Description See page 20 for symbol descriptions	Values		Data Type	Related
LOAD CONTROL	Load Data	175	**[Load Rated Volt]** Maximum voltage of the field controller. Typically this parameter is set to the nominal voltage of the load. This parameter affects the threshold of an overvoltage condition, as indicated by an "Overvoltage" fault (F25).	Default: Min/Max: Units:	240.00 20.00 / 999.00 V	Real	481
		179	**[Load Rated Curr]** Rated current. The settings for the current limit and the overload function are based on this current value. Set the value of this parameter to be greater than 1/20 the value of Par 465 [Device Size].	Default: Min/Max: Units:	60.00 0.10 / 60.00 A	Real	465
	Current Reg	838	**[CD Curr Thr]** Used to define P and I gains settings.	Default: Min/Max: Units:	100 0 / 100 %	16-bit Int	
		839	**[CD Factor P]** Used to define P gain setting.	Default: Min/Max:	0.300 0.001 / 100 / P847 [DC Curr P]	Real	
		840	**[CD Factor I]** Used to define I gain setting.	Default: Min/Max:	0.300 0.001 / 100 / P848 [DC Curr I]	Real	
		847	**[DC Curr P]** Used to define P gain setting.	Default: Min/Max: Units	0.500 0.000 / 100 / P839 [CD Factor P] %	Real	
		848	**[DC Curr I]** Used to define I gain setting.	Default: Min/Max: Units	30.000 0.000 / 100 / P840 [CD Factor I] %	Real	
		849	**[DC Curr P Base]** Base value for the internal P gain setting. When P gain is 100% and Par 847 [DC Curr P] base is equal to Pmax, the internal P gain value used by the PI regulator is 32768. For other combinations of P gain and P gain base the internal P gain value is set to values between 0 and 32768. Pmax = 360 x (2000 / P465) x 2^{11}	Default: Min/Max:	0.98 x Pmax 0.001 / Pmax	Real	
		850	**[DC Curr I Base]** Base value for the internal I gain setting. When I gain is 100% and Par 848 [DC Curr I] base is equal to Imax, the internal I gain value used by the PI regulator is 32768. For other combinations of I gain percentage and I gain base the internal I gain value is set to values between 0 and 32768. Imax = 360 x (2000 / P465) x f_vecon / 2^{17} (f_vecon is the frequency at which the DSP control code runs = 24009.6 Hz.)	Default: Min/Max:	0.45 x Imax 0.01 / Imax	Real	

Table 3 - Load Control File (continued)

File	Group	No.	Parameter Name & Description See page 20 for symbol descriptions	Values		Data Type	Related
LOAD CONTROL	Current Reg	845	**[DC Curr P In Use]** Actual P gain in use. The actual P gain is calculated according to the actual current reference following the linear relation indicated in the following graph. 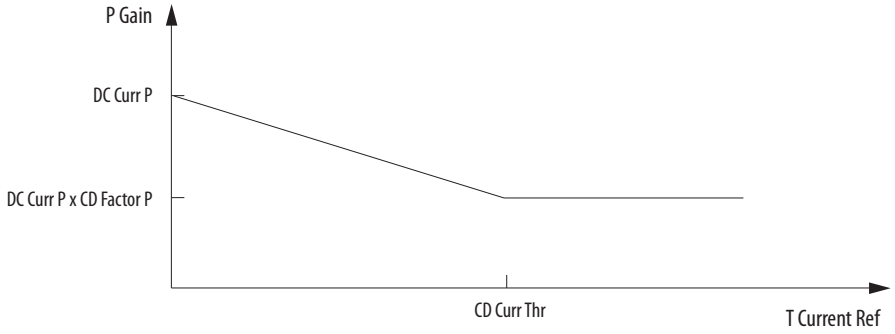 	Default: Min/Max: Units:	Read Only 0.000 / 100.000 %	Real	
		846	**[DC Curr I In Use]** Actual I gain in use. The actual I gain is calculated according to the actual current reference following the linear relation indicated in the following graph. 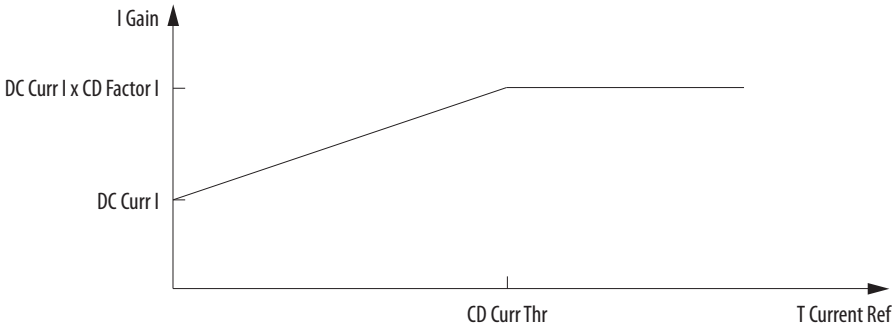 	Default: Min/Max: Units:	Read Only 0.000 / 100.000 %	Real	
	Curr Attributes	7	**[Current Limit]** Symmetrical current limit expressed as a percentage of the value in Par 179 [Load Rated Curr]. This value applies to both current directions. • If Par 7 [Current Limit] is changed, Pars 8 [Current Lim Pos] and 9 [Current Lim Neg] are set to the same value. If either the value of Pars 8 [Current Lim Pos] or 9 [Current Lim Neg] is changed later, the last change is valid.	Default: Min/Max: Units:	100 0 / 100 %	16-bit Int	8, 9, 179
		8	**[Current Lim Pos]** The field controller current limit for the positive current direction expressed as a percentage of the value in Par 179 [Load Rated Curr]. This parameter can be assigned to an analog input.	Default: Min/Max: Units:	100.0 0.0 / 100.0 %	Real	7
		9	**[Current Lim Neg]** The field controller current limit for the negative current direction expressed as a percentage of the value in Par 179 [Load Rated Curr]. This parameter can be assigned to an analog input.	Default: Min/Max: Units:	100.0 0.0 / 100.0 %	Real	7
		12	**[Current Rate Lim]** Specifies the largest change in current reference that will be allowed per current loop scan (2.7 ms @ 60Hz, 3.3 ms @ 50Hz AC line frequency). A value of 100% indicates that the current reference will not be permitted to change by more than rated motor current in a given voltage loop scan period.	Default: Min/Max: Units:	25.0 0.1 / 100.0 %	Real	

Table 3 - Load Control File (continued)

File	Group	No.	Parameter Name & Description See page 20 for symbol descriptions	Values		Data Type	Related
LOAD CONTROL	Curr Attributes	39	**[Current Ref]** First current reference value, before any trim signals are incorporated, as a percentage of the value set in Par 179 [Load Rated Curr]. The current reference value is proportional to the load nominal current.	Default: Min/Max: Units:	0.0 – / +100.0 %	Real	
		40	**[Trim Current]** Second current reference value as a percentage of the value set in Par 179 [Load Rated Curr]. [Trim Current] is added to Current Reference and can be used as a correction value for the current reference (regardless of the value of Par 242 [Arm En Flux Pct]).	Default: Min/Max: Units:	0.0 – / +100.0 %	Real	
		342	**[Curr Reduction]** Selection for current reduction. When the current reduction function is active (1 "Active"), the current limit changes accordingly by the percentage defined in Par 13 [Curr Red CurLim]. When this parameter is set to 0 "Not Active", current reduction is not active. For example: Par 7 [Current Limit] (or Pars 8 [Current Lim Pos] and 9 [Current Lim Neg]) = 80% Par 13 [Curr Red CurLim] = 70% If Par 342 [Curr Reduction] = 0 "Not Active", the current limit = 80% If Par 342 [Curr Reduction] = 1 "Active", the current limit = 70% This parameter can be assigned to a digital input.	Default: Options:	0 = "Not Active" 0 = "Not Active" 1 = "Active"	16-bit Int	13
		353	**[Zero Current]** Sets the reference value for the current (Par 41 [Current Reg In]) to zero so that the field controller has no current. • "Not Active" = Par 41 [Current Reg In] is not set to zero. • "Active" = Par 41 [Current Reg In] is set zero. The field controller has no torque.	Default: Options:	1 = "Not Active" 0 = "Active" 1 = "Not Active"	16-bit Int	41
		926 A	**[Current Filter]** First rate low-pass filter for Par 199 [Out Current Pct].	Default: Min/Max: Units:	0.100 0.001 / 0.250 s	Real	199
	Volt Feedback	563	**[Feedback Offset]** Offset scaling of the voltage feedback circuit.	Default: Min/Max: Units:	0 – / +20 V	Real	
		914 A	**[Vlt FB Filt Gain]** First order lead/lag filter gain on the voltage feedback signal.	Default: Min/Max:	1.00 0.00 / 2.00	Real	915
		915 A	**[Vlt FB Filt BW]** First order lead/lag filter bandwidth on the voltage feedback signal.	Default: Min/Max: Units:	0 0 / 2000 ms	16-bit Int	914
		923 A	**[Act Volt Filter]** First order low pass filter time constant for Par 924 [Actual Voltage].	Default: Min/Max: Units:	0.100 0.001 / 1.000 s	Real	924
	Autotune	93 A	**[Vlt Reg Kp Base]** The proportional gain (KP0) of the voltage regulator (base value). Typically, this parameter does not need to be modified because it is automatically set by the field controller during autotune.	Default: Min/Max:	0.30 x $P93_{max}$ 0.001 / Based on device current rating	Real	87, 99
		94 A	**[Vlt Reg Ki Base]** The integral gain (KI0) of the voltage regulator (base value). Typically, this parameter does not need to be modified because it is automatically set by the field controller during autotune.	Default: Min/Max:	0.30 x Par 94 max 0.001 / Based on device current rating	Real	88, 100

Table 3 - Load Control File (continued)

File	Group	No.	Parameter Name & Description See page 20 for symbol descriptions	Values			Data Type	Related
LOAD CONTROL	Autotune	451	**[Autotune Status]** Indicates the status of the current regulator auto tuning process. • 0 "Not Executed" - an autotune has not been completed since the last power up. • 1 "In Progress" - an autotune is in progress. • 2 "Success" - the last autotune completed successfully. • 3 "Aborted" - the last autotune was manually canceled. • 4 "No Current" - the last autotune failed because no current was detected. • 5 "Gain CalcErr" - the last autotune failed because the optimal gains could not be calculated. This is typically due to an excessively high [DC Curr I] base value. Lower the value of parameter 848 [DC Curr I] and restart the autotune. • 6 "Device Fail" - the autotune failed due to a device fault. See Fault Descriptions on page 93. • 7 "Timeout" - the autotune failed because it did not complete within the permitted time (50 minutes).	Default: Options:	0 = 0 = 1 = 2 = 3 = 4 = 5 = 6 = 7 =	"Not Executed" "Not Executed" "In Progress" "Success" "Aborted" "No Current" "Gain CalcErr" "Device Fail" "Timeout"	16-bit Int	838, 839, 840, 845, 846, 847, 848, 849, 850
		452	**[CurrReg Autotune]** Setting this parameter to 1 "On" and pressing "Start" on the HIM keypad initiates the current regulator auto tuning procedure. When the auto tuning procedure is complete, this parameter automatically resets to 0 "Off". The calculated gains are set in Pars 839 [CD Factor P], 840 [CD Factor I], 847 [DC Curr P], and 848 [DC Curr I].	Default: Options:	0 = 0 = 1 =	"Off" "Off" "On"	16-bit Int	
		1034	**[VltReg Kp Pct]** Internal proportional gain value, original Par 87 [Volt Reg Kp], percentage of Par 93 [Vlt Reg Kp Base].	Default: Min/Max: Units:	Read Only 0.00 / 100.00 %		Real	87, 93
		1035	**[VltReg Ki Pct]** Internal proportional gain value, original Par 88 [Volt Reg Ki], percentage of Par 94 [Vlt Reg Ki Base].	Default: Min/Max: Units:	Read Only 0.00 / 100.00 %		Real	88, 94

Table 3 - Load Control File (continued)

File	Group	No.	Parameter Name & Description See page 20 for symbol descriptions	Values		Data Type	Related
LOAD CONTROL	Test Generator	58	**[TstGen Output]** Allows you to select a simulated parameter as the output for the test generator. The test generator is used to manually tune the regulators. It consists of a square wave generator whose frequency, offset and amplitude can be manipulated. • "NotConnected" - No internal parameters defined by the generator. • "Current Ref" - The output of the generator defines the reference value of the current. 100% corresponds to Par 179 [Load Rated Curr]. • "Ramp Ref" - The output of the generator defines the ramp reference value. 100% corresponds to the value specified in Par 175 [Load Rated Volt]. This is the value immediately before the Ramp function. • "Volt Ref" - The output of the generator defines the voltage reference value. This is the value immediately before the Voltage Regulator function.	Default: Options:	0 = "NotConnected" 0 = "NotConnected" 1 = "Reserved" 2 = "Current Ref" 3 = "Reserved" 4 = "Ramp Ref" 5 = "Volt Ref"	16-bit Int	59, 60, 61
		59	**[TstGen Frequency]** Output frequency of the test generator.	Default: Min/Max: Units:	0.10 0.10 / 62.50 Hz	Real	58
		60	**[TstGen Amplitude]** Amplitude of the delta signal produced by the test generator.	Default: Min/Max: Units:	0.00 0.00 / 200.00 %	Real	58
		61	**[TstGen Offset]** Offset of the test generator.	Default: Min/Max: Units:	0.00 –/+200.00 %	Real	58

ATTENTION: Uncontrolled machine operation could result during these tests and may cause equipment damage or personal injury. For a field or non-motor load, verify that the load is isolated from other components in the system. If the field controller is connected to a motor field, verify that the motor armature circuit is disconnected.

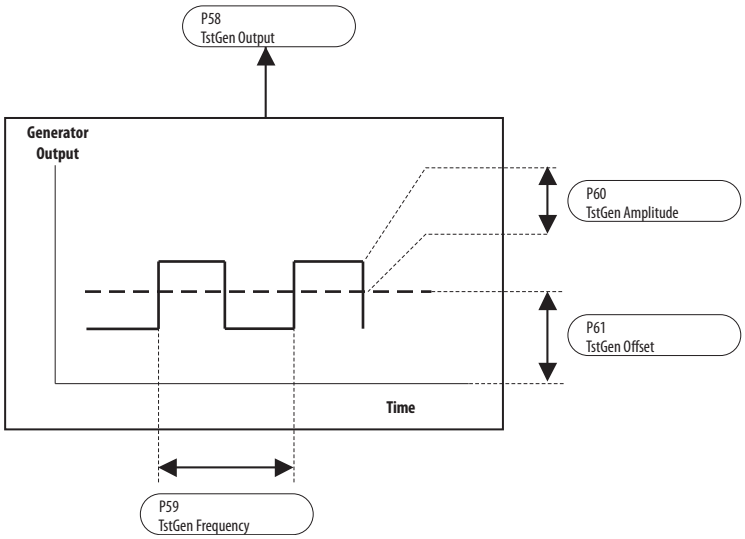

Table 3 - Load Control File (continued)

File	Group	No.	Parameter Name & Description See page 20 for symbol descriptions	Values		Data Type	Related
LOAD CONTROL	Test Generator	166	**[Alpha Test]** Diagnostic test mode that selects the SCR bridge to activate. The SCR firing angles are specified by Par 167 [Test Angle]. **Important:** Alpha Test is an open loop diagnostic tool that requires a hardware Enable input be wired and functional at the terminal block. Reading Alpha Test Mode on page 131 is required before completing this test. 0 = Off 1 = Fwd 2 = Rev	Default: Options:	0 = "Off" 0 = "Off" 1 = "Fwd" 2 = "Rev"	16-bit Int	167
		167	**[Test Angle]** Sets the SCR firing angle for the Forward and Reverse tests. 180 deg = minimum voltage, 5 deg = maximum voltage. This parameter is only changeable while the Alpha Test is selected.	Default: Min/Max: Units:	180.0 5.0 / 180.0 deg	Real	166
		213	**[SCR Diag Test En]** Enables/Disables the SCR diagnostic tests. Both tests can be enabled simultaneously, but the "Shorted SCR" test will take precedence over the "Open SCR" test. A bit set to "1" is enabled.				214, 215, 216, 217, 218
		214	**[SCR Diag Status]** Bits 0…11 indicate which SCR or SCR pair is in error. The type of error is indicated in bits 13…15. Only one type of error is shown at a time. The precedence of errors is "Shorted SCR," "OpenSCR Trip," and "OpenSCR Warn." Note that "OpenSCR Warn" is independent from a SCR trip configured as an alarm. This parameter is only active when bit 0 "OpenSCR Tst" or bit 1 "ShortSCR Tst" of Par 213 is set to 1 "Enabled." The SCR numbering shown is SCR1…SCR6 for the forward power bridge and SCR11…SCR16 for the reverse bridge. In the standard field controller, SCR*x* corresponds to the SCR package labeled KG*x* and SCR1*x* to the package labeled KG0*x*. See the appropriate PowerFlex DC Drive Hardware Service Manual for your drive frame size for instructions on replacing SCR modules. For frame A drives, see 20P-TG001. For frame B drives, see 20P-TG002.				213, 215, 216, 217, 218

ATTENTION: Allow only qualified electrical personnel familiar with the construction and operation of this equipment and the hazards involved to perform this test. Failure to observe this precaution could result in equipment damage and/or bodily injury.

ATTENTION: This is an open loop test, disconnect the primary load and replace it with light bulbs or other suitable resistive load. Failure to observe this precaution could result in machine damage and/or bodily injury.

ATTENTION: Uncontrolled machine operation could result with a device connected during these tests and may cause personal injury and/or equipment damage. Verify that the device is not connected to a motor armature circuit before enabling these test modes.

Options	Reserved	Reserved	Reserved	Reserved	Reserved	Reserved	Reserved	Reserved	Reserved	Reserved	Reserved	Reserved	Reserved	Reserved	ShortSCR Tst	OpenSCR Tst
Default	x	x	x	x	x	x	x	x	x	x	x	x	x	x	0	0
Bit	15	14	13	12	11	10	9	8	7	6	5	4	3	2	1	0

Options	Shorted SCR	OpenSCR Trip	OpenSCR Warn	Reserved	SCR 16	SCR 15	SCR 14	SCR 13	SCR 12	SCR 11	SCR 6	SCR 5	SCR 4	SCR 3	SCR 2	SCR 1
Default	0	0	0	x	0	0	0	0	0	0	0	0	0	0	0	0
Bit	15	14	13	12	11	10	9	8	7	6	5	4	3	2	1	0

Table 3 - Load Control File (continued)

File	Group	No.	Parameter Name & Description See page 20 for symbol descriptions	Values		Data Type	Related
LOAD CONTROL	Test Generator	215 A	**[OpenSCR WarnLvl]** Sets the open SCR warning level. This value determines when Par 214 [SCR Diag Status], bit 13 "OpenSCR Warn" is set. This parameter is only active when Par 213 [SCR Diag Test En], bit 0 "OpenSCR Tst" is enabled.	Default: Min/Max:	1024 0 / 4096	16-bit Int	213
		216 A	**[OpenSCR Flt Cfg]** Configures the open SCR error condition. This parameter is only active when Par 213 [SCR Diag Test En], bit 0 "OpenSCR Tst" is enabled.	Default: Options:	0 = "Ignore" 0 = "Ignore" 1 = "Alarm" 2 = "Fault"	16-bit Int	213
		217 A	**[OpenSCR Threshld]** Sets the open SCR error level and when exceeded begins to accumulate. This parameter is only active when Par 213 [SCR Diag Test En], bit 0 "OpenSCR Tst" is enabled.	Default: Min/Max: Units:	80 0 / 100 %	16-bit Int	213
		218 A	**[OpenSCR Trip Lvl]** Sets the open SCR trip level. The action taken by the field controller when as open SCR trip occurs is determined by Par 216 [OpenSCR Flt Cfg]. This parameter is only active when Par 213 [SCR Diag Test En], bit 0 "OpenSCR Tst" is enabled.	Default: Min/Max:	2048 0 / 4096	16-bit Int	213, 216

Table 4 - Volt Command File

File	Group	No.	Parameter Name & Description See page 20 for symbol descriptions	Values		Data Type	Related
VOLT COMMAND	Limits	1	**[Minimum Voltage]** Defines the minimum operating voltage of the field controller. This value applies to both polarities of field controller voltage. A voltage below the value set in [Minimum Voltage] is not possible, regardless of the set reference value. If the value of [Minimum Voltage] is changed, Pars 5 [Min Volt Fwd] and 6 [Min Volt Rev] are set to the same value. If either Par 5 [Min Volt Fwd] or Par 6 [Min Volt Rev] is changed later, the last change is valid.	Default: Min/Max: Units:	0 0 / Par 175 [Load Rated Volt] V	32-bit Int	5, 6
		2	**[Maximum Voltage]** Defines the maximum operating voltage of the field controller. This value applies to both polarities of field controller voltage. The value of this parameter is input to the voltage regulator and therefore takes into account the reference value that comes from the ramp as well as the polarity. If the value of [Maximum Voltage] is changed, Pars 3 [Max Volt Fwd] and 4 [Max Volt Rev] are set to the same value. If either Par 3 [Max Volt Fwd] or Par 4 [Max Volt Rev] is changed later, the last change is valid.	Default: Min/Max: Units:	240 0 / Par 175 [Load Rated Volt] V	32-bit Int	3, 4
		3	**[Max Volt Fwd]** Defines the maximum voltage for positive field controller operation. The value of [Max Volt Fwd] affects the input of the voltage regulator and therefore takes into account both the reference values that come from the ramp as well as the polarity.	Default: Min/Max: Units:	240 0 / Par 175 [Load Rated Volt] V	32-bit Int	2
		4	**[Max Volt Rev]** Defines the maximum voltage for negative field controller operation. The value of [Max Volt Rev] affects the input of the voltage regulator and therefore takes into account both the reference values that come from the ramp as well as the polarity.	Default: Min/Max: Units:	240 0 / Par 175 [Load Rated Volt] V	32-bit Int	2
		5	**[Min Volt Fwd]** Defines the minimum voltage for positive field controller operation. Voltage reference values below the value in this parameter are clamped until the reference exceeds this limit.	Default: Min/Max: Units:	0 0 / Par 175 [Load Rated Volt] V	32-bit Int	
		6	**[Min Volt Rev]** Defines the minimum voltage for negative field controller operation. Voltage reference values below the value in this parameter are clamped until the reference exceeds this limit.	Default: Min/Max: Units:	0 0 / Par 175 [Load Rated Volt] V	32-bit Int	1

Table 4 - Volt Command File (continued)

File	Group	No.	Parameter Name & Description See page 20 for symbol descriptions	Values		Data Type	Related
VOLT COMMAND	Discrete Volts	154 155 156 157 158 159 160	**[Preset Volt 1]** **[Preset Volt 2]** **[Preset Volt 3]** **[Preset Volt 4]** **[Preset Volt 5]** **[Preset Volt 6]** **[Preset Volt 7]** Provides an internal fixed voltage command value. In bipolar mode, direction is commanded by the sign of the reference. Notes: [Preset Volt 1] cannot be directly selected by the "Volt Sel *x*" digital input selections. However, Par 154 [Preset Volt 1] can be directed to Par 42 [Trim Ramp] by using the Scale Block parameters. See Reference Control on page 138 for more information.	Default: Default: Default: Default: Default: Default: Default: Min/Max: Units:	50 100 200 300 400 500 520 -/+6000 V	16-bit Int	
		266	**[Jog Voltage]** Reference value for jog mode. Notes: This parameter can be assigned to an analog input. See Reference Control on page 138 for more information.	Default: Min/Max: Units:	100 -/+6000 V	16-bit Int	
		267	**[TB Manual Ref]** Reference value for the field controller when the Terminal Block asserts Manual reference control. Notes: This parameter can be assigned to an analog input. See Reference Control on page 138 for more information.	Default: Min/Max: Units: (1) The value of [Load Rated Volt} cannot exceed 999V	0 –/+ Par 175 [Load Rated Volt] V	16-bit Int	175
		1409	**[Jog Off Delay]** Specifies the amount of time that will elapse between removing the Jog input and commanding the main contactor to open. The amount of time specified in [Jog Off Delay] will not begin to elapse until the measured voltage feedback is less than or equal to the value of parameter 107 [Volt Zero Level]. This delay reduces the wear on the contactor when repeatedly opening and closing the Jog input over a short period of time. If a stop command is asserted before the jog off delay time has completed, the field controller will stop and the delay timer is canceled.	Default: Min/Max: Units:	1 0…10 s	16-bit Int	
	Volt References	42	**[Trim Ramp]** This value is added to the voltage reference just before the Voltage Ramp function. Notes: This parameter can be assigned to an analog input. See Reference Control on page 138 for more information.	Default: Min/Max: Units: (1) The value of [Load Rated Volt} cannot exceed 999V	0 –/+Par 175 [Load Rated Volt] V	16-bit Int	175, 378
		43	**[Trim Volt]** This value is added to the voltage reference just before the Voltage regulator (and after the Voltage Ramp function). Notes: This parameter can be assigned to an analog input. See Reference Control on page 138 for more information.	Default: Min/Max: Units: (1) The value of [Load Rated Volt} cannot exceed 999V	0 –/+ Par 175 [Load Rated Volt] V	16-bit Int	175, 379
		378	**[Trim Ramp Pct]** Trim ramp value defined as a percentage of the value defined in Par 175 [Load Rated Volt].	Default: Min/Max: Units:	0.00 –/+100.00 %	Real	42
		379	**[Trim Volt Pct]** Trim voltage reference value defined as a percentage of the of the value defined in Par 175 [Load Rated Volt].	Default: Min/Max: Units:	0.00 –/+100.00 %	Real	43
		1017	**[Volt Ratio]** Determines the voltage ratio value for the Voltage Draw function. Notes: This value can be input to the field controller digitally, or by using an analog input. See Voltage Draw Function on page 150 for more information.	Default: Min/Max:	10000 0 / 32767	16-bit Int	
	Volt Regulator	87	**[Volt Reg Kp]** Proportional gain of the voltage regulator PI block that can be adjusted while the field controller is running. Max = Par 93 x Par 175 / Par 179 Default set to a value that such that Par 1034 [VltReg Kp Pct] = 0.2%	Default: Min/Max:	Based on device current rating 0.00 / Based on device current rating	Real	93, 175, 179, 1034

Table 4 - Volt Command File (continued)

File	Group	No.	Parameter Name & Description See page 20 for symbol descriptions	Values		Data Type	Related
VOLT COMMAND	Volt Regulator	88	**[Volt Reg Ki]** Integral gain of the voltage regulator PI block that can be adjusted while the field controller is running. Max = 1000 x Par 175 x Par 94 / Par 179 Default set to a value that such that Par 1035 [Volt Reg Ki Pct] = 0.1%	Default: Min/Max: Units:	Based on device current rating 0.00 / Based on device current rating s^{-1}	Real	94, 175, 179, 1035
		95 A	**[Vlt Reg Pos Lim]** Positive Voltage Regulator output limit. When this limit is active the positive integrator portion of the PI regulator is held to prevent windup.	Default: Min/Max: Units:	100.00 –/+250.00 %	Real	96
		96 A	**[Vlt Reg Neg Lim]** Negative Voltage Regulator output limit. When this limit is active the negative integrator portion of the PI regulator is held to prevent windup.	Default: Min/Max: Units:	–100.00 –/+250.00 %	Real	95
		99 A	**[Vlt Reg Kp Outpt]** Displays the active proportional coefficient of the voltage regulator as a percentage of the value defined in Par 93 [Vlt Reg Kp Base].	Default: Min/Max:	Read Only 0.00 / 9999.00	Real	87, 93
		100 A	**[Vlt Reg Ki Outpt]** Displays the active integral coefficient of the voltage regulator as a percentage of the value defined in Par 94 [Vlt Reg Ki Base].	Default: Min/Max: Units:	Read Only 0.00 / 9999.00 s^{-1}	Real	88, 94
		101 A	**[Volt Thresh Pos]** Threshold voltage for the field controller above or below which the value of Par 393 [Volt Threshold] changes. When the voltage of the drive exceeds the value of this parameter, Par 393 [Volt Threshold] displays "Above Thresh" (0). When the voltage of the field controller is below the value of this parameter, Par 393 [Volt Threshold] displays "Below Thresh" (1). See Voltage Threshold Indicators on page 148 for more information.	Default: Min/Max: Units:	1000 1 / 6000 V	16-bit Int	393
		102 A	**[Volt Thresh Neg]** Threshold voltage for the field controller above or below which the value of Par 393 [Volt Threshold] changes. When the voltage of the field controller exceeds the value specified in this parameter, Par 393 [Volt Threshold] displays "Above Thresh" (0). When the voltage of the field controller is below this threshold, Par 393 [Volt Threshold] displays "Below Thresh" (1). See Voltage Threshold Indicators on page 148 for more information.	Default: Min/Max: Units:	1000 1 / 6000 V	16-bit Int	393
		103 A	**[Threshold Delay]** Amount of time that must elapse before indication that the field controller voltage is above the value set in Par 101 [Volt Thresh Pos] or below the value set in Par 102 [Volt Thresh Neg]. See Voltage Threshold Indicators on page 148 for more information.	Default: Min/Max: Units:	100 0 / 65535 ms	16-bit Int	393
		104 A	**[At Voltage Error]** Defines the voltage above and below the voltage reference (in Par 118 [Volt Reg In]) at which the value of Par 394 [At Voltage] changes. When the difference between the voltage reference and the actual voltage is greater than the value of this parameter, Par 394 [At Voltage] displays "Not Equal" (0). When the difference between the voltage reference and the actual voltage is less than the value of this parameter, Par 394 [At Voltage] displays "Equal" (1). See Voltage Threshold Indicators on page 148 for more information.	Default: Min/Max: Units:	100 1 / 6000 V	16-bit Int	394
		105 A	**[At Voltage Delay]** Amount of time that must elapse before indication that the field controller voltage reference is within the range specified in Par 104 [At Voltage Error] occurs. See Voltage Threshold Indicators on page 148 for more information.	Default: Min/Max: Units:	100 0 / 65535 ms	16-bit Int	394
		106 A	**[Ref Zero Level]** Voltage level below which voltage references are equal to zero volts. Switch used in the Voltage Zero function. See Voltage Threshold Indicators on page 148 for more information.	Default: Min/Max: Units:	20 1 / 6000 V	16-bit Int	123, 124, 125, 126

Table 4 - Volt Command File (continued)

File	Group	No.	Parameter Name & Description See page 20 for symbol descriptions	Values		Data Type	Related
VOLT COMMAND	Volt Regulator	107 A	**[Volt Zero Level]** Voltage below which the actual voltage is considered equal to zero. When a Stop command is issued and actual voltage goes below this value, field controller output is disabled. The value applies to both operational directions for four quadrant field controllers. See Voltage Zero Function on page 150 for more information. 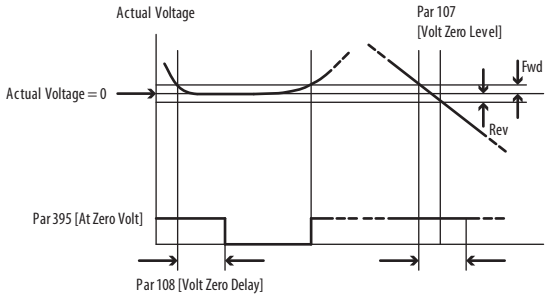 	Default: Min/Max: Units:	20 1 / 6000 V	16-bit Int	395, 1027
		108 A	**[Volt Zero Delay]** Amount of time that must elapse after the actual voltage goes below the value set in Par 107 [Volt Zero Level] before Par 395 [At Zero Volt] changes state. See Voltage Zero Function on page 150 for more information.	Default: Min/Max: Units:	100 0 / 65535 ms	16-bit Int	395, 1027
		123 A	**[Vlt Zero I En]** Enables/Disables the output of the integral section of the voltage regulator. Used in the Zero Voltage function. • "Enabled" = The output of the integral section of the voltage regulator is set to zero when the voltage reference and the voltage feedback are equal to zero. The I component is enabled when a reference value is entered to restart voltage increase. • "Disabled" = Disables the output of the integral section of the voltage regulator. See Voltage Zero Function on page 150 for more information.	Default: Options:	0 = "Disable" 0 = "Disable" 1 = "Enable"	16-bit Int	
		124 A	**[Vlt Ref Zero En]** This parameter is only active when Par 125 [Vlt Zero P En] = 1 "Enabled". Used in the Zero Voltage function. • "Enabled" = The proportional gain, equal to Par 126 [Vlt Zero P Gain] at zero voltage, is equal to Par 87 [Volt Reg Kp] when the voltage reference is higher than the value defined in Par 106 [Ref Zero Level]. • "Disabled" = The proportional gain, equal to Par 126 [Vlt Zero P Gain] at zero volts, is equal to the value in Par 87 [Volt Reg Kp] when the voltage reference or the actual voltage is higher than the value defined in Par 106 [Ref Zero Level]. See Voltage Zero Function on page 150 for more information.	Default: Options:	0 = "Disable" 0 = "Disable" 1 = "Enable"	16-bit Int	
		125 A	**[Vlt Zero P En]** Enables/Disables the output of the proportional section of the voltage regulator. Used in the Zero Voltage function. "Enabled" = When both the voltage reference value and the actual voltage value = 0, the proportional gain value in Par 126 [Vlt Zero P Gain] is active after the delay time defined in Par 108 [Volt Zero Delay]. Used in the Zero Voltage function. "Disabled" = The voltage regulator keeps its proportional gain component when the drive is at zero voltage. See Voltage Zero Function on page 150 for more information.	Default: Options:	0 = "Disable" 0 = "Disable" 1 = "Enable"	16-bit Int	

Table 4 - Volt Command File (continued)

File	Group	No.	Parameter Name & Description See page 20 for symbol descriptions	Values		Data Type	Related
VOLT COMMAND	Volt Regulator	126 A	**[Vlt Zero P Gain]** The proportional gain of the voltage regulator that is only active when the value of the voltage reference and actual voltage = 0. This parameter is only active when Par 125 [Vlt Zero P En] = 1 "Enabled". Used in the Zero Voltage function. See Voltage Zero Function on page 150 for more information.	Default: Min/Max: Units:	3.00 0.00 / 100.00 %	Real	
		238	**[VltOut FiltGain]** First order lead/lag filter gain on the voltage regulator output signal.	Default: Min/Max:	1.000 0.000 / 2.000	Real	239
		239	**[VltOut FiltBW]** First order lead/lag filter bandwidth on the voltage regulator output signal.	Default: Min/Max: Units:	0 0 / 2000 ms	16-bit Int	238
		348 A	**[Lock Volt Integ]** Enables or disables the integral (I) function of the voltage regulator. • "Not active" = The integral component of the voltage regulator is enabled. • "Active" = The integral component of the voltage regulator is disabled.	Default: Options:	1 = "Not active" 0 = "Active" 1 = "Not active"	16-bit Int	
		444 A	**[Vlt Reg P Filter]** Time constant used by the filter for the Voltage Feedback circuit.	Default: Min/Max: Units:	0 0 / 1000 ms	16-bit Int	121, 122
		643	**[VltReg AntiBckup]** Allows control of over-shoot/under-shoot in the step response of the voltage regulator. This parameter has no affect on the field controller's response to load changes. A value of zero disables this feature.	Default: Min/Max:	0.0 0.0 / 0.50	Real	

Table 5 - Dynamic Control File

File	Group	No.	Parameter Name & Description See page 20 for symbol descriptions	Values		Data Type	Related
DYNAMIC CONTROL	Control Config	241	**[Vlt Cur Mode Sel]** Configures the field controller for voltage or current mode of operation. • "Zero Cur Ref" = The field controller operates as a current regulator with the current reference (Par 14 [Selected CurrRef]) forced to zero. • "Volt Reg" = The field controller operates as a voltage regulator with the reference = Par 236 [Vlt Reg Out Pct]. • "Curr Reg" = The field controller operates as a current regulator with the reference equal to the value of Par 39 [Current Ref]. • "Dig Curr Reg" = The field controller operates as a current regulator with the digital reference received from the Fiber-optic Interface circuit board and set in Par 862 [Digital Curr Ref]. This option is not used when the field controller is used in standalone mode. See Voltage / Current Mode Selection on page 151 for more detailed information.	Default: Options:	2 = "Curr Reg" 0 = "Zero Cur Ref" 1 = "Volt Reg" 2 = "Curr Reg" 3 = "Dig Curr Reg"	16-bit Int	14, 39, 236, 862
		242	**[Arm En Flux Pct]** Configures the level of current required to complete a SCR bridge change (positive or negative) as a percentage of Par 179 [Load Rated Curr].	Default: Min/Max: Units:	50 10 / 100 %	16-bit Unit	179
	Ramp Rates	18	**[Ramp Type Select]** Determines the type of ramp used. • 0 "Linear" = Linear ramp • 1 "S shaped" = S–shaped ramp	Default: Options:	0 = "Linear" 0 = "Linear" 1 = "S shaped"	16-bit Int	
		19	**[S Curve Time]** S-shaped ramp time constant. The value of this parameter is added to the time of the linear accel and decel ramps, regardless of voltage changes. Approximately half of the specified time is added at the beginning and half at the end of the accel and decel ramps. When the value of [S Curve Time] is changed, Pars 665 and 667 [S Curve Accel *x*] and 666 and 668 [S Curve Decel *x*] are set to the same value. If any of parameters 665. . .668 are changed later, the last change is valid. See S-curve Configuration on page 144 for more information.	Default: Min/Max: Units:	1.00 0.10 / 15.00 s	Real	18, 665, 666, 667, 668
		20	**[Ramp Delay]** Defines a ramp delay time when the ramp is active. Works with par [Digital Out*x* Sel] set to 6 "Ramp Pos" or 7 "Ramp Neg". 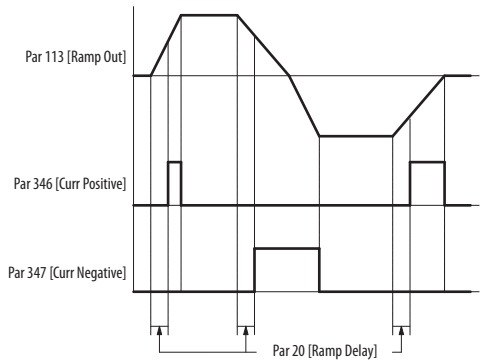 	Default: Min/Max: Units:	100 0 / 65535 ms	16-bit Int	113, 346, 347
		22	**[MOP Accel Time]** The acceleration rate for the MOP reference in response to a digital input. The MOP acceleration rate = Par 2 [Maximum Voltage] / Par 22 [MOP Accel Time]. If "0" is entered in this parameter, the ramp output directly follows the reference value.	Default: Min/Max: Units:	10 0 / 65535 s	16-bit Int	2
		24	**[Accel Time 2]** Sets the rate of acceleration for linear ramp 2. Acceleration rate for ramp 2 = Par 2 [Maximum Voltage] / Par 24 [Accel Time 2].	Default: Min/Max: Units:	10 0 / 65535 s	16-bit Int	2

Table 5 - Dynamic Control File (continued)

File	Group	No.	Parameter Name & Description See page 20 for symbol descriptions	Values		Data Type	Related
DYNAMIC CONTROL	Ramp Rates	30	**[MOP Decel Time]** The deceleration rate for the MOP reference in response to a digital input. The MOP deceleration rate = Par 2 [Maximum Voltage] / Par 30 [MOP Decel Time].	Default: Min/Max: Units:	10 0 / 65535 s	16-bit Int	2
		32	**[Decel Time 2]** Sets the rate of deceleration for linear ramp 2. Deceleration rate for ramp 2 = Par 2 [Maximum Voltage] / Par 32 [Decel Time 2].	Default: Min/Max: Units:	10 0 / 65535 s	16-bit Int	2
		245	**[Volt Ramp En]** Enables/Disables the ramp function. The Ramp Reference block is bypassed when this parameter is set to 0 "Disabled".	Default: Options:	0 = "Disabled" 0 = "Disabled" 1 = "Enabled"	16-bit Int	
		344	**[Zero Ramp Output]** Enables/Disables the ramp function. • "Active" = The ramp output is disabled and Pars 113 [Ramp Out] and 114 [Ramp Out Pct] are immediately set to zero. • "Not Active" = The ramp output is enabled and Pars 113 [Ramp Out] and 114 [Ramp Out Pct] follow the Ramp Reference block commands.	Default: Options:	1 = "Not Active" 0 = "Active" 1 = "Not Active"	16-bit Int	
		345	**[Zero Ramp Input]** Activates or deactivates the ramp input. • "Active" = The ramp input is not active and Pars 110 [Ramp In] and 111 [Ramp In Pct] = 0. • "Not Active" = The ramp input is activated and Pars 110 [Ramp In] and 111 [Ramp In Pct] correspond to the set reference.	Default: Options:	1 = "Not Active" 0 = "Active" 1 = "Not Active"	16-bit Int	110, 111
		373	**[Freeze Ramp]** Determines whether the last ramp output reference value is retained or whether the ramp output reference value is active. • "Active" = The value of the ramp output at the time of activation is retained irrespective of any possible reference value changes at the ramp input. • "Not Active" = The ramp output value follows the ramp input value according to the Ramp Reference Block commands.	Default: Options:	1 = "Not Active" 0 = "Active" 1 = "Not Active"	16-bit Int	
		660	**[Accel Time 1]** Sets the rate of acceleration for linear ramp 1. Acceleration rate for ramp 1 = Par 2 [Maximum Voltage] / Par 660 [Accel Time 1].	Default: Min/Max: Units:	10 0 / 65535 s	16-bit Int	2
		662	**[Decel Time 1]** Sets the rate of deceleration for linear ramp 1. Deceleration rate for ramp 1 = Par 2 [Maximum Voltage] / Par 662 [Decel Time 1].	Default: Min/Max: Units:	10 0 / 65535 s	16-bit Int	2
		665	**[S Curve Accel 1]** Amount of time (approximately half at the start and half at the end) applied to the S-curve during Accel 1 changes. When Par 19 [S Curve Time] is changed this parameter is automatically set to the same value. For asymmetrical S-curve ramps, set this parameter after [S Curve Time] is changed. See S-curve Configuration on page 144 for more information.	Default: Min/Max: Units:	1.00 0.10 / 15.00 s	Real	19
		666	**[S Curve Decel 1]** Amount of time (approximately half at the start and half at the end) applied to the S-curve during Decel 1 changes. When Par 19 [S Curve Time] is changed this parameter is automatically set to the same value. For asymmetrical S-curve ramps, set this parameter after [S Curve Time] is changed. See S-curve Configuration on page 144 for more information.	Default: Min/Max: Units:	1.00 0.10 / 15.00 s	Real	19
		667	**[S Curve Accel 2]** Amount of time (approximately half at the start and half at the end) applied to the S-curve during Accel 2 changes. When Par 19 [S Curve Time] is changed this parameter is automatically set to the same value. For asymmetrical S-curve ramps, set this parameter after [S Curve Time] is changed. See S-curve Configuration on page 144 for more information.	Default: Min/Max: Units:	1.00 0.10 / 15.00 s	Real	19

Table 5 - Dynamic Control File (continued)

File	Group	No.	Parameter Name & Description See page 20 for symbol descriptions	Values		Data Type	Related
DYNAMIC CONTROL	Ramp Rates	668 A	**[S Curve Decel 2]** Amount of time (approximately half at the start and half at the end) applied to the S-curve during Decel 2 changes. When Par 19 [S Curve Time] is changed this parameter is automatically set to the same value. For asymmetrical S-curve ramps, set this parameter after [S Curve Time] is changed. See S-curve Configuration on page 144 for more information.	Default: Min/Max: Units:	1.00 0.10 / 15.00 s	Real	19
		1410	**[Jog Ramp Time]** Sets the rate of acceleration and deceleration while the Jog function is active. The Jog rate = Par 2 [Maximum Voltage] / Par 1410 [Jog Ramp Time].	Default: Min/Max: Units:	10 0 / 65535 s	16-bit Int	2
	Load Limits	13 A	**[Curr Red CurLim]** The current limit reduction, defined as a percentage of the value defined in Par 179 [Load Rated Curr] when Par 342 [Curr Reduction] is set to 1 "Active".	Default: Min/Max: Units:	100 0 / 200 %	16-bit Int	342
		715 A	**[Curr Limit Type]** This parameter determines the response of the field controller during a current limiting condition. • "C Lim PosNeg" = The active positive current limit is set by the value defined in Par 7 [Current Limit] and the active negative current limit is set by the value defined in Par 9 [Current Lim Neg]. • "C Lim MtrGen" = With this option the following three conditions apply: 1. If the output voltage is greater than +1% of Par 175 [Load Rated Volt], the active positive current limit is set by the value defined in Par 8 [Current Lim Pos] and the active negative current limit is set by the value defined in Par 9 [Current Lim Neg]. 2. If the output voltage is less than –1% of Par 175 [Load Rated Volt] the active positive current limit is set by the value defined in Par 9 [Current Lim Neg] and the active negative current limit is set by the value defined in Par 8 [Current Lim Pos]. 3. If the output voltage is greater than –1% of Par 175 [Load Rated Volt] and less than +1% of Par 175 [Load Rated Volt] the active positive and negative current limits are set by the value defined in Par 8 [Current Lim Pos].	Default: Options:	0 = "C Lim PosNeg" 0 = "C Lim PosNeg" 1 = "C Lim MtrGen"	16-bit Int	7, 8, 9, 175
	Stop Modes	38 A	**[Fast Stop Time]** The amount of time to decelerate the field controller to a complete stop and disable the field controller. The deceleration rate for Fast stop = [Maximum Voltage] / [Fast Stop Time]. This feature can be used when [Digital In*x* Sel] is set to 30 "Fast Stop" or when certain alarms are configured for "Fast Stop". See Pars 354 [Aux Inp Flt Cfg] and 365 [OverTemp Flt Cfg].	Default: Min/Max: Units:	10 0 / 65535 s	16-bit Int	354, 365
		627 A	**[Vlt 0 Trip Delay]** The amount of time that will elapse after the field controller reaches zero voltage before it is disabled.	Default: Min/Max: Units:	0 0 / 40000 ms	16-bit Int	
	Restart Modes	1344	**[Start At Powerup]** Enables/Disables the ability to issue a "Run" command and automatically resume running at commanded voltage after field controller input power is restored and the time in Par 1345 [Powerup Delay] has elapsed. Requires a digital input configured for "Run" and a valid start condition. See Start at Powerup on page 152 for more information. **ATTENTION:** Equipment damage and/or personal injury may result if this parameter is used in an inappropriate application. Do not use this function without considering applicable local, national and international codes, standards, regulations or industry guidelines.	Default: Options:	0 = "Disabled" 0 = "Disabled" 1 = "Enabled"	16-bit Int	1345
		1345	**[Powerup Delay]** Defines the programmed delay time, in seconds, before a start command is accepted after a power up. If a "Start", "Run" or "Stop" command is asserted before the time in this parameter expires, the "Start At Powerup" function will be aborted. See Start at Powerup on page 152 for more information.	Default: Min/Max: Units:	1 1 / 10800 s	16-bit Int	1344

Table 5 - Dynamic Control File (continued)

File	Group	No.	Parameter Name & Description See page 20 for symbol descriptions	Values		Data Type	Related
DYNAMIC CONTROL	Adaptv Regulator	181 A	**[Adaptive Vlt En]** Enables/Disables adaptive voltage regulation. The adaptive voltage regulator function enables different gains of the voltage regulator depending on the voltage or another variable (Par 183 [Adaptive Ref]). This allows adaptation of the voltage regulator to your specific application. When adaptive voltage regulation is disabled, the regulator operates based on the settings in the individual regulation parameters. See Start at Powerup on page 152 for more information.	Default: Options:	0 = "Disabled" 0 = "Disabled" 1 = "Enabled"	16-bit Int	182, 183
		182 A	**[Adaptive Reg Typ]** Selects the type of regulation used. • "Voltage" = The regulator parameters follow a voltage reference. • "Adaptive Ref" = The regulator parameters follow the reference produced by Par 183 [Adaptive Ref]. See Adaptive Voltage Regulation on page 146 for more information.	Default: Options:	0 = "Voltage" 0 = "Voltage" 1 = "Adaptive Ref"	16-bit Int	183
		183 A	**[Adaptive Ref]** The variable reference that the voltage regulator parameter will follow when Par 182 [Adaptive Reg Typ] = 1 "Adaptive Ref". See Adaptive Voltage Regulation on page 146 for more information.	Default: Min/Max: Units:	1000 –/+6000 V	16-bit Int	182
		184 A	**[Adaptive Vlt 1]** A percentage of Par 175 [Load Rated Volt] or the maximum value of Par 183 [Adaptive Ref]. Parameter set 1 is valid below the value set in this parameter and parameter set 2 is valid above the value set in this parameter. The transition between the values is defined by Par 186 [Adaptive Joint 1]. See Adaptive Voltage Regulation on page 146 for more information.	Default: Min/Max: Units:	20.34 0.00 / 200.00 %	Real	183, 186
		185 A	**[Adaptive Vlt 2]** A percentage of Par 175 [Load Rated Volt] or the maximum value of Par 183 [Adaptive Ref]. Parameter set 2 is valid below the value set in this parameter and parameter set 3 is valid above the value set in this parameter. The transition between the values is defined by Par 187 [Adaptive Joint 2]. See Adaptive Voltage Regulation on page 146 for more information.	Default: Min/Max: Units:	40.69 0.00 / 200.00 %	Real	183, 187
		186 A	**[Adaptive Joint 1]** Defines a range above and below the value set in Par 184 [Adaptive Vlt 1] within which there is a linear change in gain from parameter set 1 to parameter set 2 to prevent jumps in the adaptive voltage regulator. The value in this parameter is defined as percentage of the value defined in Par 175 [Load Rated Volt]. See Adaptive Voltage Regulation on page 146 for more information.	Default: Min/Max: Units:	6.11 0.00 / 200.00 %	Real	184
		187 A	**[Adaptive Joint 2]** Defines a range above and below the value set in Par 185 [Adaptive Vlt 2] with in which there is a linear change in gain from parameter set 2 to parameter set 3 to prevent jumps in the adaptive voltage regulator. The value in this parameter is defined as percentage of the value defined in Par 175 [Load Rated Volt]. See Adaptive Voltage Regulation on page 146 for more information.	Default: Min/Max: Units:	6.11 0.00 / 200.00 %	Real	185
		188 A	**[Adaptive P Gain1]** Proportional gain for the range from zero to the value set in Par 184 [Adaptive Vlt 1]. The value in this parameter is defined as percentage of the value defined in Par 93 [Vlt Reg Kp Base]. See Adaptive Voltage Regulation on page 146 for more information.	Default: Min/Max: Units:	10.00 0.00 / 100.0 %	Real	93, 184
		189 A	**[Adaptive I Gain1]** Integral gain for the range from zero to Par 184 [Adaptive Vlt 1]. The value in this parameter is defined as percentage of the value defined Par 94 [Vlt Reg Ki Base]. See Adaptive Voltage Regulation on page 146 for more information.	Default: Min/Max: Units:	1.00 0.00 / 100.00 %	Real	94, 184

Table 5 - Dynamic Control File (continued)

File	Group	No.	Parameter Name & Description See page 20 for symbol descriptions	Values		Data Type	Related
DYNAMIC CONTROL	Adaptv Regulator	190 A	**[Adaptive P Gain2]** Proportional gain for the range of values defined beginning with the value of Par 184 [Adaptive Vlt 1] to the value defined in Par 185 [Adaptive Vlt 2]. The value in this parameter is defined as percentage of the value defined Par 93 [Vlt Reg Kp Base]. See Adaptive Voltage Regulation on page 146 for more information.	Default: Min/Max: Units:	10.00 0.00 / 100.00 %	Real	93, 184, 185
		191 A	**[Adaptive I Gain2]** Integral gain for the range of values defined beginning with the value of Par 184 [Adaptive Vlt 1] to the value defined in Par 185 [Adaptive Vlt 2]. The value in this parameter is defined as percentage of the value defined Par 94 [Vlt Reg Ki Base]. See Adaptive Voltage Regulation on page 146 for more information.	Default: Min/Max: Units:	1.00 0.00 / 100.00 %	Real	94, 184, 185
		192 A	**[Adaptive P Gain3]** Proportional gain for the range of values beginning above the value defined in Par 185 [Adaptive Vlt 2]. The value in this parameter is defined as percentage of the value defined Par 93 [Vlt Reg Kp Base]. See Adaptive Voltage Regulation on page 146 for more information.	Default: Min/Max: Units:	10.00 0.00 / 100.00 %	Real	93, 185
		193 A	**[Adaptive I Gain3]** Integral gain for the range of values beginning above the value defined in Par 185 [Adaptive Vlt 2]. The value in this parameter is defined as percentage of the value defined Par 94 [Vlt Reg Ki Base]. See Adaptive Voltage Regulation on page 146 for more information.	Default: Min/Max: Units:	1.00 0.00 / 100.00 %	Real	94, 185

Table 6 - Applications File

File	Group	No.	Parameter Name & Description See page 20 for symbol descriptions	Values		Data Type	Related
APPLICATIONS	PI Control	695 A	**[PI Steady Thr]** Feed–forward threshold for PI. • If the value if Par 758 [Feed Fwd PID] is less than the value of Par 695 [PI Steady Thr] the integral regulation will be locked and the proportional gain assumes the value set in Par 793 [PI Init Prop Gn]. • When the value of Par 758 [Feed Fwd PID] exceeds the value of Par 695 [PI Steady Thr], the integral regulation with the gain set in Par 734 [PI Init Intgl Gn] will be enabled. • The Proportional / Integral (PI) block will maintain the gain values specified in Pars 793 [PI Init Prop Gn] and 734 [PI Init Intgl Gn] for the time specified in Par 731 [PID Steady Delay]; once this time delay has elapsed, the values of [PI Init Prop Gn] and [PI Init Intgl Gn] will be brought automatically to the values specified in Pars 765 [PI Prop Gain PID] and 764 [PI Integral Gain], respectively.	Default: Min/Max:	0 0 / 10000	16-bit Int	758
		731 A	**[PID Steady Delay]** The amount of time for which the gains in Pars 793 [PI Init Prop Gn] and 734 [PI Init Intgl Gn] will remain enabled after feed–forward has exceeded the threshold value defined in Par 695 [PI Steady Thr].	Default: Min/Max: Units:	0 0 / 60000 ms	16-bit Int	695, 734, 793
		734 A	**[PI Init Intgl Gn]** The initial value of the integral gain. This parameter is active when feed–forward is greater than the value defined in Par 695 [PI Steady Thr], or Par 769 [Enable PI] transitions from "0" (low) to "1" (high) and the amount of time defined in Par 731 [PID Steady Delay] has elapsed.	Default: Min/Max:	10.00 0.00 / 100.00	Real	695, 731, 769
		764 A	**[PI Integral Gain]** Integral gain of the PI block.	Default: Min/Max:	10.00 0.00 / 100.00	Real	
		765 A	**[PI Prop Gain PID]** Proportional gain of the PI block.	Default: Min/Max:	10.00 0.00 / 100.00	Real	
		769 A	**[Enable PI]** Enables/Disables the PI portion of the PID regulator. If assigned to a digital input, this parameter must be brought at a high logical level (+24V). "UserDefB b10" = PI Enable is controlled by Par 536 [UsrDefBitWrdB], bit 10.	Default: Options:	0 = "Disabled" 0 = "Disabled" 1 = "Enabled" 2 = "UserDefB b10"	16-bit Int	
		771 A	**[PI Output]** Output value of the PI block, adapted to the value between the values defined in Pars 784 [PI Upper Limit] and 785 [PI Lower Limit]. When the field controller is turned on, the value of this parameter is acquired automatically based on the value of Par 779 [PI Central v sel] x 1000.	Default: Min/Max:	Read Only 0 / 10000	16-bit Int	784, 785, 779
		776 A	**[PI Central v1]** The first value that can be selected, in Par 779 [PI Central v sel], as the initial output of the PID regulator's integral component (corresponding to initial diameter 1). The value entered in this parameter must be less than the value set in Par 784 [PI Upper Limit] and greater than the value set in Par 785 [PI Lower Limit].	Default: Min/Max:	0.00 Par 785 [PI Lower Limit] / Par 784 [PI Upper Limit]	Real	784, 785, 779
		777 A	**[PI Central v2]** The second value that can be selected, in Par 779 [PI Central v sel], as the initial output of the PID regulator's integral component (corresponding to initial diameter 2). The value entered in this parameter must be less than the value set in Par 784 [PI Upper Limit] and greater than the value set in Par 785 [PI Lower Limit].	Default: Min/Max:	0.00 Par 785 [PI Lower Limit] / Par 784 [PI Upper Limit]	Real	784, 785, 779

Table 6 - Applications File (continued)

File	Group	No.	Parameter Name & Description See page 20 for symbol descriptions	Values		Data Type	Related
APPLICATIONS	PI Control	778 A	**[PI Central v3]** The third value that can be selected, in Par 779 [PI Central v sel], as the initial output of the PID regulator's integral component (corresponding to initial diameter 3). The value entered in this parameter must be less than the value set in Par 784 [PI Upper Limit] and greater than the value set in Par 785 [PI Lower Limit]. Note: This parameter can be assigned to an analog input.	Default: Min/Max:	0.00 Par 785 [PI Lower Limit] / Par 784 [PI Upper Limit]	Real	784, 785, 779
		779 A	**[PI Central v sel]** Selects one of the four possible initial output values of the PID regulator integral component (corresponding to the initial diameter) of the PI block. • "0" = When the PI block is disabled (Par 769 [Enable PI] = "Disabled"), the last value of the integral component calculated (corresponding to roll diameter) is stored in Par 771 [PI Output]. This value is used by the PID regulator when the PI block is enabled again and the field controller is restarted. This function is useful when for any reason the field controller must be turned off or if incoming power is removed from the field controller. • "1", "2", or "3" = When the PI block is disabled (Par 769 [Enable PI] = "Disabled"), the value of [PI Output] will be set to the value of the selected parameter ("1" = 776 [PI Central v1], "2" = 777, [PI Central v2], or "3" = 778 [PI Central v3] x1000). This value is only used by the PID regulator when the field controller is powered up and Par 769 [Enable PI] is already enabled. Note: Par 779 [PI Central v sel] can be set directly from the HIM or through two digital inputs set respectively as "PI central vs0" and "PI central vs1". See Pars 780 [PI Central vs0] and 781 [PI Central vs1] for more information on this configuration.	Default: Min/Max:	1 0 / 3	16-bit Int	769, 776, 777, 778, 780, 781
		780 A	**[PI Central vs0]** When assigned to a digital input and used in combination with Par 781 [PI Central vs1], through binary selection, determines which of the four possible output values is used as the initial level of the integral component of the PI block. Par 780 / Par 781 / Selects the value in… 0 / 0 / Par 771 [PI Output] 0 / 1 / Par 776 [PI Central v1] 1 / 0 / Par 777 [PI Central v2] 1 / 1 / Par 778 [PI Central v3]	Default: Min/Max:	0 0 / 1	16-bit Int	
		781 A	**[PI Central vs1]** The output selector of the initial PI block. With the value of Par 780 [PI Central vs0] determined, through binary selection, what between the four possible settings of the integral initial level (correspondent to initial diameter) can be used. See Par 780 [PI Central vs0] for binary selections.	Default: Min/Max:	0 0 / 1	16-bit Int	
		783 A	**[PI Integr Freeze]** Locks the selections made for the integral component of the PID regulator.	Default: Options:	0 = "Off" 0 = "Off" 1 = "On"	16-bit Int	
		784 A	**[PI Upper Limit]** Defines the upper limit of the adapting block for correction of the PI block.	Default: Min/Max:	10.00 Par 785 [PI Lower Limit] / 10.00	Real	
		785 A	**[PI Lower Limit]** Defines the lower limit of the adapting block for correction of the PI block.	Default: Min/Max:	0.00 –10.00 / Par 784 [PI Upper Limit]	Real	
		793 A	**[PI Init Prop Gn]** The initial value of the proportional gain. This parameter is active when, • its value has exceeded the value of Par 695 [PI Steady Thr], • the amount of time defined in Par 731 [PID Steady Delay] has elapsed, and feed–forward is less than the value defined in Par 695 [PI Steady Thr], or • Par 769 [Enable PI] transitions from "0" (low) to "1" (high) and the amount of time defined in Par 731 [PID Steady Delay] has elapsed.	Default: Min/Max:	10.00 0.00 / 100.00	Real	695, 731, 769
	PD Control	421 A	**[PD Output PID]** Proportional / Derivative (PD) block output.	Default: Min/Max:	Read Only –/+10000	16-bit Int	

Table 6 - Applications File (continued)

File	Group	No.	Parameter Name & Description See page 20 for symbol descriptions	Values		Data Type	Related
APPLICATIONS	PD Control	766 A	**[PD Deriv Gain 1]** First derivative gain of the PD block. The value specified in this field depends on the enabling and configuration of Par 181 [Adaptive Vlt En].	Default: Min/Max:	1.00 0.00 / 100.00	Real	181
		767 A	**[PD Deriv Filter]** Time constant of the filter from the derivative portion of the PD block.	Default: Min/Max:	0 1 / 1000	16-bit Int	
		768 A	**[PD Prop Gain 1]** First proportional gain of the block PD. The value specified in this field depends on the enabling and configuration of Par 181 [Adaptive Vlt En].	Default: Min/Max:	10.00 0.00 / 100.00	Real	181
		770 A	**[Enable PD]** Enables/disables the PD portion of the PID regulator. "UserDefB b11" = PI Enable is controlled by Par 536 [UsrDefBitWrdB], bit 11. Note: This parameter can be assigned to a digital input.	Default: Options:	0 = "Disabled" 0 = "Disabled" 1 = "Enabled" 2 = "UserDefB b11"	16-bit Int	
		788 A	**[PD Prop Gain 2]** Second proportional gain of the block PD. The value specified in this field depends on the enabling and configuration of Par 181 [Adaptive Vlt En].	Default: Min/Max:	10.00 0.00 / 100.00	Real	181
		789 A	**[PD Deriv Gain 2]** Second derivative gain of the PD block. The value specified in this field depends on the enabling and configuration of Par 181 [Adaptive Vlt En].	Default: Min/Max:	1.00 0.00 / 100.00	Real	181
		790 A	**[PD Prop Gain 3]** Third proportional gain of the block PD. The value specified in this field depends on the enabling and configuration of Par 181 [Adaptive Vlt En].	Default: Min/Max:	10.00 0.00 / 100.00	Real	181
		791 A	**[PD Deriv Gain 3]** Third derivative gain of the PD block. The value specified in this field depends on the enabling and configuration of Par 181 [Adaptive Vlt En].	Default: Min/Max:	1.00 0.00 / 100.00	Real	181
	PID Control	418	**[Real FF PID]** Represents the feed–forward value which has been recalculated according to the PI correction. It will be calculated with the following formula: Par 418 [Real FF PID] = (Par 758 [Feed Fwd PID] / 1000) x Par 771 [PI Output] When either the negative or positive limit of this parameter has been reached, further increases in the value of Par 771 [PI Output] will be blocked to avoid undesirable saturation of the PID regulator. For example: When Par 758 [Feed Fwd PID] = +8000, the positive limit of Par 771 [PI Output] will be automatically set at 10000 / (8000 / 1000) = 1250.	Default: Min/Max:	Read Only –/+10000	16-bit Int	758, 771
		757 A	**[PID Clamp]** Value at which the PID error is clamped.	Default: Min/Max:	10000 0 / 10000	16-bit Int	759, 763, 770
		758 A	**[Feed Fwd PID]** Feed forward for the PID.	Default: Min/Max:	Read Only –/+10000	16-bit Int	
		759 A	**[PID Error]** Error value input to the PID function (output of the PID Clamp block).	Default: Min/Max:	Read Only –/+10000	16-bit Int	

Table 6 - Applications File (continued)

File	Group	No.	Parameter Name & Description See page 20 for symbol descriptions	Values		Data Type	Related
APPLICATIONS	PID Control	760 A	**[PID Setpoint 0]** First offset value added to Par 763 [PID Feedback]. This parameter can be assigned to an analog input.	Default: Min/Max:	0 –/+10000	16-bit Int	763
		761 A	**[PID Setpoint 1]** Second offset value added to Par 763 [PID Feedback].	Default: Min/Max:	0 –/+10000	16-bit Int	763
		762 A	**[PID Setpoint Sel]** Selects the offset value added to Par 763 [PID Feedback]. This parameter can be assigned to a digital input.	Default: Options:	0 = "Setpoint 0" 0 = "Setpoint 0" 1 = "Setpoint 1"	16-bit Int	763
		763 A	**[PID Feedback]** Analog input feedback value received.	Default: Min/Max:	0 –/+10000	16-bit Int	
		772 A	**[PID Output Sign]** Determines whether the output of the PID regulator is bipolar or positive (clamp of the negative side).	Default: Options:	1 = "Bipolar" 0 = "Positive" 1 = "Bipolar"	16-bit Int	
		773 A	**[PID Output Scale]** Scale factor for Par 774 [PID Output]. The value of this parameter depends on to which parameter you want to send the PID regulator output.	Default: Min/Max:	1.00 –/+100.00	Real	774
		774 A	**[PID Output]** Displays the PID regulator output. Note: This parameter can be assigned to an analog output.	Default: Min/Max:	Read Only –/+10000	16-bit Int	
		782 A	**[PID Target]** Parameter number to which the PID Output value will be written. Options:	Default:	0 = "Not Used"	16-bit Int	

0 =	"Not Used"	13 =	"Reserved"	26 =	"UsrDefined7" (Par 510)
1 =	"Cur Lim Pos" (Par 8)	14 =	"Adaptive Ref" (Par 183)	27 =	"UsrDefined8" (Par 511)
2 =	"Cur Lim Neg" (Par 9)	15 =	"Reserved"	28 =	"UsrDefined9" (Par 512)
3 =	"Reserved"	16 =	"Reserved"	29 =	"UsrDefined10" (Par 513)
4 =	"Reserved"	17 =	"Reserved"	30 =	"UsrDefined11" (Par 514)
5 =	"CurRedCurLim" (Par 13)	18 =	"Reserved"	31 =	"UsrDefined12" (Par 515)
6 =	"Current Ref" (Par 39)	19 =	"UsrDefined0" (Par 503)	32 =	"UsrDefined13" (Par 516)
7 =	"Trim Current" (Par 40)	20 =	"UsrDefined1" (Par 504)	33 =	"UsrDefined14" (Par 517)
8 =	"Reserved"	21 =	"UsrDefined2" (Par 505)	34 =	"UsrDefined15" (Par 518)
9 =	"Trim Ramp" (Par 42)	22 =	"UsrDefined3" (Par 506)	35 =	"Reserved"
10 =	"Trim Volt" (Par 43)	23 =	"UsrDefined4" (Par 507)	36 =	"Reserved"
11 =	"Reserved"	24 =	"UsrDefined5" (Par 508)	37 =	"Reserved"
12 =	"Reserved"	25 =	"UsrDefined6" (Par 509)	38 =	"Volt Ratio" (Par 1017)

Table 6 - Applications File (continued)

File	Group	No.	Parameter Name & Description See page 20 for symbol descriptions	Values		Data Type	Related
APPLICATIONS	PID Control	786 A	**[PID Source]** Parameter number from which the PID source value will be read. Options:	Default:	0 "Not Used"	16-bit Int	
		787 A	**[PID Source Gain]** Gain of the input value to Par 786 [PID Source].	Default: Min/Max:	1.00 –/+100.00	Real	786
		1046 A	**[PID Accel Time]** Ramp acceleration time after the block PID offset.	Default: Min/Max: Units:	0.00 0.00 / 900.00 s	Real	
		1047 A	**[PID Decel Time]** Ramp deceleration time after the block PID offset.	Default: Min/Max: Units:	0.00 0.00 / 900.00 s	Real	
		1254 A	**[PID Error Gain]** Gain percentage of Par 759 [PID Error].	Default: Min/Max: Units:	1.005 0.000 / 32.005 %	Real	759
		1258 A	**[Enable PID]** Indicates the combined status of Par 769 [Enable PI] and 770 [Enable PD]. If both Par 769 and Par 770 are enabled then Par 1258 [Enable PID] displays "Enabled". If either of Par 769 or Par 770 is disabled, Par 1258 [Enable PID] displays "Disabled".	Default: Min/Max:	Read Only Disabled / Enabled	16-bit Int	769, 770
	Scale Blocks	484 553 1218 1227 1236 1245 A	**[Scale1 Input]** **[Scale2 Input]** **[Scale3 Input]** **[Scale4 Input]** **[Scale5 Input]** **[Scale6 Input]** Parameter number from which the value is read and used as the input quantity to the Scale block. See the Scale Blocks block diagram on page 118 for more information.	Default: Min/Max:	0 0 / 1410	16-bit Int	
		485 554 1219 1228 1237 1246 A	**[Scale1 Output]** **[Scale2 Output]** **[Scale3 Output]** **[Scale4 Output]** **[Scale5 Output]** **[Scale6 Output]** Parameter number to which the value of the Scale block output is written. See the Scale Blocks block diagram on page 118 for more information.	Default: Min/Max:	0 0 / 1410	16-bit Int	

0 =	"Not Used"	14 =	"Adaptive Ref" (Par 183)	28 =	"UsrDefined9" (Par 512)
1 =	"Cur Lim Pos" (Par 8)	15 =	"Out Cur Pct"	29 =	"UsrDefined10" (Par 513)
2 =	"Cur Lim Neg" (Par 9)	16 =	"VltRegOutPct"	30 =	"UsrDefined11" (Par 514)
3 =	"CurLimPosOut" (Par 10)	17 =	"Reserved"	31 =	"UsrDefined12" (Par 515)
4 =	"CurLimNegOut" (Par 11)	18 =	"Reserved"	32 =	"UsrDefined13" (Par 516)
5 =	"CurRedCurLim" (Par 13)	19 =	"UsrDefined0" (Par 503)	33 =	"UsrDefined14" (Par 517)
6 =	"Current Ref" (Par 39)	20 =	"UsrDefined1" (Par 504)	34 =	"UsrDefined15" (Par 518)
7 =	"Trim Current" (Par 40)	21 =	"UsrDefined2" (Par 505)	35 =	"Reserved"
8 =	"CurrReg In"	22 =	"UsrDefined3" (Par 506)	36 =	"Reserved"
9 =	"Trim Ramp" (Par 42)	23 =	"UsrDefined4" (Par 507)	37 =	"Filt Current" (Par 928)
10 =	"Trim Volt" (Par 43)	24 =	"UsrDefined5" (Par 508)	38 =	"Volt Ratio" (Par 1017)
11 =	"Ramp In" (Par 110)	25 =	"UsrDefined6" (Par 509)	39 =	"Vlt Draw Out" (Par 1018)
12 =	"Ramp Out" (Par 113)	26 =	"UsrDefined7" (Par 510)		
13 =	"Volt Reg In" (Par 118)	27 =	"UsrDefined8" (Par 511)		

Table 6 - Applications File (continued)

File	Group	No.	Parameter Name & Description See page 20 for symbol descriptions	Values		Data Type	Related
APPLICATIONS	Scale Blocks	486 555 1220 1229 1238 1247 A	**[Scale1 Mul]** **[Scale2 Mul]** **[Scale3 Mul]** **[Scale4 Mul]** **[Scale5 Mul]** **[Scale6 Mul]** Multiplier of the input quantity (after a possible limitation). Resolution: 5 digits. See the Scale Blocks block diagram on page 118 for more information.	Default: Min/Max:	1.00 –/+10000.00	Real	
		487 556 1221 1230 1239 1248 A	**[Scale1 Div]** **[Scale2 Div]** **[Scale3 Div]** **[Scale4 Div]** **[Scale5 Div]** **[Scale6 Div]** Divisor, through which it is possible to divide the input quantity already multiplied and limited. Resolution: 5 digits. See the Scale Blocks block diagram on page 118 for more information.	Default: Min/Max:	1.00 –/+10000.00	Real	
		488 557 1222 1231 1240 1249 A	**[Scale1 In Max]** **[Scale2 In Max]** **[Scale3 In Max]** **[Scale4 In Max]** **[Scale5 In Max]** **[Scale6 In Max]** Maximum limit of the input quantity. Resolution: 5 digits. See the Scale Blocks block diagram on page 118 for more information.	Default: Min/Max:	0.00 $-2^{31}/+2^{31}-1$	Real	
		489 558 1223 1232 1241 1250 A	**[Scale1 In Min]** **[Scale2 In Min]** **[Scale3 In Min]** **[Scale4 In Min]** **[Scale5 In Min]** **[Scale6 In Min]** Minimum limit of the input quantity. Resolution: 5 digits. See the Scale Blocks block diagram on page 118 for more information.	Default: Min/Max:	0.00 $-2^{31}/+2^{31}-1$	Real	
		490 559 1224 1233 1242 1251 A	**[Scale1 In Off]** **[Scale2 In Off]** **[Scale3 In Off]** **[Scale4 In Off]** **[Scale5 In Off]** **[Scale6 In Off]** Offset to be added to the input quantity. Resolution: 5 digits. See the Scale Blocks block diagram on page 118 for more information.	Default: Min/Max:	0.00 $-2^{31}/+2^{31}-1$	Real	
		491 560 1225 1234 1243 1252 A	**[Scale1 Out Off]** **[Scale2 Out Off]** **[Scale3 Out Off]** **[Scale4 Out Off]** **[Scale5 Out Off]** **[Scale6 Out Off]** Offset to be added to the output quantity. Resolution: 5 digits. See the Scale Blocks block diagram on page 118 for more information.	Default: Min/Max:	0.00 $-2^{31}/+2^{31}-1$	Real	
		492 561 1226 1235 1244 1253 A	**[Scale1 In Abs]** **[Scale2 In Abs]** **[Scale3 In Abs]** **[Scale4 In Abs]** **[Scale5 In Abs]** **[Scale6 In Abs]** Controls how the input value is processed. • "Off" = The input quantity is processed with its sign. • "On" = The input quantity is processed with a positive sign (absolute value). It is possible to have the polarity change with the signs of the [Scale*x* Mul] or [Scale*x* Div] parameters. See the Scale Blocks block diagram on page 118 for more information.	Default: Options:	0 = "Off" 0 = "Off" 1 = "On"	16-bit Int	

Table 7 - Utility File

File	Group	No.	Parameter Name & Description See page 20 for symbol descriptions	Values			Data Type	Related
UTILITY	Reference Config	209	**[Save HIM Ref]** Enables a feature to save the present reference value issued by the HIM to field controller memory when a power loss occurs. The value is restored to the HIM at power up. Bit 0 - "At Pwr Down" 0 = Do not save, 1 = Save at power down					
		210	**[Man Ref Preload]** Enables/disables a feature to automatically load the present "Auto" reference value into the HIM when "Manual" is selected. Allows smooth speed transition from "Auto" to "Manual."	Default: Options:	1 = 0 = 1 =	"Enabled" "Disabled" "Enabled"	16-bit Int	
		249	**[MOP Ref Config]** Enables/Disables the feature that saves the present MOP reference at power down or at stop. Notes: This parameter can be assigned to a digital input. • Bit 0 "Save PwrDown" - When set to "0" = Do not save, "1" = Save • Bit 1 "Save At Stop" - When set to "0" = Do not save, "1" = Save • Bit 2 "Reset AtStop" - When set to "0" = No MOP reset, "1" = Reset MOP at Stop • Bit 3 "Reset At Flt" - When set to "0" = No MOP reset, "1" = Reset MOP at Fault					
		1322	**[Direction Mode]** Selects the method that will be used for changing direction. • "Unipolar" - Device Logic determines the direction. • "Bipolar" - The sign of the reference determines the direction. • "Rev Disable" - Forward direction only (not changeable).	Default: Options:	0 = 0 = 1 = 2 =	"Unipolar" "Unipolar" "Bipolar" "Rev Disable"	16-bit Int	
		1375	**[MOP Select]** Selects the destination of the MOP signal.	Default: Options:	0 = 0 = 1 = 2 = 3 = 4 =	"OFF" "OFF" "Volt Ref A" (Par 44) "Volt Ref B" (Par 48) "Trim Volt" (Par 43) "TB Man Ref"	16-bit Int	
	Device Memory	211	**[Param Access Lvl]** Selects the parameter display level. • "Basic" = Reduced parameter set. • "Advanced" = Full parameter set.	Default: Options:	0 = 0 = 1 =	"Basic" "Basic" "Advanced"	16-bit Int	
		258	**[Reset Defaults]** Setting this parameter to 1 "Factory" will load the default settings in the field controller firmware.	Default: Options:	0 = 0 = 1 =	"Ready" "Ready" "Factory"	16-bit Int	
		302	**[Language]** Selects the operating language of the device. Only two languages are available in the device at any given time, English and one of the following: French, German, Italian, Portuguese, or Spanish. The field controller ships with the default language options of English and Spanish only. The additional language files can be downloaded at: https://compatibility.rockwellautomation.com/Pages/Home.aspx	Default: Options:	0 = 0 = 1 = 2 = 3 = 4 = 5 = 6 = 7 =	"Not Selected" "Not Selected" "English" "French" "Spanish" "Italian" "German" "Reserved" "Portuguese"	16-bit Int	

Options	Reserved	Reserved	Reserved	Reserved	Reserved	Reserved	Reserved	Reserved	Reserved	Reserved	Reserved	Reserved	Reserved	Reserved	Reserved	At Pwr Down
Default	x	x	x	x	x	x	x	x	x	x	x	x	x	x	x	1
Bit	15	14	13	12	11	10	9	8	7	6	5	4	3	2	1	0

Options	Reserved	Reserved	Reserved	Reserved	Reserved	Reserved	Reserved	Reserved	Reserved	Reserved	Reserved	Reserved	Reset At Flt	Reset AtStop	Save At Stop	Save PwrDown
Default	x	x	x	x	x	x	x	x	x	x	x	x	0	0	0	0
Bit	15	14	13	12	11	10	9	8	7	6	5	4	3	2	1	0

Table 7 - Utility File (continued)

File	Group	No.	Parameter Name & Description See page 20 for symbol descriptions	Values		Data Type	Related
UTILITY	Diagnostics	346 A	**[Curr Positive]** Indicates whether the field controller is operating with a positive current reference. • 1 "Active" = The field controller is operating with a positive current reference. The motor is accelerating in the forward direction or decelerating in the negative direction and Par 20 [Ramp Delay] has timed out. • 0 "Not Active" = The field controller is not operating with a positive current reference. Note: This parameter can be assigned to a digital output.	Default: Min/Max:	Read Only 0 / 1	16-bit Int	20
		347 A	**[Curr Negative]** Indicates whether the field controller is operating with a negative current reference. • 1 "Active" = The field controller is operating with negative current reference. The motor is accelerating in the reverse direction or decelerating in the forward direction and Par 20 [Ramp Delay] has timed out. • 0 "Not Active" = The field controller is not operating with negative current reference. Note: This parameter can be assigned to a digital output.	Default: Min/Max:	Read Only 0 / 1	16-bit Int	20
		349	**[CurrLimit Active]** Indicates whether or not the field controller is working within the set current limits. • 1 "Active" = The field controller is currently in a current limited state. • 0 "Not Active" =The field controller is not in a current limited state. Note: This parameter is assigned to digital output 4 (Par 148 [Digital Out4 Sel]) by default.	Default: Min/Max:	Read Only 0 / 1	16-bit Int	
		372	**[Vlt Limit Active]** Indicates whether the current voltage reference value is limited by the defined minimum and maximum limit values. • 1 "Active" = The reference value is currently limited because the value entered is out of range of the limit values defined. • 0 "Not Active" = The reference value is within the defined limit values. Note: This parameter can be assigned to a digital output.	Default: Min/Max:	Read Only 0 / 1	16-bit Int	

Table 7 - Utility File (continued)

File	Group	No.	Parameter Name & Description See page 20 for symbol descriptions	Values	Data Type	Related
UTILITY	Diagnostics	381	**[Device Status 1]** Present operating condition of the field controller. Bits 2, 3, 4, and 5 only apply when the field controller is in voltage mode (Par 241 [Vlt Cur Mode Sel] is set to 1 "Volt Reg"). Bit 0 "Ready" - When set (= "1"), the field controller is ready Bit 1 "Active" - When set, the field controller is active Bit 2 "Command Dir" - The direction (polarity) of commanded operation, 0 = Reverse, 1 = Forward Bit 3 "Actual Dir" - The actual direction (polarity) of commanded operation, 0 = Reverse, 1 = Forward Bit 4 "Accelerating" - When set, the field controller load voltage is increasing in magnitude Bit 5 "Decelerating" - When set, the field controller load voltage is decreasing in magnitude Bit 6 "Alarm" - When set, the field controller is in an alarm state Bit 7 "Faulted" - When set, the field controller is faulted Bit 8 "At Voltage" - When set, the field controller is at the commanded voltage Bit 9…11 "Local ID 0-2" (1) Bit 12…15 "Vlt Ref ID 0-3" (2)	Read Only		

Options	Vlt Ref ID 3 (2)	Vlt Ref ID 2 (2)	Vlt Ref ID 1 (2)	Vlt Ref ID 0 (2)	Local ID 2 (1)	Local ID 1 (1)	Local ID 0 (1)	At Voltage	Faulted	Alarm	Decelerating	Accelerating	Actual Dir	Command Dir	Active	Ready
Default	0	0	0	0	0	0	1	0	0	0	0	0	1	1	0	1
Bit	15	14	13	12	11	10	9	8	7	6	5	4	3	2	1	0

(2) Bits				Description
15	14	13	12	
0	0	0	0	Vlt Ref A Auto
0	0	0	1	Vlt Ref B Auto
0	0	1	0	Preset Vlt 2 Auto
0	0	1	1	Preset Vlt 3 Auto
0	1	0	0	Preset Vlt 4 Auto
0	1	0	1	Preset Vlt 5 Auto
0	1	1	0	Preset Vlt 6 Auto
0	1	1	1	Preset Vlt 7 Auto
1	0	0	0	TB Manual
1	0	0	1	DPI Port 1 Manual
1	0	1	0	DPI Port 2 Manual
1	0	1	1	DPI Port 3 Manual
1	1	0	0	DPI Port 4 Manual
1	1	0	1	DPI Port 5 Manual
1	1	1	0	DPI Port 6 Manual
1	1	1	1	Jog Ref

(1) Bits			Description
11	10	9	
0	0	0	Port 0 (TB)
0	0	1	DPI Port 1
0	1	0	DPI Port 2
0	1	1	DPI Port 3
1	0	0	DPI Port 4
1	0	1	DPI Port 5
1	1	0	DPI Port 6
1	1	1	No Local Control

Table 7 - Utility File (continued)

File	Group	No.	Parameter Name & Description See page 20 for symbol descriptions	Values		Data Type	Related
UTILITY	Diagnostics	382	**[Device Status 2]** Present operating condition of the field controller. Bit 0 “Ready” - When set (= “1”), the field controller is ready Bit 1 “Active” - When set, the field controller is active Bit 2 “Running” - When set, the field controller is running Bit 3 “Jogging” - When set, the field controller is being jogged Bit 4 “Stopping” - When set, the field controller is stopping Bit 5 “Curr Limit” - When set, the field controller is in current limit Bit 6 “Auto Tuning” - When set, the field controller is auto tuning Bit 8 “Volt Mode” - When set, the field controller is in voltage mode Bit 9 “Curr Mode” - When set, the field controller is in current mode Bit 10 “VltRegPosLim” - When set, the Voltage Regulator PI positive limit is active Bit 11 “VltRegNegLim” - When set, the Voltage Regulator PI negative limit is active Bit 12 “AlphaTest” - When set, the Alpha test is active		Read Only		
		393 A	**[Volt Threshold]** Indicates if the field controller is above or below the threshold voltage specified in parameters 101 [Volt Thresh Pos] (clockwise rotation) and 102 [Volt Thresh Neg] (counter-clockwise rotation). • “0 Above Thresh” = The voltage has exceeded the set voltage threshold. • “1 Below Thresh” = The voltage has not exceeded the set voltage threshold. This parameter can be assigned to a digital output. See Voltage Threshold Indicators on page 148 for more information.	Default: Min/Max:	Read Only 0 / 1	16-bit Int	101, 102, 103
		394	**[At Voltage]** Indicates whether or not the current voltage of the field controller corresponds to the voltage reference (specified in Par 118 [Volt Reg In]) before the voltage regulator and the ramp reference (if enabled) are applied. The voltage above and below the voltage reference at which [At Voltage] will indicate “1 Equal” is set in Par 104 [At Voltage Error]. • “0 Not Equal” - The field controller is not working at the set voltage reference. • “1 Equal” - The field controller is working at the set voltage reference. Notes: This parameter can be assigned to a digital output. It also corresponds to the “At Volt” indication on the Status Line of the HIM. This parameter can be assigned to a digital output. See Voltage Threshold Indicators on page 148 for more information.	Default: Min/Max:	Read Only 0 / 1	16-bit Int	104, 105
		395	**[At Zero Volt]** Indicates whether or not the actual voltage of the motor is below the zero voltage threshold as specified in Par 107 [Volt Zero Level]. • “0 Equal” - The actual voltage is below the value of Par 107 [Volt Zero Level] and Par 108 [Volt Zero Delay] has timed out. • “1 Not Equal” - The actual voltage is above the value of Par 107 [Volt Zero Level]. Notes: This parameter can be assigned to a digital output. This parameter can be assigned to a digital output. See Voltage Threshold Indicators on page 148 for more information.	Default: Min/Max:	Read Only 0 / 1	16-bit Int	107, 108
		396 A	**[MOP Inc Active]** Indicates whether or not the field controller is accelerating using the preselected ramp. • 0 “No Accel” = the field controller is not accelerating using a preselected ramp • 1 “Accel” = the field controller is accelerating using a preselected ramp	Default: Min/Max:	Read Only 0 / 1	16-bit Int	

Options	Reserved	Reserved	Reserved	AlphaTest	VltRegNegLim	VltRegPosLim	Curr Mode	Volt Mode	Reserved	Auto Tuning	Curr Limit	Stopping	Jogging	Running	Active	Ready
Default	x	x	x	0	0	0	0	0	x	0	0	0	0	0	0	1
Bit	15	14	13	12	11	10	9	8	7	6	5	4	3	2	1	0

Table 7 - Utility File (continued)

File	Group	No.	Parameter Name & Description See page 20 for symbol descriptions	Values		Data Type	Related
UTILITY	Diagnostics	397 A	**[MOP Dec Active]** Indicates whether the field controller is decelerating using the preselected ramp. • 0 "No Decel" = The field controller is not decelerating using a preselected ramp • 1 "Decel" = The field controller is decelerating using a preselected ramp	Default: Min/Max:	Read Only 0 / 1	16-bit Int	
		400 A	**[Vlt Select 0]** Indicates the state of the assigned digital input, [Digital In*x* Sel], set to 17 "Volt Sel 1". See Option Definitions for [Digital Inx Sel] on page 74 for instructions on how to set digital input voltage selects to different voltage references. • "0" = Digital input [Digital In*x* Sel] set to 17 "Volt Sel 1" not asserted • "1" = Digital input [Digital In*x* Sel] set to 17 "Volt Sel 1" asserted Note: By default, the state of this parameter is determined by digital input 5.	Default: Min/Max:	Read Only 0 / 1	16-bit Int	401, 402
		401 A	**[Vlt Select 1]** Indicates the state of the assigned digital input, [Digital In*x* Sel], set to 18 "Volt Sel 2". See Option Definitions for [Digital Inx Sel] on page 74 for instructions on how to set digital input voltage selects to different voltage references. • "0" = Digital input [Digital In*x* Sel] set to 18 "Volt Sel 2" not asserted • "1" = Digital input [Digital In*x* Sel] set to 18 "Volt Sel 2" asserted Note: By default, the state of this parameter is determined by digital input 6.	Default: Min/Max:	Read Only 0 / 1	16-bit Int	400, 402
		402 A	**[Vlt Select 2]** Indicates the state of the assigned digital input, [Digital Inx Sel], set to 19 "Volt Sel 3". See Option Definitions for [Digital Inx Sel] on page 74 for instructions on how to set digital input voltage selects to different voltage references. • "0" = Digital input [Digital In*x* Sel] set to 19 "Volt Sel 3" not asserted • "1" = Digital input [Digital In*x* Sel] set to 19 "Volt Sel 3" asserted Note: By default, the state of this parameter is determined by digital input 7.	Default: Min/Max:	Read Only 0 / 1	16-bit Int	400, 401
		403 A	**[Ramp Select 0]** Indicates the state of the assigned digital input, [Digital In*x* Sel], set to 25 "Acc2 & Dec2" or 26 "Accel 2". • "0" = Accel 1 ramp rate is selected • "1" = Accel 2 ramp rate is selected Note: This parameter can be assigned to indicate the state of a digital input.	Default: Min/Max:	Read Only 0 / 1	16-bit Int	404
		404 A	**[Ramp Select 1]** Indicates the state of the assigned digital input, [Digital In*x* Sel], set to 25 "Acc2 & Dec2" or 27 "Decel 2". • "0" = Decel 1 ramp rate is selected • "1" = Decel 2 ramp rate is selected Note: This parameter can be assigned to indicate the state of a digital input.	Default: Min/Max:	Read Only 0 / 1	16-bit Int	403

Table 7 - Utility File (continued)

File	Group	No.	Parameter Name & Description See page 20 for symbol descriptions	Values		Data Type	Related
UTILITY	Diagnostics	1328	**[Device Logic Rslt]** The final logic command resulting from the combination of all DPI and discrete inputs. This parameter has the same structure as the product specific logic command received from DPI and is used in peer-to-peer communications. For each bit, 1=Condition true and 0=Condition false. Bit 0 “Stop” - Stop command Bit 1 “Start” - Start command Bit 2 “Jog” - Jog command Bit 3 “Clear Faults” - Clear faults command Bit 4 “Forward” - Forward direction command Bit 5 “Reverse” - Reverse direction command Bit 6 “Local” - Local control command” Bit 7 “MOP Inc” - MOP Increment command Bit 8 “Accel 1” - Acceleration Rate 1 command Bit 9 “Accel 2” - Acceleration Rate 2 command Bit 10 “Decel 1” - Deceleration Rate 1 command Bit 11 “Decel 2” - Deceleration Rate 2 command Bit 12…14 “Vlt Ref ID 0”… “Vlt Ref ID 2” - Voltage reference source(1) Bit 15 “MOP Dec” - MOP Decrement command			16-bit Int	

Options	MOP Dec	Vlt Ref ID 2	Vlt Ref ID 1	Vlt Ref ID 0	Decel 2	Decel 1	Accel 2	Accel 1	MOP Inc	Local	Reverse	Forward	Clear Faults	Jog	Start	Stop
Default	0	0	0	0	0	0	0	0	0	0	0	0	0	0	0	1
Bit	15	14	13	12	11	10	9	8	7	6	5	4	3	2	1	0

(1) Bits			Description
14	13	12	
0	0	0	No Command - Manual Mode
0	0	1	Vlt Ref A Auto
0	1	0	Vlt Ref B Auto
0	1	1	Preset Vlt 3 Auto
1	0	0	Preset Vlt 4 Auto
1	0	1	Preset Vlt 5 Auto
1	1	0	Preset Vlt 6 Auto
1	1	1	Preset Vlt 7 Auto

	1329	**[Volt Ref Source]** Displays the number of the parameter that is the source of the field controller’s voltage reference (Par 118 [Volt Reg In]). For example, if the value of this parameter is “70,” then Par 70 [Analog In 1] is the source of the voltage reference value shown in Par 118 [Volt Reg In].	Default: Min/Max:	Read Only 0 / (highest possible parameter number)	16-bit Int	118

Table 7 - Utility File (continued)

File	Group	No.	Parameter Name & Description See page 20 for symbol descriptions	Values		Data Type	Related
UTILITY	Diagnostics	1330	**[Vlt Ref Sel Sts]** Status of the voltage reference selections. Bit 0 "Ref A Auto" - When set (= 1), the value of the voltage reference is Par 44 [Volt Ref A] and the source in Par 1329 [Volt Ref Source] (Par 1328 [Device Logic Rslt], bits 12…14 = 001). Bit 1 "Ref B Auto" - When set, the value of the voltage reference is Par 48 [Volt Ref B] and the source in Par 1329 [Volt Ref Source] (Par 1328 [Device Logic Rslt], bits 12…14 = 010). Bit 2 "Min Vlt Lim" - When set, the voltage reference value is clamped to the value of Par 5 [Min Volt Fwd] or 6 [Min Volt Rev], based on direction. Bit 3 "Max Vlt Lim" - When set, the voltage reference value is clamped to the value of Par 3 [Max Volt Fwd] or 4 [Max Volt Rev], based on direction. Bit 5 "Trim Ramp" - When set, the voltage reference is offset (non-zero) by the value in Par 42 [Trim Ramp]. Bit 6"Trim Volt" - When set, the voltage reference is offset (non-zero) by the value in Par 43 [Trim Volt]. Bit 7 "Preset Auto" - When set, the voltage reference is the "Preset Volt x Auto" source selected in Par 1328 [Device Logic Rslt], bits 12…14 = 011…111. Bit 8 "Manual Ref" - When set, the voltage reference is the manual reference selected in Par 1328 [Device Logic Rslt], bits 12…14 = 000. Bit 9 "Scaled Ref" - When set, the voltage reference is the result of the scale block configured to write to the parameter specified in Par 1329 [Volt Ref Source]. Note that if no voltage reference is selected (Par 1329 [Volt Ref Source] = 0), this bit will be set (=1) if any of the Scale Block input parameters are at their default value of 0. Bit 10 "Bipolar Ref" - When set, Par 1322 [Direction Mode] = 1 "Bipolar" and the sign of the voltage reference determines motor rotation direction. Bit 11 "Rev Disable" - When set, Par 1322 [Direction Mode] = 2 "Rev Disable" and negative voltage reference values are clamped to zero. Bit 12 "Unipolar Ref" - When set, Par 1322 [Direction Mode] = 0 "Unipolar" and the sign of the voltage reference is selected by Par 1328 [Device Logic Rslt], bit 4 "Forward" or bit 5 "Reverse."			16-bit Int	

Options	Reserved	Reserved	Reserved	Unipolar Ref	Rev Disable	Bipolar Ref	Scaled Ref	Manual Ref	Preset Auto	Trim Volt	Trim Ramp	Reserved	Max Vlt Lim	Min Vlt Lim	Ref B Auto	Ref A Auto
Default	x	x	x	0	0	0	0	0	0	0	0	x	0	0	0	0
Bit	15	14	13	12	11	10	9	8	7	6	5	4	3	2	1	0

File	Group	No.	Parameter Name & Description	Values		Data Type	Related
		1381 A	**[TestPoint Sel]** Selects the function whose value is displayed in [TestPoint Data]. These are internal values that are not accessible through any other parameters. Typically, these are internal field controller variables and registers. See Testpoint Codes and Functions on page 101 for more information.	Default: Min/Max:	566 566 / 584	16-bit Int	
		1382 A	**[TestPoint Data]** The present value of the function selected in Par 1381 [TestPoint Sel].	Default: Min/Max:	Read Only -23^{1} / 23^{1-1}	16-bit Int	
		1384 A	**[TaskLoad 1 ms]** The load percentage of the 1 ms task in the firmware.	Default: Min/Max:	Read Only 0.00 / 100.00	Real	
		1385 A	**[TaskLoad 2 ms]** The load percentage of the 2 ms task in the firmware.	Default: Min/Max:	Read Only 0.00 / 100.00	Real	
		1386 A	**[TaskLoad 8 ms]** The load percentage of the 8 ms task in the firmware.	Default: Min/Max:	Read Only 0.00 / 100.00	Real	

Table 7 - Utility File (continued)

File	Group	No.	Parameter Name & Description See page 20 for symbol descriptions	Values		Data Type	Related
UTILITY	Diagnostics	1402	**[Last Stop Source]** Displays the source that initiated the most recent stop sequence.	Default: Options:	Read Only 0 = "Pwr Removed" 1-5 = "DPI Port 1-5" 6 = "Reserved" 7 = "Digital In" 8 = "Fault" 9 = "Not Enabled" 10 = "Reserved" 11 = "Jog" 12 = "Selftune"	16-bit Int	
		1403	**[Start Inhibits]** Displays the inputs currently preventing the field controller from starting. For each bit, 1=Inhibit condition true and 0=Inhibit condition false.				

Options	Reserved	Reserved	DPI Port 5	DPI Port 4	DPI Port 3	DPI Port 2	DPI Port 1	Digital In	Reserved	Startup Actv	Reserved	Stop Assertd	Reserved	Enable	Type 2 Alarm	Fault
Default	x	x	x	0	0	0	0	0	x	0	0	1	x	0	0	0
Bit	15	14	13	12	11	10	9	8	7	6	5	4	3	2	1	0

File	Group	No.	Parameter Name & Description	Values		Data Type	Related
	Faults	263	**[Clear Fault Que]** Allows you to clear the fault queue. See Manually Clear Faults on page 92.	Default: Options:	0 = "Ready" 0 = "Ready" 1 = "Clr Flt Que"	16-bit Int	
		1347	**[Fault Clear]** Allows you to reset field controller faults and/or clear the fault queue.	Default: Options:	0 = "Ready" 0 = "Ready" 1 = "Clear Faults" 2 = "Clr Flt Que"	16-bit Int	
		1348	**[Fault Clr Mode]** Enables/Disables a fault reset (clear faults) attempt from any source. This does not apply to fault codes which are cleared indirectly by using other actions.	Default: Options:	1 = "Enabled" 0 = "Disabled" 1 = "Enabled"	16-bit Int	
		1349	**[Status1 at Fault]** Captures and displays Par 381 [Device Status 1] bit pattern at the time of the last fault. 0=Condition False, 1=Condition True.				381

Options	Vlt Ref ID 3	Vlt Ref ID 2	Vlt Ref ID 1	Vlt Ref ID 0	Local ID 2	Local ID 1	Local ID 0	At Voltage	Faulted	Alarm	Decelerating	Accelerating	Actual Dir	Command Dir	Active	Ready
Default	0	0	0	0	1	1	1	0	1	0	0	0	1	1	0	0
Bit	15	14	13	12	11	10	9	8	7	6	5	4	3	2	1	0

File	Group	No.	Parameter Name & Description	Values		Data Type	Related
		1350	**[Status2 at Fault]** Captures and displays Par 382 [Device Status 2] bit pattern at the time of the last fault. 0=Condition False, 1=Condition True.				382

Options	Reserved	Reserved	Reserved	AlphaTest	VltRegNegLim	VltRegPosLim	Curr Mode	Volt Mode	Reserved	Auto Tuning	Curr Limit	Stopping	Jogging	Running	Active	Ready
Default	x	x	x	x	x	x	x	x	x	0	0	0	1	1	0	0
Bit	15	14	13	12	11	10	9	8	7	6	5	4	3	2	1	0

Table 7 - Utility File (continued)

File	Group	No.	Parameter Name & Description See page 20 for symbol descriptions	Values		Data Type	Related
UTILITY	Faults	1351 1352 1353 1354 1355 1356 1357 1358 1359 1360	**[Fault 1 Code]** **[Fault 2 Code]** **[Fault 3 Code]** **[Fault 4 Code]** **[Fault 5 Code]** **[Fault 6 Code]** **[Fault 7 Code]** **[Fault 8 Code]** **[Fault 9 Code]** **[Fault 10 Code]** A code that represents the fault that tripped the field controller. The codes will appear in these parameters in the order they occur (i.e., [Fault 1 Code] = the most recent fault). See Fault Descriptions on page 93 for a list of possible codes.	Default: Min/Max:	Read Only 0 / 32768	16-bit Int	
		1361 1362 1363 1364 1365 1366 1367 1368 1369 1370	**[Fault 1 Time]** **[Fault 2 Time]** **[Fault 3 Time]** **[Fault 4 Time]** **[Fault 5 Time]** **[Fault 6 Time]** **[Fault 7 Time]** **[Fault 8 Time]** **[Fault 9 Time]** **[Fault 10 Time]** The time between initial field controller power up and the occurrence of the associated trip fault.	Default: Min/Max: Units:	Read Only 0.000 / 134000000.000 hr.	Real	
		1371	**[Fault Amps]** Captures and displays the output current (as a percentage of rated current) at the time of the last fault.	Default: Min/Max: Units:	Read Only –/+200 %	16-bit Int	
		1374	**[Fault Voltage]** Captures and displays the output voltage at the time of the last fault.	Default: Min/Max: Units:	Read Only - / + 999.00 Vdc	Real	
	Alarms	354	**[Aux Inp Flt Cfg]** Determines the response of the field controller to an external fault condition (F2 "Auxiliary Input"). This condition exists when there is no voltage signal at the digital input terminal assigned to [Digital In*x* Sel] with a value of 14 "Aux Fault". 1 "Alarm" - a Type 1 alarm is generated and the field controller continues to operate 2 "Fault" - a fault is generated and the field controller will coast to a stop (cannot be started until fault is cleared) 3 "Fast Stop" - a fault is generated and the field controller is stopped based on the value set in Par 38 [Fast Stop Time] (cannot be started until fault is cleared) 4 "Normal Stop" - a fault is generated and the field controller is stopped based on the programmed ramp times (cannot be started until fault is cleared) 5 "Current Limit Stop" - a fault is generated and the field controller is stopped with the programmed maximum current limit (cannot be started until fault is cleared) See Chapter 3 - Troubleshooting on page 89 for a list of possible fault and alarm codes. **ATTENTION:** Setting this parameter to 1 "Alarm", could result in motor and/or equipment damage. If set to "Alarm", it is strongly recommended that an external means of protecting against this condition be provided.	Default: Options:	2 = "Fault" 1 = "Alarm" 2 = "Fault" 3 = "Fast Stop" 4 = "Normal Stop" 5 = "CurrLim Stop"	16-bit Int	

Table 7 - Utility File (continued)

File	Group	No.	Parameter Name & Description See page 20 for symbol descriptions	Values		Data Type	Related
UTILITY	Alarms	365	**[OverTemp Flt Cfg]** Determines the response of the field controller to an over temperature condition (F16 "PTC Over Temp"). 1 "Alarm" - a Type 1 alarm is generated and the field controller continues to operate 2 "Fault" - a fault is generated and the field controller will coast to a stop (cannot be started until fault is cleared) 3 "Fast Stop" - a fault is generated and the field controller is stopped based on the value set in Par 38 [Fast Stop Time] (cannot be started until fault is cleared) 4 "Normal Stop" - a fault is generated and the field controller is stopped based on the programmed ramp times (cannot be started until fault is cleared) 5 "Current Limit Stop" - a fault is generated and the field controller is stopped with the programmed maximum current limit (cannot be started until fault is cleared) See Chapter 3 - Troubleshooting on page 89 for a list of possible fault and alarm codes. **ATTENTION:** Setting this parameter to 0 "Ignore" or 1 "Alarm", could result in motor and/or equipment damage. If set to "Ignore" or "Alarm", it is strongly recommended that an external means of protecting against this condition be provided.	Default: Options:	2 = "Fault" 0 = "Ignore" 1 = "Alarm" 2 = "Fault" 3 = "Fast Stop" 4 = "Normal Stop" 5 = "CurrLim Stop"	16-bit Int	
		470	**[UnderVlt Flt Dly]** Configures the length of time that one or more of the AC Line phases can be less than 100V AC before an AC undervoltage fault (F4) is activated. The condition must persist for the entire delay time or the delay timer is reset. **ATTENTION:** Setting this value incorrectly for the application could result in damage to the field controller SCR(s) and or fuses.	Default: Min/Max: Units:	10 0 / 100 ms	16-bit Int	
		481	**[UnderVolt Thresh]** The AC input voltage level below which an undervoltage fault (F4 "AC Undervoltage") will be detected. A typical value is 85% of the nominal AC line voltage (Par 466 [AC Line Voltage]). This fault can only occur while the field controller is running. See Fault Descriptions on page 93 for a description and possible actions for this fault.	Default: Min/Max: Units:	100 for a 200V field controller 400 for a 500V field controller 0 / 1000 Vac	16-bit Int	
		584	**[OverCurrent Thr]** Value at which an overcurrent condition (F13 "Overcurrent") will be detected. See Fault Descriptions on page 93 for a list of possible codes.	Default: Min/Max: Units:	175 0 / 250 %	16-bit Int	
		585	**[Overvolt Val]** Voltage value at which an "Overvoltage" fault (F25) will occur. See Fault Descriptions on page 93 for a description and possible actions for this fault. **ATTENTION:** Verify that you have correctly set this parameter appropriately for your application. Incorrectly setting this parameter may cause a hazard of personal injury and/or equipment damage.	Default: Min/Max: Units:	600 0 / 7800 V	16-bit Int	162
		855	**[SSC Flt Dly]** Hold-off time for Synchronous Serial Controller (SSC) Error. Specifies how many invalid fiber communication packets before fault is generated (invalid packets * 2 ms) See Fault Descriptions on page 93 for a description and possible actions for this fault.	Default: Min/Max: Units:	80 0 / 500 ms	16-bit Int	

Table 7 - Utility File (continued)

File	Group	No.	Parameter Name & Description See page 20 for symbol descriptions	Values		Data Type	Related
UTILITY	Alarms	1380	**[Device Alarm 1]** Alarm conditions that currently exist in the field controller. For each bit, 1 = condition true, and 0 = condition false. Bit 0 "DigInCflctA" - Digital input functions are in conflict. Bit 1 "DigInCflctB" - A digital Start input has been configured without a Stop input or other functions are in conflict. Bit 2 "DigInCflctC" - More than one physical input has been configured for the same input function. Bit 3 "BipolarCflct" - Parameter 1322 [Direction Mode] is set to "Bipolar" or "Reverse Dis" and one or more of the following digital input functions is configured: "Fwd/Reverse," "Run Forward," "Run Reverse," "Jog Forward" or "Jog Reverse." Bit 4 "Ref Cflct" - Multiple voltage or position references are configured. Bit 5 "CntactrCflct" - Contactor input functions are in conflict. Bit 7 "Overvoltage" - There is an overvoltage on the armature circuit. Bit 8 "Over Temp" - The motor has exceeded its temperature rating [as signaled by the thermistor (PTC) or thermal switch connected to the field controller terminals 78 and 79]. Bit 9 "Aux Input" - An auxiliary input interlock is open or a voltage (15…30 V) or reference signal is missing for the digital input set to 14 "Aux Fault" (only updates if Par 354 [Aux Inp Flt Cfg] is set to 1 "Alarm"). Bit 12 "PwrUp Start" - Indicates that the field controller is starting or has automatically resumed running at commanded speed after field controller input power was restored. Bit 13 "OpenSCR Trip" - An open SCR trip level has been reached. See Chapter 3 - Troubleshooting on page 89 for a list of possible fault and alarm codes.			16-bit Int	1322

Options	Reserved	Reserved	OpenSCR Trip	PwrUp Start	Reserved	Reserved	Aux Input	Over Temp	Overvoltage	Reserved	CntactrCflct	Ref Cflct	BipolarCflct	DigInCflctC	DigInCflctB	DigInCflctA
Default	x	x	0	0	x	x	0	0	0	x	0	0	0	0	0	0
Bit	15	14	13	12	11	10	9	8	7	6	5	4	3	2	1	0

File	Group	No.	Parameter Name & Description	Values		Data Type	Related
UTILITY	User Defined	50	**[UsrDsplyMult0]** Numerator in the calculation for user-defined, field controller voltage display units. Note: This parameter is not used.	Default: Min/Max:	1 1 / 1073741823	32-bit Int	
UTILITY	User Defined	51	**[UsrDsplyDiv0]** Denominator in the calculation for user-defined, field controller voltage display units. Note: This parameter is not used.	Default: Min/Max:	1 1 / 1073741823	32-bit Int	
UTILITY	User Defined	53	**[UsrValMult1]** Numerator in the calculation for scaling the user-defined, field controller voltage display units. Note: This parameter is not used.	Default: Min/Max:	1 1 / 32767	16-bit Int	
UTILITY	User Defined	54	**[UsrValDiv1]** Denominator in the calculation for scaling the user-defined, field controller voltage display units. Note: This parameter is not used.	Default: Min/Max:	1 1 / 32767	16-bit Int	

Table 7 - Utility File (continued)

File	Group	No.	Parameter Name & Description See page 20 for symbol descriptions	Values		Data Type	Related
UTILITY	User Defined	503 504 505 506 507 508 509 510 511 512 513 514 515 516 517 518 A	**[UserDefined0]** **[UserDefined1]** **[UserDefined2]** **[UserDefined3]** **[UserDefined4]** **[UserDefined5]** **[UserDefined6]** **[UserDefined7]** **[UserDefined8]** **[UserDefined9]** **[UserDefined10]** **[UserDefined11]** **[UserDefined12]** **[UserDefined13]** **[UserDefined14]** **[UserDefined15]** General use signed 16 bit variables used for data exchange. Note: Pars 503…506 can be assigned to analog inputs. The values of Pars 503, 504, and 507…509 can be assigned to an analog output.	Default: Min/Max:	0 –32768/+32767	16-bit Int	
		519 A	**[UsrDefBitWrdA]** A bitmap of Pars 520 [UsrDefBitWrdA0] through 535 [UsrDefBitWrdA15]. With a parameter it is possible to read or write all of the bits inside a word. Example: [UsrDefBitWrdA0] 0 [UsrDefBitWrdA1] $1 = 2^1 = 2$ [UsrDefBitWrdA2] 0 [UsrDefBitWrdA3] 0 [UsrDefBitWrdA4] 0 [UsrDefBitWrdA5] $1 = 2^5 = 32$ [UsrDefBitWrdA6] $1 = 2^6 = 64$ [UsrDefBitWrdA7] 0 [UsrDefBitWrdA8] 0 [UsrDefBitWrdA9] 0 [UsrDefBitWrdA10] $1 = 2^{10} = 1024$ [UsrDefBitWrdA11] 0 [UsrDefBitWrdA12] $1 = 2^{12} = 4096$ [UsrDefBitWrdA13] 0 [UsrDefBitWrdA14] 0 [UsrDefBitWrdA15] 0 [UsrDefBitWrdA] = 2 + 32 + 64 + 1024 + 4096 = 5218 Notes: The value of digital inputs 1…12 can be written to any of bits 0…7 ([UsrDefBitWrdA0]…[UsrDefBitWrdA7]) of this parameter. For example, to assign digital input 1 to bit 0 of this parameter, select option 37 “UsrDefined0” in parameter 133 [Digital In1 Sel]. The value of bits 0…7 of this parameter can be written to digital outputs 1…8, sequentially. In other words, when parameters 145 [Digital Out1 Sel]…152 [Digital Out8 Sel] are assigned option 11 “UserDefinedA”, bit 0 of this parameter is written to digital output 1, bit 1 is written to digital output 2, bit 2 is written to digital output 3, etc. Bits 14 and 15 of this parameter are written to relay outputs 1 and 2, respectively, when parameters 1392 [Relay Out 1 Sel] and 629 [Relay Out 2 Sel] are assigned option 11 “UserDefinedA”.	Default: Min/Max:	0 0 / 65535	16-bit Int	520 - 535

Table 7 - Utility File (continued)

File	Group	No.	Parameter Name & Description See page 20 for symbol descriptions	Values		Data Type	Related
UTILITY	User Defined	520 521 522 523 524 525 526 527 528 529 530 531 532 533 534 535 A	**[UsrDefBitWrdA0]** **[UsrDefBitWrdA1]** **[UsrDefBitWrdA2]** **[UsrDefBitWrdA3]** **[UsrDefBitWrdA4]** **[UsrDefBitWrdA5]** **[UsrDefBitWrdA6]** **[UsrDefBitWrdA7]** **[UsrDefBitWrdA8]** **[UsrDefBitWrdA9]** **[UsrDefBitWrdA10]** **[UsrDefBitWrdA11]** **[UsrDefBitWrdA12]** **[UsrDefBitWrdA13]** **[UsrDefBitWrdA14]** **[UsrDefBitWrdA15]** Bit variables. The individual "User Defined" bits can be read or written to. It is possible to process a word with Par 519 [UsrDefBitWrdA] (see example). Note: You can read bits 0…7 of a digital input with Par 519 [UsrDefBitWrdA] and write all of the bits associated with [UsrDefBitWrdA] to a digital output.	Default: Min/Max:	0 0 / 1	16-bit Int	519
		536 A	**[UsrDefBitWrdB]** A bitmap of Pars 537 [UsrDefBitWrdB0] through 552 [UsrDefBitWrdB15]. With a parameter it is possible to read or write all of the bits inside a word. Example: [UsrDefBitWrdB0] 0 [UsrDefBitWrdB1] $1 = 2^1 = 2$ [UsrDefBitWrdB2] 0 [UsrDefBitWrdB3] 0 [UsrDefBitWrdB4] 0 [UsrDefBitWrdB5] $1 = 2^5 = 32$ [UsrDefBitWrdB6] $1 = 2^6 = 64$ [UsrDefBitWrdB7] 0 [UsrDefBitWrdB8] 0 [UsrDefBitWrdB9] 0 [UsrDefBitWrdB10] $1 = 2^{10} = 1024$ [UsrDefBitWrdB11] 0 [UsrDefBitWrdB12] $1 = 2^{12} = 4096$ [UsrDefBitWrdB13] 0 [UsrDefBitWrdB14] 0 [UsrDefBitWrdB15] 0 [UsrDefBitWrdB] = 2 + 32 + 64 + 1024 + 4096 = 5218 Notes: The value of bits 0…7 of this parameter can be written to digital outputs 1…8, sequentially. In other words, when parameters 145 [Digital Out1 Sel]…152 [Digital Out8 Sel] are assigned option 12 "UserDefinedB", bit 0 of this parameter is written to digital output 1, bit 1 is written to digital output 2, bit 2 is written to digital output 3, etc. Bits 14 and 15 of this parameter are written to relay outputs 1 and 2, respectively, when parameters 1392 [Relay Out 1 Sel] and 629 [Relay Out 2 Sel] are assigned option 12 "UserDefinedB"	Default: Min/Max:	0 0 / 65535	16-bit Int	537 - 552

Table 7 - Utility File (continued)

File	Group	No.	Parameter Name & Description See page 20 for symbol descriptions	Values		Data Type	Related
UTILITY	User Defined	537 538 539 540 541 542 543 544 545 546 547 548 549 550 551 552	**[UsrDefBitWrdB0]** **[UsrDefBitWrdB1]** **[UsrDefBitWrdB2]** **[UsrDefBitWrdB3]** **[UsrDefBitWrdB4]** **[UsrDefBitWrdB5]** **[UsrDefBitWrdB6]** **[UsrDefBitWrdB7]** **[UsrDefBitWrdB8]** **[UsrDefBitWrdB9]** **[UsrDefBitWrdB10]** **[UsrDefBitWrdB11]** **[UsrDefBitWrdB12]** **[UsrDefBitWrdB13]** **[UsrDefBitWrdB14]** **[UsrDefBitWrdB15]** A Bit variables. The individual "User Defined" bits can be read or written to. It is possible to process a word with Par 536 [UsrDefBitWrdB]. See the example in Par 536 [UsrDefBitWrdB]. Note: You can read bits 0…7 of a digital input with Par 536 [UsrDefBitWrdB] and write all of the bits associated with [UsrDefBitWrdB] to a digital output.	Default: Min/Max:	0 0 / 1	16-bit Int	536

Table 8 - Communications File

File	Group	No.	Parameter Name & Description See page 20 for symbol descriptions	Values		Data Type	Related
COMMUNICATIONS	Comm Control	589	**[DPI Baud Rate]** Shows the data transfer rate for attached field controller peripherals. "1" - 500 kbps	Default: Min/Max:	Read Only 1 / 1	16-bit Int	
		590	**[DPI Port Sel]** Selects which DPI port reference value (unscaled) will appear in Par 1343 [DPI Port Value].	Default: Options:	1 "DPI Port 1" 1 = "DPI Port 1" 2 = "DPI Port 2" 3 = "DPI Port 3" 4 = "DPI Port 4" 5 = "DPI Port 5"	16-bit Int	1343
		1321	**[DPI Fdbk Select]** Selects the feedback variable and DPI units displayed on the feedback line of the HIM. • 0 "Voltage" = Voltage feedback units are in V • 1 "Current" = Current feedback units are in %	Default: Options:	0 = "Voltage" 0 = "Voltage" 1 = "Current"	16-bit Int	
		1343	**[DPI Port Value]** Unscaled value of the DPI reference selected in Par 590 [DPI Port Sel].	Default: Min/Max:	Read Only –/+32767	16-bit Int	590
	Masks & Owners	591	**[Logic Mask]** Determines which ports can control the field controller. If the bit for a port is set to "0," the port will have no control functions except for stop. 0 = Control Masked, 1 = Control Permitted, x = Reserved.				
		592	**[Start Mask]** Controls which adapters can issue start commands.		See Par 591 [Logic Mask]		

Options	Reserved	Reserved	Reserved	Reserved	Reserved	Reserved	Reserved	Reserved	Reserved	Reserved	DPI Port 5	DPI Port 4	DPI Port 3	DPI Port 2	DPI Port 1	Digital In
Default	x	x	x	x	x	x	x	x	x	x	1	1	1	1	1	1
Bit	15	14	13	12	11	10	9	8	7	6	5	4	3	2	1	0

Table 8 - Communications File (continued)

File	Group	No.	Parameter Name & Description See page 20 for symbol descriptions	Values		Data Type	Related
COMMUNICATIONS	Masks & Owners	593	**[Jog Mask]** Controls which adapters can issue jog commands.		See Par 591 [Logic Mask]		
		594	**[Direction Mask]** Controls which adapters can issue forward/reverse direction commands.		See Par 591 [Logic Mask]		
		595	**[Reference Mask]** Controls which adapters can select a manual reference.		See Par 591 [Logic Mask]		
		596	**[Accel Mask]** Controls which adapters can select the acceleration ramp rates (Pars 660 [Accel Time 1] and 24 [Accel Time 2]) of the field controller.		See Par 591 [Logic Mask]		24, 660
		597	**[Fault Clr Mask]** Controls which adapters can clear a fault.		See Par 591 [Logic Mask]		
		598	**[MOP Mask]** Controls which adapters can issue MOP commands to the field controller.		See Par 591 [Logic Mask]		
		599	**[Local Mask]** Controls which adapters are allowed to take exclusive control of field controller logic commands (except stop). Exclusive "local" control can only be taken while the field controller is stopped.		See Par 591 [Logic Mask]		
		600	**[Stop Owner]** The adapters that are presently issuing a valid stop command. 0 = No Command, 1 = Issuing Command, x = Reserved.				

Options	Reserved	Reserved	Reserved	Reserved	Reserved	Reserved	Reserved	Reserved	Reserved	Reserved	DPI Port 5	DPI Port 4	DPI Port 3	DPI Port 2	DPI Port 1	Digital In
Default	x	x	x	x	x	x	x	x	x	x	0	0	0	0	0	0
Bit	15	14	13	12	11	10	9	8	7	6	5	4	3	2	1	0

		601	**[Start Owner]** The adapters that are presently issuing a valid start command.		See Par 600 [Stop Owner]		
		602	**[Jog Owner]** The adapters that are presently issuing a valid jog command.		See Par 600 [Stop Owner]		
		603	**[Direction Owner]** The adapter that currently has exclusive control of direction changes.		See Par 600 [Stop Owner]		
		604	**[Reference Owner]** The adapter that has the exclusive control of the reference source selection.		See Par 600 [Stop Owner]		
		605	**[Accel Owner]** The adapter that has exclusive control of the acceleration ramp rate (Pars 660 [Accel Time 1] and 24 [Accel Time 2]) for the field controller.		See Par 600 [Stop Owner]		24, 660
		606	**[Fault Clr Owner]** Adapter that is presently clearing a fault.		See Par 600 [Stop Owner]		
		607	**[MOP Owner]** Adapters that are currently issuing increases or decreases in MOP referenced.		See Par 600 [Stop Owner]		
		608	**[Local Owner]** Adapter that has requested exclusive control of all field controller logic functions. If an adapter is in local lockout, all other functions (except stop) on all other adapters are locked out and non–functional. Local control can only be obtained when the field controller is not running.		See Par 600 [Stop Owner]		
		609	**[Decel Owner]** The adapter that has exclusive control of the deceleration ramp rate (Pars 662 [Decel Time 1] and 32 [Decel Time 2]) for the field controller.		See Par 600 [Stop Owner]		32, 662

Table 8 - Communications File (continued)

File	Group	No.	Parameter Name & Description See page 20 for symbol descriptions	Values		Data Type	Related
COMMUNICATIONS	Masks & Owners	631	**[Decel Mask]** Controls which adapters can select the deceleration ramp rate (Pars 662 [Decel Time 1] and 32 [Decel Time 2]) of the field controller.		See Par 591 [Logic Mask]		32, 662
	DataLinks	610 611	**[Data In A1] – Link A Word 1** **[Data In A2] – Link A Word 2** Parameter number whose value will be written from a communications field controller data table. The number will not be updated until the field controller is stopped. See your communications option manual for datalink information.	Default: Min/Max:	0 (0 = "Disabled") 0 / 1410	16-bit Int	
		612 613	**[Data In B1] – Link B Word 1** **[Data In B2] – Link B Word 2**	See [Data In A1] – Link A Word 1.		16-bit Int	
		614 615	**[Data In C1] – Link C Word 1** **[Data In C2] – Link C Word 2**	See [Data In A1] – Link A Word 1.		16-bit Int	
		616 617	**[Data In D1] – Link D Word 1** **[Data In D2] – Link D Word 2**	See [Data In A1] – Link A Word 1.		16-bit Int	
		618 619	**[Data Out A1] – Link A Word 1** **[Data Out A2] – Link A Word 2** Parameter number whose value will be written to a communications field controller data table.	Default: Min/Max:	0 (0 = "Disabled") 0 / 1410	16-bit Int	
		620 621	**[Data Out B1] – Link B Word 1** **[Data Out B2] – Link B Word 2**	See [Data Out A1] – Link A Word 1.		16-bit Int	
		622 623	**[Data Out C1] – Link C Word 1** **[Data Out C2] – Link C Word 2**	See [Data Out A1] – Link A Word 1.		16-bit Int	
		624 625	**[Data Out D1] – Link D Word 1** **[Data Out D2] – Link D Word 2**	See [Data Out A1] – Link A Word 1.		16-bit Int	
		1319	**[Data In Val Sel]** Selects the Datalink parameter register to display in Par 1320 [Data In Sel Data].	Default: Min/Max:	610 610 / 617	16-bit Int	1320
		1320	**[Data In SelData]** Displays the value selected in Par 1319 [Data In Val Sel].	Default: Min/Max:	Read Only 0 / 2^{31}	32-bit Int	1319
	Security	591	**[Logic Mask]** Determines which ports can control the field controller. If the bit for a port is set to "0," the port will have no control functions except for stop. 0 = Control Masked, 1 = Control Permitted, x = Reserved.				
		1376	**[Logic Mask Act]** Indicates the status of the logic mask for the DPI ports. When bit 15 is set, network security is controlling the logic mask instead of Par 591 [Logic Mask]. 0 = Control Masked, 1 = Control Permitted, x = Reserved.		Read Only		591

Options	Reserved	Reserved	Reserved	Reserved	Reserved	Reserved	Reserved	Reserved	Reserved	Reserved	DPI Port 5	DPI Port 4	DPI Port 3	DPI Port 2	DPI Port 1	Digital In
Default	x	x	x	x	x	x	x	x	x	x	1	1	1	1	1	1
Bit	15	14	13	12	11	10	9	8	7	6	5	4	3	2	1	0

Options	Security	Reserved	Reserved	Reserved	Reserved	Reserved	Reserved	Reserved	Reserved	Reserved	DPI Port 5	DPI Port 4	DPI Port 3	DPI Port 2	DPI Port 1	Digital In
Default	0	x	x	x	x	x	x	x	x	x	1	1	1	1	1	1
Bit	15	14	13	12	11	10	9	8	7	6	5	4	3	2	1	0

Table 8 - Communications File (continued)

File	Group	No.	Parameter Name & Description See page 20 for symbol descriptions	Values	Data Type	Related
COMMUNICATIONS	Security	1377 A	**[Write Mask Act]** The status of write access for the DPI ports. When bit 15 is set, network security is controlling the write mask instead of Par 1378 [Write Mask Cfg]. 0 = Read Only, 1 = Write Permitted, x = Reserved.	Read Only		1378
		1378 A	**[Write Mask Cfg]** Enables/Disables parameter write access for the DPI ports. Masking of the Port that is writing to this parameter is prohibited. Changes to this parameter only become effective after power is cycled, the field controller is reset, or bit 15 of Par 1377 [Write Mask Act] transitions from "1" to "0". 0 = Read Only, 1 = Write Permitted, x = Reserved.			1377
		1379 A	**[Port Mask Act]** Bits 0 . . . 5 indicate status for DPI port communication. Bit 15 indicates when security software is controlling the parameter. 0 = Not Active, 1 - Active, x - Reserved.	Read Only		

1377 [Write Mask Act]

Options	Security	Reserved	Reserved	Reserved	Reserved	Reserved	Reserved	Reserved	Reserved	Reserved	DPI Port 5	DPI Port 4	DPI Port 3	DPI Port 2	DPI Port 1	Reserved
Default	0	x	x	x	x	x	x	x	x	x	1	1	1	1	1	x
Bit	15	14	13	12	11	10	9	8	7	6	5	4	3	2	1	0

1378 [Write Mask Cfg]

Options	Reserved	Reserved	Reserved	Reserved	Reserved	Reserved	Reserved	Reserved	Reserved	Reserved	DPI Port 5	DPI Port 4	DPI Port 3	DPI Port 2	DPI Port 1	Reserved
Default	x	x	x	x	x	x	x	x	x	x	1	1	1	1	1	x
Bit	15	14	13	12	11	10	9	8	7	6	5	4	3	2	1	0

1379 [Port Mask Act]

Options	Security	Reserved	Reserved	Reserved	Reserved	Reserved	Reserved	Reserved	Reserved	Reserved	DPI Port 5	DPI Port 4	DPI Port 3	DPI Port 2	DPI Port 1	Digital In
Default	0	x	x	x	x	x	x	x	x	x	1	1	1	1	1	1
Bit	15	14	13	12	11	10	9	8	7	6	5	4	3	2	1	0

Table 9 - Input / Output File

File	Group	No.	Parameter Name & Description See page 20 for symbol descriptions	Values			Data Type	Related
INPUT / OUTPUT	Analog Inputs	70 75 80	**[Anlg In1 Sel]** **[Anlg In2 Sel]** **[Anlg In3 Sel]** Selects the parameter to which a value will be written from the analog input. See Analog Input Configuration on page 133 for more information. Options:	Default: Default: Default:	1 = 0 = 0 =	"Current Ref A" "Off" "Off"	16-bit Int	
		71 76 81	**[Anlg In1 Config]** **[Anlg In2 Config]** **[Anlg In3 Config]** Selects the signal input (voltage or current) mode for the analog input. Configure switches S9, S10, and S11 on the control board according to the input signal used. The inputs of the field controller are factory set for voltage signals. See DIP Switch and Jumper Settings in the PowerFlex DC Field Controller Installation Instructions, publication 23PFC-IN001, for information on switch configuration. • "+/–10V" = A maximum voltage of ±10V is connected to the analog input. If the signal is used as a reference value, a polarity reversal can be used to reverse the operational direction of the field controller when Par 1322 [Direction Mode] = 1 "Bipolar". • "0-10V" = A maximum voltage of 10V is connected to the analog input. For reference values, only positive references are allowed. • "0 - 20mA" = A maximum current signal of 0. . .20 mA is connected to the analog input. The signal must be positive. • "4 to 20mA" = A current signal of 4. . .20 mA is connected to the analog input. The signal must be positive. See Analog Input Configuration on page 133 for more information.	Default: Options:	0 = 0 = 1 = 2 = 3 =	"+/–10V" "+/–10V" "0-10V" "0 - 20mA" "4 to 20mA"	16-bit Int	1322
		72 77 82	**[Anlg In1 Scale]** **[Anlg In2 Scale]** **[Anlg In3 Scale]** Scales the value in the corresponding [Anlg In*x* Sel] parameter. See Analog Input Configuration on page 133 for more information.	Default: Min/Max:	1.00 –/+10.00		Real	
		73 78 83	**[Anlg1 Tune Scale]** **[Anlg2 Tune Scale]** **[Anlg3 Tune Scale]** Fine tuning of the analog input when the maximum signal does not correspond exactly to the rated value. Scales according to the following equation: [Anlg Inx Sel] – [Anlg In*x* Offset] x [Anlg In*x* Scale] x [Ain*x* Tune Scale] See Analog Input Configuration on page 133 for more information.	Default: Min/Max:	1.00 0.10 / 10.00		Real	

0 =	"Off" (No signal)	9 =	"Neg Cur Lim" (Par 9)	18 =	"PI CentralV3" (Par 778)
1 =	"Volt Ref A" (Par 44)	10 =	"Jog Ref" (Par 266)	19 =	"PID Feedback" (Par 763)
2 =	"Volt Ref B" (Par 48)	11 =	"Adaptive Ref" (Par 183)	20 =	"Reserved"
3 =	"Trim Ramp" (Par 42)	12 =	"UserDefined0" (Par 503)	21 =	"Reserved"
4 =	"Trim Volt" (Par 43)	13 =	"UserDefined1" (Par 504)	22 =	"Volt Ratio" (Par 1017)
5 =	"Current Ref" (Par 39)	14 =	"UserDefined2" (Par 505)		
6 =	"Trim Current" (Par 40)	15 =	"UserDefined3" (Par 506)		
7 =	"TB Man Ref" (Par 267)	16 =	"Reserved"		
8 =	"Pos Cur Lim" (Par 8)	17 =	'PID Setpt 0" (Par 760)		

Table 9 - Input / Output File (continued)

File	Group	No.	Parameter Name & Description See page 20 for symbol descriptions	Values		Data Type	Related
INPUT / OUTPUT	Analog Inputs	74 79 84 A	**[Anlg In1 Offset]** **[Anlg In2 Offset]** **[Anlg In3 Offset]** Offset value for the analog inputs. If the input has an offset or if the variable assigned to the input already has a value although there is no input signal present, this can be compensated for by using the value in this parameter.	Default: Min/Max:	0 –32768/+32767	16-bit Int	
		259 260 261 A	**[Anlg In1 Tune]** **[Anlg In2 Tune]** **[Anlg In3 Tune]** Automatic fine tuning of the analog inputs. If the "Tune" command is given, parameter [Ain*x* Tune Scale] is automatically selected so that the input signal present, normally full scale, corresponds to the maximum variable value, such as the value of Par 175 [Load Rated Volt]. Two conditions are necessary for automatic fine tuning: • An input voltage greater than 1V or an input current greater than 2 mA. • Positive polarity. The value found is automatically set for the opposite direction for four quadrant field controllers. Note: The automatically calculated value can, if necessary, be modified manually in parameter [Ain*x* Tune Scale]. When using analog input tuning, Pars [Analog In*x* Scale] are normally set to 1.0.	Default: Options:	0 = "Ready" 0 = "Ready" 1 = "Tune"	16-bit Int	
		295 296 297	**[Anlg In1 Target]** **[Anlg In2 Target]** **[Anlg In3 Target]** Enables sampling for the analog inputs.	Default: Options:	0 = "Assigned" 0 = "Assigned" 1 = "Not Assigned"	16-bit Int	
		792 A	**[Anlg In1 Filter]** Analog input 1 filter.	Default: Min/Max: Units:	0 0 / 1000 ms	16-bit Int	
		801 A	**[Anlg In2 Filter]** Analog input 2 filter.	Default: Min/Max: Units:	0 0 / 1000 ms	16-bit Int	
		802 A	**[Anlg In3 Filter]** Analog input 3 filter.	Default: Min/Max: Units:	0 0 / 1000 ms	16-bit Int	
		1042	**[Anlg In1 Cmp]** Defines a reference point for the signal of analog input 1 around which a comparison range can be set (in Par 1043 [Anlg In1 Cmp Err]) and monitored. [Anlg In1 Cmp] = (comparison value) x 10000 / (max. reference value), where the values of "comparison" and "max. reference" are determined by the min/max of the related parameter selected in Par 70 [Anlg In1 Sel]. See Analog-input Signal Comparison on page 134 for more information.	Default: Min/Max:	0 – / +10000	16-bit Int	1043, 1044, 1045
		1043	**[Anlg In1 Cmp Err]** Defines a value above and below the value set in parameter 1042 [Anlg In1 Cmp] at which Par 1045 [Anlg In1 Cmp Eq] will transition. [Anlg In1 Cmp Err] = (tolerance value) x 10000 / (max. reference value), where the values of "tolerance" and "max. reference" are determined by the min/max of the parameter selected in Par 70 [Anlg In1 Sel]. See Analog-input Signal Comparison on page 134 for more information.	Default: Min/Max:	0 0 / 10000	16-bit Int	1042, 1044, 1045
		1044	**[Anlg In1 Cmp Dly]** Amount of time that must elapse, after the value in Par 1043 [Anlg In1 Cmp Err] has been reached, before Par 1045 [Anlg In1 Cmp Eq] transitions.	Default: Min/Max: Units:	0 0 / 65000 ms	16-bit Int	1042, 1043, 1045

Table 9 - Input / Output File (continued)

File	Group	No.	Parameter Name & Description See page 20 for symbol descriptions	Values		Data Type	Related
INPUT / OUTPUT	Analog Inputs	1045	**[Anlg In1 Cmp Eq]** Provides an indication, after the amount of time specified in Par 1044 [Anlg In1 Cmp Dly] has elapsed, when the value set in parameter 1043 [Anlg In1 Cmp Err] has been reached. • "0" = The value of analog input 1 is above or below the value set in Par 1043 [Anlg In1 Cmp Err]. • "1" = The value of analog input 1 is within the range set in Par 1043 [Anlg In1 Cmp Err]. See Analog-input Signal Comparison on page 134 for more information. Note: This parameter can be assigned to a digital output.	Default: Min/Max:	Read Only 0 / 1	16-bit Int	1042, 1043, 1044
		1404	**[Analog In1 Value]** Value of the signal at analog input 1. Units based on the value set in Par 71 [Anlg In1 Config].	Default: Min/Max: Units:	Read Only -/+20.00 V or mA	Real	71
		1405	**[Analog In2 Value]** Value of the signal at analog input 2. Units based on the value set in Par 76 [Anlg In2 Config].	Default: Min/Max: Units:	Read Only -/+20.00 V or mA	Real	76
		1406	**[Analog In3 Value]** Value of the signal at analog input 3. Units based on the value set in Par 81 [Anlg In3 Config].	Default: Min/Max: Units:	Read Only -/+20.00 V or mA	Real	81
	Analog Outputs	62 63 64 65	**[Anlg Out1 Scale]** **[Anlg Out2 Scale]** **[Anlg Out3 Scale]** **[Anlg Out4 Scale]** Scaling of the analog outputs.	Default: Min/Max:	1.00 –/ +10.00	Real	
		66 67 68 69	**[Anlg Out1 Sel]** **[Anlg Out2 Sel]** **[Anlg Out3 Sel]*** **[Anlg Out4 Sel]*** Selects the source of the value that controls the analog output. *This parameter is used to configure an analog output on the I/O Expansion circuit board. See Appendix F - Optional Analog and Digital I/O Expansion Circuit Board in the PowerFlex DC Drive User Manual, publication 20P-UM001. Options:	Default: Default: Default: Default:	12 = "Volt Fbk" 13 = "Output Curr" 18 = "Reserved" 14 = "Output Volts"	16-bit Int	

No.	Option (Par)	Scaling of Analog Output Value	No.	Option (Par)	Scaling of Analog Output Value
0 =	"Off" (Not used)	n/a	18 =	"Reserved"	
1 =	"Vlt Ref Out" (Par 385)	±10V = ±100% of Par 175 [Load Rated Volt]	19 =	"UserDefined0" (Par 503)	±10V = ±2047 in Par 503 [UserDefined0]
2 =	"Trim Ramp" (Par 42)	±10V = ±100% of Par 175 [Load Rated Volt]	20 =	"UserDefined1" (Par 504)	±10V = ±2047 in Par 504 [UserDefined1]
3 =	"Ramp In" (Par 110)	±10V = ±100% of Par 175 [Load Rated Volt]	21 =	"UserDefined4" (Par 507)	±10V = ±2047 in Par 507 [UserDefined4]
4 =	"Ramp Out" (Par 113)	±10V = ±100% of Par 175 [Load Rated Volt]	22 =	"UserDefined5" (Par 508)	±10V = ±2047 in Par 508 [UserDefined5]
5 =	"Vlt Draw Out" (Par 1018)	±10V = ±100% of Par 175 [Load Rated Volt]	23 =	"UserDefined6" (Par 509)	±10V = ±2047 in Par 509 [UserDefined6]
6 =	"Trim Volt" (Par 43)	±10V = ±100% of Par 175 [Load Rated Volt]	24 =	"Reserved"	
7 =	"Vlt Reg In" (Par 118)	±10V = ±100% of Par 175 [Load Rated Volt]	25 =	"PID Output" (Par 774)	±10V = ±10000 in Par 774 [PID Output]
8 =	"Vlt Reg Out" (Par 236)	±10V = ± 100% of Par 179 [Load Rated Curr]	26 =	"Reserved"	
9 =	"Sel Curr Ref" (Par 14)	±10V = ± 100% of Par 179 [Load Rated Curr]	27 =	"Reserved"	
10 =	"Trim Current" (Par 40)	±10V = ± 100% of Par 179 [Load Rated Curr]	28 =	"Filtered Vlt" (Par 924)	±10V = ±100% of Par 175 [Load Rated Volt]
11 =	"Curr Reg In" (Par 41)	±10V = ± 100% of Par 179 [Load Rated Curr]	29 =	"Filtered Cur" (Par 928)	±10V = ± 200% of Par 179 [Load Rated Curr]
12 =	"Volt Fbk" (Par 121)	±10V = ±100% of Par 175 [Load Rated Volt]	30 =	"Output Power" (Par 1052)	±10V = ± 200% of Par 179 [Load Rated Curr] x Par 175 [Load Rated Volt]
13 =	"Output Curr" (Par 199)	±10V = ± 200% of Par 179 [Load Rated Curr]			
14 =	"Output Volts" (Par 233)	±10V = ±100% of Par 175 [Load Rated Volt]			
15 =	"Analog In 1" (Par 70)	±10V = ±10V on Analog Input 1			
16 =	"Analog In 2" (Par 75)	±10V = ±10V on Analog Input 2			
17 =	"Analog In 3" (Par 80)	±10V = ±10V on Analog Input 3			

Table 9 - Input / Output File (continued)

File	Group	No.	Parameter Name & Description See page 20 for symbol descriptions	Values		Data Type	Related
INPUT / OUTPUT	Digital Inputs	133	**[Digital In1 Sel]**	Default:	2 = "Stop/CF"	16-bit Int	
		134	**[Digital In2 Sel]**	Default:	3 = "Start"		
		135	**[Digital In3 Sel]**	Default:	11 = "Jog"		
		136	**[Digital In4 Sel]**	Default:	1 = "Enable"(1)		
		137	**[Digital In5 Sel]**	Default:	17 = "Volt Sel 1"		
		138	**[Digital In6 Sel]**	Default:	18 = "Volt Sel 2"		
		139	**[Digital In7 Sel]**	Default:	19 = "Volt Sel 3"		
		140	**[Digital In8 Sel]**	Default:	31 = "Contactor"		
		141	**[Digital In9 Sel]***	Default:	0 = "Not Used"		
		142	**[Digital In10 Sel]***	Default:	0 = "Not Used"		
		143	**[Digital In11 Sel]***	Default:	0 = "Not Used"		
		144	**[Digital In12 Sel]***	Default:	0 = "Not Used"		
			Selects the function controlled by the digital input. See Option Definitions for [Digital Inx Sel] on page 74. *These parameters are used to configure the digital inputs on the I/O Expansion circuit board. Do not use these parameters if the I/O Expansion circuit board is not installed. Options:				

0 =	"Not Used" (Off)	19 =	"Volt Sel 3"	38 =	"UsrDefinedA1"	57 =	"Reserved"
1 =	"Enable" (1)(2)	20 =	"PI Enable"	39 =	"UsrDefinedA2"	58 =	"Reserved"
2 =	"Stop/CF" (2)	21 =	"PI Hold"	40 =	"UsrDefinedA3"	59 =	"Reserved"
3 =	"Start" (2)	22 =	"PI Reset"	41 =	"UsrDefinedA4"	60 =	"Reserved"
4 =	"Fwd/Reverse" (2)	23 =	"PI Invert"	42 =	"UsrDefinedA5"	61 =	"Reserved"
5 =	"Run" (2)	24 =	"Local"	43 =	"UsrDefinedA6"	62 =	"PI-PD Enable"
6 =	"Run Forward" (2)	25 =	"Acc2 & Dec2"	44 =	"UsrDefinedA7"	63 =	"Reserved"
7 =	"Run Reverse" (2)	26 =	"Accel 2"	45 =	"Reserved"	64 =	"Invert Flt"
8 =	"Run Level" (2)	27 =	"Decel 2"	46 =	"PD Enable"		
9 =	"RunFwd Level" (2)	28 =	"MOP Inc"	47 =	"PID SetptSel"		
10 =	"RunRev Level" (2)	29 =	"MOP Dec"	48 =	"PI Cent vs0"		
11 =	"Jog" (2)	30 =	"Fast Stop"	49 =	"PI Cent vs1"		
12 =	"Jog Forward" (2)	31 =	"Contactor" (3)	50 =	"Reserved"		
13 =	"Jog Reverse" (2)	32 =	"MOP Reset"	51 =	"Reserved"		
14 =	"Aux Fault"	33 =	"CurrReduce"	52 =	"Reserved"		
15 =	"Clear Faults"	34 =	"Reserved"	53 =	"Reserved"		
16 =	"Auto/Manual"	35 =	"Reserved"	54 =	"Reserved"		
17 =	"Volt Sel 1"	36 =	"Freeze Ramp"	55 =	"Reserved"		
18 =	"Volt Sel 2"	37 =	"UsrDefinedA0"	56 =	"Reserved"		

(1) A digital input (1…8 only) must be configured for "Enable".

(2) For digital inputs 9…12, this option displays as "Reserved", indicating that it is not available for use - do not select "Reserved" options.

(3)

ATTENTION: Contactor status can only be used by the device. Contactor status can not be used to initiate any external action or equipment damage and/or bodily injury can occur.

Table 9 - Input / Output File (continued)

File	Group	No.	Parameter Name & Description See page 20 for symbol descriptions	Values	Data Type	Related
INPUT / OUTPUT	Digital Inputs		**Option Definitions for [Digital In*x* Sel]** Note: When assigning digital inputs to certain options that are associated with parameters, those parameter values may be overwritten by the state of the digital input.			

Option	Description
Enable(1)(2)	Removing the enable input causes the motor to coast-to-stop without generating a fault.
Stop/CF(2)	Stops the device if running or jogging or clears a fault if the device is already stopped.
Start(2)	Issues a Start command, removal does not Stop the device (3-wire control).
Fwd/ Reverse(2)	Selects the operating direction of the device. 0 = Forward, 1 = Reverse
Run(2)	Issues a Start command, removal causes the drive to Stop (2-wire control).
Run Forward(2)	Issues a Run command in the Forward direction.
Run Reverse(2)	Issues a Run command in the Reverse direction.
Run Level(2)	Level sensitive Run command (no off-to-on transition required).
RunFwd Level(2)	Run Level command in the Forward direction.
RunRev Level(2)	Run Level command in the Reverse direction.
Jog(2)	Starts the device and runs at the speed in Par 266 [Jog Voltage], removal causes the device to Stop.
Jog Forward(2)	Issues a Jog command in the Forward direction.
Jog Reverse(2)	Issues a Jog command in the Reverse direction.
Aux Fault	Asserting causes an Auxiliary Input fault (F2).
Clear Faults	Issues a Clear Faults command.
Auto/Manual	Selects between Automatic and Manual speed reference values.
Volt Sel 1 - 3	Selects one of eight voltage references. Bit enumerations: 000 = Par 44 [Volt Ref A], 001 = Par 48 [Volt Ref B], 010 = Par 155 [Preset Volt 2], 011 = Par 156 [Preset Volt 3], 100 = Par 157 [Preset Volt 4], 101 = Par 158 [Preset Volt 5], 110 = Par 159 [Preset Volt 6], 111 = Par 160 [Preset Volt 7]
PI Enable	Enables/disables the PI block of the PID regulator (Par 769 [Enable PI]).
PI Hold	Enables/disables a hold on the PI output.
PI Reset	Asserting causes a reset of the PI output.
PI Invert	Asserting causes an inversion of the PI output.
Local	Enables exclusive device control by using the I/O Terminal Block only.
Acc2 & Dec2	Switches between the Accel/Decel 1 and Accel/Decel 2 ramp rates.
Accel 2	Switches between the Accel 1 and Accel 2 ramp rates.
Decel 2	Switches between the Decel 1 and Decel 2 ramp rates.
MOP Inc	Asserting causes the MOP reference to increment at the rate set in Par 22 [MOP Accel Time].
MOP Dec	Asserting causes the MOP reference to decrement at the rate set in Par 30 [MOP Decel Time].
Fast Stop	Causes the device to Stop at the rate set in Par 38 [Fast Stop Time].
Contactor	Indicates the status of the AC contactor. Must be assigned and asserted to run the device when Par 1391 [ContactorControl] = 1 "AC Cntcr".
MOP Reset	Asserting resets the MOP reference to zero.
CurrReduce	Turns on /off Curr Reduction using the reduced current limit set in Par 13 [Curr Red CurLim].
Freeze Ramp	Holds the voltage ramp at the present value (Par 373 [Freeze Ramp]).
UsrDefinedA0-7	Writes the value of the digital input to Pars 520 [UsrDefBitWrdA0]…527 [UsrDefBitWrdA7].
PD Enable	Enables/disables the PD block of the PID regulator (Par 770 [Enable PD]).
PI Cent vs0 - 1	In combination, the digital inputs set to "PI Central vs0" and "PI Central vs1", through binary selection, determine which of the four possible output values is used as the initial level of the integral component (corresponding to the initial diameter) of the PI block. See Par 780 [PI Central vs0] for binary selection values.
PI-PD Enable	Selection between PI and PD (Par 1258 [Enable PID]).
Invert Flt	Must be used when the digital input is wired to the status of an inverting fault device (fuse, circuit breaker, etc.). Removing the input causes an "Inverting Fault" (F37).

1 A digital input (1…8 only) must be configured for "Enable".
2 For digital inputs 9…12, this option is not available (displays as "Reserved").

Table 9 - Input / Output File (continued)

File	Group	No.	Parameter Name & Description See page 20 for symbol descriptions	Values		Data Type	Related
INPUT / OUTPUT	Digital Inputs	564	**[Dig In Status]** Status of the digital inputs. For each bit, 1 = Input Present, 0 = Input Not Present, x = Reserved		Read Only		

Options	Reserved	Reserved	Reserved	Reserved	Digital In12	Digital In11	Digital In10	Digital In9	Digital In8	Digital In7	Digital In6	Digital In5	Digital In4	Digital In3	Digital In2	Digital In1
Default	x	x	x	x	0	0	0	0	0	0	0	0	0	0	0	0
Bit	15	14	13	12	11	10	9	8	7	6	5	4	3	2	1	0

No.	Parameter Name & Description	Values		Data Type	Related
565 566 567 568 569 570 571 572 573 574 575 576	**[Dig In Term 1]** **[Dig In Term 2]** **[Dig In Term 3]** **[Dig In Term 4]** **[Dig In Term 5]** **[Dig In Term 6]** **[Dig In Term 7]** **[Dig In Term 8]** **[Dig In Term 9]** **[Dig In Term 10]** **[Dig In Term 11]** **[Dig In Term 12]** Status of the digital input. 0 = Low 1 = High	Default: Min/Max:	Read Only 0 / 1	16-bit Int	
1276 1277 1278 1279 1280 1281 1282 1283 1387 1388 1389 1390	**[Inversion In 1]** **[Inversion In 2]** **[Inversion In 3]** **[Inversion In 4]** **[Inversion In 5]** **[Inversion In 6]** **[Inversion In 7]** **[Inversion In 8]** **[Inversion In 9]** **[Inversion In 10]** **[Inversion In 11]** **[Inversion In 12]** Inverts the signal of the digital input.	Default: Options:	0 "Disabled" 0 = "Disabled" 1 = "Enabled"	16-bit Int	
1391	**[ContactorControl]** Selects the type of contactor to be controlled by the field controller. • "AC Cntcr" indicates an AC contactor is used. There is a 400 ms delay to power up before SCR firing can begin. The delay is needed to determine correct input voltage phasing. One (relay) digital output is used for control and one digital input is used for status.	Default: Options:	0 = "None" 0 = "None" 1 = "AC Cntcr"	16-bit Int	

IMPORTANT An AC input contactor can only be installed when the field controller is used in standalone mode. When the field controller is connected to and controlled by a PowerFlex® DC drive or SAR, an AC input contactor cannot be used with the field controller.

Table 9 - Input / Output File (continued)

File	Group	No.	Parameter Name & Description See page 20 for symbol descriptions	Values		Data Type	Related
INPUT / OUTPUT	Digital Outputs	145 146 147 148 149 150 151 152	**[Digital Out1 Sel]** **[Digital Out2 Sel]** **[Digital Out3 Sel]** **[Digital Out4 Sel]** **[Digital Out5 Sel]*** **[Digital Out6 Sel]*** **[Digital Out7 Sel]*** **[Digital Out8 Sel]*** Selects the source of the value that controls the digital output. See Option Definitions for [Digital Outx Sel], [Relay Out 1 Sel] and [Relay Out 2 Sel] on page 77. *These parameters are used to configure the digital outputs on the I/O Expansion circuit board. Options:	Default: Default: Default: Default: Default: Default: Default: Default:	5 = "Ready" 9 = "Fault" 2 = "Vlt Thresh" 4 = "CurrentLimit" 26 = "Alarm" 0 = "Not Used" 0 = "Not Used" 0 = "Not Used"	16-bit Int	

0 =	"Not Used" (Off)	9 =	"Fault"	18 =	"Input1 Cmp"	27 =	"Running"
1 =	"Vlt Zero Thr"	10 =	"Power Loss"	19 =	"Reserved"	28 =	"Jogging"
2 =	"Vlt Thresh"	11 =	"UserDefinedA"	20 =	"Reserved"	29 =	"Active"
3 =	"At Voltage"	12 =	"UserDefinedB"	21 =	"Accelerating"	30 =	"Reserved"
4 =	"CurrentLimit"	13 =	"Stop Control"	22 =	"Decelerating"	31 =	"Reserved"
5 =	"Ready"	14 =	"Reserved"	23 =	"Reserved"	32 =	"Wired FC En" (1)
6 =	"Ramp Pos"	15 =	"Reserved"	24 =	"Reserved"	33 =	"Wired FC Inv" (1)
7 =	"Ramp Neg"	16 =	"Reserved"	25 =	"Reserved"	34 =	"Wired FC Act" (1)
8 =	"Vlt Limited"	17 =	"Reserved"	26 =	"Alarm"		

(1) For use with PowerFlex DC Drive only.

Table 9 - Input / Output File (continued)

File	Group	No.	Parameter Name & Description See page 20 for symbol descriptions	Values	Data Type	Related
INPUT / OUTPUT	Digital Outputs		**Option Definitions for [Digital Out*x* Sel], [Relay Out 1 Sel] and [Relay Out 2 Sel]**			

Option	Description
Vlt Zero Thr	"0" indicates that the device is operating below the value set in Par 107 [Volt Zero Level], "1" indicates that the device is operating above Par 107 [Volt Zero Level].
Vlt Thresh	"0" indicates that the device is operating above the value set in Par 101 [Volt Thresh Pos], "1" indicates that the device is operating below Par 101 [Volt Thresh Pos].
At Voltage	"0" indicates that the actual voltage is within the range specified in Par 104 [At Voltage Error], "1" indicates that the actual voltage is outside the range specified in Par 104 [At Voltage Error].
CurrentLimit	"0" indicates that the device is not limiting output current, "1" indicates that the device is limiting the output current.
Ready	"1" indicates that the device is powered, Enabled and no Start Inhibits exist. The state of the assigned digital output matches the state of bit 2 "Ready" of Par 381 [Device Status 1].
Ramp Pos	"1" indicates that the actual voltage of the device is going positive. Follows the state of Par 346 [Curr Positive]. Not asserted until after the amount of time in Par 20 [Ramp Delay] has elapsed.
Ramp Neg	"1" indicates that the actual voltage of the device is going negative. Follows the state of Par 347 [Curr Negative]. Not asserted until after the amount of time in Par 20 [Ramp Delay] has elapsed.
Vlt Limited	"1" indicates that the voltage is being limited to the value of Par 3 [Max Volt Fwd], "0" indicates that the voltage is not being limited.
Fault	"0" indicates that a device fault has occurred. See Par 57 [FaultCode].
Power Loss	"0" indicates that the device has detected a loss of the internal power supply.
UserDefinedA	Indicates the status of Par 519 [UsrDefBitWrdA] (digital output 1 uses bit 0, digital output 2 uses bit 1, etc.). Par 1392 [Relay Out 1 Sel] uses bit 14 (only). Par 629 [Relay Out 2 Sel] uses bit 15 (only).
UserDefinedB	Indicates the status of Par 536 [UsrDefBitWrdB] (digital output 1 uses bit 0, digital output 2 uses bit 1, etc.). Par 1392 [Relay Out 1 Sel] uses bit 14 (only). Par 629 [Relay Out 2 Sel] uses bit 15 (only).
Stop Control	Energized ("1") at run and de-energized ("0") based on the value of Par 627 [Vlt 0 Trip Delay].
Accelerating	"1" indicates that the device is actively accelerating. The state of the assigned digital output matches the state of bit 4 "Accelerating" of Par 381 [Device Status 1] and the state of Par 1188 [Accel Status].
Decelerating	When set to "1" the device is actively decelerating. The state of the assigned digital output matches the state of bit 5 "Decelerating" of Par 381 [Device Status 1] and the state of Par 1189 [Decel Status].
Alarm	"0" indicates that a device alarm has occurred. See Par 1380 [Device Alarm 1].
Running	"1" indicates that the device is active in Run mode. The state of the assigned digital output matches the state of bit 2 "Running" of Par 382 [Device Status 2].
Jogging	"1" indicates that the device is active in Jog mode. The state of the assigned digital output matches the state of bit 3 "Jogging" of Par 382 [Device Status 2].
Active	"1" indicates that the device is active in Run or Jog mode. The state of the assigned digital output matches the state of bit 1 "Active" of Par 382 [Device Status 2].
Wired FC En	"1" indicates that the device power section is active and the output current is greater than 10% of the current reference.
Wired FC Inv	"1" indicates that the sign of current reference has changed and bridge inversion has been initiated.
Wired FC Act	"1" indicates that the forward bridge is active. "0" indicates that the reverse bridge is active.

Table 9 - Input / Output File (continued)

File	Group	No.	Parameter Name & Description See page 20 for symbol descriptions	Values	Data Type	Related
INPUT / OUTPUT	Digital Outputs	581	**[Dig Out Status]** Status of the standard digital outputs and relay outputs on the field controller and on the optional I/O Expansion circuit board (if present).	Read Only		
		629	**[Relay Out 2 Sel]** Selects the source of the value that controls the N.O. relay between the terminals 75 and 76. See "Option Definitions" on page 77. Options:	Default: 5 = "Ready"	16-bit Int	
		1267 1268 1269 1270 1271 1272 1273 1274	**[Inversion Out 1]** **[Inversion Out 2]** **[Inversion Out 3]** **[Inversion Out 4]** **[Inversion Out 5]** **[Inversion Out 6]** **[Inversion Out 7]** **[Inversion Out 8]** Reverses the digital output signal.	Default: 0 = "Disabled" Options: 0 = "Disabled" 1 = "Enabled"	16-bit Int	
		1275	**[Inversion Relay2]** Inverts the signal for Relay Output 2.	Default: 0 = "Disabled" Options: 0 = "Disabled" 1 = "Enabled"	16-bit Int	

Options	Relay Out2	Relay Out1	Reserved	Reserved	Reserved	Reserved	Reserved	Reserved	Digital Out8	Digital Out7	Digital Out6	Digital Out5	Digital Out4	Digital Out3	Digital Out2	Digital Out1
Default	0	0	x	x	x	x	x	x	0	0	0	0	0	0	0	0
Bit	15	14	13	12	11	10	9	8	7	6	5	4	3	2	1	0

0 =	"Not Used" (Off)	8 =	"Vlt Limited"	16 =	"Reserved"	24 =	"Reserved"
1 =	"Vlt Zero Thr"	9 =	"Fault"	17 =	"Reserved"	25 =	"Contactor"
2 =	"Vlt Thresh"	10 =	"Power Loss"	18 =	"Input1 Cmp"	26 =	"Alarm"
3 =	"At Voltage"	11 =	"UserDefinedA"	19 =	"Reserved"	27 =	"Running"
4 =	"CurrentLimit"	12 =	"UserDefinedB"	20 =	"Reserved"	28 =	"Jogging"
5 =	"Ready"	13 =	"Stop Control"	21 =	"Accelerating"	29 =	"Active"
6 =	"Ramp Pos"	14 =	"Reserved"	22 =	"Decelerating"		
7 =	"Ramp Neg"	15 =	"Reserved"	23 =	"Reserved"		

Table 9 - Input / Output File (continued)

File	Group	No.	Parameter Name & Description See page 20 for symbol descriptions	Values		Data Type	Related
INPUT / OUTPUT	Digital Outputs	1392	**[Relay Out 1 Sel]** Selects the source of the value that controls the N.O. relay between the terminals 35 and 36. See "Option Definitions" on page 77. Options:	Default:	25 = "Contactor"	16-bit Int	
		1393	**[Inversion Relay1]** Inverts the signal for Relay Output 1.	Default: Options:	0 = "Disabled" 0 = "Disabled" 1 = "Enabled"	16-bit Int	
	DPI Inputs	1323	**[DPI P1 Select]** Selects the destination of the reference value from DPI Port 1 (HIM on field controller cover, when installed).	Default: Options:	0 = "Off" 0 = "Off" 1 = "Volt Ref A" (Par 44) 2 = "Volt Ref B" (Par 48) 3 = "Trim Ramp" (Par 42) 4 = "Trim Volt" (Par 43) 5 = "Current Ref" (Par 39) 6 = "Trim Current" (Par 40) 7 = "Pos Cur Lim" (Par 8) 8 = "Neg Cur Lim" (Par 9)	16-bit Int	
		1324	**[DPI P2 Select]** Selects the destination of the reference value from DPI Port 2 (handheld, remote, and external communication [20-XCOMM-DC-BASE] option, when installed).	See Par 1323 [DPI P1 Select].		16-bit Int	
		1325	**[DPI P3 Select]** Selects the destination of the reference value from DPI Port 3 (handheld, remote, and external communication [20-XCOMM-DC-BASE] option, when installed).	See Par 1323 [DPI P1 Select].		16-bit Int	
		1326	**[DPI P4 Select]** Selects the destination of the reference value from DPI Port 4.	See Par 1323 [DPI P1 Select].		16-bit Int	
		1327	**[DPI P5 Select]** Selects the destination of the reference value from DPI Port 5 (communications adapter, when installed).	See Par 1323 [DPI P1 Select].		16-bit Int	

0 =	"Not Used" (Off)	8 =	"Vlt Limited"	16 =	"Reserved"	24 =	"Reserved"
1 =	"Vlt Zero Thr"	9 =	"Fault"	17 =	"Reserved"	25 =	"Contactor"
2 =	"Vlt Thresh"	10 =	"Power Loss"	18 =	"Input1 Cmp"	26 =	"Alarm"
3 =	"At Voltage"	11 =	"UserDefinedA"	19 =	"Reserved"	27 =	"Running"
4 =	"CurrentLimit"	12 =	"UserDefinedB"	20 =	"Reserved"	28 =	"Jogging"
5 =	"Ready"	13 =	"Stop Control"	21 =	"Accelerating"	29 =	"Active"
6 =	"Ramp Pos"	14 =	"Reserved"	22 =	"Decelerating"		
7 =	"Ramp Neg"	15 =	"Reserved"	23 =	"Reserved"		

Parameter Cross Reference – by Name

Name	No.	Group	Page
AC Line Freq	588	Device Data	30
AC Line Voltage	466	Device Data	30
Accel Mask	596	Masks & Owners	67
Accel Owner	605	Masks & Owners	67
Accel Time 1	660	Ramp Rates	43
Accel Time 2	24	Ramp Rates	42
Act Volt Filter	923	Volt Feedback	33
Actual Voltage	924	Volt Meters	29
Adaptive I Gain1	189	Adaptv Regulator	45
Adaptive I Gain2	191	Adaptv Regulator	46
Adaptive I Gain3	193	Adaptv Regulator	46
Adaptive Joint 1	186	Adaptv Regulator	45
Adaptive Joint 2	187	Adaptv Regulator	45
Adaptive P Gain1	188	Adaptv Regulator	45
Adaptive P Gain2	190	Adaptv Regulator	46
Adaptive P Gain3	192	Adaptv Regulator	46
Adaptive Ref	183	Adaptv Regulator	45
Adaptive Reg Typ	182	Adaptv Regulator	45
Adaptive Vlt 1	184	Adaptv Regulator	45
Adaptive Vlt 2	185	Adaptv Regulator	45
Adaptive Vlt En	181	Adaptv Regulator	45
Alpha Test	166	Test Generator	36
Analog In1 Value	1404	Analog Inputs	72
Analog In2 Value	1405	Analog Inputs	72
Analog In3 Value	1406	Analog Inputs	72
Anlg In 1 Filter	792	Analog Inputs	71
Anlg In2 Filter	801	Analog Inputs	71
Anlg In3 Filter	802	Analog Inputs	71
Anlg In1 Cmp	1042	Analog Inputs	71
Anlg In1 Cmp Dly	1044	Analog Inputs	71
Anlg In1 Cmp Eq	1045	Analog Inputs	72
Anlg In1 Cmp Err	1043	Analog Inputs	71
Anlg In1 Config	71	Analog Inputs	70
Anlg In1 Offset	74	Analog Inputs	71
Anlg In1 Scale	72	Analog Inputs	70
Anlg In1 Sel	70	Analog Inputs	70

Name	No.	Group	Page
Anlg In1 Target	295	Analog Inputs	71
Anlg In1 Tune	259	Analog Inputs	71
Anlg In2 Config	76	Analog Inputs	70
Anlg In2 Offset	79	Analog Inputs	71
Anlg In2 Scale	77	Analog Inputs	70
Anlg In2 Sel	75	Analog Inputs	70
Anlg In2 Target	296	Analog Inputs	71
Anlg In2 Tune	260	Analog Inputs	71
Anlg In3 Config	81	Analog Inputs	70
Anlg In3 Offset	84	Analog Inputs	71
Anlg In3 Scale	82	Analog Inputs	70
Anlg In3 Sel	80	Analog Inputs	70
Anlg In3 Target	297	Analog Inputs	71
Anlg In3 Tune	261	Analog Inputs	71
Anlg Out1 Scale	62	Analog Outputs	72
Anlg Out1 Sel	66	Analog Outputs	72
Anlg Out2 Scale	63	Analog Outputs	72
Anlg Out2 Sel	67	Analog Outputs	72
Anlg Out3 Scale	64	Analog Outputs	72
Anlg Out3 Sel	68	Analog Outputs	72
Anlg Out4 Scale	65	Analog Outputs	72
Anlg Out4 Sel	69	Analog Outputs	72
Anlg1 Tune Scale	73	Analog Inputs	70
Anlg2 Tune Scale	78	Analog Inputs	70
Anlg3 Tune Scale	83	Analog Inputs	70
Arm En Flux Pct	242	Control Config	42
At Voltage	394	Diagnostics	56
At Voltage Delay	105	Volt Regulator	39
At Voltage Error	104	Volt Regulator	39
At Zero Volt	395	Diagnostics	56
Autotune Status	451	Autotune	34
Aux Inp Flt Cfg	354	Alarms	61
CD Curr Thr	383	Current Reg	31
CD Factor I	840	Current Reg	31
CD Factor P	839	Current Reg	31
Clear Fault Que	263	Faults	60
ContactorControl	1391	Digital Inputs	75
Cur Lim Neg Out	11	Current Meters	29
Cur Lim Pos Out	10	Current Meters	29
Curr Limit Type	715	Load Limits	44
Curr Negative	347	Diagnostics	54
Curr Positive	346	Diagnostics	54
Curr Red CurLim	13	Load Limits	44
Curr Reduction	342	Curr Attributes	33
Current Filter	926	Curr Attributes	33
Current Lim Neg	9	Curr Attributes	32
Current Lim Pos	8	Curr Attributes	32
Current Limit	7	Curr Attributes	32
Current Rate Lim	12	Curr Attributes	32
Current Ref	39	Curr Attributes	33

Name	No.	Group	Page
Current Reg In	41	Current Meters	29
CurrLimit Active	349	Diagnostics	54
CurrReg Autotune	452	Autotune	34
Data In A1	610	Datalinks	68
Data In A2	611	Datalinks	68
Data In B1	612	Datalinks	68
Data In B2	613	Datalinks	68
Data In C1	614	Datalinks	68
Data In C2	615	Datalinks	68
Data In D1	616	Datalinks	68
Data In D2	617	Datalinks	68
Data In SelData	1320	Datalinks	68
Data In Val Sel	1319	Datalinks	68
Data Out A1	618	Datalinks	68
Data Out A2	619	Datalinks	68
Data Out B1	620	Datalinks	68
Data Out B2	621	Datalinks	68
Data Out C1	622	Datalinks	68
Data Out C2	623	Datalinks	68
Data Out D1	624	Datalinks	68
Data Out D2	625	Datalinks	68
DC Curr I	848	Current Reg	31
DC Curr I Base	850	Current Reg	31
DC Curr I in use	846	Current Reg	32
DC Curr P	847	Current Reg	31
DC Curr P Base	849	Current Reg	31
DC Curr P in use	845	Current Reg	32
Decel Mask	631	Masks & Owners	68
Decel Owner	609	Masks & Owners	67
Decel Time 1	662	Ramp Rates	43
Decel Time 2	32	Ramp Rates	43
Device Alarm 1	1380	Alarms	63
Device Checksum	332	Device Data	30
Device Logic Rslt	1328	Diagnostics	58
Device Size	465	Device Data	30
Device Status 1	381	Diagnostics	55
Device Status 2	382	Diagnostics	56
Device Type	300	Device Data	30
Dig In Status	564	Digital Inputs	75
Dig In Term 1	565	Digital Inputs	75
Dig In Term 10	574	Digital Inputs	75
Dig In Term 11	575	Digital Inputs	75
Dig In Term 12	576	Digital Inputs	75
Dig In Term 2	566	Digital Inputs	75
Dig In Term 3	567	Digital Inputs	75
Dig In Term 4	568	Digital Inputs	75
Dig In Term 5	569	Digital Inputs	75
Dig In Term 6	570	Digital Inputs	75
Dig In Term 7	571	Digital Inputs	75
Dig In Term 8	572	Digital Inputs	75

Name	No.	Group	Page
Dig In Term 9	573	Digital Inputs	75
Dig Out Status	581	Digital Outputs	78
Digital Curr Ref	862	Current Meters	30
Digital In1 Sel	133	Digital Inputs	73
Digital In10 Sel	142	Digital Inputs	73
Digital In11 Sel	143	Digital Inputs	73
Digital In12 Sel	144	Digital Inputs	73
Digital In2 Sel	134	Digital Inputs	73
Digital In3 Sel	135	Digital Inputs	73
Digital In4 Sel	136	Digital Inputs	73
Digital In5 Sel	137	Digital Inputs	73
Digital In6 Sel	138	Digital Inputs	73
Digital In7 Sel	139	Digital Inputs	73
Digital In8 Sel	140	Digital Inputs	73
Digital In9 Sel	141	Digital Inputs	73
Digital Out1 Sel	145	Digital Outputs	76
Digital Out2 Sel	146	Digital Outputs	76
Digital Out3 Sel	147	Digital Outputs	76
Digital Out4 Sel	148	Digital Outputs	76
Digital Out5 Sel	149	Digital Outputs	76
Digital Out6 Sel	150	Digital Outputs	76
Digital Out7 Sel	151	Digital Outputs	76
Digital Out8 Sel	152	Digital Outputs	76
Direction Mask	594	Masks & Owners	67
Direction Mode	1322	Reference Config	53
Direction Owner	603	Masks & Owners	67
DPI Baud Rate	589	Comm Control	66
DPI Fdbk Select	1321	Comm Control	66
DPI P1 Select	1323	DPI Inputs	79
DPI P2 Select	1324	DPI Inputs	79
DPI P3 Select	1325	DPI Inputs	79
DPI P4 Select	1326	DPI Inputs	79
DPI P5 Select	1327	DPI Inputs	79
DPI Port Sel	590	Comm Control	66
DPI Port Value	1343	Comm Control	66
Elapsed Lifetime	235	Device Data	30
Enable PD	770	PD Control	49
Enable PI	769	PI Control	47
Enable PID	1258	PID Control	51
Fast Stop Time	38	Stop Modes	44
Fault 1 Code	1351	Faults	61
Fault 1 Time	1361	Faults	61
Fault 10 Code	1360	Faults	61
Fault 10 Time	1370	Faults	61
Fault 2 Code	1352	Faults	61
Fault 2 Time	1362	Faults	61
Fault 3 Code	1353	Faults	61
Fault 3 Time	1363	Faults	61
Fault 4 Code	1354	Faults	61
Fault 4 Time	1364	Faults	61

Name	No.	Group	Page
Fault 5 Code	1355	Faults	61
Fault 5 Time	1365	Faults	61
Fault 6 Code	1356	Faults	61
Fault 6 Time	1366	Faults	61
Fault 7 Code	1357	Faults	61
Fault 7 Time	1367	Faults	61
Fault 8 Code	1358	Faults	61
Fault 8 Time	1368	Faults	61
Fault 9 Code	1359	Faults	61
Fault 9 Time	1369	Faults	61
Fault Amps	1371	Faults	61
Fault Clear	1347	Faults	60
Fault Clr Mask	597	Masks & Owners	67
Fault Clr Mode	1348	Faults	60
Fault Clr Owner	606	Masks & Owners	67
Fault Voltage	1374	Diagnostics	61
FaultCode	57	Device Data	30
Feed Fwd PID	758	PID Control	49
Feedback Offset	563	Colt Feedback	33
Filt Curr Pct	928	Current Meters	30
Firing Angle	165	Device Data	30
Freeze Ramp	373	Ramp Rates	43
Inversion In 1	1276	Digital Inputs	75
Inversion In 10	1388	Digital Inputs	75
Inversion In 11	1389	Digital Inputs	75
Inversion In 12	1390	Digital Inputs	75
Inversion In 2	1277	Digital Inputs	75
Inversion In 3	1278	Digital Inputs	75
Inversion In 4	1279	Digital Inputs	75
Inversion In 5	1280	Digital Inputs	75
Inversion In 6	1281	Digital Inputs	75
Inversion In 7	1282	Digital Inputs	75
Inversion In 8	1283	Digital Inputs	75
Inversion In 9	1387	Digital Inputs	75
Inversion Out 1	1267	Digital Outputs	78
Inversion Out 2	1268	Digital Outputs	78
Inversion Out 3	1269	Digital Outputs	78
Inversion Out 4	1270	Digital Outputs	78
Inversion Out 5	1271	Digital Outputs	78
Inversion Out 6	1272	Digital Outputs	78
Inversion Out 7	1273	Digital Outputs	78
Inversion Out 8	1274	Digital Outputs	78
Inversion Relay1	1393	Digital Outputs	79
Inversion Relay2	1275	Digital Outputs	78
Jog Mask	593	Masks & Owners	67
Jog Off Delay	1409	Discrete Volts	38
Jog Owner	602	Masks & Owners	67
Jog Ramp Time	1410	Ramp Rates	44
Jog Voltage	266	Discrete Volts	38
Language	302	Device Memory	53

Name	No.	Group	Page
Last Stop Source	1402	Diagnostics	60
Load Curr Ref	17	Current Meters	29
Load Rated Curr	179	Load Data	31
Load Rated Volt	175	Load Data	31
Local Mask	599	Masks & Owners	67
Local Owner	608	Masks & Owners	67
Lock Volt Integ	348	Volt Regulator	41
Logic Mask	591	Masks & Owners Security	66 68
Logic Mask Act	1376	Security	68
Man Ref Preload	210	HIM Ref Config	53
Max Volt Fwd	3	Limits	37
Max Volt Rev	4	Limits	37
Maximum Voltage	2	Limits	37
Min Volt Fwd	5	Limits	37
Min Volt Rev	6	Limits	37
Minimum Voltage	1	Limits	37
MOP Accel Time	22	Ramp Rates	42
MOP Dec Active	397	Diagnostics	57
MOP Decel Time	30	Ramp Rates	43
MOP Inc Active	396	Diagnostics	56
MOP Mask	598	Masks & Owners	67
MOP Owner	607	Masks & Owners	67
MOP Ref Config	249	Reference Config	53
MOP Select	1375	Reference Config	53
OpenSCR Flt Cfg	216	Test Generator	37
OpenSCR Threshld	217	Test Generator	37
OpenSCR Trip Lvl	218	Test Generator	37
OpenSCR WarnLvl	215	Test Generator	37
Out Current	200	Current Meters	30
Out Current Pct	199	Current Meters	29
Output Power	1052	Device Data	30
Output Voltage	233	Device Data	30
OverCurrent Thr	584	Alarms	62
OverTemp Flt Cfg	365	Alarms	62
Overvolt Val	585	Alarms	62
Param Access Lvl	211	Device Memory	53
PD Deriv Filter	767	PD Control	49
PD Deriv Gain 1	766	PD Control	49
PD Deriv Gain 2	789	PD Control	49
PD Deriv Gain 3	791	PD Control	49
PD Output PID	421	PD Control	48
PD Prop Gain 1	768	PD Control	49
PD Prop Gain 2	788	PD Control	49
PD Prop Gain 3	790	PD Control	49
PI Central v sel	779	PI Control	48
PI Central v1	776	PI Control	47
PI Central v2	777	PI Control	47
PI Central v3	778	PI Control	48
PI Central vs0	780	PI Control	48

Name	No.	Group	Page
PI Central vs1	781	PI Control	48
PI Init Intgl Gn	734	PI Control	47
PI Init Prop Gn	793	PI Control	48
PI Integr Freeze	783	PI Control	48
PI Integral Gain	764	PI Control	47
PI Lower Limit	785	PI Control	48
PI Output	771	PI Control	47
PI Prop Gain PID	765	PI Control	47
PI Steady Thr	695	PI Control	47
PI Upper Limit	784	PI Control	48
PID Accel Time	1046	PID Control	51
PID Clamp	757	PID Control	49
PID Decel Time	1047	PID Control	51
PID Error	759	PID Control	49
PID Error Gain	1254	PID Control	51
PID Feedback	763	PID Control	50
PID Output	774	PID Control	50
PID Output Scale	773	PID Control	50
PID Output Sign	772	PID Control	50
PID Setpoint 0	760	PID Control	50
PID Setpoint 1	761	PID Control	50
PID Setpoint Sel	762	PID Control	50
PID Source	786	PID Control	51
PID Source Gain	787	PID Control	51
PID Steady Delay	731	PI Control	47
PID Target	782	PID Control	50
Port Mask Act	1379	Security	69
Powerup Delay	1345	Restart Modes	44
Preset Volt 1	154	Discrete Volts	38
Preset Volt 2	155	Discrete Volts	38
Preset Volt 3	156	Discrete Volts	38
Preset Volt 4	157	Discrete Volts	38
Preset Volt 5	158	Discrete Volts	38
Preset Volt 6	159	Discrete Volts	38
Preset Volt 7	160	Discrete Volts	38
Ramp Delay	20	Ramp Rates	42
Ramp In	110	Volt Meters	28
Ramp In Pct	111	Volt Meters	28
Ramp Out	113	Volt Meters	28
Ramp Out Pct	114	Volt Meters	28
Ramp Select 0	403	Diagnostics	57
Ramp Select 1	404	Diagnostics	57
Ramp Type Select	18	Ramp Rates	42
Load Rated Volt	175	Load Data	31
Real FF PID	418	PID Control	49
Ref Zero Level	106	Volt Regulator	39
Reference Mask	595	Masks & Owners	67
Reference Owner	604	Masks & Owners	67
Relay Out 1 Sel	1392	Digital Outputs	79
Relay Out 2 Sel	629	Digital Outputs	78

Name	No.	Group	Page
Reset Defaults	258	Device Memory	53
S Curve Accel 1	665	Ramp Rates	43
S Curve Accel 2	667	Ramp Rates	43
S Curve Decel 1	666	Ramp Rates	43
S Curve Decel 2	668	Ramp Rates	44
S Curve Time	19	Ramp Rates	42
Save HIM Ref	209	HIM Ref Config	53
Scale1 Div	487	Scale Blocks	52
Scale1 In Abs	492	Scale Blocks	52
Scale1 In Max	488	Scale Blocks	52
Scale1 In Min	489	Scale Blocks	52
Scale1 In Off	490	Scale Blocks	52
Scale1 Input	484	Scale Blocks	51
Scale1 Mul	486	Scale Blocks	52
Scale1 Out Off	491	Scale Blocks	52
Scale1 Output	485	Scale Blocks	51
Scale2 Div	556	Scale Blocks	52
Scale2 In Abs	561	Scale Blocks	52
Scale2 In Max	557	Scale Blocks	52
Scale2 In Min	558	Scale Blocks	52
Scale2 In Off	559	Scale Blocks	52
Scale2 Input	553	Scale Blocks	51
Scale2 Mul	555	Scale Blocks	52
Scale2 Out Off	560	Scale Blocks	52
Scale2 Output	554	Scale Blocks	51
Scale3 Div	1221	Scale Blocks	52
Scale3 In Abs	1226	Scale Blocks	52
Scale3 In Max	1222	Scale Blocks	52
Scale3 In Min	1223	Scale Blocks	52
Scale3 In Off	1224	Scale Blocks	52
Scale3 Input	1218	Scale Blocks	51
Scale3 Mul	1220	Scale Blocks	52
Scale3 Out Off	1225	Scale Blocks	52
Scale3 Output	1219	Scale Blocks	51
Scale4 Div	1230	Scale Blocks	52
Scale4 In Abs	1235	Scale Blocks	52
Scale4 In Max	1231	Scale Blocks	52
Scale4 In Min	1232	Scale Blocks	52
Scale4 In Off	1233	Scale Blocks	52
Scale4 Input	1227	Scale Blocks	51
Scale4 Mul	1229	Scale Blocks	52
Scale4 Out Off	1234	Scale Blocks	52
Scale4 Output	1228	Scale Blocks	51
Scale5 Div	1239	Scale Blocks	52
Scale5 In Abs	1244	Scale Blocks	52
Scale5 In Max	1240	Scale Blocks	52
Scale5 In Min	1241	Scale Blocks	52
Scale5 In Off	1242	Scale Blocks	52
Scale5 Input	1237	Scale Blocks	51
Scale5 Mul	1238	Scale Blocks	52

Name	No.	Group	Page
Scale5 Out Off	1243	Scale Blocks	52
Scale5 Output	1236	Scale Blocks	51
Scale6 Div	1248	Scale Blocks	52
Scale6 In Abs	1253	Scale Blocks	52
Scale6 In Max	1249	Scale Blocks	52
Scale6 In Min	1250	Scale Blocks	52
Scale6 In Off	1251	Scale Blocks	52
Scale6 Input	1246	Scale Blocks	51
Scale6 Mul	1247	Scale Blocks	52
Scale6 Out Off	1252	Scale Blocks	52
Scale6 Output	1245	Scale Blocks	51
SCR Diag Status	213	Test Generator	36
SCR Diag Test En	214	Test Generator	36
Selected CurrRef	14	Current Meters	44
Software Version	331	Configuration	30
SSC Flt Dly	855	Alarms	62
Start At Powerup	1344	Restart Modes	44
Start Inhibits	1403	Diagnostics	60
Start Mask	592	Masks & Owners	66
Start Owner	601	Masks & Owners	67
Status1 at Fault	1349	Faults	60
Status2 at Fault	1350	Faults	60
Stop Owner	600	Masks & Owners	67
TaskLoad 1 ms	1384	Diagnostics	59
TaskLoad 2 ms	1385	Diagnostics	59
TaskLoad 8 ms	1386	Diagnostics	59
TB Manual Ref	267	Discrete Volts	38
Test Angle	167	Test Generator	36
TestPoint Data	1382	Diagnostics	59
TestPoint Sel	1381	Diagnostics	59
Threshold Delay	103	Volt Regulator	39
Trim Current	40	Curr Attributes	33
Trim Ramp	42	Volt Reference	38
Trim Ramp Pct	378	Volt Reference	38
Trim Volt	43	Volt Reference	38
Trim Volt Pct	379	Volt Reference	38
TstGen Amplitude	60	Test Generator	35
TstGen Frequency	59	Test Generator	35
TstGen Offset	61	Test Generator	35
TstGen Output	58	Test Generator	35
UnderVlt Flt Dly	470	Alarms	62
UnderVolt Thresh	481	Alarms	62
UserDefined0	503	User Defined	64
UserDefined1	504	User Defined	64
UserDefined10	513	User Defined	64
UserDefined11	514	User Defined	64
UserDefined12	515	User Defined	64
UserDefined13	516	User Defined	64
UserDefined14	517	User Defined	64
UserDefined15	518	User Defined	64

Name	No.	Group	Page
UserDefined2	505	User Defined	64
UserDefined3	506	User Defined	64
UserDefined4	507	User Defined	64
UserDefined5	508	User Defined	64
UserDefined6	509	User Defined	64
UserDefined7	510	User Defined	64
UserDefined8	511	User Defined	64
UserDefined9	512	User Defined	64
UsrDefBitWrdA	519	User Defined	64
UsrDefBitWrdA0	520	User Defined	65
UsrDefBitWrdA1	521	User Defined	65
UsrDefBitWrdA10	530	User Defined	65
UsrDefBitWrdA11	531	User Defined	65
UsrDefBitWrdA12	532	User Defined	65
UsrDefBitWrdA13	533	User Defined	65
UsrDefBitWrdA14	534	User Defined	65
UsrDefBitWrdA15	535	User Defined	65
UsrDefBitWrdA2	522	User Defined	65
UsrDefBitWrdA3	523	User Defined	65
UsrDefBitWrdA4	524	User Defined	65
UsrDefBitWrdA5	525	User Defined	65
UsrDefBitWrdA6	526	User Defined	65
UsrDefBitWrdA7	527	User Defined	65
UsrDefBitWrdA8	528	User Defined	65
UsrDefBitWrdA9	529	User Defined	65
UsrDefBitWrdB	536	User Defined	65
UsrDefBitWrdB0	537	User Defined	66
UsrDefBitWrdB1	538	User Defined	66
UsrDefBitWrdB10	547	User Defined	66
UsrDefBitWrdB11	548	User Defined	66
UsrDefBitWrdB12	549	User Defined	66
UsrDefBitWrdB13	550	User Defined	66
UsrDefBitWrdB14	551	User Defined	66
UsrDefBitWrdB15	552	User Defined	66
UsrDefBitWrdB2	539	User Defined	66
UsrDefBitWrdB3	540	User Defined	66
UsrDefBitWrdB4	541	User Defined	66
UsrDefBitWrdB5	542	User Defined	66
UsrDefBitWrdB6	543	User Defined	66
UsrDefBitWrdB7	544	User Defined	66
UsrDefBitWrdB8	545	User Defined	66
UsrDefBitWrdB9	546	User Defined	66
UsrDsplyDiv0	51	User Defined	63
UsrDsplyMult0	50	User Defined	63
UsrValDiv1	54	User Defined	63
UsrValMult1	53	User Defined	63
Vlt 0 Trip Delay	627	Stop Modes	44
Vlt Cur Mode Sel	241	Control Config	42
Vlt Draw Out Pct	1019	Volt Meters	29
Vlt FB Filt BW	915	Volt Feedback	33

Name	No.	Group	Page
Vlt FB Filt Gain	914	Volt Feedback	33
Vlt Feedback Pct	121	Volt Meters	28
Vlt Limit Active	372	Diagnostics	54
Vlt Ref Sel Sts	1330	Diagnostics	59
Vlt Ref Zero En	124	Volt Regulator	40
Vlt Reg Err Pct	1011	Volt Meters	29
Vlt Reg Fdbk Pct	1009	Volt Meters	29
Vlt Reg Ki Base	94	Autotune	33
Vlt Reg Ki Outpt	100	Volt Regulator	39
Vlt Reg Kp Base	93	Autotune	33
Volt Reg Kp Outpt	99	Volt Regulator	39
Vlt Reg Neg Lim	96	Volt Regulator	39
Vlt Reg Out Pct	236	Volt Regulator	28
Vlt Reg P Filter	444	Volt Regulator	41
Vlt Reg Pos Lim	95	Volt Regulator	39
Vlt Select 0	400	Diagnostics	57
Vlt Select 1	401	Diagnostics	57
Vlt Select 2	402	Diagnostics	57
Vlt Zero I En	123	Volt Regulator	40
Vlt Zero P En	125	Volt Regulator	40
Vlt Zero P Gain	126	Volt Regulator	41
VltOut FiltBW	239	Volt Regulator	41
VltOut FiltGain	238	Volt Regulator	41
VltReg AntiBckup	643	Volt Regulator	41
VltReg Ki Pct	1035	Volt Regulator	34
VltReg Kp Pct	1034	Volt Regulator	34
VltReg NegLmOut	90	Current Meters	29
VltReg PosLmOut	89	Current Meters	29
Volt Draw Out	1018	Volt Meters	29
Volt Draw Out	1018	Volt Meters	29
Volt Feedback	122	Volt Meters	28
Volt Ramp En	245	Ramp Rates	43
Volt Ratio	1017	Volt References	38
Volt Ref A	44	Volt Meters	28
Volt Ref A Pct	47	Volt Meters	28
Volt Ref B	48	Volt Meters	28
Volt Ref B Pct	49	Volt Meters	28
Volt Ref Out	385	Volt Meters	28
Volt Ref Out Pct	384	Volt Meters	28
Volt Ref Source	1329	Diagnostics	58
Volt Reg Err	1010	Volt Meters	29
Volt Reg Fdbk	1008	Volt Meters	29
Volt Reg In	118	Volt Meters	28
Volt Reg In Pct	117	Volt Meters	28
Volt Reg Ki	88	Volt Regulator	39
Volt Reg Kp	87	Volt Regulator	38
Volt Thresh Neg	102	Volt Regulator	39
Volt Thresh Pos	101	Volt Regulator	39
Volt Threshold	393	Diagnostics	56
Volt Zero Delay	108	Volt Regulator	40

Name	No.	Group	Page
Volt Zero Level	107	Volt Regulator	40
Write Mask Act	1377	Security	69
Write Mask Cfg	1378	Security	69
Zero Current	353	Curr Attributes	33
Zero Ramp Input	345	Ramp Rates	43
Zero Ramp Output	344	Ramp Rates	43

Parameter Cross Reference – by Number

No.	Parameter Name	Group	Page
1	Minimum Voltage	Limits	37
2	Maximum Voltage	Limits	37
3	Max Volt Fwd	Limits	37
4	Max Volt Rev	Limits	37
5	Min Volt Fwd	Limits	37
6	Min Volt Rev	Limits	37
7	Current Limit	Curr Attributes	32
8	Current Lim Pos	Curr Attributes	32
9	Current Lim Neg	Curr Attributes	32
10	Cur Lim Pos Out	Current Meters	29
11	Cur Lim Neg Out	Current Meters	29
12	Current Rate Lim	Curr Attributes	32
13	Curr Red CurLim	Load Limits	44
14	Selected CurrRef	Current Meters	29
17	Load Curr Ref	Current Meters	29
18	Ramp Type Select	Ramp Rates	42
19	S Curve Time	Ramp Rates	42
20	Ramp Delay	Ramp Rates	42
22	MOP Accel Time	Ramp Rates	42
24	Accel Time 2	Ramp Rates	42
30	MOP Decel Time	Ramp Rates	43
32	Decel Time 2	Ramp Rates	43
38	Fast Stop Time	Stop Modes	44
39	Current Ref	Curr Attributes	33
40	Trim Current	Curr Attributes	33
41	Current Reg In	Current Meters	29
42	Trim Ramp	Volt Reference	38
43	Trim Volt	Volt Reference	38
44	Volt Ref A	Volt Meters	28
47	Volt Ref A Pct	Volt Meters	28
48	Volt Ref B	Volt Meters	28
49	Volt Ref B Pct	Volt Meters	28
50	UsrDsplyMult0	User Defined	63
51	UsrDsplyDiv0	User Defined	63
53	UsrValMult1	User Defined	63
54	UsrValDiv1	User Defined	63
57	FaultCode	Device Data	30
58	TstGen Output	Test Generator	35
59	TstGen Frequency	Test Generator	35
60	TstGen Amplitude	Test Generator	35
61	TstGen Offset	Test Generator	35
62	Anlg Out1 Scale	Analog Outputs	72
63	Anlg Out2 Scale	Analog Outputs	72
64	Anlg Out3 Scale	Analog Outputs	72
65	Anlg Out4 Scale	Analog Outputs	72
66	Anlg Out1 Sel	Analog Outputs	72
67	Anlg Out2 Sel	Analog Outputs	72
68	Anlg Out3 Sel	Analog Outputs	72
69	Anlg Out4 Sel	Analog Outputs	72
70	Anlg In1 Sel	Analog Inputs	70
71	Anlg In1 Config	Analog Inputs	70
72	Anlg In1 Scale	Analog Inputs	70
73	Anlg1 Tune Scale	Analog Inputs	70
74	Anlg In1 Offset	Analog Inputs	71
75	Anlg In2 Sel	Analog Inputs	70
76	Anlg In2 Config	Analog Inputs	70
77	Anlg In2 Scale	Analog Inputs	70
78	Anlg2 Tune Scale	Analog Inputs	70
79	Anlg In2 Offset	Analog Inputs	71
80	Anlg In3 Sel	Analog Inputs	70
81	Anlg In3 Config	Analog Inputs	70
82	Anlg In3 Scale	Analog Inputs	70
83	Anlg3 Tune Scale	Analog Inputs	70
84	Anlg In3 Offset	Analog Inputs	71
87	Volt Reg Kp	Volt Regulator	38
88	Volt Reg Ki	Volt Regulator	39
89	VltReg PosLmOut	Current Meters	29
90	VltReg NegLmOut	Current Meters	29
93	Vlt Reg Kp Base	Autotune	33
94	Vlt Reg Ki Base	Autotune	33
95	Vlt Reg Pos Lim	Volt Regulator	39
96	Vlt Reg Neg Lim	Volt Regulator	39
99	Vlt Reg Kp Outpt	Volt Regulator	39
100	Vlt Reg Ki Outpt	Volt Regulator	39
101	Volt Thresh Pos	Volt Regulator	39
102	Volt Thresh Neg	Volt Regulator	39
103	Threshold Delay	Volt Regulator	39
104	At Voltage Error	Volt Regulator	39
105	At Voltage Delay	Volt Regulator	39
106	Ref Zero Level	Volt Regulator	39
107	Volt Zero Level	Volt Regulator	40
108	Volt Zero Delay	Volt Regulator	40
110	Ramp In	Volt Meters	28
111	Ramp In Pct	Volt Meters	28
113	Ramp Out	Volt Meters	28
114	Ramp Out Pct	Volt Meters	28
117	Volt Reg In Pct	Volt Meters	28
118	Volt Reg In	Volt Meters	28
121	Vlt Feedback Pct	Volt Meters	28
122	Volt Feedback	Volt Meters	28
123	Vlt Zero I En	Volt Regulator	40
124	Vlt Ref Zero En	Volt Regulator	40
125	Vlt Zero P En	Volt Regulator	40
126	Vlt Zero P Gain	Volt Regulator	41
133	Digital In1 Sel	Digital Inputs	73
134	Digital In2 Sel	Digital Inputs	73
135	Digital In3 Sel	Digital Inputs	73
136	Digital In4 Sel	Digital Inputs	73
137	Digital In5 Sel	Digital Inputs	73
138	Digital In6 Sel	Digital Inputs	73
139	Digital In7 Sel	Digital Inputs	73
140	Digital In8 Sel	Digital Inputs	73
141	Digital In9 Sel	Digital Inputs	73
142	Digital In10 Sel	Digital Inputs	73
143	Digital In11 Sel	Digital Inputs	73
144	Digital In12 Sel	Digital Inputs	73
145	Digital Out1 Sel	Digital Outputs	76
146	Digital Out2 Sel	Digital Outputs	76
147	Digital Out3 Sel	Digital Outputs	76
148	Digital Out4 Sel	Digital Outputs	76
149	Digital Out5 Sel	Digital Outputs	76
150	Digital Out6 Sel	Digital Outputs	76
151	Digital Out7 Sel	Digital Outputs	76
152	Digital Out8 Sel	Digital Outputs	76
154	Preset Volt 1	Discrete Volts	38
155	Preset Volt 2	Discrete Volts	38
156	Preset Volt 3	Discrete Volts	38
157	Preset Volt 4	Discrete Volts	38
158	Preset Volt 5	Discrete Volts	38
159	Preset Volt 6	Discrete Volts	38
160	Preset Volt 7	Discrete Volts	38
165	Firing Angle	Device Data	30
166	Alpha Test	Test Generator	36
167	Test Angle	Test Generator	36
175	Load Rated Volt	Load Data	31
179	Load Rated Curr	Load Data	31
181	Adaptive Vlt En	Adaptv Regulator	45
182	Adaptive Reg Typ	Adaptv Regulator	45
183	Adaptive Ref	Adaptv Regulator	45
184	Adaptive Vlt 1	Adaptv Regulator	45
185	Adaptive Vlt 2	Adaptv Regulator	45
186	Adaptive Joint 1	Adaptv Regulator	45
187	Adaptive Joint 2	Adaptv Regulator	45
188	Adaptive P Gain1	Adaptv Regulator	45
189	Adaptive I Gain1	Adaptv Regulator	45
190	Adaptive P Gain2	Adaptv Regulator	46
191	Adaptive I Gain2	Adaptv Regulator	46

No.	Parameter Name	Group	Page
192	Adaptive P Gain3	Adaptv Regulator	46
193	Adaptive I Gain3	Adaptv Regulator	46
199	Out Current Pct	Current Meters	29
200	Out Current	Current Meters	30
209	Save HIM Ref	HIM Ref Config	53
210	Man Ref Preload	HIM Ref Config	53
211	Param Access Lvl	Device Memory	53
213	SCR Diag Test En	Test Generator	36
214	SCR Diag Status	Test Generator	36
215	OpenSCR WarnLvl	Test Generator	37
216	OpenSCR Flt Cfg	Test Generator	37
217	OpenSCR Threshld	Test Generator	37
218	OpenSCR Trip Lvl	Test Generator	37
233	Output Voltage	Device Data	30
235	Elapsed Lifetime	Device Data	30
236	Vlt Reg Out Pct	Volt Regulator	28
238	VltOut FiltGain	Volt Regulator	41
239	VltOut FiltBW	Volt Regulator	41
241	Vlt Cur Mode Sel	Control Config	42
242	Arm En Flux Pct	Control Config	42
245	Volt Ramp En	Ramp Rates	43
249	MOP Ref Config	Reference Config	53
258	Reset Defaults	Device Memory	53
259	Anlg In1 Tune	Analog Inputs	71
260	Anlg In2 Tune	Analog Inputs	71
261	Anlg In3 Tune	Analog Inputs	71
263	Clear Fault Que	Faults	60
266	Jog Voltage	Discrete Volts	38
267	TB Manual Ref	Discrete Volts	38
295	Anlg In1 Target	Analog Inputs	71
296	Anlg In2 Target	Analog Inputs	71
297	Anlg In3 Target	Analog Inputs	71
300	Device Type	Device Data	30
302	Language	Device Memory	53
331	Software Version	Configuration	30
332	Device Checksum	Device Data	30
342	Curr Reduction	Curr Attributes	33
344	Zero Ramp Output	Ramp Rates	43
345	Zero Ramp Input	Ramp Rates	43
346	Curr Positive	Diagnostics	54
347	Curr Negative	Diagnostics	54
348	Lock Volt Integ	Volt Regulator	41
349	CurrLimit Active	Diagnostics	54
353	Zero Current	Curr Attributes	33
354	Aux Inp Flt Cfg	Alarms	61
365	OverTemp Flt Cfg	Alarms	62
372	Vlt Limit Active	Diagnostics	54
373	Freeze Ramp	Ramp Rates	43

No.	Parameter Name	Group	Page
378	Trim Ramp Pct	Volt Reference	38
379	Trim Volt Pct	Volt Reference	38
381	Device Status 1	Diagnostics	55
382	Device Status 2	Diagnostics	56
384	Volt Ref Out Pct	Volt Meters	28
385	Volt Ref Out	Volt Meters	28
393	Volt Threshold	Diagnostics	56
394	At Voltage	Diagnostics	56
395	At Zero Volt	Diagnostics	56
396	MOP Inc Active	Diagnostics	56
397	MOP Dec Active	Diagnostics	57
400	Vlt Select 0	Diagnostics	57
401	Vlt Select 1	Diagnostics	57
402	Vlt Select 2	Diagnostics	57
403	Ramp Select 0	Diagnostics	57
404	Ramp Select 1	Diagnostics	57
418	Real FF PID	PID Control	49
421	PD Output PID	PD Control	48
444	Vlt Reg P Filter	Volt Regulator	41
451	Autotune Status	Autotune	34
452	CurrReg Autotune	Autotune	34
465	Device Size	Device Data	30
466	AC Line Voltage	Device Data	30
470	UnderVlt Flt Dly	Alarms	62
481	UnderVolt Thresh	Alarms	62
484	Scale1 Input	Scale Blocks	51
485	Scale1 Output	Scale Blocks	51
486	Scale1 Mul	Scale Blocks	52
487	Scale1 Div	Scale Blocks	52
488	Scale1 In Max	Scale Blocks	52
489	Scale1 In Min	Scale Blocks	52
490	Scale1 In Off	Scale Blocks	52
491	Scale1 Out Off	Scale Blocks	52
492	Scale1 In Abs	Scale Blocks	52
503	UserDefined0	User Defined	64
504	UserDefined1	User Defined	64
505	UserDefined2	User Defined	64
506	UserDefined3	User Defined	64
507	UserDefined4	User Defined	64
508	UserDefined5	User Defined	64
509	UserDefined6	User Defined	64
510	UserDefined7	User Defined	64
511	UserDefined8	User Defined	64
512	UserDefined9	User Defined	64
513	UserDefined10	User Defined	64
514	UserDefined11	User Defined	64
515	UserDefined12	User Defined	64
516	UserDefined13	User Defined	64
517	UserDefined14	User Defined	64
518	UserDefined15	User Defined	64

No.	Parameter Name	Group	Page
519	UsrDefBitWrdA	User Defined	64
520	UsrDefBitWrdA0	User Defined	65
521	UsrDefBitWrdA1	User Defined	65
522	UsrDefBitWrdA2	User Defined	65
523	UsrDefBitWrdA3	User Defined	65
524	UsrDefBitWrdA4	User Defined	65
525	UsrDefBitWrdA5	User Defined	65
526	UsrDefBitWrdA6	User Defined	65
527	UsrDefBitWrdA7	User Defined	65
528	UsrDefBitWrdA8	User Defined	65
529	UsrDefBitWrdA9	User Defined	65
530	UsrDefBitWrdA10	User Defined	65
531	UsrDefBitWrdA11	User Defined	65
532	UsrDefBitWrdA12	User Defined	65
533	UsrDefBitWrdA13	User Defined	65
534	UsrDefBitWrdA14	User Defined	65
535	UsrDefBitWrdA15	User Defined	65
536	UsrDefBitWrdB	User Defined	65
537	UsrDefBitWrdB0	User Defined	66
538	UsrDefBitWrdB1	User Defined	66
539	UsrDefBitWrdB2	User Defined	66
540	UsrDefBitWrdB3	User Defined	66
541	UsrDefBitWrdB4	User Defined	66
542	UsrDefBitWrdB5	User Defined	66
543	UsrDefBitWrdB6	User Defined	66
544	UsrDefBitWrdB7	User Defined	66
545	UsrDefBitWrdB8	User Defined	66
546	UsrDefBitWrdB9	User Defined	66
547	UsrDefBitWrdB10	User Defined	66
548	UsrDefBitWrdB11	User Defined	66
549	UsrDefBitWrdB12	User Defined	66
550	UsrDefBitWrdB13	User Defined	66
551	UsrDefBitWrdB14	User Defined	66
552	UsrDefBitWrdB15	User Defined	66
553	Scale2 Input	Scale Blocks	51
554	Scale2 Output	Scale Blocks	51
555	Scale2 Mul	Scale Blocks	52
556	Scale2 Div	Scale Blocks	52
557	Scale2 In Max	Scale Blocks	52
558	Scale2 In Min	Scale Blocks	52
559	Scale2 In Off	Scale Blocks	52
560	Scale2 Out Off	Scale Blocks	52
561	Scale2 In Abs	Scale Blocks	52
563	Feedback Offset	Volt Feedback	33
564	Dig In Status	Digital Inputs	75
565	Dig In Term 1	Digital Inputs	75
566	Dig In Term 2	Digital Inputs	75
567	Dig In Term 3	Digital Inputs	75
568	Dig In Term 4	Digital Inputs	75
569	Dig In Term 5	Digital Inputs	75

No.	Parameter Name	Group	Page
570	Dig In Term 6	Digital Inputs	75
571	Dig In Term 7	Digital Inputs	75
572	Dig In Term 8	Digital Inputs	75
573	Dig In Term 9	Digital Inputs	75
574	Dig In Term 10	Digital Inputs	75
575	Dig In Term 11	Digital Inputs	75
576	Dig In Term 12	Digital Inputs	75
581	Dig Out Status	Digital Outputs	78
584	OverCurrent Thr	Alarms	62
585	Overvolt Val	Alarms	62
588	AC Line Freq	Device Data	30
589	DPI Baud Rate	Comm Control	66
590	DPI Port Sel	Comm Control	66
591	Logic Mask	Masks & Owners Security	66 68
592	Start Mask	Masks & Owners	66
593	Jog Mask	Masks & Owners	67
594	Direction Mask	Masks & Owners	67
595	Reference Mask	Masks & Owners	67
596	Accel Mask	Masks & Owners	67
597	Fault Clr Mask	Masks & Owners	67
598	MOP Mask	Masks & Owners	67
599	Local Mask	Masks & Owners	67
600	Stop Owner	Masks & Owners	67
601	Start Owner	Masks & Owners	67
602	Jog Owner	Masks & Owners	67
603	Direction Owner	Masks & Owners	67
604	Reference Owner	Masks & Owners	67
605	Accel Owner	Masks & Owners	67
606	Fault Clr Owner	Masks & Owners	67
607	MOP Owner	Masks & Owners	67
608	Local Owner	Masks & Owners	67
609	Decel Owner	Masks & Owners	67
610	Data In A1	Datalinks	68
611	Data In A2	Datalinks	68
612	Data In B1	Datalinks	68
613	Data In B2	Datalinks	68
614	Data In C1	Datalinks	68
615	Data In C2	Datalinks	68
616	Data In D1	Datalinks	68
617	Data In D2	Datalinks	68
618	Data Out A1	Datalinks	68
619	Data Out A2	Datalinks	68
620	Data Out B1	Datalinks	68
621	Data Out B2	Datalinks	68
622	Data Out C1	Datalinks	68
623	Data Out C2	Datalinks	68
624	Data Out D1	Datalinks	68
625	Data Out D2	Datalinks	68
627	Vlt 0 Trip Delay	Stop Modes	44

No.	Parameter Name	Group	Page
629	Relay Out 2 Sel	Digital Outputs	78
631	Decel Mask	Masks & Owners	68
643	VltReg AntiBckup	Volt Regulator	41
660	Accel Time 1	Ramp Rates	43
662	Decel Time 1	Ramp Rates	43
665	S Curve Accel 1	Ramp Rates	43
666	S Curve Decel 1	Ramp Rates	43
667	S Curve Accel 2	Ramp Rates	43
668	S Curve Decel 2	Ramp Rates	44
695	PI Steady Thr	PI Control	47
715	Curr Limit Type	Load Limits	44
731	PID Steady Delay	PI Control	47
734	PI Init Intgl Gn	PI Control	47
757	PID Clamp	PID Control	49
758	Feed Fwd PID	PID Control	49
759	PID Error	PID Control	49
760	PID Setpoint 0	PID Control	50
761	PID Setpoint 1	PID Control	50
762	PID Setpoint Sel	PID Control	50
763	PID Feedback	PID Control	50
764	PI Integral Gain	PI Control	47
765	PI Prop Gain PID	PI Control	47
766	PD Deriv Gain 1	PD Control	49
767	PD Deriv Filter	PD Control	49
768	PD Prop Gain 1	PD Control	49
769	Enable PI	PI Control	47
770	Enable PD	PD Control	49
771	PI Output	PI Control	47
772	PID Output Sign	PID Control	50
773	PID Output Scale	PID Control	50
774	PID Output	PID Control	50
776	PI Central v1	PI Control	47
777	PI Central v2	PI Control	47
778	PI Central v3	PI Control	48
779	PI Central v sel	PI Control	48
780	PI Central vs0	PI Control	48
781	PI Central vs1	PI Control	48
782	PID Target	PID Control	50
783	PI Integr Freeze	PI Control	48
784	PI Upper Limit	PI Control	48
785	PI Lower Limit	PI Control	48
786	PID Source	PID Control	51
787	PID Source Gain	PID Control	51
788	PD Prop Gain 2	PD Control	49
789	PD Deriv Gain 2	PD Control	49
790	PD Prop Gain 3	PD Control	49
791	PD Deriv Gain 3	PD Control	49
792	Anlg In 1 Filter	Analog Inputs	71
793	PI Init Prop Gn	PI Control	48
801	Anlg In2 Filter	Analog Inputs	71

No.	Parameter Name	Group	Page
802	Anlg In3 Filter	Analog Inputs	71
838	CD Curr Thr	Current Reg	31
839	CD Factor P	Current Reg	31
840	CD Factor I	Current Reg	31
845	DC Curr P in use	Current Reg	32
846	DC Curr I in use	Current Reg	32
847	DC Curr P	Current Reg	31
848	DC Curr I	Current Reg	31
849	DC Curr P Base	Current Reg	31
850	DC Curr I Base	Current Reg	31
855	SSC Flt Dly	Alarms	62
862	Digital Curr Ref	Current Meters	30
914	Vlt FB Filt Gain	Volt Feedback	33
915	Vlt FB Filt BW	Volt Feedback	33
923	Act Volt Filter	Volt Feedback	33
924	Actual Voltage	Volt Meters	29
926	Current Filter	Curr Attributes	33
928	Filt Curr Pct	Current Meters	30
1008	Volt Reg Fdbk	Volt Meters	29
1009	Vlt Reg Fdbk Pct	Volt Meters	29
1010	Volt Reg Err	Volt Meters	29
1011	Vlt Reg Err Pct	Volt Meters	29
1017	Volt Ratio	Volt References	38
1018	Volt Draw Out	Volt Meters	29
1019	Vlt Draw Out Pct	Volt Meters	29
1034	VltReg Kp Pct	Autotune	34
1035	VltReg Ki Pct	Autotune	34
1042	Anlg In1 Cmp	Analog Inputs	71
1043	Anlg In1 Cmp Err	Analog Inputs	71
1044	Anlg In1 Cmp Dly	Analog Inputs	71
1045	Anlg In1 Cmp Eq	Analog Inputs	72
1046	PID Accel Time	PID Control	51
1047	PID Decel Time	PID Control	51
1052	Output Power	Device Data	30
1218	Scale3 Input	Scale Blocks	51
1219	Scale3 Output	Scale Blocks	51
1220	Scale3 Mul	Scale Blocks	52
1221	Scale3 Div	Scale Blocks	52
1222	Scale3 In Max	Scale Blocks	52
1223	Scale3 In Min	Scale Blocks	52
1224	Scale3 In Off	Scale Blocks	52
1225	Scale3 Out Off	Scale Blocks	52
1226	Scale3 In Abs	Scale Blocks	52
1227	Scale4 Input	Scale Blocks	51
1228	Scale4 Output	Scale Blocks	51
1229	Scale4 Mul	Scale Blocks	52
1230	Scale4 Div	Scale Blocks	52
1231	Scale4 In Max	Scale Blocks	52
1232	Scale4 In Min	Scale Blocks	52
1233	Scale4 In Off	Scale Blocks	52

No.	Parameter Name	Group	Page
1234	Scale4 Out Off	Scale Blocks	52
1235	Scale4 In Abs	Scale Blocks	52
1236	Scale5 Output	Scale Blocks	51
1237	Scale5 Input	Scale Blocks	51
1238	Scale5 Mul	Scale Blocks	52
1239	Scale5 Div	Scale Blocks	52
1240	Scale5 In Max	Scale Blocks	52
1241	Scale5 In Min	Scale Blocks	52
1242	Scale5 In Off	Scale Blocks	52
1243	Scale5 Out Off	Scale Blocks	52
1244	Scale5 In Abs	Scale Blocks	52
1245	Scale6 Output	Scale Blocks	51
1246	Scale6 Input	Scale Blocks	51
1247	Scale6 Mul	Scale Blocks	52
1248	Scale6 Div	Scale Blocks	52
1249	Scale6 In Max	Scale Blocks	52
1250	Scale6 In Min	Scale Blocks	52
1251	Scale6 In Off	Scale Blocks	52
1252	Scale6 Out Off	Scale Blocks	52
1253	Scale6 In Abs	Scale Blocks	52
1254	PID Error Gain	PID Control	51
1258	Enable PID	PID Control	51
1267	Inversion Out 1	Digital Outputs	78
1268	Inversion Out 2	Digital Outputs	78
1269	Inversion Out 3	Digital Outputs	78
1270	Inversion Out 4	Digital Outputs	78
1271	Inversion Out 5	Digital Outputs	78
1272	Inversion Out 6	Digital Outputs	78
1273	Inversion Out 7	Digital Outputs	78
1274	Inversion Out 8	Digital Outputs	78
1275	Inversion Relay2	Digital Outputs	78
1276	Inversion In 1	Digital Inputs	75
1277	Inversion In 2	Digital Inputs	75
1278	Inversion In 3	Digital Inputs	75
1279	Inversion In 4	Digital Inputs	75
1280	Inversion In 5	Digital Inputs	75
1281	Inversion In 6	Digital Inputs	75
1282	Inversion In 7	Digital Inputs	75
1283	Inversion In 8	Digital Inputs	75
1319	Data In Val Sel	Datalinks	68
1320	Data In SelData	Datalinks	68
1321	DPI Fdbk Select	Comm Control	66
1322	Direction Mode	Reference Config	53
1323	DPI P1 Select	DPI Inputs	79
1324	DPI P2 Select	DPI Inputs	79
1325	DPI P3 Select	DPI Inputs	79
1326	DPI P4 Select	DPI Inputs	79
1327	DPI P5 Select	DPI Inputs	79
1328	Device Logic Rslt	Diagnostics	58
1329	Volt Ref Source	Diagnostics	58

No.	Parameter Name	Group	Page
1330	Vlt Ref Sel Sts	Diagnostics	59
1343	DPI Port Value	Comm Control	66
1344	Start At Powerup	Restart Modes	44
1345	Powerup Delay	Restart Modes	44
1347	Fault Clear	Faults	60
1348	Fault Clr Mode	Faults	60
1349	Status1 at Fault	Faults	60
1350	Status2 at Fault	Faults	60
1351	Fault 1 Code	Faults	61
1352	Fault 2 Code	Faults	61
1353	Fault 3 Code	Faults	61
1354	Fault 4 Code	Faults	61
1355	Fault 5 Code	Faults	61
1356	Fault 6 Code	Faults	61
1357	Fault 7 Code	Faults	61
1358	Fault 8 Code	Faults	61
1359	Fault 9 Code	Faults	61
1360	Fault 10 Code	Faults	61
1361	Fault 1 Time	Faults	61
1362	Fault 2 Time	Faults	61
1363	Fault 3 Time	Faults	61
1364	Fault 4 Time	Faults	61
1365	Fault 5 Time	Faults	61
1366	Fault 6 Time	Faults	61
1367	Fault 7 Time	Faults	61
1368	Fault 8 Time	Faults	61
1369	Fault 9 Time	Faults	61
1370	Fault 10 Time	Faults	61
1371	Fault Amps	Faults	61
1374	Fault Voltage	Diagnostics	61
1375	MOP Select	Reference Config	53
1376	Logic Mask Act	Security	68
1377	Write Mask Act	Security	69
1378	Write Mask Cfg	Security	69
1379	Port Mask Act	Security	69
1380	Device Alarm 1	Alarms	63
1381	TestPoint Sel	Diagnostics	59
1382	TestPoint Data	Diagnostics	59
1384	TaskLoad 1 ms	Diagnostics	59
1385	TaskLoad 2 ms	Diagnostics	59
1386	TaskLoad 8 ms	Diagnostics	59
1387	Inversion In 9	Digital Inputs	75
1388	Inversion In 10	Digital Inputs	75
1389	Inversion In 11	Digital Inputs	75
1390	Inversion In 12	Digital Inputs	75
1391	ContactorControl	Digital Inputs	75
1392	Relay Out 1 Sel	Digital Outputs	79
1393	Inversion Relay1	Digital Outputs	79
1402	Last Stop Source	Diagnostics	60
1403	Start Inhibits	Diagnostics	60

No.	Parameter Name	Group	Page
1404	Analog In1 Value	Analog Inputs	72
1405	Analog In2 Value	Analog Inputs	72
1406	Analog In3 Value	Analog Inputs	72
1409	Jog Off Delay	Discrete Volts	38
1410	Jog Ramp Time	Ramp Rates	44

Notes:

Troubleshooting

This chapter provides information to guide you in troubleshooting the PowerFlex® DC Field Controller. Included is a list of faults and possible solutions to resolve the issue and a list of alarm descriptions and the causes.

Faults and Alarms

A fault is a condition that always stops the field controller and prevents it from starting until the fault condition is corrected. There are two fault types.

Table 10 - Fault Types and Descriptions

Type	Definition	Description
1	User Configurable	This type of fault allows you to configure a parameter to determine how the field controller responds to the error condition. • When the parameter is configured for a fault, the following events occur: a. The field controller stops. b. The error condition is displayed on the Human Interface Module (HIM) or signaled by a programmed digital output. c. The field controller is not allowed to start until the fault condition is corrected. • When the parameter is configured for an alarm, the following events occur: a. The error condition is displayed on the HIM or signaled by a programmed digital output. b. The field controller continues to run and/or be allowed to start. • When the parameter is configured for ignore or disable, the field controller does not recognize the error condition. In this case, the error condition does not display on the HIM or is not signaled by a programmed digital output.
2	Non-Configurable	This type of fault is always enabled and causes the field controller to stop running to protect the field controller and/or load from damage. In some cases, field controller or load repair can be required. The cause of the fault must be corrected before the fault can be cleared by using the HIM or programmed digital input. The fault will be reset on power-up after repair.

An alarm indicates a field controller error condition that does not stop the field controller, but can prevent it from starting. There are two types of alarms.

Table 11 - Alarm Types and Descriptions

Type	Definition	Description
1	User Configurable	This type of alarm indicates a field controller error condition but does not stop the field controller from starting or running. However, if this type of alarm is left uncorrected, a fault condition can eventually occur.
2	Non-Configurable	This type of alarm is always enabled and prevents the field controller from starting until the alarm condition is corrected.

Field Controller Status

The condition or state of your field controller is constantly monitored. Any changes are indicated through the status indicators and/or the HIM display (if present).

Figure 1 - Status Indicators

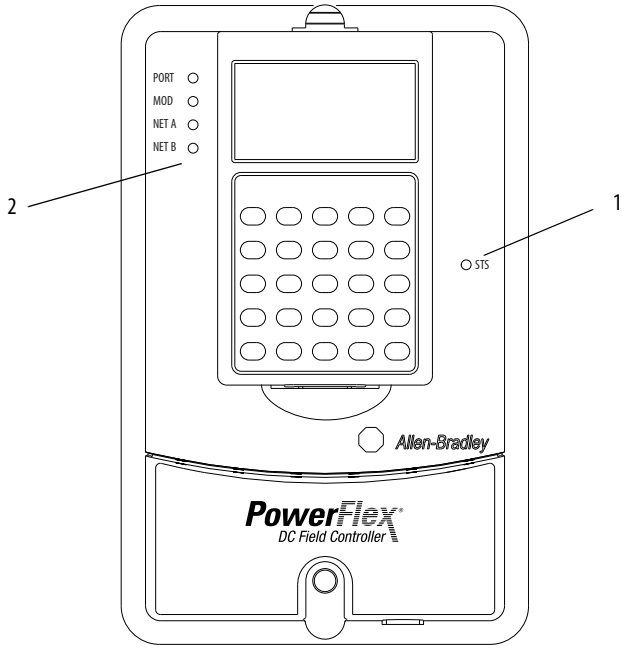

#	Name	Color	State	Description
1	STS (Status)	Green	Flashing	Field Controller ready, but not running and no faults are present.
			Steady	Field Controller running, no faults are present.
		Yellow	Flashing, Field Controller Stopped	A condition exists that is preventing the field controller from starting. Check parameter 1403 [Start Inhibits] and 1380 [Device Alarm 1].
			Flashing, Field Controller Running	An intermittent type 1 alarm condition is occurring. Check parameter 1380 [Device Alarm 1]. See Fault Descriptions on page 93 and/or Alarm Descriptions on page 98.
			Steady, Field Controller Running	A continuous type 1 alarm condition exists. Check parameter 1380 [Device Alarm 1]. See Fault Descriptions on page 93 and/or Alarm Descriptions on page 98.
		Red	Flashing	A fault has occurred. Check parameters 1351…1360 [Fault *x* Code] or view the Fault Queue on the HIM. See Fault Descriptions on page 93.
			Steady	A non-resettable, non-configurable fault has occurred. Check parameters 1351…1360 [Fault *x* Code] or view the Fault Queue on the HIM. See Fault Descriptions on page 93.
2	PORT	See the Communication Adapter User Manual.		Status of DPI port internal communication (if present).
	MOD			Status of communication module (when installed).
	NET A			Status of network (if connected).
	NET B			Status of secondary network (if connected).

HIM Indicators

The LCD HIM also provides visual notification of a fault or alarm condition.

Condition	Display
The field controller is indicating a fault. The LCD HIM immediately reports the fault condition by displaying the following: • "Faulted" appears in the status line • Fault number • Fault name • Time that has passed since the fault occurred Press "Esc" to regain HIM control.	F-> Faulted Auto - Fault - F 4 AC Undervoltage Time Since fault 0000:23:52
The field controller is indicating an alarm. The LCD HIM immediately reports the alarm condition by displaying the following: • Alarm name • Alarm bell graphic	F-> DigInCflctA Auto 0.0 volts Main Menu: Diagnostics Parameter Device Select

Manually Clear Faults

Follow these steps to manually clear a field controller fault.

1. Press Esc to acknowledge the fault.

   The fault information is removed so that you can use the HIM.
2. Address the condition that caused the fault.

   The cause must be corrected before the fault can be cleared.
3. Clear the fault by using one of these methods:
   - Press .
   - Cycle power to the field controller.
   - Set parameter 1347 [Fault Clear] to 1 "Clear Faults."
   - Select "Clear Faults" on the HIM Diagnostic menu.

Fault Descriptions

This table lists the name, number, and type and provides a description of each possible field controller fault.

Table 12 - Fault Types, Descriptions, and Actions

Fault Name	No.	Type[1]	Description/Possible Cause	Action
AC Undervoltage	4	2	There is an undervoltage on the power circuit. Possible causes include:	
			• Par 481 [UnderVolt Thresh] is set incorrectly.	Set Par 481 [UnderVolt Thresh] correctly and then reset the field controller in Par 1347 [Fault Clear].
			• The incoming voltage to the power terminals (U/V/W) of the field controller is too low due to: – The AC input voltage is too low or one phase is missing. – There are poor cable connections (for example terminals on contactor, choke, filter, is not properly connected).	• Verify AC input power level. • Check all connections.
			• The line fuses have tripped. – The AC input voltage dips or there is a high disturbance in the supply voltage.	1. Remove power from the field controller. 2. Eliminate AC input voltage dips and/or disturbances. 3. Replace any blown fuses.
			Note: This fault also occurs if the control board is separately powered and started without AC input voltage.	
Auxiliary Input	2	1	An auxiliary input interlock is open or a voltage (15...30V) or reference signal is missing for the digital input set to 14 "Aux Fault". Note: Configure with Par 354 [Aux Inp Flt Cfg].	Check remote wiring.
CurReg Tune Err	62	2	The current regulator autotuning procedure failed.	Check the value of Par 451 [Autotune Status]. • 1 "No Current" indicates that no current is detected during the autotune procedure. This event may be caused by the following: – The load is physically disconnected from the field controller output. Connect the load and rerun the autotune procedure. – The value of Par 849 [DC Curr P base] is too low. Increase the value of Par 849 and rerun the autotune procedure. – The maximum output voltage value is close to the load rated voltage and/or the load rated current is considerably lower than the field controller size. In this case, an autotune is not possible. However, you can try to manually configure the current regulator by setting the values of Pars 847 [DC Curr P] and 848 [DC Curr I] to a value above 50. Also set Par 839 [CD Factor P] and Par 840 [CD Factor I] equal to 1. • 3 "Aborted" indicates that the field controller has been disabled during the autotune procedure. Check for sources that could have disabled the field controller and rerun the autotune procedure. • 5 "Gain CalcErr" indicates that the autotune procedure failed because optimal gains could not be calculated by the autotune. This is typically due to an excessively high [DC Curr I] base value. It is recommended to lower the [DC Curr I] value and repeat the autotune procedure. If this does not solve the problem, you can try to manually configure the current regulator by setting the values of Pars 847 [DC Curr P] and 848 [DC Curr I] to a value above 50. Also set Par 839 [CD Factor P] and Par 840 [CD Factor I] equal to 1. • 7 "Timeout" indicates that the autotune procedure did not complete within the maximum allowed time (50 minutes). You can try to manually configure the current regulator by setting the values of Pars 847 [DC Curr P] and 848 [DC Curr I] to a value above 50. Also set Par 839 [CD Factor P] and Par 840 [CD Factor I] equal to 1.
Dsp Error	132	2	A non-resettable software error exists on the control board.	Cycle power to the field controller. If the problem persists, replace the control board.

Table 12 - Fault Types, Descriptions, and Actions (continued)

Fault Name	No.	Type[1]	Description/Possible Cause	Action
EEPROM Error	100	2	One of the following has occurred: • Parameter values could not be saved. • The control board was replaced and DIP switch S15 is set incorrectly for the field controller size. • You have upgraded from one major firmware revision to another (for example, v2.*xxx* to v3.*xxx*). Note: When this fault occurs, all parameters are reset to the default value.	1. If the control board is new, verify that DIP switch S15 is set correctly. See DIP Switch S15 Settings in the PowerFlex DC Field Controller Installation Instructions, publication 23PFC-IN001. 2. Reset the fault. 3. If this fault occurs again, cycle power to the field controller. 4. If the problem persists, replace the control board.
Hardware Fault	130	2	A non-resettable hardware error has occurred.	Cycle power to the field controller. If the problem persists, replace the control board.
Heatsink OvrTemp	8	2	The heatsink temperature is too high. Possible causes include:	
			• The surrounding air temperature is too high.	Lower the surrounding air temperature.
			• The field controller cooling fans have failed (field controllers > 17 A).	Check the fan fuses and fans. • If the fan fuses have failed, replace the fuses. (The fans are protected by the fuses in the power supply circuit and are contained on the switching power supply circuit board. See Control Power Circuit Protection in the PowerFlex DC Field Controller Installation Instructions, publication 23PFC-IN001.) • If the fans have failed, replace the fans.
			• The heatsink is dirty.	Clean the heatsink.
Interrupt Error	131	2	A non-resettable software error has occurred in the main application.	Report this error to Rockwell Automation Technical Support. Cycle power to the field controller. If this problem persists, replace the control circuit board.
Inverting Fault	37	2	A digital input (Pars 133…144) configured as 64 "Invert Flt" has been removed.	Check the status of the inverting fault field controller that is connected to the digital input.
Main Contactor	10	2	One of the following has occurred: • The main contactor failed to open or close in the proper amount of time (960 ms). • A digital input and/or relay output 1 is incorrectly wired and/or configured. • Wiring to a digital input configured for contactor has opened.	• Check all contactor wiring and field controller jumpers. Repair or replace the contactor if the problem persist. • Check the digital input and/or relay output 1 (terminals 35 and 36) wiring and configuration using Pars 1391 [ContactorControl], 1392 [Relay Out 1 Sel] and [Digital In*x* Sel]. See AC Input Contactors in the PowerFlex DC Field Controller Installation Instructions, publication 23PFC-IN001, for more information.
No Fault	0	–	When present in the fault queue in the field controller only, this fault indicates that there are currently no faults in the field controller.	Informational only.
		2	When displayed on the HIM, this fault can indicate one of the following issues: • The SA-SB terminal on a frame B field controller is incorrectly configured. • There is a possible problem with the control power.	For frame B field controllers only, verify that terminal SA-SB is properly configured for the control circuit input power input voltage used. A jumper must be in place for 115V AC control input power. See Control Circuit Input Power Wiring and Connections in the PowerFlex DC Field Controller Installation Instructions, publication 23PFC-IN001, for more configuration information.
Open SCR	90	1	An open SCR fault condition has been detected. This fault can only occur when Par 213 [SCR Diag Test En], bit 0 "OpenSCR Tst" is set (=1) and Par 216 [OpenSCR Flt Cfg] is set to "Fault" (2). The SCR (or SCR pair) that caused the fault are shown in Par 214 [SCR Diag Status].	• Verify that the correct values are set in Pars 217 [OpenSCR Threshld] and 218 [OpenSCR Trip Lvl]. • Replace the failed SCR field controllers.
Overcurrent	13	1	An over current has occurred in the field circuit. Possible causes include:	
			• There is a short-circuit or ground fault at the output of the field controller.	Verify that the output circuit wiring is correct.
			• The current regulator was not properly fine-tuned.	See Tune the Current Regulator on page 17.
			• The value of Par 584 [OverCurrent Thr] is too low.	Increase the value of Par 584 [OverCurrent Thr] accordingly.

Table 12 - Fault Types, Descriptions, and Actions (continued)

Fault Name	No.	Type[1]	Description/Possible Cause	Action
Overvoltage	25	2	The voltage feedback indicates a voltage level that is more than the value of Par 585 [Overvolt Val].	Increase the value of Par 585 [Overvolt Val].
			Note: Configurable with Par 585 [Overvolt Val].	
Params Defaulted	48	2	User parameters have been reset to their default values.	Informational only.
Port 1…5 Adapter	71…75	2	The communication card has a fault.	Check the DPI field controller event queue and fault information for the field controller.
Port 1…5 DPI Loss	81…85	2	The DPI port stopped communicating.	1. Check the HIM connection. 2. If adapter was not intentionally disconnected, check the wiring to the port. Replace the wiring, port expander, adapters, control board, or complete field controller as required. 3. If an adapter was intentionally disconnected and the bit for that adapter in Par 591 [Logic Mask] is set to "1", this fault occurs. To disable this fault, set the appropriate bit in [Logic Mask] for the adapter to "0."
Power Failure	3	2	Possible causes include:	
			IMPORTANT Remove power from the field controller before removing the I/O terminal blocks and/or fuses.	
			There is a fault in the 24V control board supply - the voltage is below the permitted value. In most cases, the cause of this fault is a problem with the external I/O wiring.	• Pull the plug-in I/O terminal blocks out of the control circuit board and reset the field controller in 1347 [Fault Clear]. If there are no other faults, check the I/O wiring for a short-circuit including the cable shielding. • Check fuses F1 and F2 on the switching power supply circuit board (frame A size field controllers only have one fuse - F1). Replace as necessary.* • Check varistor fuses F1, F2, and F3 on the pulse transformer circuit board for frame B size field controllers only. Replace as necessary.* • If this fault occurs again, an internal fault can be present. Contact your Rockwell Automation sales office. *Note: See Control Circuit Input Power Wiring and Connections in the PowerFlex DC Field Controller Installation Instructions, publication 23PFC-IN001, for fuse size information.
			The incoming voltage to the control power terminals (U2, V2) is too low due to: • The AC input voltage is too low • There are poor cable connections. • The fuse or fuses on the switching power supply circuit board have blown.	• Verify AC input power level. • Check all connections. • Check and replace the fuse or fuses on the switching power supple circuit board, if necessary.

Table 12 - Fault Types, Descriptions, and Actions (continued)

Fault Name	No.	Type[1]	Description/Possible Cause	Action
PTC Over Temp	16	1	The PTC has exceeded its temperature rating (as signaled by the thermistor that is connected to the field controller terminals 78 and 79). Possible causes include:	
			• The load does not have a thermistor and there is no resistor between terminals 78 and 79 on the field controller.	See Thermistors and Thermal Switches in the PowerFlex DC Field Controller Installation Instructions, publication 23PFC-IN001, for configuration information.
			• The cable between the thermistor connection on the load and terminals 78 and 79 on the field controller has been broken.	Check and repair any damage to or loss of connection of the thermistor cables between the load and field controller.
			• Possible causes for load overheating can also include one of the conditions that are listed here: – The load cycle is too extreme. – The surrounding air temperature at the site of the load is too high. – The load has an external fan and the fan failed. – The load does not have an external fan and the load is too large at low speeds. – The cooling effect of the internal fan on the load is too low for the load cycle.	Reduce the load. Reduce the surrounding air temperature. Replace the fan. Reduce the load cycle or fit the load with an external fan. Reduce the load cycle or fit the load with an external fan.
			Note: Configure with Par 365 [OverTemp Flt Cfg].	
Shorted SCR	89	2	A shorted SCR fault condition has been detected. This fault can only occur when Par 213 [SCR Diag Test En], bit 1 "OpenSCR Tst" is set (= 1). The SCR (or SCR pair) that caused the fault are shown in Par 214 [SCR Diag Status].	Replace failed SCR field controller or field controllers. See the PowerFlex Digital DC Drive - Frame A Hardware Service Manual, publication 20P-TG001, or PowerFlex Digital DC Drive - Frame B Hardware Service Manual, publication 20P-TG002, for details.
SSC Error	20	2	When Par 241 [Vlt Cur Mode Sel] = 3 'Dig Curr Reg' this fault indicates that a valid packet has not been received on the fiber optic interface within the time period defined by Par 855 [SSC Flt Dly]	• Check fiber optic cable connections. • Set Par 1381 [TestPoint Sel] = "584" and verify that the value displayed in Par 1382 [TestPoint Data] is 23040. If the value is different, the fiber optic interface board is not working or incorrectly mounted.
Sustained Curr	70	2	One of the following has occurred: • The line voltage is too low • A current bridge change command has not completed within 1 second	• Check the line voltage and frequency. • Check the main contactor connections if present.

(1) See page 90 for a description of fault types.

Table 13 - Fault Cross Reference by Number

No.(1)	Fault
2	Auxiliary Input
3	Power Failure
4	AC Undervoltage
8	Heatsink OvrTemp
10	Main Contactor
13	Overcurrent
16	PTC Over Temp
20	SSC Error
25	Overvoltage
37	Inverting Fault
48	Params Defaulted
62	CurReg Tune Err
70	Sustained Curr
71…75	Port 1 Adaptor
	Port 2 Adaptor
	Port 3 Adaptor
	Port 4 Adaptor
	Port 5 Adaptor

No.(1)	Fault
81…85	Port 1 DPI Loss
	Port 2 DPI Loss
	Port 3 DPI Loss
	Port 4 DPI Loss
	Port 5 DPI Loss
89	Shorted SCR
90	Open SCR
100	EEPROM Error
130	Hardware Fault
131	Interrupt Error
132	Dsp Error

(1) Faults that are not listed are reserved for future use.

Clear an Alarm

Alarms are automatically cleared when the condition that caused the alarm is no longer present.

Alarm Descriptions

The status of the alarms can be viewed in 1380 [Device Alarm 1]. This table lists the name and type and provides a description of each possible field controller alarm.

Table 14 - Alarm Descriptions and Actions

Alarm	Type	Description
Auxiliary Input	1	An auxiliary input interlock is open or a voltage (15...30V) or reference signal is missing for the digital input set to 14 "Aux Fault". See the "Auxiliary Input" fault description on page 93 for more information.
BipolarCflct	2	Par 1322 [Direction Mode] is set to "Bipolar" or "Reverse Dis" and one or more of these digital input functions is configured: "Fwd/Reverse," "Run Forward," "Run Reverse," "Jog Forward," "Jog Reverse," "Rev Dec Limit," or "Rev End Limit."
CntactrCflct	2	The contactor input function is in conflict: • When the field controller is used with a PowerFlex DC drive or Standalone Regulator, an AC contactor cannot be used on the field controller. In this case, Par 1391 [ContactorControl] must be set to 0 "None". • When Par 1391 [ContactorControl] is set to "AC Cntcr" and Par 241 [Vlt Cur Mode Sel] = 3 "Dig Curr Reg" and a digital output is configured as "Wired FC En," "Wired FC Inv," or "Wired FC Act." In this case, Par 1391 [ContactorControl] must be set to 0 "None". • When Par 1391 [ContactorControl] is set to "None", both relay outputs (Pars 1392 [Relay Out 1 Sel] and 629 [Relay Out 2 Sel] and all digital inputs ([Digital In*x* Sel]) cannot be set to "Contactor". • With [ContactorControl] set to "AC Cntcr", one relay output and one digital input must be set to "Contactor". Any relay output can be configured as contactor control and any digital input as contactor status. Therefore, to avoid possible conflicts, take care to program the parameter selection so that they match the relay output and/or digital input terminal block wiring correctly.
DigInCflctA	2	Digital input functions are in conflict. Combinations that are marked with a "" causes an alarm. Acc2/Dec2 | Accel 2 | Decel 2 | Jog 1/2 | Jog Fwd | Jog Rev | Fwd/Rev Acc2/Dec2 | | | | | | | | Accel 2 | | | | | | | | Decel 2 | | | | | | | | Jog 1/2 | | | | | | | | Jog Fwd | | | | | | | | Jog Rev | | | | | | | | Fwd/Rev | | | | | | | |

Table 14 - Alarm Descriptions and Actions (continued)

Alarm	Type	Description
DigInCflctB	2	One of these digital input conflicts exists: • A digital Start input has been configured without a Stop input • None of the digital inputs are configured for "Enable" • Other digital input functions are in conflict. Combinations that conflict are marked with a "⚠" and causes an alarm. (table below)
DigInCflctC	2	Multiple physical inputs have been configured to the same input function. Multiple configurations are not allowed for the following input functions. Fwd/Reverse, Run Reverse, Run Forward Jog Forward, Jog Reverse, Volt Sel 1 Volt Sel 2, Volt Sel 3, Acc2 & Dec2 Accel 2, Decel 2, Run
PTC Over Temp	1	The PTC has exceeded its temperature rating (as signaled by the thermistor that is connected to the field controller terminals 78 and 79). See the "PTC Over Temp" fault description on page 16 for more information.
Ref Cflct	2	Multiple field controller reference inputs, listed here, are set to the same value: – Pars 70, 75 and 80 [Anlg In*x* Sel] – Pars 1323…1327 [DPI P*x* Select] See the Voltage Reference Selection block diagram on page 108 for a graphical representation of the possible reference selections for the field controller.
Start At PowerUp	1	Par 1344 [Start At Powerup] is enabled. The field controller can start at any time after field controller power-up and the time that is specified in Par 1345 [Powerup Delay] has elapsed.

	Start	Stop-CF	Run	Run Fwd	Run Rev	Jog 1/2	Jog Fwd	Jog Rev	Fwd/ Rev
Start			⚠	⚠	⚠		⚠	⚠	
Stop-CF									
Run	⚠			⚠	⚠		⚠	⚠	
Run Fwd	⚠		⚠			⚠			⚠
Run Rev	⚠		⚠			⚠			⚠
Jog 1/2				⚠	⚠				
Jog Fwd	⚠		⚠						
Jog Rev	⚠		⚠						
Fwd/Rev				⚠	⚠				

Common Field Controller Symptoms and Corrective Actions

The following tables contain descriptions of common field controller symptoms and the possible solutions to correct the problem.

Field controller does not start

Field Controller Symptom	Action
An external "Start" command was issued, but the field controller does not start.	• Verify that no faults or alarms are displayed. If a fault or alarm is displayed, follow the corrective action provided (see Fault Descriptions on page 93 or Alarm Descriptions on page 98). • The external wiring to the programmed Start terminal block connection is missing. • Verify that +24V DC is present at terminal block connection. • Verify that 24V Supply Common is connected between terminals 18 and 16. • Verify that the configuration for Pars 133…144 [Digital Inx Sel] matches the switch wiring.
The field controller is not in a "Ready" state, is not "Enabled" or a "Stop" is asserted.	Check the Enable and Stop inputs. Verify that the wiring is correct (see I/O Wiring Examples in the PowerFlex DC Field Controller Installation Instructions, publication 23PFC-IN001).
External AC contactor, if used, has not closed.	If an AC Input contactor is used: • Verify that the field controller is "Ready", then verify that the required coil voltage is present at terminals 35 and 36 (Relay Output 1). If the coil voltage is present at terminals 35 or 36, then verify that proper voltage is at the AC Input contactor coil. • Inspect the contactor for mechanical problems. • Verify that Par 1391 [ContactorControl] is set to 1 "AC Cntcr". • Verify that the contactor and/or auxiliary contact is properly wired to a digital input on the field controller and that the appropriate digital input selection parameter (133…144 [Digital In*x* Sel]) is set to 31 "Contactor". • Verify that parameter 1392 [Relay Out 1 Sel] is set to 25 "Contactor".
The field controller starts from the HIM but does not start from the terminal block.	Check masks for Terminal Block control (see parameters 591 [Logic Mask] and 592 [Start Mask]).

Field controller activates but there is no output current

Field Controller Symptom	Action
The field controller activates but there is no output current.	• Verify the wiring to the analog input or inputs that are selected for voltage or current reference, depending on the setting of Par 241 [Vlt Cur Mode Sel] (see I/O Wiring Examples in the PowerFlex DC Field Controller Installation Instructions, publication 23PFC-IN001). • Verify the settings of switch S9 and Par 71 [Anlg In1 Config]; or S10 and Par 76 [Anlg In2 Config]; or S11 and Par 81 [Anlg In3 Config] (see DIP Switch and Jumper Settings in the PowerFlex DC Field Controller Installation Instructions, publication 23PFC-IN001). • Verify the voltage selection digital input or inputs and the respective input terminal voltage, if used. • Verify the analog input voltage that is displayed in parameters 1404 [Analog In1 Value], 1405 [Analog In2 Value] or 1406 [Analog In3 Value].

The field controller is unable to generate commanded current or voltage

Field Controller Symptom	Action
The field controller activates but is unable to generate commanded current or voltage.	If the motor does not achieve commanded speed, continue with following tests: • Check the voltage/current parameter limits: 2 [Maximum Voltage], 3 [Max Volt Fwd], 4 [Max Volt Rev], and 7 [Current Limit], 8 [Current Lim Pos], 9 [Current Lim Neg]. • Check the analog voltage input and voltage/current parameter reference values: 1404 [Analog In1 Value], 1405 [Analog In2 Value], 44 [Volt Ref A], 48 [Volt Ref B], 39 [Current Ref], and 40 [Trim Current]. • Check the setting of switch S9 and parameter 71 [Anlg In1 Config], S10 and 76 [Anlg In2 Config] or S11 and 81 [Anlg In3 Config]. • Tune the analog inputs using parameters 259…261 [Anlg Inx Tune] with the potentiometer set at max.

Testpoint Codes and Functions

Select a testpoint with Par 1381 [TestPoint Sel]. Values can be viewed with Par 1382 [TestPoint Data].

No. (1)	Description	Values		
		Minimum	Maximum	Default
566	Rx count	0	65535	0
567	Tx count			
568	BusLoss count			
569	Port 1 Timeout			
570	Port 2 Timeout			
571	Port 3 Timeout			
572	Port 4 Timeout			
573	Port 5 Timeout			
574	Port 6 Timeout			
575	Internal gain of P188 (x100)			
576	Internal gain of P189 (x100)			
577	Internal gain of P190 (x100)			
578	Internal gain of P191 (x100)			
579	Internal gain of P192 (x100)			
580	Internal gain of P193 (x100)			
581	Max DSP execution time (20 MHz counts)	0	833 (41.65 µs)	464 (23.2 µs)
582	The number of incorrect packets received from the Fiber-optic Interface circuit board fiber-optic connections.	0	65535	0
583	The number of 8 ms periods that have passed without having received any valid packets from the Fiber-optic Interface circuit board fiber-optic connections.			
584	The value returned by the Fiber-optic Interface option module when power is applied to the board. A value other than 23040 indicates that the board is configured but is not present or has not been properly installed.			

(1) Enter in Par 1381 [TestPoint Sel].

Notes:

Control Block Diagrams

Control block diagrams are graphical representations of parameter interactions and relationships as they relate to device control and configuration.

Parameter Type Identification

These conventions are used to identify the parameters shown in the block diagrams contained in this section.

Figure 2 - Example Parameter Type Identifiers

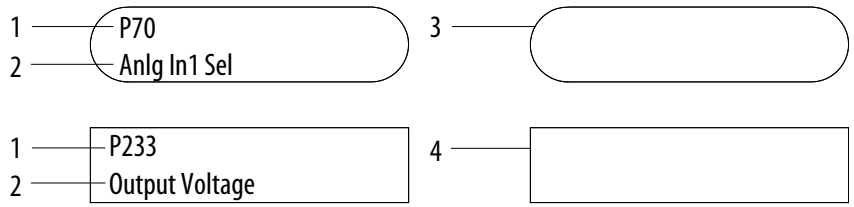

ID	Description
1	Parameter number
2	Parameter name
3	Read/write parameter
4	Read only parameter

PowerFlex DC Field Control Overview

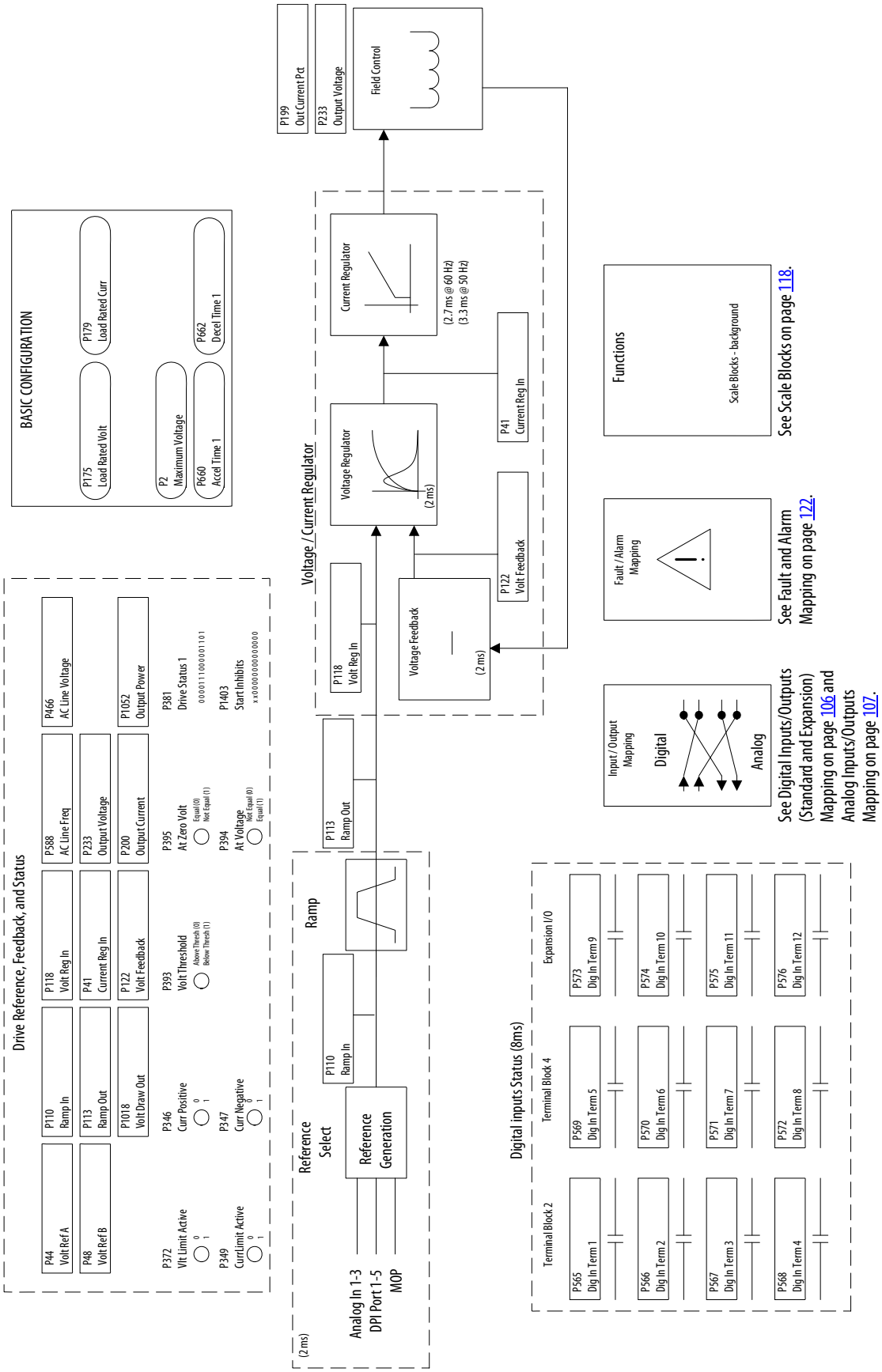

Digital Inputs/Outputs Standard and Expansion I/O (8 ms)

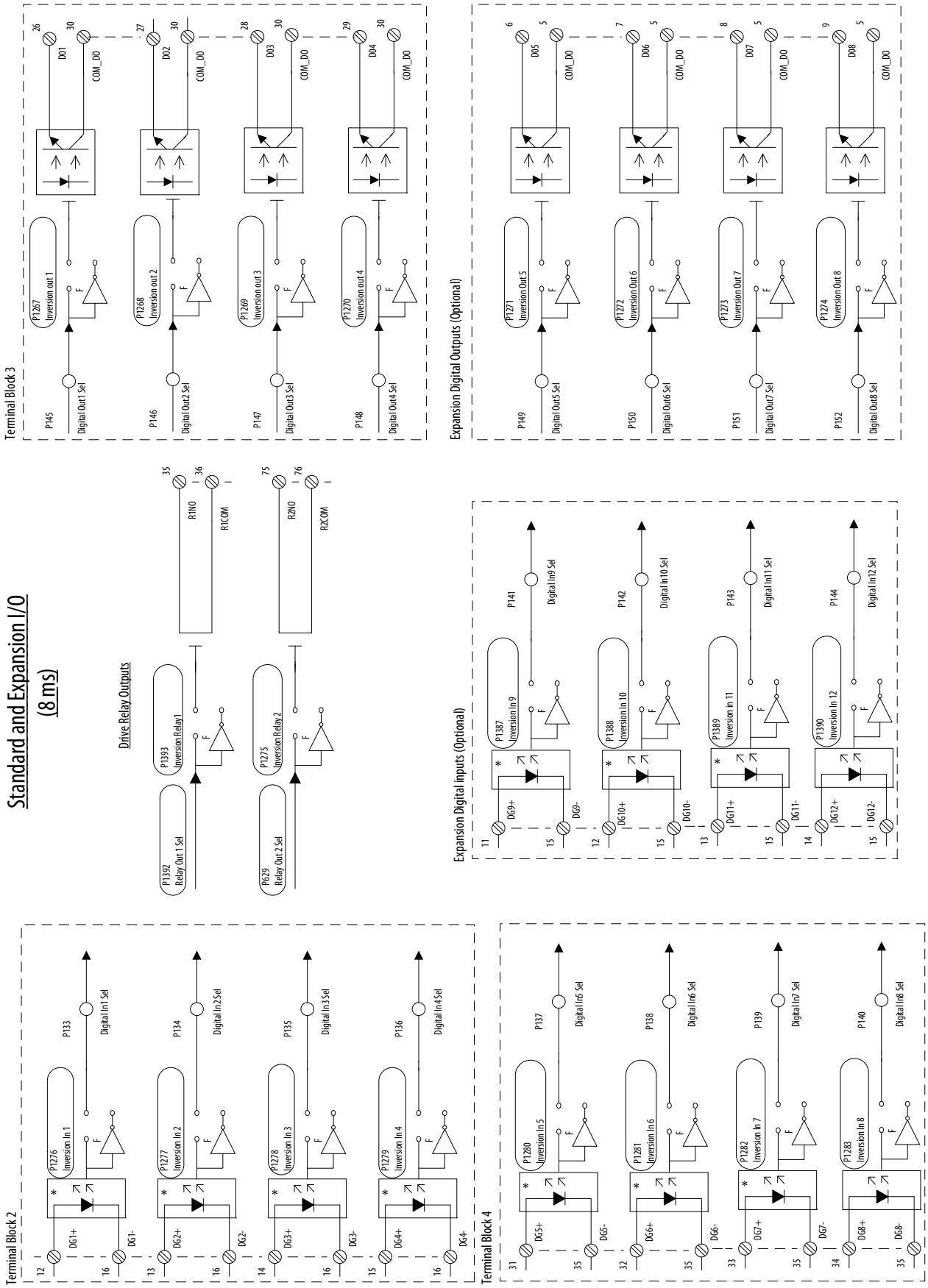

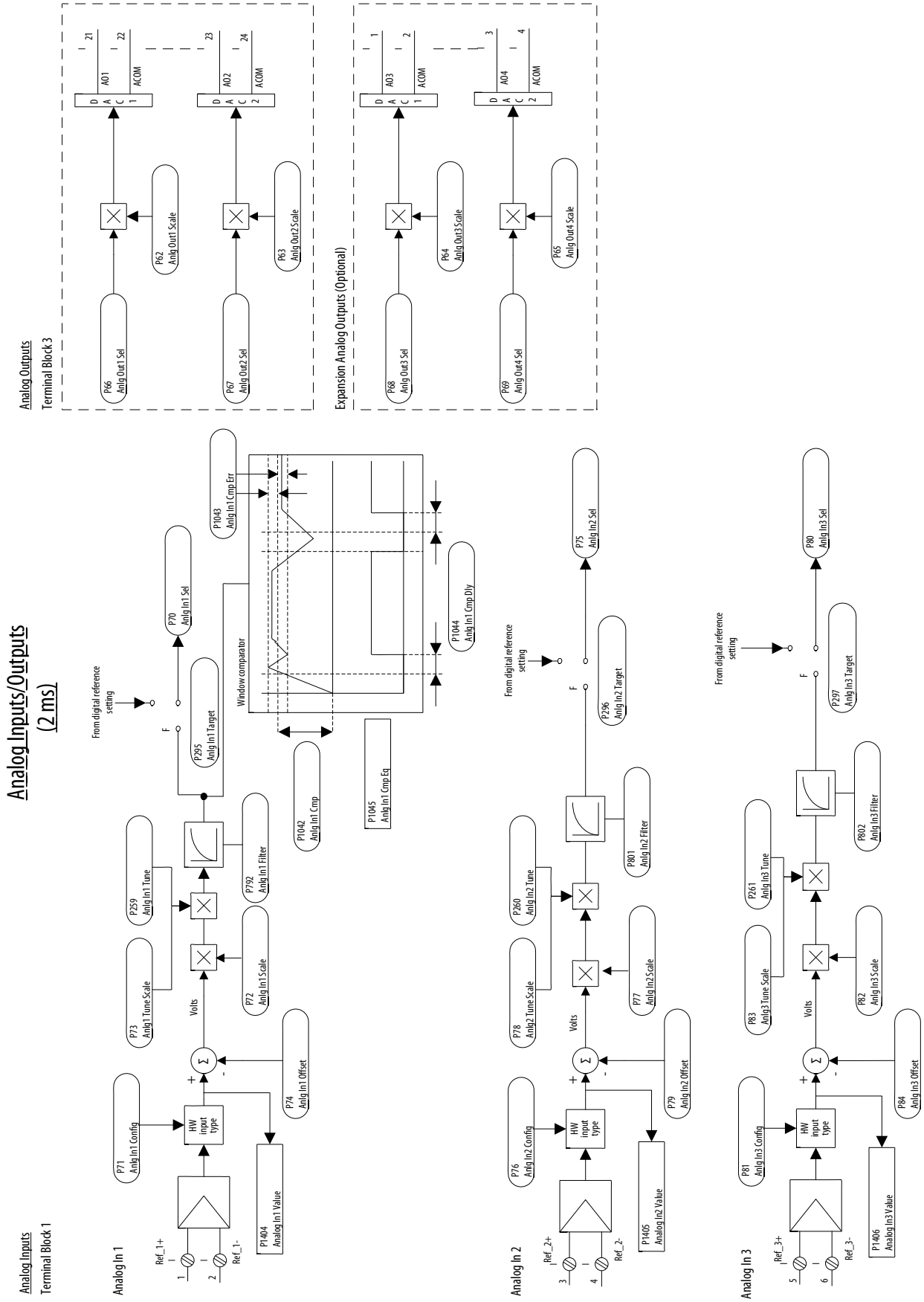
Analog Inputs/Outputs
(2 ms)
Analog Inputs
Terminal Block 1
Analog In 1
Ref_1+
Ref_1-
HW input type
P71 Anlg In1 Config
P73 Anlg1 Tune Scale
P259 Anlg In1 Tune
Volts
P72 Anlg In1 Scale
P792 Anlg In1 Filter
P74 Anlg In1 Offset
P1404 Analog In1 Value
From digital reference setting
P295 Anlg In1 Target
P70 Anlg In1 Sel
Window comparator
P1043 Anlg In1 Cmp Err
P1042 Anlg In1 Cmp
P1045 Anlg In1 Cmp Eq
P1044 Anlg In1 Cmp Dly
Analog In 2
Ref_2+
Ref_2-
P76 Anlg In2 Config
P78 Anlg2 Tune Scale
P260 Anlg In2 Tune
P77 Anlg In2 Scale
P79 Anlg In2 Offset
P1405 Analog In2 Value
P801 Anlg In2 Filter
P296 Anlg In2 Target
P75 Anlg In2 Sel
Analog In 3
Ref_3+
Ref_3-
P81 Anlg In3 Config
P83 Anlg3 Tune Scale
P261 Anlg In3 Tune
P82 Anlg In3 Scale
P84 Anlg In3 Offset
P1406 Analog In3 Value
P802 Anlg In3 Filter
P297 Anlg In3 Target
P80 Anlg In3 Sel
Analog Outputs
Terminal Block 3
P66 Anlg Out1 Sel
P62 Anlg Out1 Scale
AO1
ACOM
P67 Anlg Out2 Sel
P63 Anlg Out2 Scale
AO2
Expansion Analog Outputs (Optional)
P68 Anlg Out3 Sel
P64 Anlg Out3 Scale
AO3
P69 Anlg Out4 Sel
P65 Anlg Out4 Scale
AO4

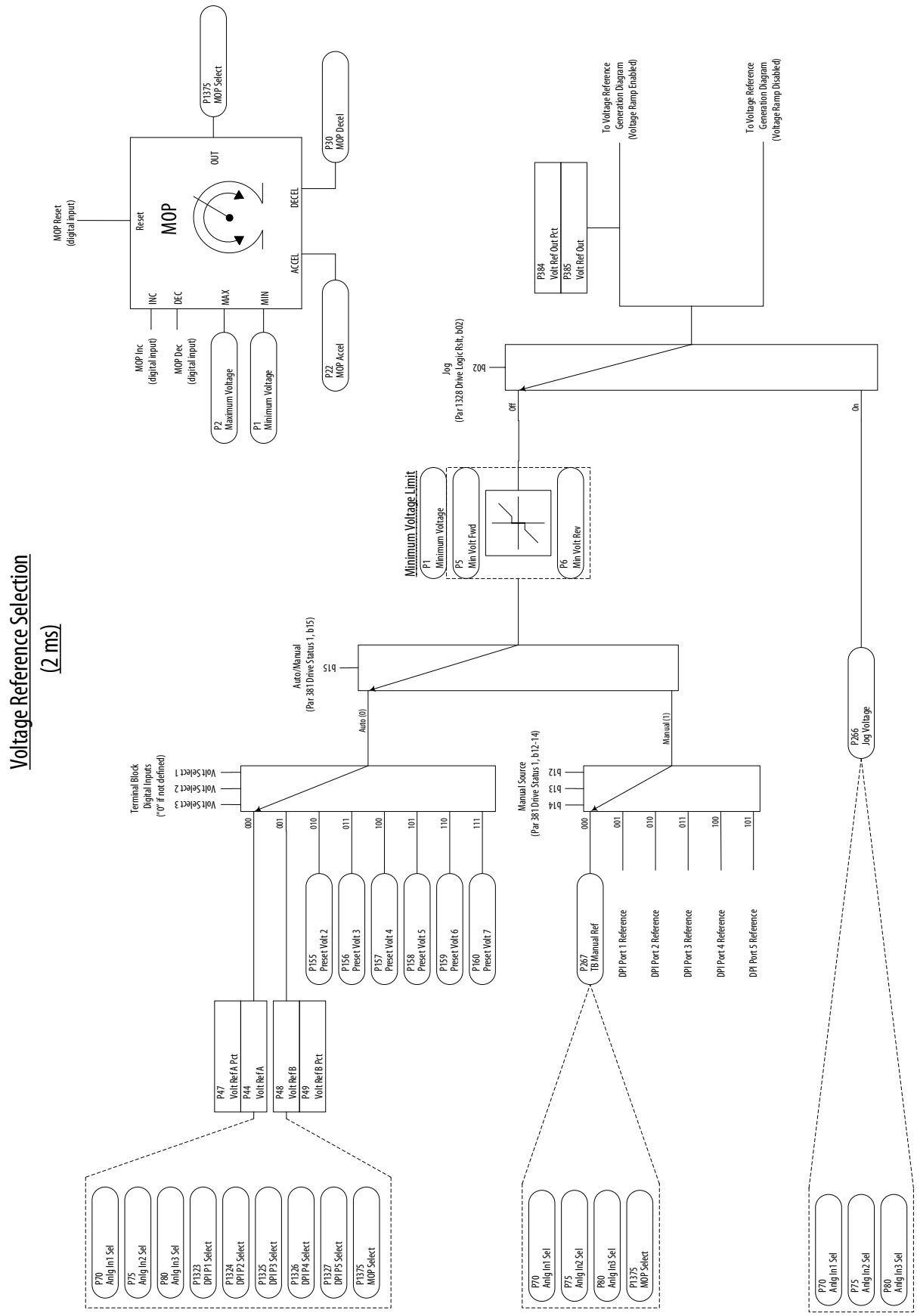
Voltage Reference Selection
(2 ms)
MOP Reset
(digital input)
Reset
MOP
OUT
INC
DEC
MAX
MIN
ACCEL
DECEL
P1375
MOP Select
P30
MOP Decel
P22
MOP Accel
MOP Inc
(digital input)
MOP Dec
(digital input)
P2
Maximum Voltage
P1
Minimum Voltage
P384
Volt Ref Out Pct
P385
Volt Ref Out
To Voltage Reference
Generation Diagram
(Voltage Ramp Enabled)
To Voltage Reference
Generation Diagram
(Voltage Ramp Disabled)
Jog
(Par 1328 Drive Logic Rslt, b02)
b02
Off
On
Minimum Voltage Limit
P1
Minimum Voltage
P5
Min Volt Fwd
P6
Min Volt Rev
Auto/Manual
(Par 381 Drive Status 1, b15)
b15
Auto (0)
Manual (1)
P266
Jog Voltage
Terminal Block
Digital Inputs
("0" if not defined)
Volt Select 1
Volt Select 2
Volt Select 3
000
001
010
011
100
101
110
111
P155
Preset Volt 2
P156
Preset Volt 3
P157
Preset Volt 4
P158
Preset Volt 5
P159
Preset Volt 6
P160
Preset Volt 7
Manual Source
(Par 381 Drive Status 1, b12-14)
b12
b13
b14
000
001
010
011
100
101
P267
TB Manual Ref
DPI Port 1 Reference
DPI Port 2 Reference
DPI Port 3 Reference
DPI Port 4 Reference
DPI Port 5 Reference
P47
Volt Ref A Pct
P44
Volt Ref A
P48
Volt Ref B
P49
Volt Ref B Pct
P70
Anlg In1 Sel
P75
Anlg In2 Sel
P80
Anlg In3 Sel
P1323
DPI P1 Select
P1324
DPI P2 Select
P1325
DPI P3 Select
P1326
DPI P4 Select
P1327
DPI P5 Select
P1375
MOP Select
P70
Anlg In1 Sel
P75
Anlg In2 Sel
P80
Anlg In3 Sel
P1375
MOP Select
P70
Anlg In1 Sel
P75
Anlg In2 Sel
P80
Anlg In3 Sel

Voltage Reference Generation (2ms)

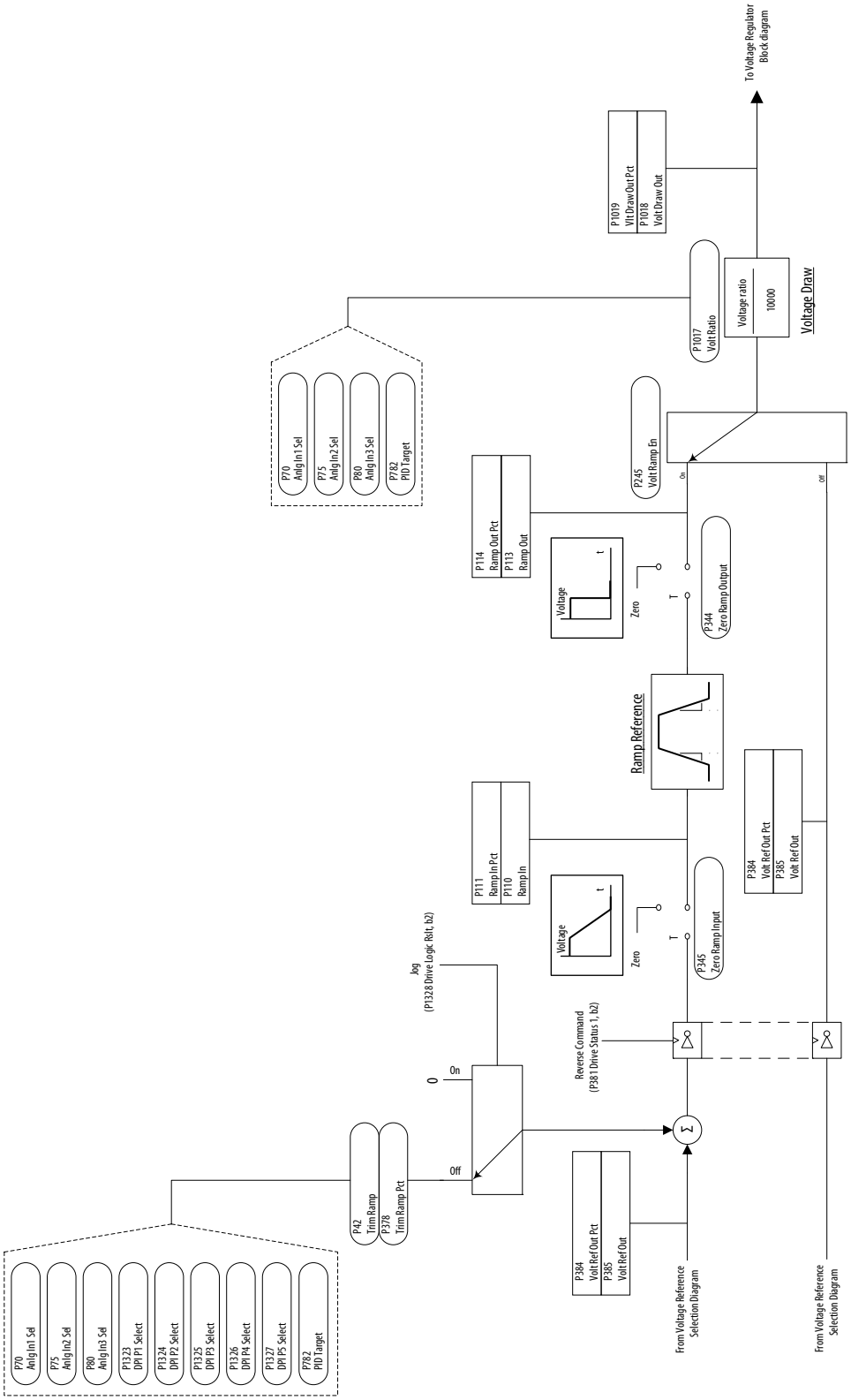

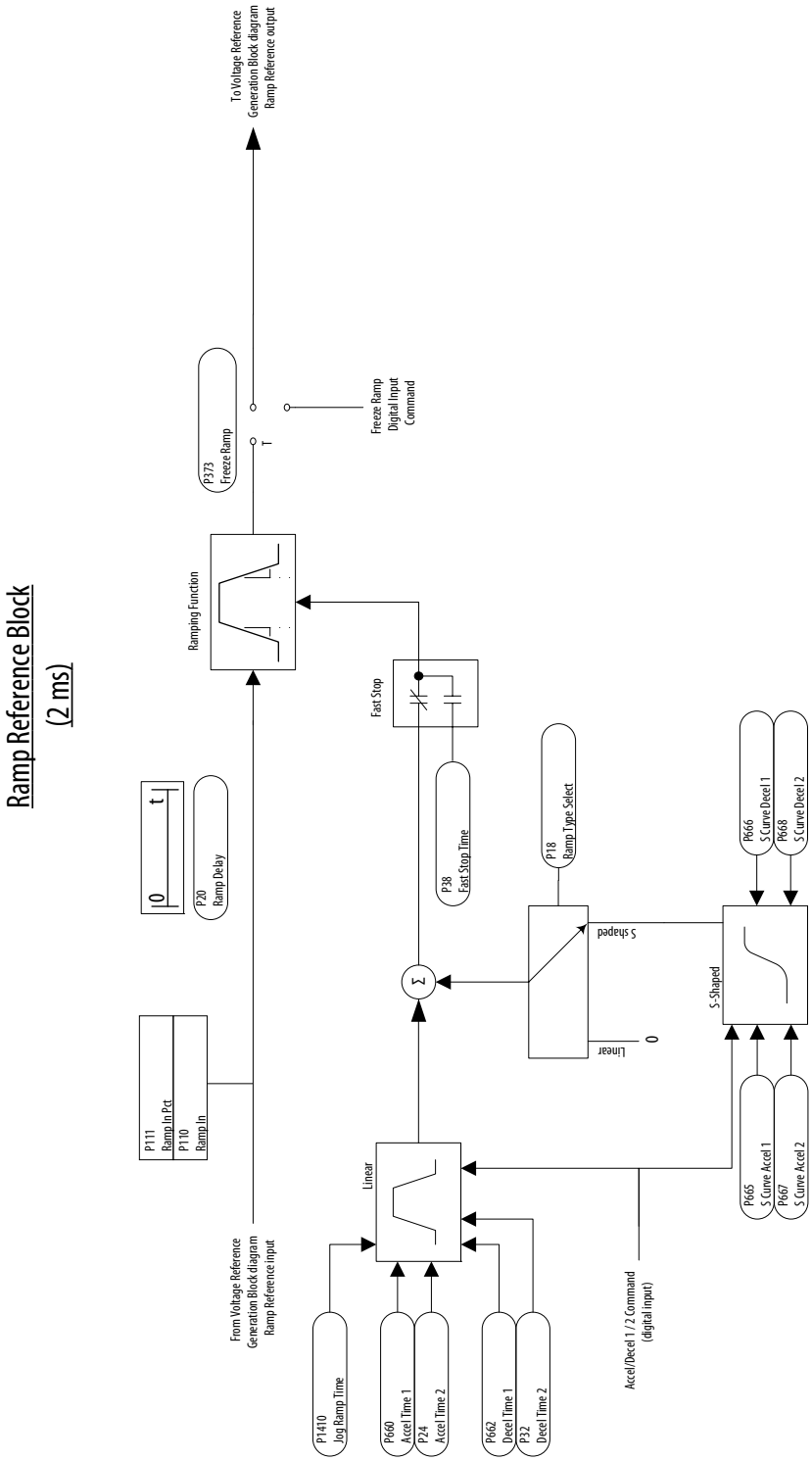
Ramp Reference Block
(2 ms)
To Voltage Reference Generation Block diagram Ramp Reference output
P373 Freeze Ramp
T
Freeze Ramp Digital Input Command
Ramping Function
Fast Stop
P20 Ramp Delay
0
t
P38 Fast Stop Time
P18 Ramp Type Select
P666 S Curve Decel 1
P668 S Curve Decel 2
S shaped
Σ
S-Shaped
Linear
0
P111 Ramp In Pct
P110 Ramp In
Linear
P665 S Curve Accel 1
P667 S Curve Accel 2
From Voltage Reference Generation Block diagram Ramp Reference input
P1410 Jog Ramp Time
P660 Accel Time 1
P24 Accel Time 2
P662 Decel Time 1
P32 Decel Time 2
Accel/Decel 1 / 2 Command (digital input)

Current Mode Selection
(2 ms)

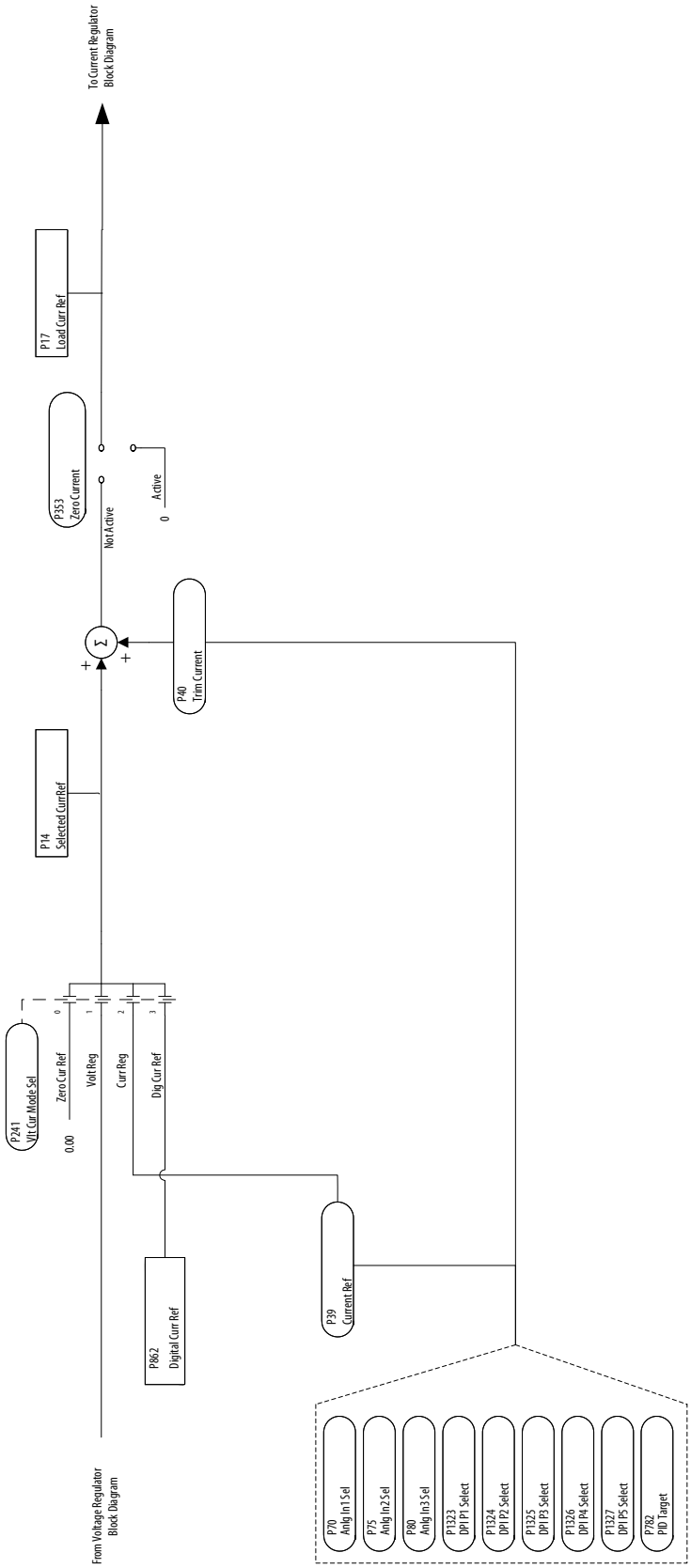

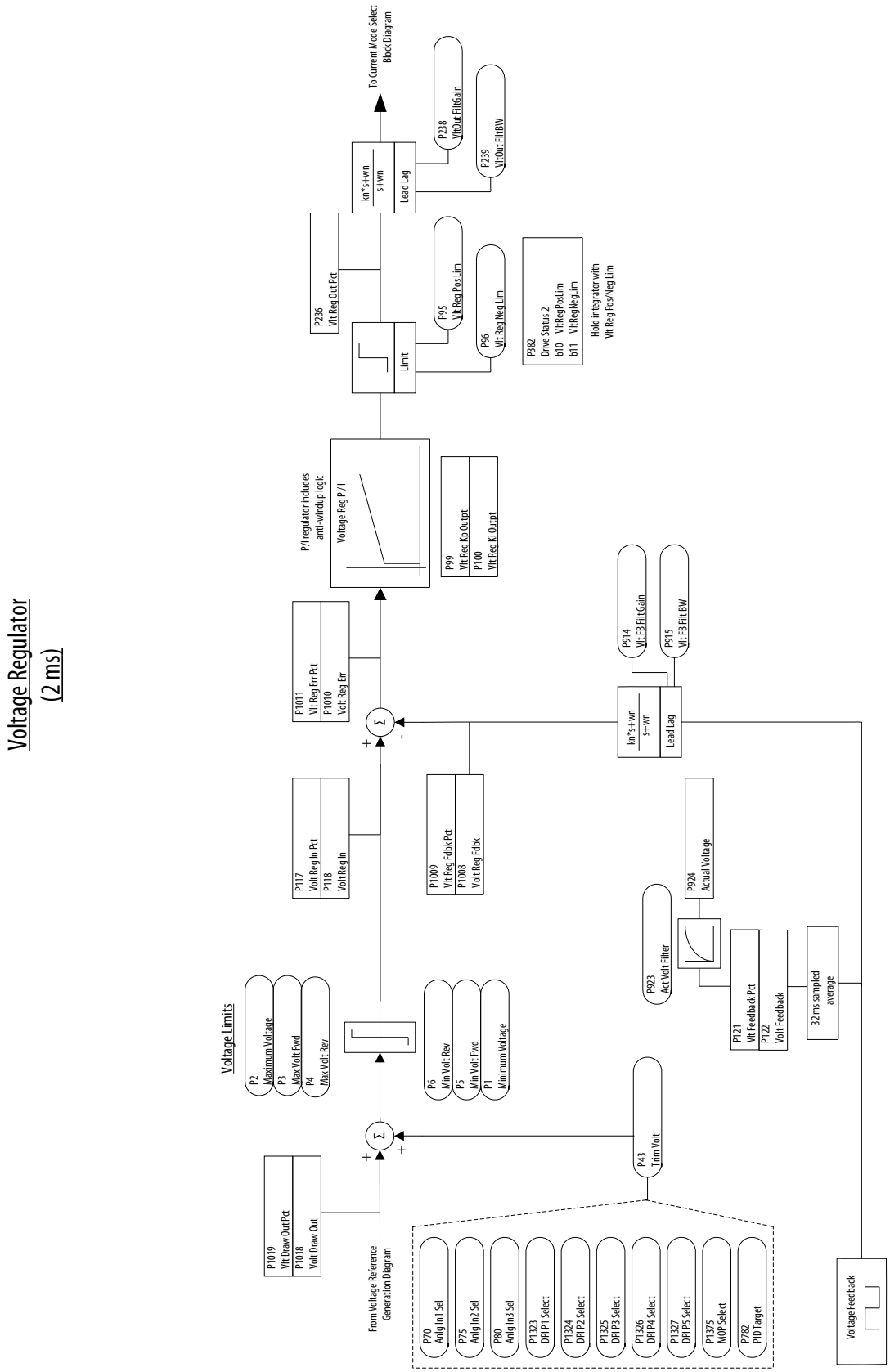
Voltage Regulator
(2 ms)
Voltage Limits
P2
Maximum Voltage
P3
Max Volt Fwd
P4
Max Volt Rev
P6
Min Volt Rev
P5
Min Volt Fwd
P1
Minimum Voltage
P1019
Vlt Draw Out Pct
P1018
Volt Draw Out
From Voltage Reference
Generation Diagram
P117
Volt Reg In Pct
P118
Volt Reg In
P1009
Vlt Reg Fdbk Pct
P1008
Volt Reg Fdbk
P1011
Vlt Reg Err Pct
P1010
Volt Reg Err
P43
Trim Volt
P923
Act Volt Filter
P924
Actual Voltage
P121
Vlt Feedback Pct
P122
Volt Feedback
32 ms sampled
average
P914
Vlt FB Filt Gain
P915
Vlt FB Filt BW
kn*s+wn
s+wn
Lead Lag
P70
Anlg In1 Sel
P75
Anlg In2 Sel
P80
Anlg In3 Sel
P1323
DPI P1 Select
P1324
DPI P2 Select
P1325
DPI P3 Select
P1326
DPI P4 Select
P1327
DPI P5 Select
P1375
MOP Select
P782
PID Target
Voltage Feedback
P/I regulator includes
anti-windup logic
Voltage Reg P / I
P99
Vlt Reg Kp Outpt
P100
Vlt Reg Ki Outpt
Limit
P95
Vlt Reg Pos Lim
P96
Vlt Reg Neg Lim
P236
Vlt Reg Out Pct
P382
Drive Status 2
b10 VltRegPosLim
b11 VltRegNegLim
Hold integrator with
Vlt Reg Pos/Neg Lim
P238
VltOut FiltGain
P239
VltOut FiltBW
To Current Mode Select
Block Diagram

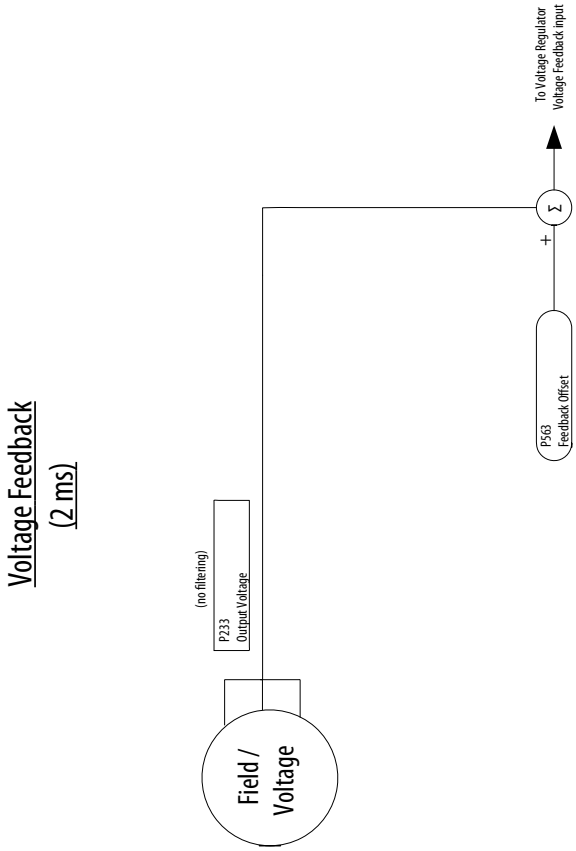
Voltage Feedback
(2 ms)
Field /
Voltage
(no filtering)
P233
Output Voltage
+
Σ
P563
Feedback Offset
To Voltage Regulator
Voltage Feedback input

Voltage Regulator PI Block (2 ms)

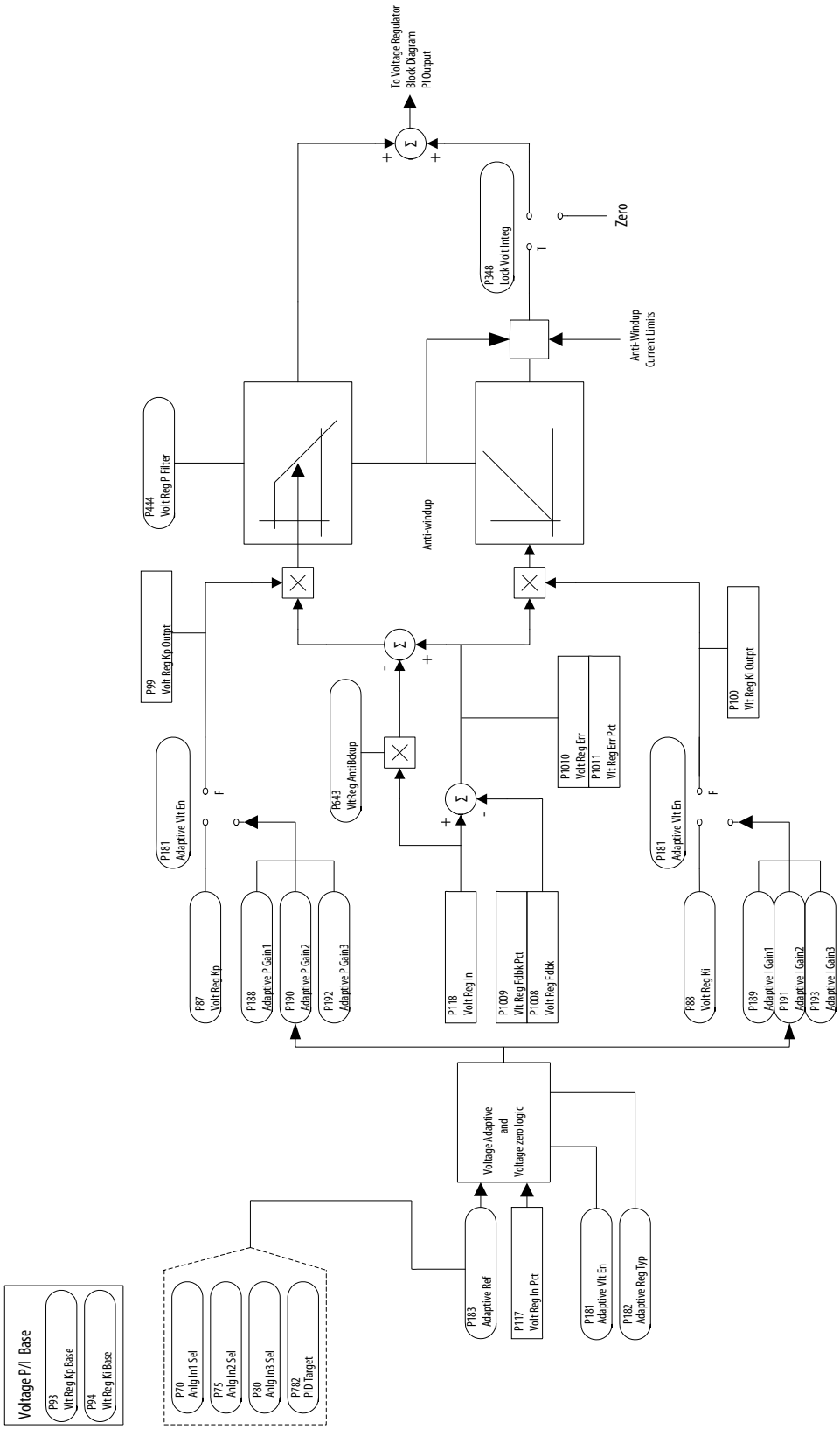

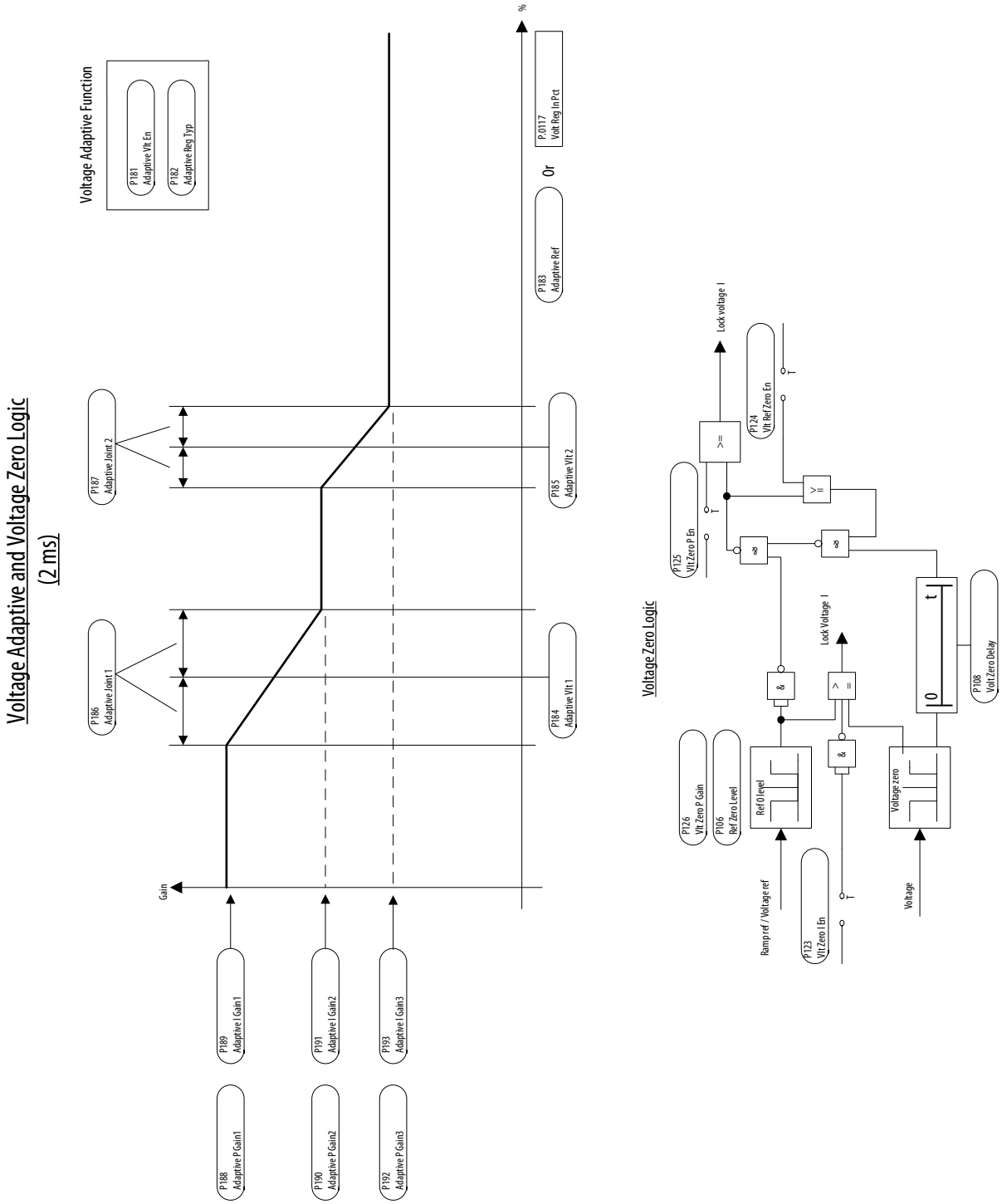
Voltage Adaptive and Voltage Zero Logic
(2 ms)
Voltage Adaptive Function
P181 Adaptive Vlt En
P182 Adaptive Reg Typ
P187 Adaptive Joint 2
P186 Adaptive Joint 1
Gain
%
P183 Adaptive Ref
Or
P 0117 Volt Reg In Pct
P185 Adaptive Vlt 2
P184 Adaptive Vlt 1
P189 Adaptive I Gain1
P191 Adaptive I Gain2
P193 Adaptive I Gain3
P188 Adaptive P Gain1
P190 Adaptive P Gain2
P192 Adaptive P Gain3
Voltage Zero Logic
Lock voltage I
P124 Vlt Ref Zero En
P125 Vlt Zero P En
Lock Voltage I
P126 Vlt Zero P Gain
P106 Ref Zero Level
Ref 0 Level
Voltage zero
P108 Volt Zero Delay
Ramp ref / Voltage ref
P123 Vlt Zero I En
Voltage

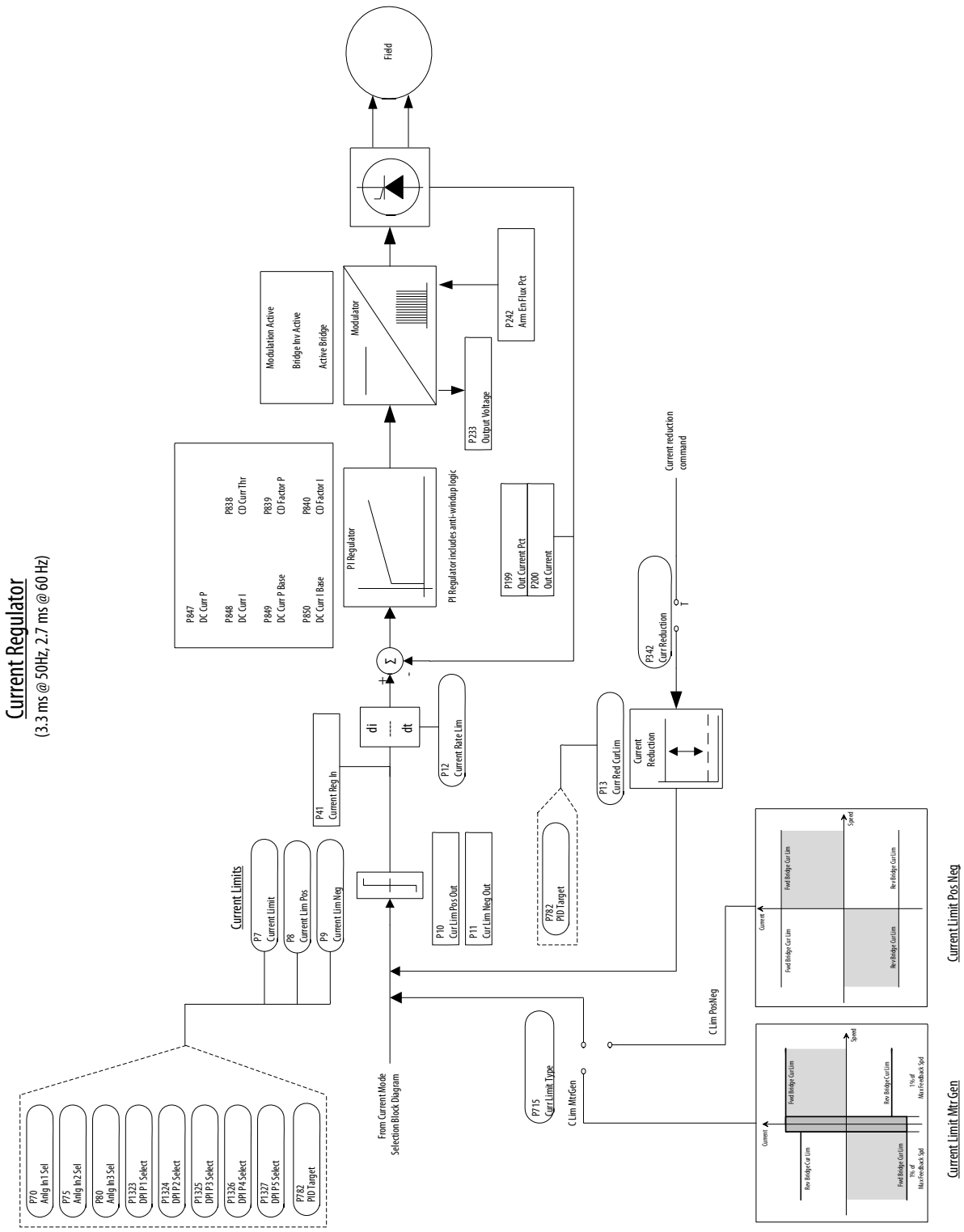
Current Regulator
(3.3 ms @ 50Hz, 2.7 ms @ 60 Hz)
Field
Modulation Active
Bridge Inv Active
Active Bridge
Modulator
P242
Arm Fin Flux Pct
P233
Output Voltage
P847
DC Curr P
P848
DC Curr I
P849
DC Curr P Base
P850
DC Curr I Base
P838
CD Curr Thr
P839
CD Factor P
P840
CD Factor I
PI Regulator
PI Regulator includes anti-windup logic
P199
Out Current Pct
P200
Out Current
Current reduction command
P342
Curr Reduction
Σ
di
dt
P12
Current Rate Lim
P41
Current Reg In
P13
Curr Red Cur Lim
Current Reduction
Current Limits
P7
Current Limit
P8
Current Lim Pos
P9
Current Lim Neg
P10
Cur Lim Pos Out
P11
Cur Lim Neg Out
P782
PID Target
C Lim PosNeg
P715
Curr Limit Type
C Lim MtrGen
From Current Mode
Selection Block Diagram
P70
Anlg In1 Sel
P75
Anlg In2 Sel
P80
Anlg In3 Sel
P1323
DPI P1 Select
P1324
DPI P2 Select
P1325
DPI P3 Select
P1326
DPI P4 Select
P1327
DPI P5 Select
P782
PID Target
Current
Speed
Fwd Bridge Cur Lim
Rev Bridge Cur Lim
Rev Bridge Cur Lim
Fwd Bridge Cur Lim
1% of
Max Feedback Spd
Current Limit Pos Neg
Current Limit Mtr Gen

Voltage Threshold / Voltage Control (2 ms)

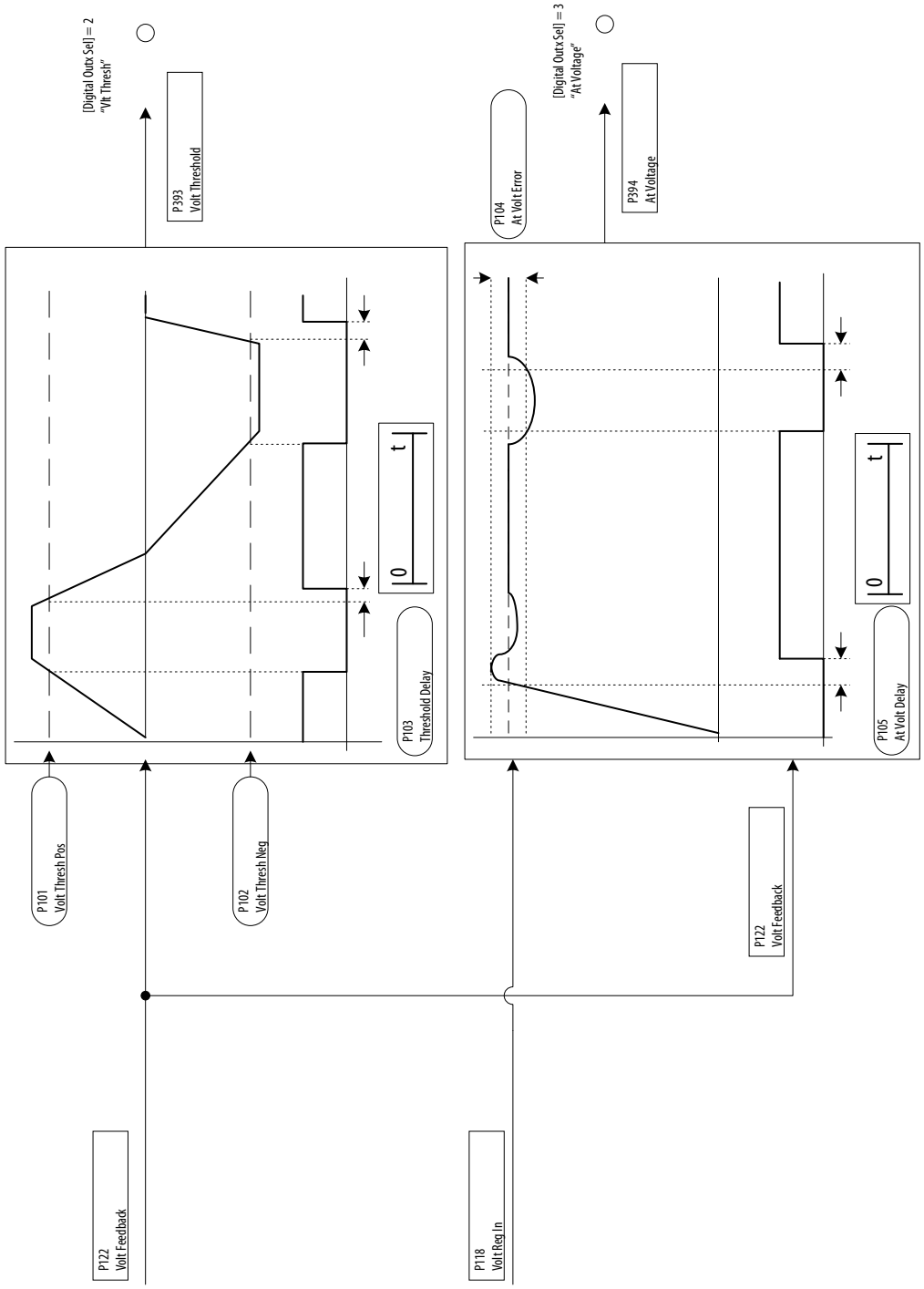

Scale Blocks
(background)

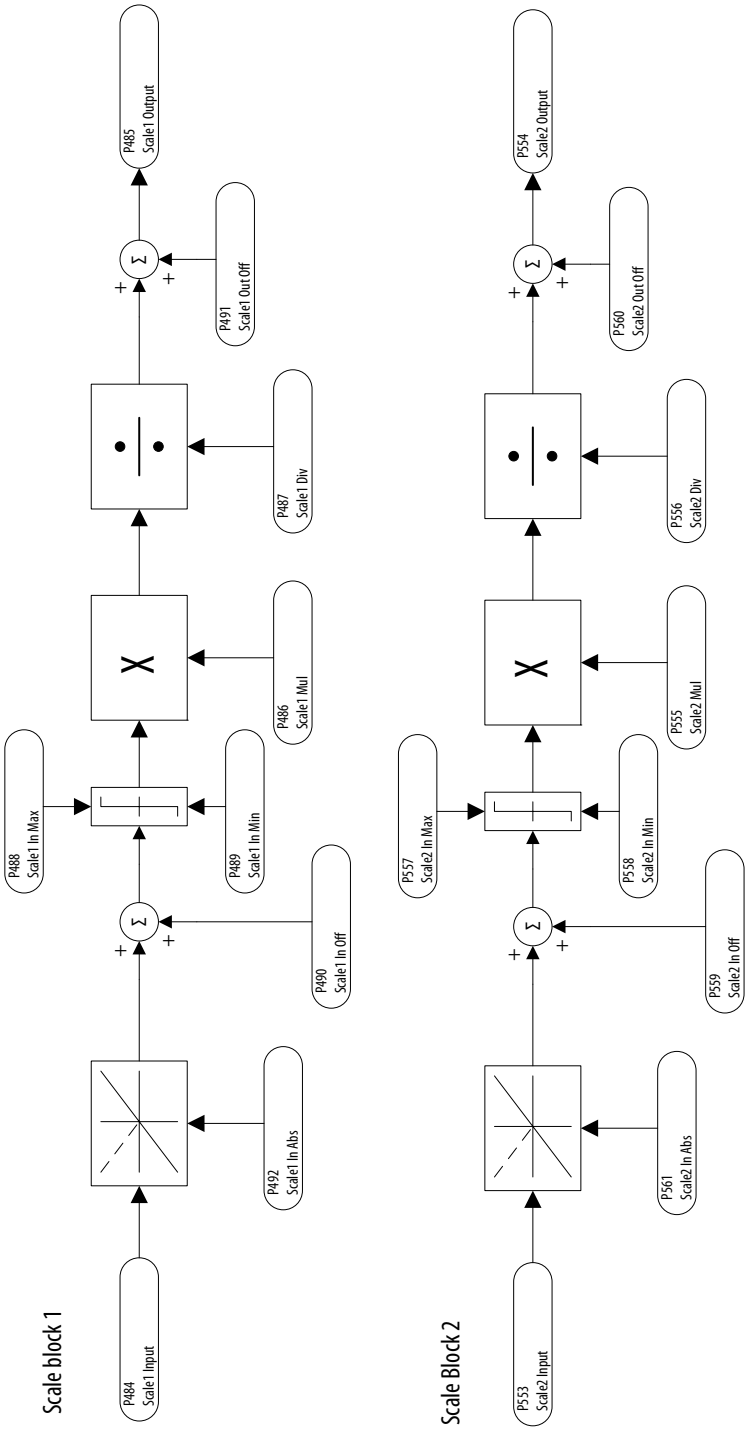

Note: Up to six scale blocks are available. Scale Blocks 3...6 follow the same flow as blocks 1 and 2, shown here.

User Defined Parameters

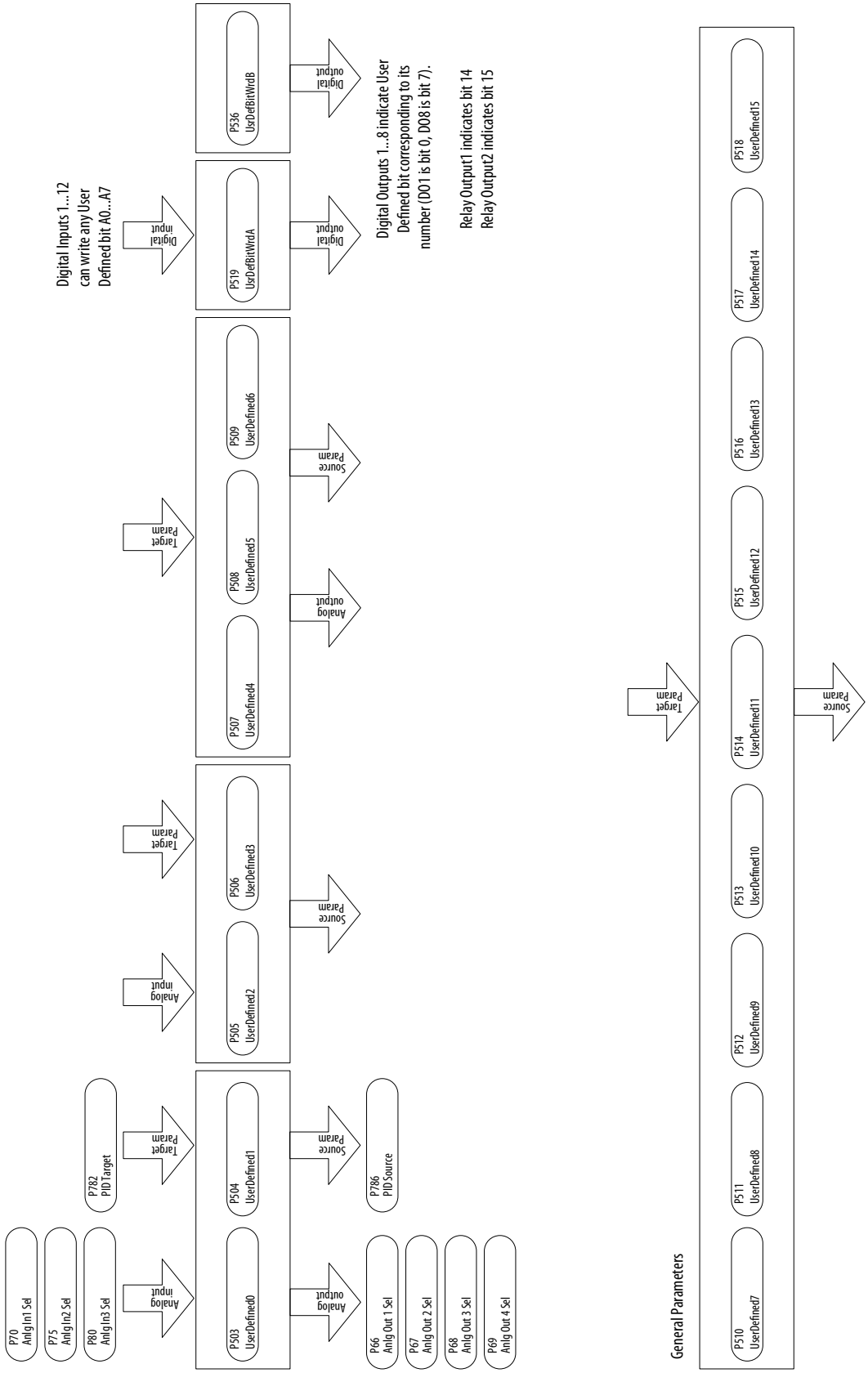

Unit Scaling

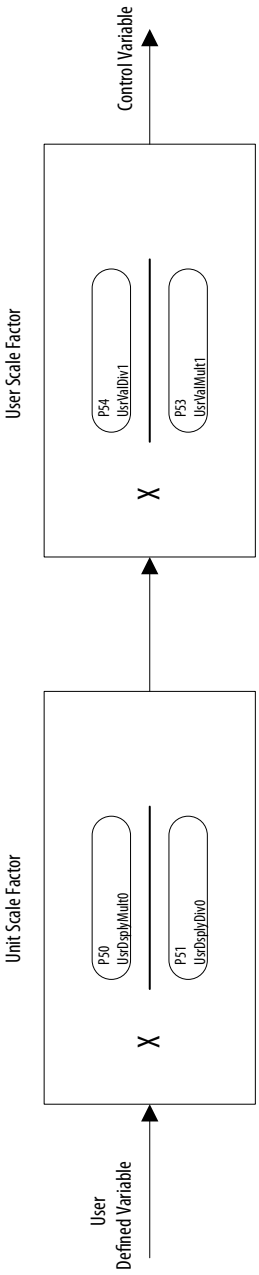

Test Generator

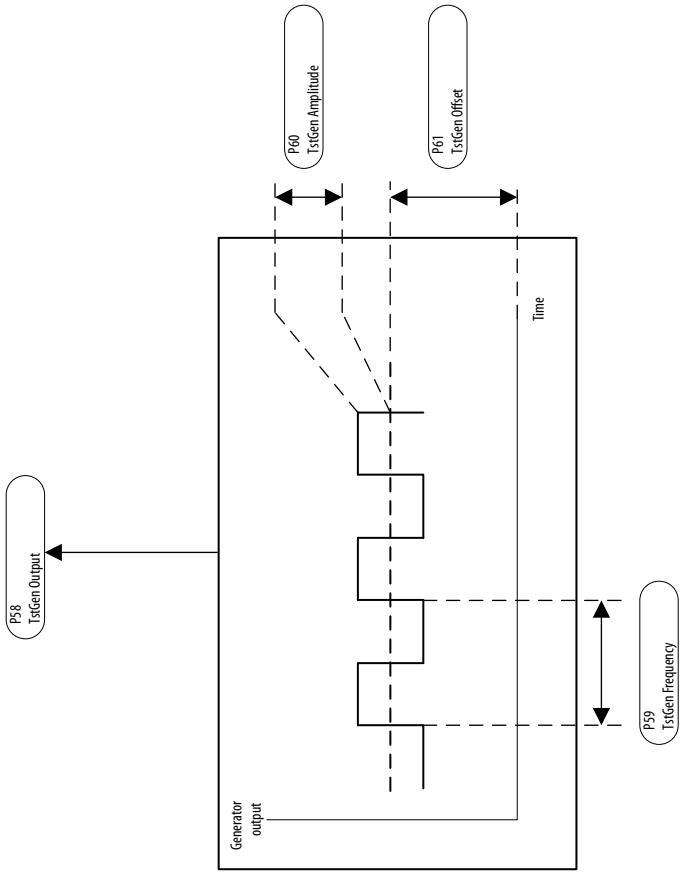

Voltage Reference Selection Settings

P402 Vlt Select 2	P401 Vlt Select 1	P400 Vlt Select 0	Reference
0	0	0	P44 Volt Ref A
0	0	1	P48 Volt Ref B
0	1	0	P155 Preset Volt 2
0	1	1	P156 Preset Volt 3
1	0	0	P157 Preset Volt 4
1	0	1	P158 Preset Volt 5
1	1	0	P159 Preset Volt 6
1	1	1	P160 Preset Volt 7

Fault/Alarm Mapping

"Auxiliary Input" (F2)

P354
Aux Inp Flt Cfg

1 = "Alarm"
2 = "Fault"
3 = "Fast Stop"
4 = "Normal Stop"
5 = "CurrLim Stop"

"Motor Over Temp" (F16)

P365
OverTemp Flt Cfg

0 = "Ignore"
1 = "Alarm"
2 = "Fault"
3 = "Fast Stop"
4 = "Normal Stop"
5 = "CurrLim Stop"

HIM Overview

This section contains information on the Human Interface Module (HIM) elements and use for the 20-HIM-A3 and 20-HIM-A5 and the 20-HIM-C3S and 20-HIM-C5S HIMs.

For details on the 20-HIM-A6 and 20-HIM-C6S, see the PowerFlex 20-HIM-A6 and 20-HIM-C6S HIM User Manual, publication 20HIM-UM001.

External and Internal Connections

The PowerFlex DC field controller provides a number of cable connection points for the HIM (frame A shown).

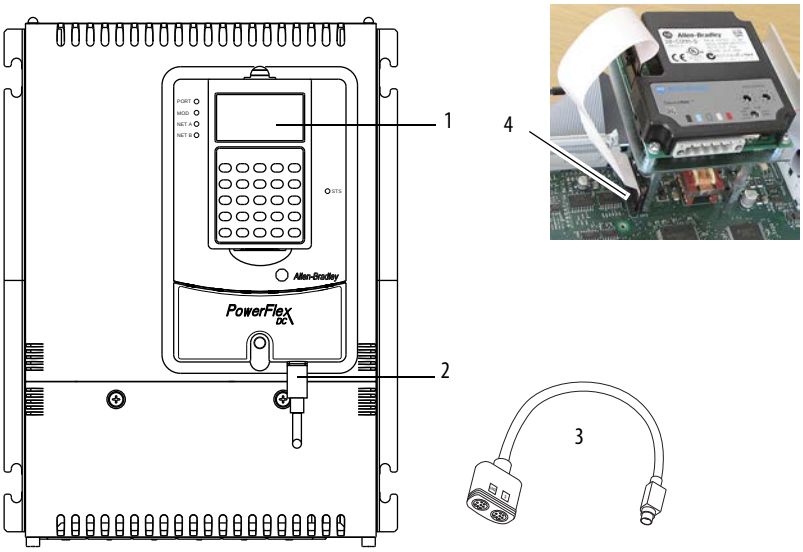

No.	Connector	Description
1	DPI Port 1	HIM connection when installed in cover.
2	DPI Port 2	DPI cable connection for hand held and remote options.
3	DPI Port 3 or 2	Splitter cable that is connected to DPI Port 2 provides additional port.
4	DPI Port 5	Cable connection for communication adapter (shown with front cover removed).

LCD Display Elements

The LCD display contains these elements.

Display	Description
Fwd | Stopped | | Auto | 0.0 volts Main Menu: Diagnostics Parameter Device Select	Direction | Drive Status | Alarm(1) | Auto/Man | Information Commanded or Output Voltage or Current Programming / Monitoring / Troubleshooting

(1) Displays the icon when an alarm is present.

The top line of the HIM display can be configured with parameter 1321 [DPI Fdbk Select].

ALT Functions

To use an ALT function, press the ALT key, release it, then press the programming key that is associated with the function printed on the HIM above the key:

Table 15 - Alt Key Functions

Press the ALT Key	and then press…	Performs this function …
ALT	S.M.A.R.T. Esc	Displays the S.M.A.R.T. list screen. See Using the S.M.A.R.T. List Screen on page 125 for more information.
	View Sel	Lets you select how parameters are viewed or provides detailed information about a parameter or component.
	Lang ▲	Displays the language selection screen.
	Auto / Man ▼	Switches between Auto and Manual Modes.
	Remove ↵	Allows HIM removal without causing a fault if the HIM is not the last controlling device and does not have Manual control of the field controller.
	Exp .	Allows value to be entered as an exponent (Not available on the PowerFlex DC Field Controller).
	Param # +/–	Allows entry of a parameter number for viewing/editing.

Using the S.M.A.R.T. List Screen

The LCD HIM provides the S.M.A.R.T. list screen, which contains some of the most commonly changed parameters, including these:

Parameter Name / Number	Description
[Load Rated Volt] (175)	Maximum output voltage of the field controller.
[Load Rated Curr] (179)	Load rated current.
[Anlg In1 Sel] (70)	Selects the parameter to which a value is written from analog input 1 (default = "Volt Ref A")
[Maximum Volt] (2)	Defines the maximum voltage of the field controller.
[Current Limit] (7)	Symmetrical current limit for both current directions, expressed as a percentage of the value in parameter 179 [Load Rated Curr].
[Accel Time 1] (660)	Sets the rate of acceleration for linear ramp 1.

Some important Start Up parameters are not included in this screen. See Startup on page 9 for detailed instructions.

Menu Structure

Figure 3 - HIM Menu Structure

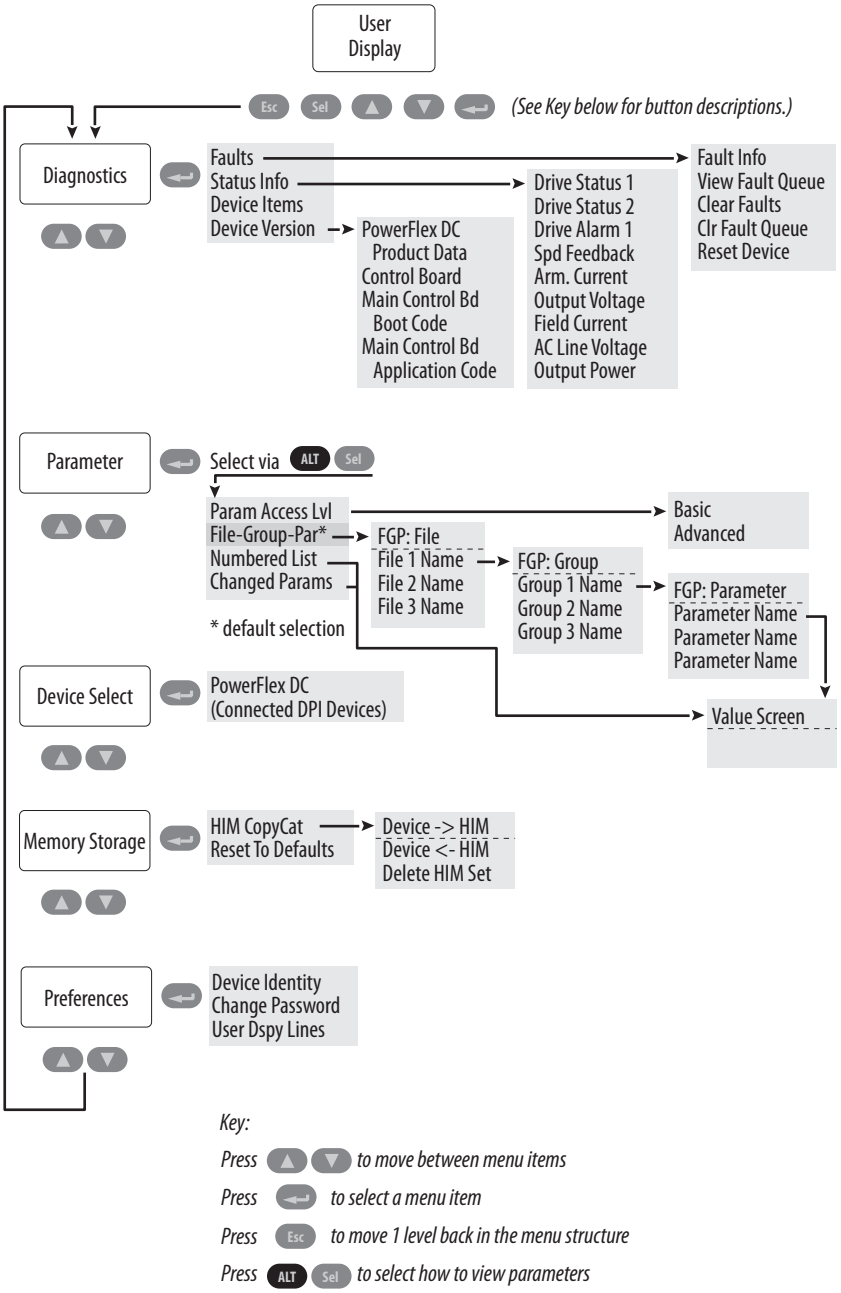

Diagnostics Menu

When a fault trips the device, use this menu to access detailed data about the field controller.

Option	Description
Faults	View fault queue or fault information, clear faults, or reset device.
Status Info	View parameters that display status information about the device.
Device Items	View statistics that are associated with DPI communication.
Device Version	View the firmware version and hardware series of components.

Parameter Menu

Use this menu to view and edit parameters for the device. When you enter the Parameter menu, by default the File–Group–Parameter view is displayed. To access other views for the Parameter menu, with "Parameter" highlighted in the Main menu, press Alt then Sel (View), select the desired view in the list and press Enter. The following selections are available:

Option	Description
Param Access Lvl	Displays parameter 211 [Param Access Level]. The device is initially set to the Basic Parameter view. To view all parameters, set parameter 211 [Param Access Lvl] to option 1 "Advanced".
File-Group-Par	Displays all parameters in a File - Group - Parameter (FGP) structure. The FGP structure simplifies programming by grouping parameters that are used for similar functions.
Numbered List	Displays all parameters in numerical order.
Changed Params	Displays the most recently changed parameter. You can scroll through the list of all changed parameters to the least recently changed. The new and default values are listed for each parameter.

See Viewing and Editing Parameters on page 128 for more information.

Device Select Menu

Use this menu to access parameters in connected peripheral devices.

Memory Storage Menu

Device data can be saved to, or recalled from, 'HIM sets.' HIM sets are files that are stored in permanent nonvolatile HIM memory.

ATTENTION: It is recommended that you stop the field controller before performing a download to the device by using the HIM CopyCat function, DriveExecutive™, or Connected Components Workbench™ software.

Option	Description
HIM CopyCat	
Device -> HIM	Save data to a HIM set.
Device <- HIM	Load data from a HIM set to active device memory.
Delete HIM Set	Delete a HIM set.
Reset To Defaults	Restore the device to its factory default settings.

Preferences Menu

The HIM and field controller have features that you can customize.

Option	Description
Drive Identity	Add text to identify the device.
User Dspy Lines	Select the display, parameter, scale, and text for the User Display. The User Display is two lines of user-defined data that appears when the HIM is not being used for programming.

Viewing and Editing Parameters

View a Parameter Value

Follow theses steps to view a parameter value on the HIM.

1. In the Main Menu, press ▲ or ▼ to scroll to 'Parameter.'
2. Press ↵.

   'FGP File' appears on the top line and the first three files appear below it.

   ```
   FGP: File
   Monitor
   Load Control
   Volt Command
   ```

3. To scroll through the files, press ▲ or ▼.
4. To select a file, press ↵.

   The groups are displayed for the selected file.

   ```
   FGP: Group
   Load Data
   Current Reg
   Curr Attributes
   ```

5. Repeat steps 3 and 4 to select a group and then a parameter.

   ```
   FGP: Parameter
   CD Curr Thr
   CD Factor P
   CD Factor I
   ```

   The parameter value screen appears.

   ```
   FGP:                    Par 839
   CD Factor P
                 0.3
   ```

Edit a Parameter Value

Follow theses steps to edit a parameter value from the HIM.

1. To select the parameter you want to edit, follow the steps in View a Parameter Value on page 128.
2. With the parameter selected, press ↵.

   FGP: Par 839
   CD Factor P
   0.3

3. Press the ▲ or ▼ change the value.

   If desired, press Sel to move from digit to digit, letter to letter, or bit to bit. The digit or bit that you can change is highlighted.

   FGP: Par 839
   CD Factor P
   0.4

4. To save the value, press ↵.
   If you want to cancel a change, press Esc.
5. To scroll through the parameters in the group, press ▲ or ▼,

   Or press Esc to return to the group list.

Numeric Keypad Shortcut

On a HIM with a numeric keypad, press ALT and +/– to access the parameter by typing its number.

Remove/Install the HIM

The HIM can be removed or installed while the field controller is powered.

IMPORTANT HIM removal is only permissible in Auto mode. If the HIM is removed while in Manual mode or the HIM is the only remaining control device, a fault occurs.

To remove the HIM, follow these steps.

1. Press ALT and then ↵ (Remove).

   The 'Remove HIM' confirmation screen appears.

   ```
   Remove Op Intrfc:
   Press Enter to
   Disconnect Op Intrfc?
   (Port 1 Control)
   ```

2. To confirm that you want to remove the HIM, press ↵.
3. Remove the HIM from the cradle on the field controller.

To install the HIM, insert it into the cradle on the field controller or connect the DPI cable.

Application Notes

Alpha Test Mode

The Alpha Test is a diagnostic function that allows you to activate the output power module in an open loop mode. By commanding an SCR firing angle, a voltage is produced at the output of the selected power module. The SCR firing angle is specified in parameter 167 [Test Angle]. A load greater than 500 mA is required for proper SCR operation - typically, an incandescent bulb or inductive load is used.

The Alpha Test is started as soon as parameter 166 [Alpha Test] is set to one of the following values:

- 1 “Fwd” (output forward)
- 2 “Rev” (output reverse)

The HIM displays “AlphaTest” while active. Start and Jog commands have no affect when the test mode is initiated.

The Alpha Test ends when Par 166 [Alpha Test] is set to 0 “Off”. Otherwise, only a digital input Enable or a Fault stops the test - a HIM Stop has no affect. A change to the Alpha Test Mode (set in Par 166 [Alpha Test]) resets the test angle to the minimum firing value (180 deg). Though higher angles provide less current, 180 degrees will be the maximum firing angle, not the minimum.

Overcurrent and Overvoltage fault protections are active during these tests. Also, the Autotune function is disabled while Alpha test is enabled.

Alpha Test Setup and Operation

ATTENTION: Only qualified electrical personnel familiar with the construction and operation of this equipment and the hazards that are involved should perform this test. Failure to observe this precaution could result in equipment damage and/or bodily injury.

WARNING: Remove power before you make or break cable connections. When you remove or insert a cable connector with power applied, an electrical arc may occur. An electrical arc may cause these system events, which can cause personal injury or property damage.

- An erroneous signal to system field devices, which can cause unintended machine motion
- An explosion in a hazardous environment

Electrical arcing causes excessive wear to contacts on both the module and its mating connector. Worn contacts can create electrical resistance.

IMPORTANT The Alpha Test requires that you attach the leads of an isolated oscilloscope to the output terminals of the field controller.

1. Remove and lock-out all incoming power to all field controller.

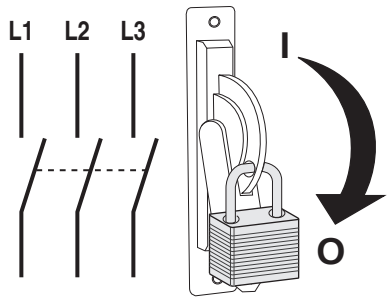

2. Disconnect the output power leads.
3. Attach the isolated oscilloscope leads to terminals C and D.
4. Reapply power to the field controller.
5. Verify that there are no alarms or faults present. If an alarm or fault code displays, see Troubleshooting on page 89.
6. Open the Enable input on the field controller.
7. Set Par 166 [Alpha Test] to the desired value (1 = “Fwd” or 2 = “Rev”).
8. Close the Enable input.
9. Slowly decrease the value of parameter 167 [Test Angle] until a steady pattern of voltage pulses display on the oscilloscope. The resulting patterns indicate the status of the thyristors.

- Six pulses per AC line cycle indicate that all thyristors in the selected bridge are operating properly.
- Fewer than six pulses per AC line cycle indicates that one or more thyristors for the selected bridge are not operating.

Conduction (or output voltage) does not typically begin until the angle is below approximately 120°.

10. Open the Enable input and set Par 166 [Alpha Test] to 0 "Off".
11. Remove power from the field controller.
12. Remove the oscilloscope from the leads of the field controller.
13. If necessary, replace the defective firing board in the field controller. See the PowerFlex Digital DC Drive - Frame A Hardware Service Manual, publication 20P-TG001, or PowerFlex Digital DC Drive - Frame B Hardware Service Manual, publication 20P-TG002, for details on replacing the firing board.
14. Reconnect the output power leads to the field controller.
15. Reapply power to the external field.

Analog Input Configuration

The analog inputs default to ±10V. To configure the analog inputs for 0...10V, set parameters [Anlg In*x* Config] to 1, "0-10V". To configure the analog inputs for a current signal, set parameters [Anlg In*x* Config] to 2, "0 - 20mA" or 3, "4 to 20mA". In addition, switches S9, S10, and S11 must be properly configured (see Main Control Circuit Board DIP Switch and Jumper Settings in the PowerFlex DC Field Controller Installation Instructions, publication 23PFC-IN001, for more information).

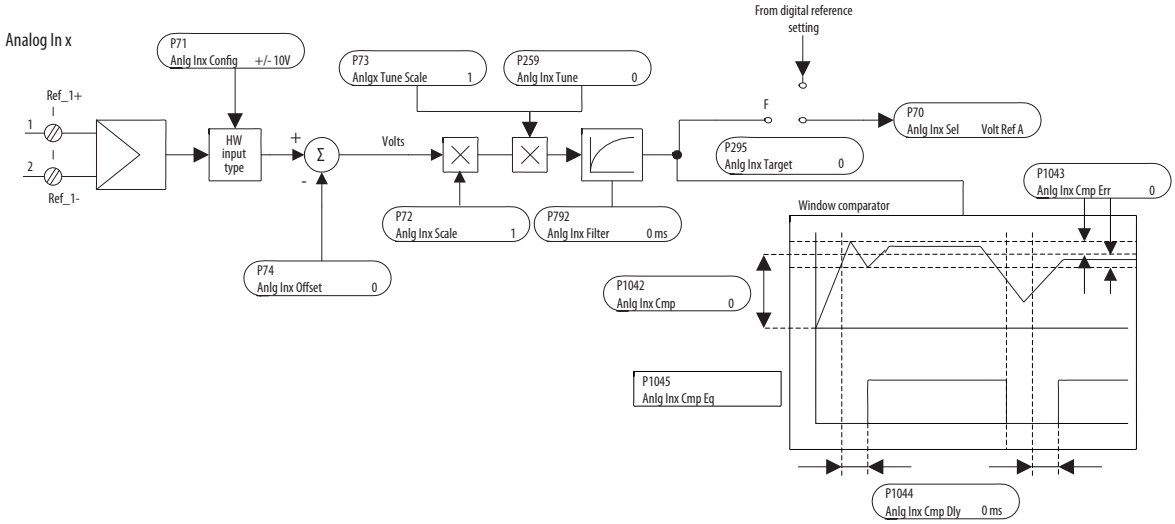

See the Analog Inputs/Outputs Mapping block diagram on page 107 for more information.

Example 1:

The voltage reference value of a field controller is defined with an external voltage of 5V. With this value, the field controller reaches the maximum allowable output voltage set in Par 175 [Load Rated Volt]. Enter a scaling factor of 2 in [Anlg In*x* Scale] to scale the input voltage from 5V to 10V.

Example 2:

An external analog reference reaches a maximum value of 9.8V. Enter a scaling factor of 1.020 in [Anlg In*x* Scale] to scale the maximum voltage from 9.8V to 10V.

The same result could be obtained via parameter [Anlg*x* Tune Scale], by entering the values of the appropriate parameters by using the HIM. The maximum possible analog-input value (in this case 9.8V) must be present at the terminal with a positive polarity at the time of configuration.

Analog-input Signal Comparison

This feature provides an indication via the HIM or a digital output when the signal of analog input 1 has reached a limit above or below a set reference point.

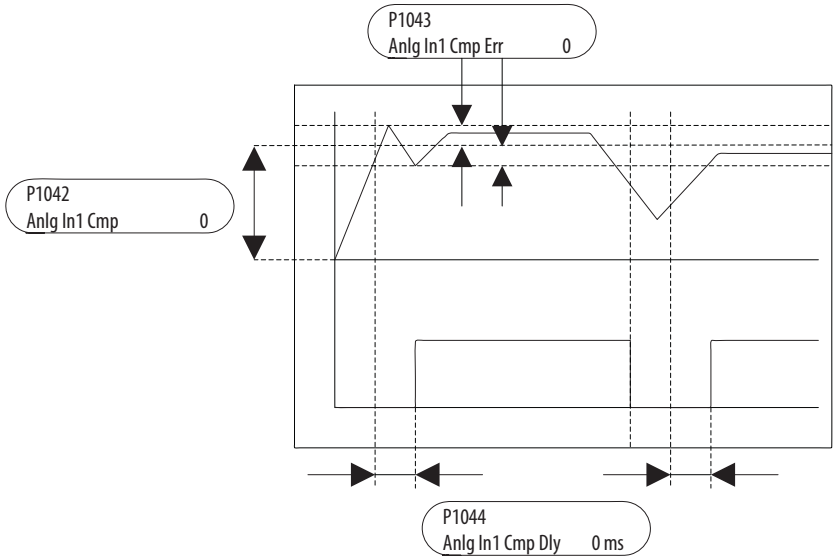

Calculations that are used to determine Pars1042 [Anlg In1 Cmp] and 1043 [Anlg In1 Cmp Err]:

- [Anlg In1 Cmp] = (comparison value) x 10000 / (max. reference value)
- [Anlg In1 Cmp Err] = (tolerance value) x 10000 / (max. reference value)

Example 1:

An application requires an indication via a digital output that the output voltage is within 20V of 200V.

- Par 175 [Load Rated Volt] = 400 V (maximum reference value)
- For Analog Input 1, 10V or 20 mA sets the maximum value of Par 44 [Volt Ref A] = Par 175 [Load Rated Volt]

Configure the following:

- Set Par 70 [Anlg In1 Sel] = "Volt Ref A"
- Set [Digital Out*x* Sel] = "Input1 Cmp" (Par 1045 [Anlg In1 Cmp Eq])
- Set Par 1042 [Anlg In1 Cmp] = 5000 (200 x 10000 / 400)
- Set Par 1043 [Anlg In1 Cmp Err] = 500 (20 x 10000 / 400)
- Par 1045 [Anlg In1 Cmp Eq] = "1" (high) when the signal on Analog Input 1 is within the range that is specified in Par 1043 [Anlg In1 Cmp Err]. Par 1045 [Anlg In1 Cmp Eq] = "0" (low) when the signal on Analog Input 1 is outside the range that is specified in Par 1043 [Anlg In1 Cmp Err].

Example 2:

An application requires an indication via a digital output that the output current is within ±2% of 50% of the maximum current limit.

- Par 7 [Current Limit] = 100% (maximum reference value)
- For Analog Input 1, 10V or 20 mA sets the maximum value = Par 7 [Current Limit]

Configure the following:

- Set Par 70 [Anlg In1 Sel] = "Pos Cur Lim"
- Set [Digital Out*x* Sel] = "Input1 Cmp" (Par 1045 [Anlg In1 Cmp Eq])
- Set Par 1042 [Anlg In1 Cmp] = 5000 (50 x 10000 / 100)
- Set Par 1043 [Anlg In1 Cmp Err] = 200 (2 x 10000 / 100)

Communication Configurations

This section contains a description of the logic command/status words used for communication with a programmable controller.

IMPORTANT If block transfers are programmed to write information continuously to the field controller, care must be taken to format the block transfer properly. If attribute 10 is selected for the block transfer, values are written only to RAM and are not saved in the field controller. This method is the preferred attribute for continuous transfers. If attribute 9 is selected, each program scan completes a write to the field controllers non-volatile memory (EEprom). Because the EEprom has a fixed number of allowed writes, continuous block transfers can quickly damage the EEprom. Do Not assign attribute 9 to continuous block transfers. See the appropriate User Manual for your communication adapter for additional details.

Logic Command/Status Words

See parameter 1328 [Device Logic Rslt] for more information.

Figure 4 - Logic Commend Word

Logic Bits																Command	Description
15	14	13	12	11	10	9	8	7	6	5	4	3	2	1	0		
															x	Stop (1)	0 = Not Stop 1 = Stop
														x		Start (1)(2)	0 = Not Start 1 = Start
													x			Jog	0 = Not Jog 1 = Jog
												x				Clear Faults	0 = Not Clear Faults 1 = Clear Faults
										x	x					Direction	00 = No Command 01 = Forward Command 10 = Reverse Command 11 = Hold Present Direction
									x							Local Control	0 = No Local Control 1 = Local Control
								x								MOP Increment	0 = Not Increment 1 = Increment
						x	x									Accel Rate	00 = No Command 01 = Use Accel Time 1 10 = Use Accel Time 2 11 = Use Present Time
				x	x											Decel Rate	00 = No Command 01 = Use Decel Time 1 10 = Use Decel Time 2 11 = Use Present Time
	x	x	x													Reference Select (3)	000 = No Command 001 = Ref. 1 (Volt Ref A) 010 = Ref. 2 (Volt Ref B) 011 = Ref. 3 (Preset Vlt 3) 100 = Ref. 4 (Preset Vlt 4) 101 = Ref. 5 (Preset Vlt 5) 110 = Ref. 6 (Preset Vlt 6) 111 = Ref. 7 (Preset Vlt 7)
x																MOP Decrement	0 = Not Decrement 1 = Decrement

(1) A "0 = Not Stop" condition (logic 0) must first be present before a "1 = Start" condition starts the field controller. The Start command acts as a momentary Start command. A "1" starts the field controller, but returning to "0" does not stop the device.

(2) This Start does not function when a digital input (parameters 133…144) is programmed for 2-Wire Control (option 5 "Run", 6 "Run Forward" or 7 "Run Reverse").

(3) This Reference Select does not function when a digital input (parameters 133…144) is programmed for "Volt Sel 1, 2 or 3" (option 17, 18 or 19). Note that Reference Selection is "Exclusive Ownership". See Par 604 [Reference Owner] on page 67.

Figure 5 - Logic Status Word

Logic Bits																Status	Description
15	14	13	12	11	10	9	8	7	6	5	4	3	2	1	0		
															x	Ready	0 = Not Ready 1 = Ready
														x		Active	0 = Not Active 1 = Active
													x			Command Direction	0 = Reverse 1 = Forward
												x				Actual Direction	0 = Reverse 1 = Forward
											x					Accel	0 = Not Accelerating 1 = Accelerating
										x						Decel	0 = Not Decelerating 1 = Decelerating
									x							Alarm	0 = No Alarm 1 = Alarm
								x								Fault	0 = No Fault 1 = Fault
							x									At Voltage	0 = Not At Reference 1 = At Reference
				x	x	x										Local Control (1)	000 = Port 0 (TB) 001 = Port 1 010 = Port 2 011 = Port 3 100 = Port 4 101 = Port 5 110 = Reserved 111 = No Local
x	x	x	x													Reference Source	0000 = Vlt Ref A Auto 0001 = Vlt Ref B Auto 0010 = Preset Vlt 2 Auto 0011 = Preset Vlt 3 Auto 0100 = Preset Vlt 4 Auto 0101 = Preset Vlt 5 Auto 0110 = Preset Vlt 6 Auto 0111 = Preset Vlt 7 Auto 1000 = Term Blk Manual 1001 = DPI Port 1 Manual 1010 = DPI Port 2 Manual 1011 = DPI Port 3 Manual 1100 = DPI Port 4 Manual 1101 = DPI Port 5 Manual 1110 = Reserved 1111 = Jog Ref

(1) See Masks & Owners on page 66 for further information.

Reference Control

The field controller voltage command can be obtained from any of these sources:

- Digital inputs that are configured as voltage selects
- A digital input that is configured for "Auto/Manual"
- Reference Select bits of a command word (see Communication Configurations on page 135 for more information)

The actual source-parameter number is displayed in parameter 1329 [Volt Ref Source] with any modifications indicated in parameter 1330 [Vlt Ref Sel Sts].

"Auto" Voltage Sources

Analog input 1 is the default auto source for a command reference when these selections are configured:

- Parameter 70 [Anlg In1 Sel] (analog input 1) is set to "Volt Ref A"
- All voltage select digital inputs are open or not programmed

If any of the voltage-select digital inputs are closed, the field controller uses other parameters as the auto-voltage command source.

"Manual" Voltage Sources

The manual source for the voltage command to the field controller is one of these options:

- A HIM request for manual control (see ALT Functions on page 125)
- Control terminal block (analog input or MOP) if a digital input is programmed to "Auto/Manual"

Voltage Source Changes

The selection of the active voltage reference can be made through the digital inputs, DPI command, Jog button, or Auto/Manual HIM operation.

Figure 6 - Reference Selection Chart

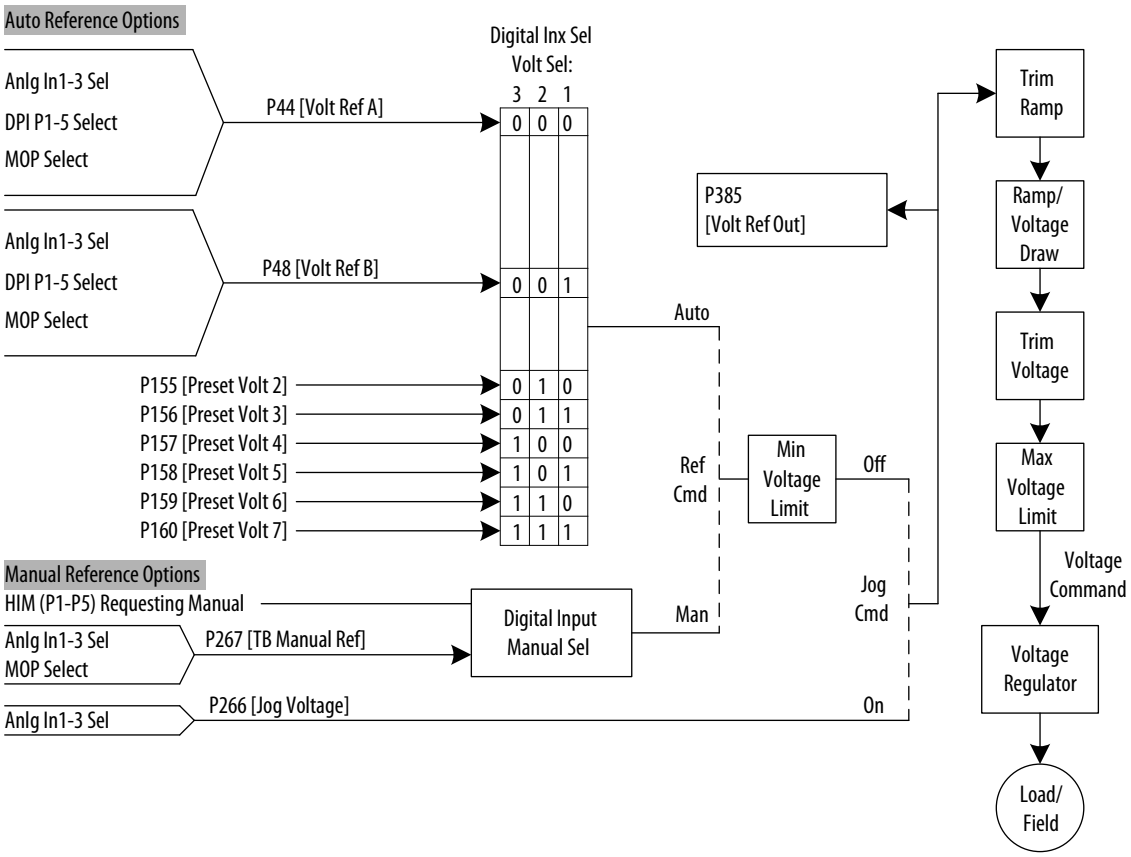

Reference Source

This section only applies to a PowerFlex DC Field Controller used in standalone mode.

The reference can be supplied by one of the following sources:

- Analog input
- HIM
- Network reference

You cannot switch between available sources while the field controller is running. Digital inputs that are programmed as "Volt Sel 1, 2, 3" and the HIM Auto/Manual function (see Figure 6 - Reference Selection Chart) do not affect the active current reference. The HIM, however, cannot acquire Manual Reference control while it is configured to supply the current reference.

If the PowerFlex DC Field Controller is used with a PowerFlex DC drive or Standalone Regulator, the current reference source is controlled by the drive or Standalone Regulator only. In this case, the current reference is configured by using the drive or Standalone Regulator parameters.

Auto/Manual Examples

PLC = Auto, HIM = Manual

A PLC controls a process when the field controller is in Auto mode, but requires manual control from the HIM during set-up. The PLC issues the voltage reference through a communication module that is installed in the field controller (Port 5). Therefore, parameter 1327 [DPI P5 Select] is set to "Volt Ref A" with the field controller running from the Auto source.

Acquire Manual Control

- Press ALT then Auto/Man on the HIM. When the HIM acquires manual control, the field controller voltage command comes from the HIM speed (voltage) control keys.

Release to Auto Control

- Press ALT then Auto/Man on the HIM again. When the HIM releases manual control, the field controller voltage command returns to the PLC.

PLC = Auto, Terminal Block = Manual

A programmable logic controller (PLC) controls a process when the field controller is in Automode, but requires manual control from an analog potentiometer that is wired to the field controller terminal block. The PLC issues the auto voltage reference through a communication module that is installed in the field controller (Port 5). Therefore, parameter 1327 [DPI P5 Select] is set to "Volt Ref A" with the field controller running from the Auto source. Because analog input 2 issues the manual voltage reference, parameter 75 [Anlg in2 Sel] is set to "TB Man Ref". The value of analog input 2 can be viewed in parameter 267 [TB Manual Ref]. To switch between Auto and Manual, parameter 136 [Digital In4 Sel] is set to "Auto/ Manual".

Acquire Manual Control

- Close the digital input. With the input closed, the voltage command comes from the pot.

Release to Auto Control

- Open the digital input. With the input open, the voltage command returns to the PLC.

Auto/Manual Notes

1. Manual control is exclusive. If a HIM or terminal block takes manual control, no other device can take manual control until the Him or terminal block releases control.
2. If a HIM has manual control and power is removed from the field controller, the field controller returns to Auto mode when power is reapplied.

Scale Blocks

The six individually configurable scale blocks let you link or rescale dissimilar parameter types (for example, integer vs. real) by using these functions:

- Multiply
- Divide
- Maximum and minimum limits
- Input and output offsets
- Absolute value

See Figure 7 - Scale Block 1 Block Diagram for an example.

IMPORTANT The scale blocks functions are executed sequentially in the background, which can cause a delay in processing data between the input and output values. The amount of delay is dependent on the application.

The following rules apply to scale blocks:

- All input [Scale*x* Input] and output [Scale*x* Output] values are specified as a parameter number (not parameter values).
- Both sink (read/write) and source (read only) parameters can be used as input values ([Scale*x* Input]).
- Only sink (read/write) parameters can be used as the output value ([Scale*x* Output]).
- Configuration parameters (parameters that can be changed only while the field controller is stopped) can be used as the output value ([Scale*x* Output]). However, any value that is written to a configuration parameter does not take effect in the field controller until it is stopped.
- The output value is truncated to a whole number when different parameter types are used. For example, a real input value of 54.97% becomes an integer output value of 54 rpm.
- Dividing by zero does not cause an error, but results in an output value of zero.
- Turning off (setting = “0”) the input parameter or changing the output parameter number does not reset or change the original output value. In other words, the output parameter remains at the last value written.

Figure 7 - Scale Block 1 Block Diagram

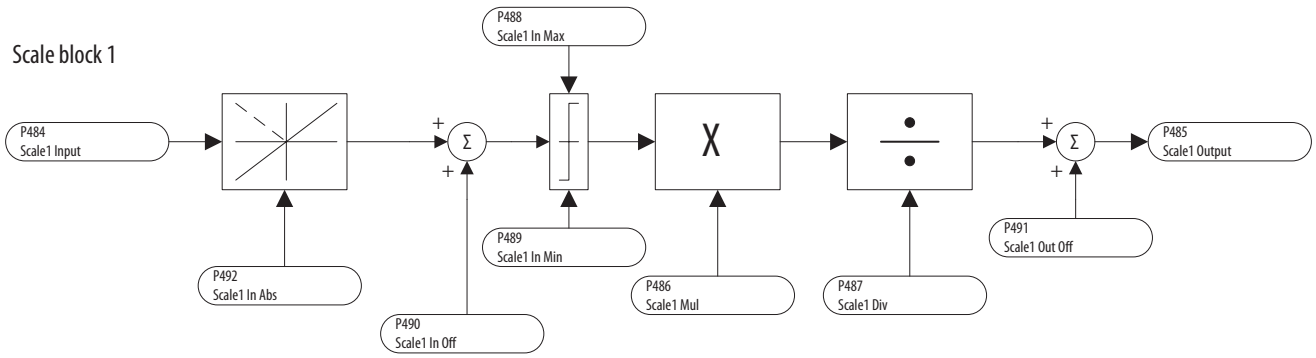

Link Parameters Via the Scale Block Parameters

You can enter most parameter values directly. However, certain parameters can be "linked" by using the scale block parameters so the value of one parameter becomes the value of another.

For example, the value of an analog input 1, parameter 70 [Anlg In1 Sel], can be linked to parameter 660 [Accel Time 1]. Follow these steps to link parameters.

1. Set parameter 70 [Anlg In1 Sel] to 12 "UserDefined0".
2. Set parameter 484 [Scale1 Input] to "503" (the parameter number of [UserDefined0]).
3. Set parameter 485 [Scale1 Output] to "660" (the parameter number of [Accel Time 1]).

Rather than entering an acceleration time via the HIM, this link allows the value to change by varying the analog signal, providing additional flexibility for certain applications. Test this functionality for the desired response before applying to an application.

SCR Diagnostic Tests

Two SCR diagnostic functions are available; (1) Open SCR, and (2) Shorted SCR. Each test is run to identify which SCR or SCR pair has failed, including multiple SCR failures. However, if the field controller cannot determine the specific shorted SCR or SCR pair, a shorted SCR (b15) is indicated in Par 214 [SCR Diag Status] and bits 0...11 remain off (0). Each diagnostic function can be enabled/disabled independently (default is disabled) via parameter 213 [SCR Diag Test En] and each operate after the field controller is started. Typically, enable the SCR diagnostic functions when a problem is suspected.

When enabled, the Shorted SCR test pulses each SCR/pair immediately after a Start command (and the contactor is closed). The test results in a short delay before controlling the load. If a shorted SCR is detected, a non-configurable fault is generated.

The Open SCR test monitors voltage and/or current and uses these adjustable parameters to determine when and if to initiate a fault or alarm:

- 215 [OpenSCR WarnLvl]
- 217 [OpenSCR Threshold]
- 218 [OpenSCR Trip Lvl]

You can configure parameter 216 [OpenSCR Flt Cfg] to indicate a fault or an alarm that is based on the Open SCR test results.

Parameter 214 [SCR Diag Status] shows which SCR(s) were detected as failed (open or shorted).

Open SCR Test

Under normal field controller operation, the load that each SCR carries is relatively equal, as shown in this image.

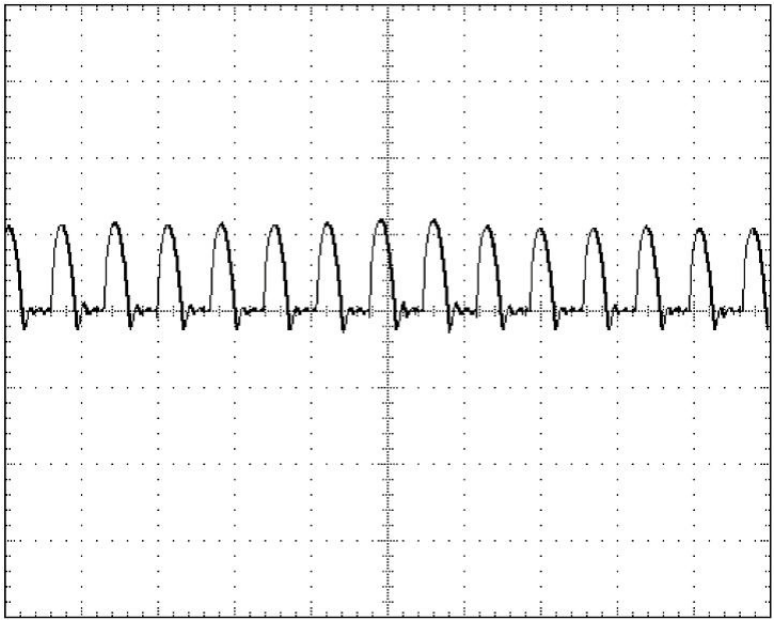

If one or more SCRs fail to turn on, a unique pattern of insufficient or missing current-pulses results, as shown in this image.

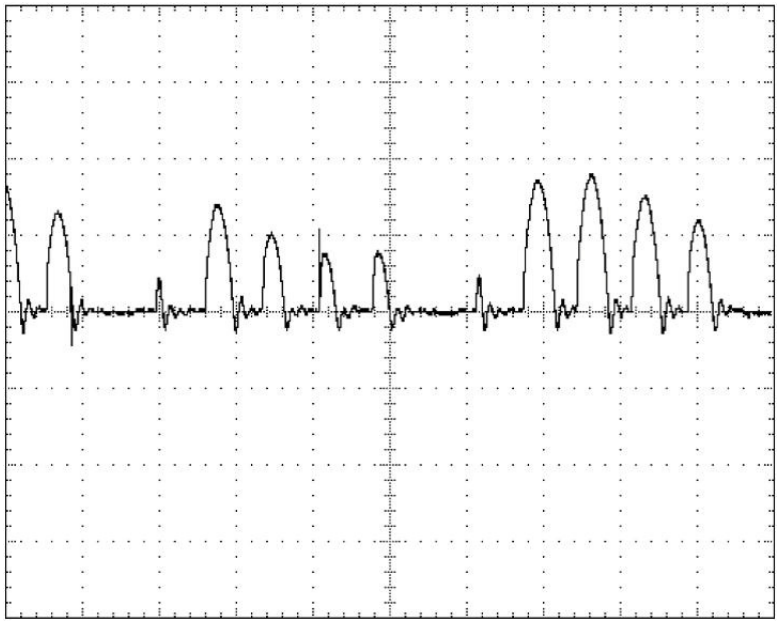

Open SCR diagnostics detects SCRs that are not conducting by analyzing the level of current produced by each SCR pair firing. If an SCR(s) consistently fails to produce current at a level approximately equal to other SCRs that fired, the field controller concludes that an open SCR has occurred.

The Open SCR diagnostic test calculates the percentage deviation of current feedback for each pair of SCRs from the average current feedback. The percent deviation must exceed the value set for Par 216 [OpenSCR Threshold] before the test proceeds to the next part of the diagnostic. In the next part, deviations from the average current are accumulated over time to eliminate transient effects from the calculation. When the deviations reach the value of Par 218 [OpenSCR Trip Lvl], an open SCR condition is annunciated based on Par 216 [OpenSCR Flt Cfg]. The open SCR(s) are indicated in Par 214 [SCR Diag Status].

You can configure the field controller to indicate a warning that SCR operation is imbalanced before a fault is generated. This warning is only indicated in Par 214 [SCR Diag Status], bit 13 "OpenSCR Warn". To configure the field controller to indicate a warning before a fault, set Par 215 [OpenSCR Warn Lvl] less than Par 218 [OpenSCR Trip Lvl]. To avoid nuisance open SCR events, such as an unbalanced AC supply line, use these parameters to increase the tolerance to the conditions that can trigger the event.

Shorted SCR Test

Once enabled, the shorted SCR test executes each time that the field controller is started. This test introduces a delay of a few seconds before controlling the load. If a shorted SCR is detected, a non-configurable fault (F89 [Shorted SCR]) is generated and also indicated in Par 214 [SCR Diag Status].

S-curve Configuration

To enable S-shaped ramp (S-curve) operation in the field controller, set Par 18 [Ramp Type Select] to 1 "S shaped." When S-curve operation is enabled, it allows for a smoother change in voltage than a linear ramp.

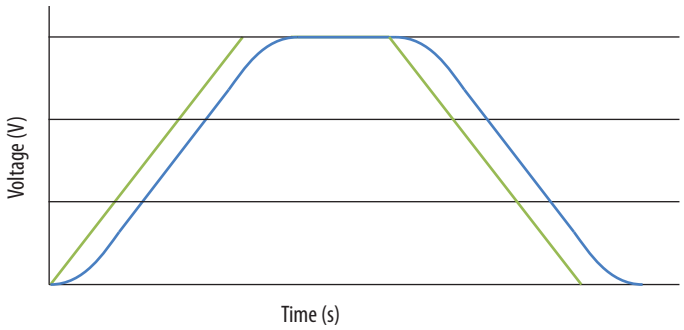

When S-curve is added to the ramp, the total length of time to perform a voltage change increases. When accelerating, the S-curve does not exceed the maximum acceleration set by parameters 24 and 660 [Accel Time *x*]. Likewise, when decelerating, the S-curve does not exceed the maximum deceleration set by parameters 32 and 662 [Decel Time *x*]. When the S-curve times are much smaller (<20%) than the linear acceleration times, the voltage profile is similar to a linear ramp (slightly delayed). As S-curve times are increased, more of the voltage profile is spent in the "s" (non-linear) and less in the linear acceleration section. When s-curve and linear ramp times are equal, there is no longer any

linear portion of the ramp (although maximum acceleration is reached at the mid-point of the total ramp). When S-curve time is larger than the linear ramp time, again there is no linear portion, and maximum acceleration is never reached. The same is true for deceleration ramps.

The total ramp time is independent of the change in the voltage reference. So, it takes the same amount of time to make a 10V change as it will for a 300V change. Do not "ramp" the reference externally to the field controller while S-curve is enabled in the field controller (it makes the ramp time longer).

When the S-shaped ramp <= Linear ramp, the S-shaped ramp voltage profile is divided into three sections:

- Initial (positive) "S" (jerk)
- Linear (constant acceleration)
- Final (negative) "S" (jerk)

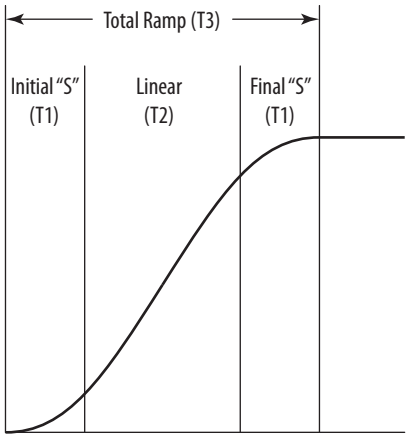

Approximately half of the value of parameter 19 [S Curve Time] is added to the initial "S" and half of the value is added to the final "S."

When the S-shaped ramp > Linear ramp, the linear portion becomes zero.

To calculate the total ramp time when S-curve is enabled, the amount of time in each section of the profile must be determined. T1 = initial S and final S, and T2 = linear.

The total ramp time T3 = T1+T2+T1 (each ramp has two equal "S" portions and one linear portion). In the following equations, Ta = linear ramp time (Pars 24, 32, 660, and 662), Ts = S-curve time (Par 19).

For S-shaped ramp <= Linear ramp

- T1 = (Ts * Ts) / (2 * Ta)
- T2 = Ta – T1

For S-shaped ramp > Linear ramp

- T1 = Ts/sqrt(2)
- T2 = 0

S-curve Acceleration Ramp Example:

Acceleration-ramp parameter configuration:

- Par 18 [Ramp Type Select] = 1 “S shaped”
- Par 660 [Accel Time 1] = 5 s (Ta)
- Par 19 [S Curve Time] = 3.5 s (Ts)

In this case, S-shaped ramp <= Lramp, so T1 and T2 are calculated as:

T1 = (3.5 * 3.5) / (2 * 5)

T1 = 12.25 / 10

T1 = 1.23 s

T2 = 5 – 1.23

T2 = 3.78 s

The resulting total ramp time is calculated as:

T3 = 1.23 + 3.78 + 1.23

T3 = 6.24 s

Therefore, the total acceleration-ramp time with S-curve enabled in this example increased the total ramp time without S-curve by 1.24 seconds.

Voltage Regulation Functions

The PowerFlex DC Field Controller provides a flexible voltage regulator circuit that can be adapted to the requirements of various applications. The field controller is set to PI regulation by default. The field controller acts as a current regulator by default.

Adaptive Voltage Regulation

The adaptive voltage regulator function enables different gains of the voltage regulator depending on the voltage reference or another variable (adaptive reference). This feature allows optimum adaptation of the voltage regulator to the specific application.

The internal value of these gains is shown in Testpoints 575...580 (see Testpoint Codes and Functions on page 101). The internal value represents the voltage regulator gains.

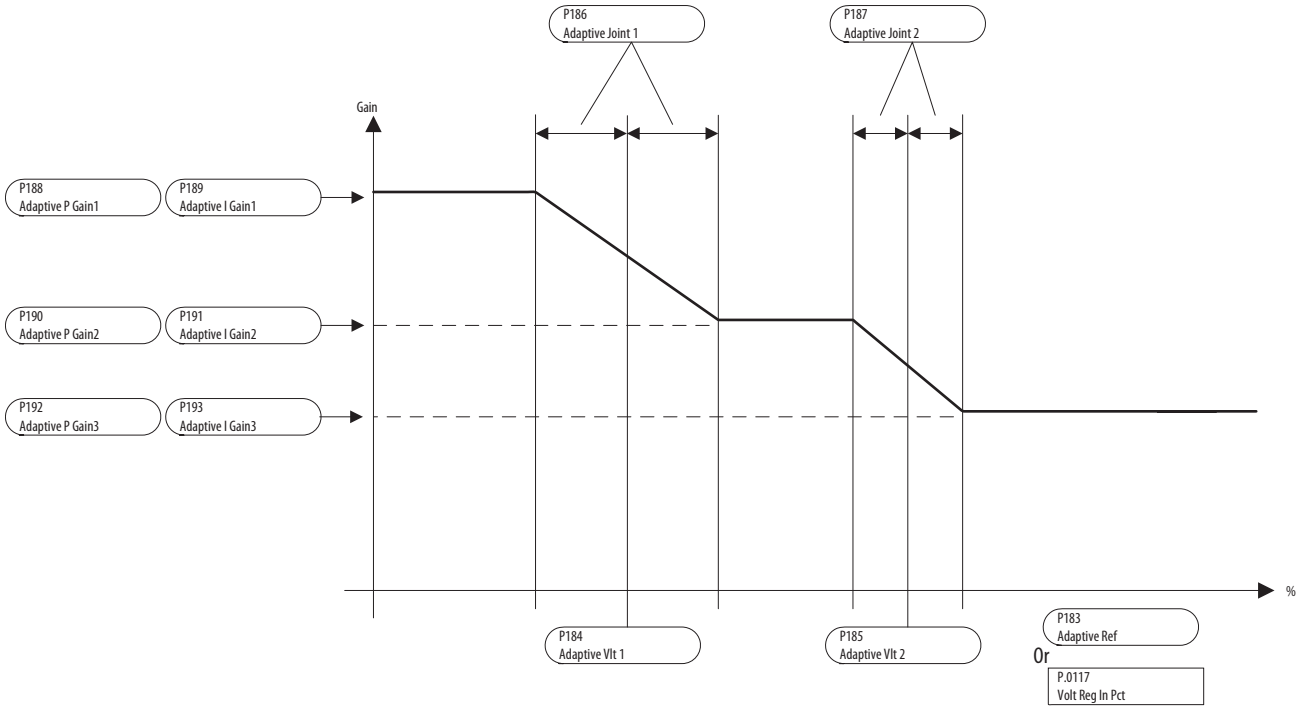

The adaptive voltage regulator is enabled when parameter 181 [Adaptive Vlt En] = "1 Enabled". Normally the gain depends on the voltage of the field controller. It can, however, follow a variable reference that is defined in parameter 183 [Adaptive Ref]. The type of regulation that is used is selected in parameter 182 [Adaptive Reg Typ]; 0 = "Voltage", or 1 = "Adaptive Ref".

Parameters 184 [Adaptive Vlt 1] and 185 [Adaptive Vlt 2] are used to define the three ranges that can have different gains. A parameter set can be defined for each of these ranges, with each set containing an individually definable P and I component. The three sets of parameters are: 188 [Adaptive P Gain1] and 189 [Adaptive I Gain1], 190 [Adaptive P Gain2] and 191 [Adaptive I Gain2], and 192 [Adaptive P Gain3] and 193 [Adaptive I Gain3]). When the adaptive voltage regulator is enabled, the first set of parameters is active until the voltage specified in Par 184 [Adaptive Vlt 1] or Par 183 [Adaptive Ref] is reached.

Parameters 186 [Adaptive Joint 1] and 187 [Adaptive Joint 2] provide a smooth transition between the different parameter sets. The fields must be defined so that [Adaptive Joint 1] and [Adaptive Joint 2] do not overlap.

When the adaptive voltage regulator is enabled, parameters 87 [Vlt Reg Kp] and 88 [Vlt Reg Ki] have no effect on the voltage regulator. They do, however, retain their value and are active when the adaptive voltage regulator is disabled.

Configuring the Adaptive Voltage Regulator

- Set Par 181 [Adaptive Vlt En] = "1 Enabled"

- If the gain must be changed based on units other than the field controller voltage reference, set Par 182 [Adaptive Reg Typ] = 1 "Adaptive Ref". The adaptive reference is provided to the field controller as an analog value via an analog input. For this reason, Par 183 [Adaptive Ref] must be assigned to an analog input. The other possibility is to enter the value of Par 183 [Adaptive Ref] via the HIM. In this case, the analog input is not necessary.

- Enter the appropriate values in Par 184 [Adaptive Vlt1] and Par 185 [Adaptive Vlt 2] to define the three voltage ranges. Values are expressed as a percentage of Par 175 [Load Rated Volt] and the maximum value of Par 183 [Adaptive Ref].

- When Par 182 [Adaptive Reg Typ] = 0 "Voltage", tuning is completed via Fine Tune the Regulators on page 153. In this case the following points must be considered:

  - The value that is entered in Par 61 [TstGen Offset] must meet these constraints:

    - Set to the low end of the voltage range to be tuned

    - Set outside the range of the values in parameters [Adaptive Joint *x*]

  - Enter the step value in Par 60 [TstGen Amplitude], so that the voltage remains inside the range to be tuned.
  - The optimization is conducted separately for each range and the parameters of the regulator are set for each range with Pars [Adaptive P Gain*x*] and [Adaptive I Gain*x*].
  - After the optimization of the different phases, review the entire voltage range. By changing the value of [Adaptive Joint x], it is possible to reduce the instabilities present in the transients during the changes from one range to the other. Increasing the values transients are slighter.

- When Par 182 [Adaptive Reg Typ] = 1 "Adaptive Ref", tuning is application-specific.

- When the voltage zero logic (see page 150) is disabled (factory default setting) and the field controller is disabled, the gains of the voltage regulator are active. These gains are set via Pars 188 [Adaptive P Gain1] and 189 [Adaptive I Gain1]. When the voltage zero logic is enabled, the values set when the load voltage regulation is stopped are valid.

Voltage Threshold Indicators

There are two voltage threshold functions available that can be programmed by using a digital output to provide indication of when the field controller has exceeded certain set points.

Par 393 [Volt Threshold] displays whether the voltage of the field controller is above or below a set voltage for positive and negative polarities. Set the threshold voltage for positive polarity in Par 101 [Volt Thresh Pos] and set the threshold voltage for negative polarity in Par 102 [Volt Thresh Neg]. You can specify a delay time in Par 103 [Threshold Delay] that must elapse before indication that the voltage has fallen below the threshold values. Par 393 [Volt Threshold] can be assigned to a digital output. The assigned digital output changes state only at the positive voltage threshold.

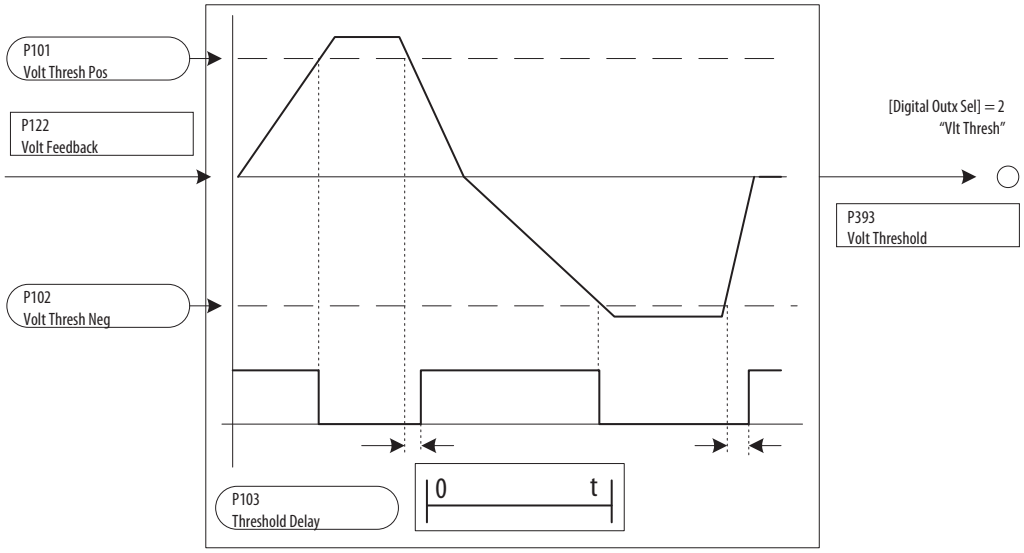

The value of Par 394 [At Voltage] identifies if the field controller voltage is equal or not equal to the set voltage reference (in Par 118 [Volt Reg In]) before the voltage regulator and ramp reference (if enabled) are applied. The voltage above and below the voltage reference at which indication occurs is set in Par 104 [At Volt Error]. Use Par 105 [At Volt Delay] to specify a delay time before indication that the voltage reference is within the range set in Par 104 [At Volt Error] occurs. Par 394 [At Voltage] can be assigned to a digital output.

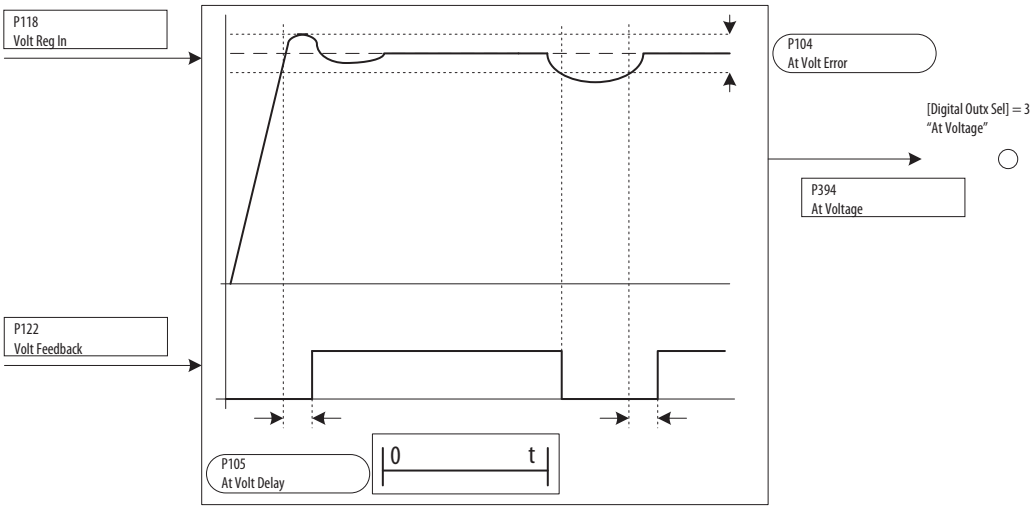

Voltage Zero Function

The Voltage Zero Logic determines the behavior of the field controller when the load (was motor) is at zero voltage. See the Voltage Adaptive and Voltage Zero Logic block diagram on page 115.

Configuring the Voltage Zero Logic

It is possible to avoid field controller creep when the load is at zero voltage by disabling the Integral section of the Voltage regulator. By default, the output of the Integral portion of the Voltage regulator is disabled (Par 123 [Vlt Zero I En] = 0 “Disabled”).

IMPORTANT If the voltage regulator is disabled, the load cannot receive current when it is stopped. Therefore this function is not suitable for all applications.

Disable the output of the P gain of the Voltage regulator by setting Par 126 [Vlt Zero P Gain] to one of the following settings:

- If the voltage reference is above the value set in Par 106 [Ref Zero Level]: Set Par 124 [Vlt Ref Zero En] = 1 “Enabled”
- If the voltage reference and/or the reaction are above the value set in Par 106 [Ref Zero Level], set Par 124 [Vlt Ref Zero En] = 0 “Disabled”

Par 124 [Vlt Ref Zero En] is active only when Par 125 [Vlt Zero P En] = 1 “Enabled”.

Set the P gain for zero voltage:

- If the P gain corresponds to the value set in Par 126 [Vlt Zero P Gain], then set Par 125 [Vlt Zero P En] = 1 “Enabled”
- If the P gain corresponds to the normal P gain, then set Par 125 [Vlt Zero P En] = 0 “Disabled”

The P gain at zero voltage is set via Par 126 [Vlt Zero P Gain] when Par 125 [Vlt Zero P En] = 1 “Enabled”.

The value of Par 106 [Ref Zero Level] determines the threshold for the recognition of zero voltage.

Voltage Draw Function

The Voltage Draw function can be used to apply a configurable voltage ratio (set in Par 1017 [Volt Ratio]) to the main voltage reference of the field controller. This function is useful in a multi-device system where a

proportional voltage increase between the loads (was motors) is required. The range of parameter 1017 [Volt Ratio] can be set in one of these ways:

- 0...32767, if written in digital form
- 0...20000 (0V to +10V), if assigned to an analog input

The resulting voltage value can be viewed in Par 1018 [Volt Draw Out] via an analog output.

Voltage / Current Mode Selection

By default, the field controller is configured to run in current mode. However, Par 241 [Vlt Cur Mode Sel] is used to choose whether the field controller operates as a current regulator or a voltage regulator. Each mode is discussed in more detail in this section. See the Current Mode Selection block diagram on page 111 for more information.

Zero Current Mode

Zero current mode is allowed when Par 241 [Vlt Cur Mode Sel] is set to 0 "Zero Cur Ref".

Voltage Regulation Mode

When Par 241 [Vlt Cur Mode Sel] is set to 1 "Volt Reg", the field controller is operated in voltage mode with the reference equal to the value of Par 117 [Vlt Reg In Pct]. However, the field controller is primarily intended to regulate the output current for connected loads. In current regulation mode, the field controller will generate a certain amount of output voltage overshoot. This voltage overshoot is due to the field controller working to reach the current reference as quickly as possible when controlling a high inductive load. The voltage mode is intended to be used to prevent this overshoot, causing the output current to have slower dynamics.

Current Regulation Mode

by default, Par 241 [Vlt Cur Mode Sel] is set to 2 "Curr Reg" for current mode. In current regulation mode, the field controller controls the desired output current. The reference signal is equal to the value of Par 39 [Current Ref].

Digital Current Regulation

Set Par 241 [Vlt Cur Mode Sel] to 3 "Dig Curr Reg" to use the current reference received over the fiber-optic connections from a PowerFlex DC drive with the Fiber-optic Interface option module installed. The current reference value is reported in Par 862 [Digital Curr Ref]. In this mode, the field controller manages the fiber-optic communication interface. If communication fails, an "SSC Error" (F20) fault occurs.

Start at Powerup

The "Start At Powerup" function lets you resume running at commanded voltage or current (depending on the configured regulation mode) automatically after these conditions are met:

- Field controller input power is restored
- A run command is issued
- All start permissive conditions are met (see Figure 8 - Start Permissives Flow Diagram)

To enable this feature, parameter 1344 [Start At Powerup] must be set to 1 "Enable".

ATTENTION: Equipment damage and/or personal injury may result if this parameter is used in an inappropriate application. Do not use this function without considering applicable local, national, and international codes, standards, regulations, or industry guidelines.

In addition, A delay time of up to 10800 seconds (3 hours) can be programmed in parameter 1345 [Powerup Delay]. An automatic field controller restart is not possible before the delay time has expired. If a "Start", "Run" or "Stop" command is asserted before the time in this parameter expires, the "Start At Powerup" function is aborted.

Figure 8 - Start Permissives Flow Diagram

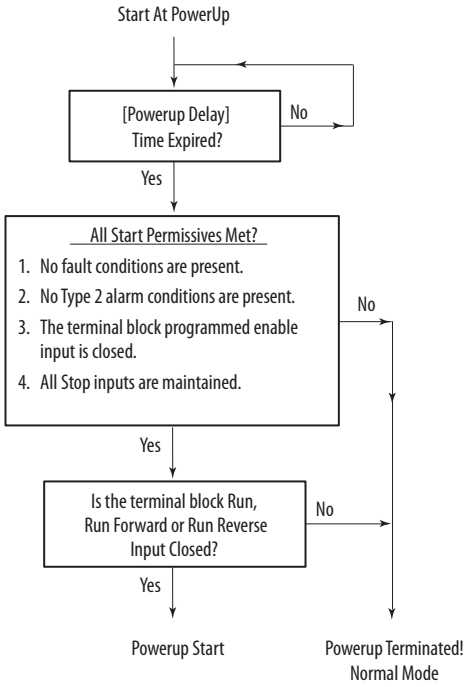

Until the time that is specified in parameter 1345 [Powerup Delay] elapses, these indications occur:

- An alarm indicator " " is displayed on the HIM
- Bit 12 "PwrUp Start" of parameter 1380 [Device Alarm 1] is set to "1"

Fine Tune the Regulators

The field controller control regulators have predefined values that are meant to provide consistent performance without performing any further configuration. However, the fine-tuning procedures can be used to optimize the output and control features of the field controller.

The field controller contains the following regulation circuits:

- **Current regulator** - The current controller auto-tuning procedure is run by using Par 452 [CurrReg Autotune]. See Tune the Current Regulator on page 17.
    - If the current regulator auto tuning procedure fails you can manually tune the regulator. See Manually Adjust the Current Regulator Tune Settings on page 153.
- **Voltage regulator** - The voltage regulator is used to provide current regulation without voltage overshoot. For non-motor loads, the regulation of current and voltage provide, after a transient, the same outputs, as voltage and current are related to each other through the value of the load resistance. Due to the high inductance of the load, in order to have stable voltage/current regulation, the voltage regulator gains must be kept rather low because the voltage dynamics must follow the slower current dynamics. See Manually Adjust the Voltage Regulator on page 155.

To obtain a step function, the internal "Test generator" can be used. The goal of the fine-tuning procedures is to obtain an optimal step response. For example, it is recommended that you directly measure the step response for the field current regulator.

The field current can be directed to an analog output on the Terminal Block (with a 2 ms sample rate).

Using the Test Generator

The "Test Generator" function creates signals with a rectangular wave form based on a specific frequency and amplitude. The frequency and amplitude can be added to a configurable offset value, if needed. Par 58 [TstGen Output] determines which regulator input signal (reference) is used; current, ramp, or voltage.

Manually Adjust the Current Regulator Tune Settings

The PowerFlex DC Field Controller PI gains defaults are intended to provide consistent current regulation of an inductive load (such as a motor field) or a magnet after a transient, without manually tuning the PI. However, when a transient occurs, a limited amount of current overshoot can happen, which can negatively affect the current dynamics when the reference is changed. You can

reduce the amount of current overshoot by increasing the value of Par 847 [DC Curr P] from 0.5 to a higher value (for example 50 or 60) and increasing the value of Par 848 [DC Curr I] from 30 to a higher value (for example 50...60).

The default values of Pars 847 [DC Curr P] and 848 [DC Curr I] have been set to provide adequate current control when the field controller is connected to a low inductive load (for example, a motor armature or bus bar).

An autotune can fail for a highly inductive load when the load nominal voltage is close to the maximum output voltage of the field controller and/or when the load nominal current is a small percentage of the device current rating. In this cases, follow these steps to manually adjust the current regulator settings.

ATTENTION: Uncontrolled machine operation could result during these tests and may cause equipment damage or personal injury. For a field or non-motor load, verify that the load is isolated from other components in the system. If the field controller is connected to a motor field, verify that the motor armature circuit is disconnected.

1. Access the “Load Control” file and “Current Reg” group.
2. Set Par 847 [DC Curr P] = 60
3. Set Par 848 [DC Curr I] = 60
4. Set Par 839 [CD Factor P] accordingly:
   - If Par 179 [Load Rated Curr] is greater than 20% of Par 465 [Device Size], set Par 839 = 0.3
   - If Par 179 [Load Rated Curr] is less than 20% of Par 465 [Device Size], set Par 839 = 1
5. Set Par 840 [CD Factor I] = 1
6. Access the “Dynamic Control” file, “Control Config” group, verify that Par 241 [Vlt Cur Mode Sel] = 2 (default).
7. Access the “Load Control” file, “Test Generator” group, set Pars 59 [TstGen Frequency], 60 [TstGen Amplitude], and 61 [TstGen Offset] accordingly to generate steps from 0 to 100% with a current reference (Par 59 [TstGen Output] set to 2 "Current Ref") to adjust these gains in this way:
   - Resulting in an increased value (higher than the default) in Par 847 [DC Curr P] to minimize overshoot amounts and provide a quicker response to 0 to 100% reference variations. Note that too high, or too low, of a value can result in some instability
   - Resulting in an increased value (higher than the default) in Par 848 [DC Curr I] to provide quicker rise times and a decreased value to lower the overshoot amounts

When the current regulator autotuning completes successfully, the tuning can be optimized in the following way:

- To have a quicker rise time in response to a 0 to 100% current reference step increase the value of Par 848 [DC Curr I].

- If the rise time in response to a 0 to 100% current reference step is satisfactory, but slow rise times are noticed in smaller steps of current reference (for example 0 to 50%), increase the value of Par 848 [DC Curr I] and decrease the value of Par 840 [CD Factor I] to keep the value of Par 848 x Par 840 constant.

Manually Adjust the Voltage Regulator

The voltage regulator PI gains must be set low in order to have similar current and voltage dynamics. Follow these steps to manually adjust the voltage regulator settings.

1. Access the Volt Command file, Volt Regulator group, and set the values of Par 87 [Vlt Reg Kp] and Par 88 [Vlt Reg Ki] according to the two equations shown here, so that the values of Par 1034 [VltReg Kp Pct] and Par 1035 [VltReg Ki Pct] are equal to 0.2.
   - Par 1034 = (Par 87 x Par 179 / Par 175) / Par 93 x 100
   - Par 1035 = (Par 88 x Par 179 / Par 175) / 10 / Par 94
2. Access the Dynamic Control file, Control Config group, and set Par 241 [Vlt Cur Mode Sel] = 1 “Volt Reg”.
3. Access the Load Control file, Test Generator group, set Pars 59 [TstGen Frequency], 60 [TstGen Amplitude], and 61 [TstGen Offset] accordingly to generate steps from 0 to 100% with a voltage reference (Par 59 [TstGen Output] set to 5 "Volt Ref") to adjust these gains in this way:
   - Resulting in an increased value in Par 87 [Vlt Reg Kp] (and therefore Par1034 [VltReg Kp Pct]) to provide a quicker response to reference variations, less overshoot, or a decreased value to provide more stability
   - Resulting in an increased value in Par 88 [Vlt Reg Ki] (and therefore Par 1035 [VltReg Ki Pct]) to provide quicker rise times, or a decreased value to provide less overshoot

Notes:

A

B

C

D

E

F

H

I

J

L

M

N

O

P

R

S

T

U

V

W

Z

Notes:

Rockwell Automation Support

Use the following resources to access support information.

Technical Support Center	Knowledgebase Articles, How-to Videos, FAQs, Chat, User Forums, and Product Notification Updates.	https://rockwellautomation.custhelp.com/
Local Technical Support Phone Numbers	Locate the phone number for your country.	http://www.rockwellautomation.com/global/support/get-support-now.page
Direct Dial Codes	Find the Direct Dial Code for your product. Use the code to route your call directly to a technical support engineer.	http://www.rockwellautomation.com/global/support/direct-dial.page
Literature Library	Installation Instructions, Manuals, Brochures, and Technical Data.	http://www.rockwellautomation.com/global/literature-library/overview.page
Product Compatibility and Download Center (PCDC)	Get help determining how products interact, check features and capabilities, and find associated firmware.	http://www.rockwellautomation.com/global/support/pcdc.page

Documentation Feedback

Your comments will help us serve your documentation needs better. If you have any suggestions on how to improve this document, complete the How Are We Doing? form at http://literature.rockwellautomation.com/idc/groups/literature/documents/du/ra-du002_-en-e.pdf.

Rockwell Otomasyon Ticaret A.Ş., Kar Plaza İş Merkezi E Blok Kat:6 34752 İçerenköy, İstanbul, Tel: +90 (216) 5698400

www.rockwellautomation.com

Power, Control and Information Solutions Headquarters

Americas: Rockwell Automation, 1201 South Second Street, Milwaukee, WI 53204-2496 USA, Tel: (1) 414.382.2000, Fax: (1) 414.382.4444
Europe/Middle East/Africa: Rockwell Automation NV, Pegasus Park, De Kleetlaan 12a, 1831 Diegem, Belgium, Tel: (32) 2 663 0600, Fax: (32) 2 663 0640
Asia Pacific: Rockwell Automation, Level 14, Core F, Cyberport 3, 100 Cyberport Road, Hong Kong, Tel: (852) 2887 4788, Fax: (852) 2508 1846

Publication 23PFC-PM001A-EN-P - December 2017