PowerFlex 700S High Performance AC Drive - Phase II Control

Catalog Number 20D

Allen-Bradley
by ROCKWELL AUTOMATION

Programming Manual

Original Instructions

Important User Information

Read this document and the documents listed in the additional resources section about installation, configuration, and operation of this equipment before you install, configure, operate, or maintain this product. Users are required to familiarize themselves with installation and wiring instructions in addition to requirements of all applicable codes, laws, and standards.

Activities including installation, adjustments, putting into service, use, assembly, disassembly, and maintenance are required to be carried out by suitably trained personnel in accordance with applicable code of practice.

If this equipment is used in a manner not specified by the manufacturer, the protection provided by the equipment may be impaired.

In no event will Rockwell Automation, Inc. be responsible or liable for indirect or consequential damages resulting from the use or application of this equipment.

The examples and diagrams in this manual are included solely for illustrative purposes. Because of the many variables and requirements associated with any particular installation, Rockwell Automation, Inc. cannot assume responsibility or liability for actual use based on the examples and diagrams.

No patent liability is assumed by Rockwell Automation, Inc. with respect to use of information, circuits, equipment, or software described in this manual.

Reproduction of the contents of this manual, in whole or in part, without written permission of Rockwell Automation, Inc., is prohibited.

Throughout this manual, when necessary, we use notes to make you aware of safety considerations.

WARNING: Identifies information about practices or circumstances that can cause an explosion in a hazardous environment, which may lead to personal injury or death, property damage, or economic loss.

ATTENTION: Identifies information about practices or circumstances that can lead to personal injury or death, property damage, or economic loss. Attentions help you identify a hazard, avoid a hazard, and recognize the consequence.

IMPORTANT Identifies information that is critical for successful application and understanding of the product.

These labels may also be on or inside the equipment to provide specific precautions.

SHOCK HAZARD: Labels may be on or inside the equipment, for example, a drive or motor, to alert people that dangerous voltage may be present.

BURN HAZARD: Labels may be on or inside the equipment, for example, a drive or motor, to alert people that surfaces may reach dangerous temperatures.

ARC FLASH HAZARD: Labels may be on or inside the equipment, for example, a motor control center, to alert people to potential Arc Flash. Arc Flash will cause severe injury or death. Wear proper Personal Protective Equipment (PPE). Follow ALL Regulatory requirements for safe work practices and for Personal Protective Equipment (PPE).

The following icon may appear in the text of this document.

Identifies information that is useful and can help to make a process easier to do or easier to understand.

Preface

Chapter 1

Drive Start-Up

Chapter 2

Programming and Parameters

Chapter 3

Troubleshooting

Appendix A

Human Interface Module Overview

Appendix B

Application Notes

Appendix C

Control Block Diagrams

Appendix D

PowerFlex 700S Permanent Magnet Motor Specifications

Appendix E

ATEX/UKEX Approved PowerFlex 700S, Phase II Drives in Group II Category (2) Applications with ATEX/UKEX Approved Motors

Preface

The purpose of this manual is to provide you with the information needed to start-up, program and troubleshoot PowerFlex 700S Phase II Adjustable Frequency AC drives.

This manual is intended for qualified personnel. You must be able to program and operate adjustable frequency AC drives. In addition, you must have an understanding of the parameter settings and functions of this drive and programmable controllers for PowerFlex 700S Phase II drives with DriveLogix.

Summary of Changes

This publication contains the following new or updated information. This list includes substantive updates only and is not intended to reflect all changes.

Topic	Page
Updated the description for parameter 408 [Power Loss Level].	76
Updated ATEX to ATEX/UKEX where it appears throughout Appendix E - ATEX/UKEX Approved PowerFlex 700S, Phase II Drives in Group II Category (2) Applications with ATEX/UKEX Approved Motors.	203
Removed the obsoleted Appendix F - History of Changes from this manual.	—

General Precautions

Qualified Personnel

ATTENTION: Only qualified personnel familiar with the PowerFlex 700S Drive and associated machinery should plan or implement the installation, start-up and subsequent maintenance of the system. Failure to comply may result in personal injury and/or equipment damage.

Personal Safety

ATTENTION: To avoid an electric shock hazard, verify that the voltage on the bus capacitors has discharged before performing any work on the drive. Measure the DC bus voltage at the Power Terminal Block by measuring between the +DC and –DC terminals, between the +DC terminal and the chassis, and between the -DC terminal and the chassis. The voltage must be zero for all three measurements.

ATTENTION: Hazard of personal injury or equipment damage exists when using bipolar input sources. Noise and drift in sensitive input circuits can cause unpredictable changes in motor speed and direction. Use speed command parameters to help reduce input source sensitivity.

ATTENTION: Risk of injury or equipment damage exists. DPI or SCANport host products must not be directly connected together via 1202 cables. Unpredictable behavior can result if two or more devices are connected in this manner.

ATTENTION: Risk of injury or equipment damage exists. Parameters 365 [Fdbk LsCnfg Pri]...394 [VoltFdbkLossCnfg] let you determine the action of the drive in response to operating anomalies. Precautions should be taken to ensure that the settings of the parameters do not create hazards of injury or equipment damage.

ATTENTION: Risk of injury or equipment damage exists. Parameters 383 [SL CommLoss Data]...392 [NetLoss DPI Cnfg] let you determine the action of the drive if communications are disrupted. You can set the parameters so that the drive continues to run. Precautions should be taken to ensure that the settings of the parameters do not create hazards of injury or equipment damage.

Product Safety

ATTENTION: An incorrectly applied or installed drive can result in component damage or a reduction in product life. Wiring or application errors such as under sizing the motor, incorrect or inadequate AC supply, or excessive surrounding air temperatures may result in malfunction of the system.

ATTENTION: This drive contains ESD (Electrostatic Discharge) sensitive parts and assemblies. Static control precautions are required when installing, testing, servicing or repairing drive assemblies. Component damage may result if ESD control procedures are not followed. If you are not familiar with static control procedures, reference Guarding Against Electrostatic Damage, publication 8000-4.5.2 or any other applicable ESD protection handbook.

ATTENTION: A contactor or other device that routinely disconnects and reapplies the AC line to the drive to start and stop the motor can cause drive hardware damage. The drive is designed to use control input signals that will start and stop the motor. If an input device is used, operation must not exceed one cycle per minute or drive damage will occur.

Class 1 LED Product

ATTENTION: Hazard of permanent eye damage exists when using optical transmission equipment. This product emits intense light and invisible radiation. Do not look into module ports or fiber optic cable connectors.

Additional Resources

These documents contain additional information concerning related products from Rockwell Automation.

Resource	Description
PowerFlex 700S Phase II Drive, Frames 1…6 Installation Instructions, publication 20D-IN024	Provides you with the information needed to install and wire PowerFlex 700S Phase II frame 1…6 drives.
PowerFlex 700H and 700S Drives, Frames 9…14 Installation Instructions, publication PFLEX-IN006	Provides you with the information needed to install and wire PowerFlex 700S Phase II frame 9…14 drives.
PowerFlex 700S Phase II Reference Manual, publication PFLEX-RM003	Provides detailed explanations and examples of PowerFlex 700S Phase II drive control functions and application programming.
Drives in Common Bus Configurations, publication DRIVES-AT002	This publication to provide the necessary guidelines, considerations, and limitations for the proper application of PowerFlex drives used in common bus configurations.
Stegmann Feedback Option for PowerFlex 700S Drives Installation Instructions, publication 20D-IN001	Provides instructions for installing the Stegmann feedback option board for PowerFlex 700S drives.
Resolver Feedback Option for PowerFlex 700S Drives Installation Instructions, publication 20D-IN002	Provides instructions for installing the resolver feedback option board for PowerFlex 700S drives.
Multi-Device Interface for PowerFlex 700S Drives Installation Instructions, publication 20D-IN004	Provides instructions for installing the multi-device interface option board for PowerFlex 700S drives.

Resource	Description
Second Encoder Option for PowerFlex 700S Drives with Phase II Control Installation Instructions, publication 20D-IN009	Provides instructions for installing the second encoder option board for PowerFlex 700S drives.
SynchLink™ Board for PowerFlex 700S Drives with Phase II Control Installation Instructions, publication 20D-IN010	Provides instructions for installing the SynchLink option board for PowerFlex 700S drives.
DriveLogix 5730 Controller User Manual, publication 20D-UM003	Provides information to help you develop projects for DriveLogix controllers and establish communications with PowerFlex 700S Phase II drives.
Safe Torque Off Option for PowerFlex 700S Phase II AC Drives and PowerFlex 700L Liquid-Cooled AC Drives, publication 20D-UM007	The DriveGuard Safe Torque Off option, when used with other safety components, helps provide protection to meet the requirements for SIL CL2 and Category 3 or PL d class applications. Safety requirements are based on the standards current at the time of certification.
Logix5000 Controllers Common Procedures Programming Manual, publication 1756-PM001	This publication links to a collection of programming manuals that describe how you can use procedures that are common to all Logix5000 controller projects.
Logix5000 Controllers General Instructions Reference Manual, publication 1756-RM003	Provides a programmer with details about each available instruction for a Logix-based controller.
Logix5000 Controllers Process Control and Drives Instructions Reference Manual, publication 1756-RM006	Provides a programmer with details about each available instruction for a Logix-based controller.
SynchLink System Design Guide, publication 1756-TD008	Provides a detailed description of SynchLink and the products that operate on it, including: • ControlLogix SynchLink module (1756-SYNCH) • ControlLogix Drive modules (1756-DMxxx Series) • PowerFlex 700S drives
Wiring and Grounding for Pulse Width Modulated (PWM) AC Drives, publication DRIVES-IN001	Provides basic information needed to properly wire and ground Pulse Width Modulated (PWM) AC drives.
Safety Guidelines for the Application, Installation and Maintenance of Solid State Control, publication SGI-1.1	Provides general guidelines for the application, installation, and maintenance of solid-state control in the form of individual devices or packaged assemblies incorporating solid state components.
Industrial Automation Wiring and Grounding Guidelines, publication 1770-4.1	Provides general guidelines for installing a Rockwell Automation industrial system.
Product Certifications website https://compatibility.rockwellautomation.com/Pages/home.aspx	Provides declarations of conformity, certificates, and other certification details.

You can view or download publications at http:/www.rockwellautomation.com/literature/. To order paper copies of technical documentation, contact your local Allen-Bradley distributor or Rockwell Automation sales representative.

Drive Start-Up

This chapter provides the information necessary to start up the PowerFlex® 700S Phase II drive.

Drive Start-Up Checklist

? A **Human Interface Module (HIM) is required** to complete this Start-Up procedure, which uses the **Assisted Start** routine. The Assisted Start routine prompts you for information that is needed to start up a drive for most applications, such as line and motor data, commonly adjusted parameters and I/O settings. The Assisted Start routine also performs autotuning procedures. See Figure 1 on page 12 for a flow chart of the Assisted Start routine.

? A **HIM must be installed** in Drive Peripheral Interface (DPI) Port 1 or 2. If a HIM is not installed, a remote device should be used to start-up the drive. Refer to Human Interface Module Overview on page 151 for more information on using the PowerFlex 7-Class (DPI) HIM. Refer to the *Enhanced PowerFlex 7-Class HIM User Manual*, publication 20HIM-UM001, for information on using the Enhanced HIM (if installed).

DPI Ports 1 and 2

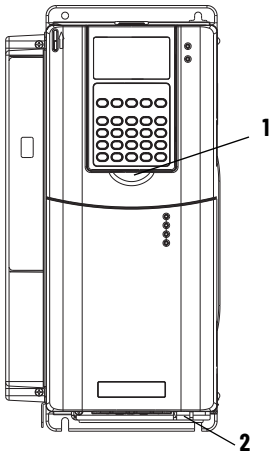

? **3-wire control** is the default (and recommended) mode of use for the Assisted Start routine. In this case, the drive will start when the HIM "Start" key is pressed and stop when the HIM "Stop" key is pressed. If the drive is configured for 2-wire control, the HIM installed on the drive will also act as a 2-wire device. In 2-wire mode, the drive will start when the HIM "Start" key is pressed and stop when the HIM "Start" key is released.

? **Analog and Digital I/O** parameter values may be modified when using the Assisted Start routine.

IMPORTANT If you have a DriveLogix™ application, you must first connect the battery before starting this section. Refer to the DriveLogix™ 5730 Controller for PowerFlex 700S Drives with Phase II Control, publication 20D-UM003, for details.

Prepare for Initial Drive Start-Up

ATTENTION: Power must be applied to the drive to perform the following start-up procedure. Some of the voltages present are at incoming line potential. To avoid electric shock hazard or damage to equipment, only qualified service personnel should perform the following procedure. Thoroughly read and understand the procedure before beginning.

1. Confirm that all inputs are connected to the correct terminals and are secure.
2. Verify that AC line power at the disconnect device is within the rated value of the drive.
3. Verify that control power voltage is correct.
4. Apply AC power and control voltages to the drive. The drive and HIM will power up.

   IMPORTANT When power is first applied, the HIM may require approximately five seconds until commands are recognized (including the Stop key).

   - If the STS (status) LED is NOT flashing green, refer to Status Indicators on page 137or more information.
   - If any digital input is configured to "Stop - CF" (CF=Clear Faults) or "Enable", verify that signals are present or the drive will not start. See Table 1 on page 13 for other causes of a start inhibit.
5. When prompted on the HIM, select a display language and press Enter ( ).

   The **PowerFlex 700S Start-Up** screen displays for drives that have not been previously configured.

   TIP If the Assisted Start routine has already been accessed and started, you can return to and continue with the Start-Up routine. See Access the Start-Up Routine on page 153 for more information.

Start Up the Drive

6. Press Enter ( ) on the HIM.

   The Assisted Start routine will prompt you for the required information needed to start-up the drive and complete the autotuning procedures. See Figure 1 on page 12 for a flow chart of the Assisted Start routine.

   Note: When starting up some high impedance motor applications, the "Power Circuit Test" may fail. If this test fails, the HIM displays the following fault description text:

   - Power Circuit Diagnostic Test Detected Error: XX_XX no gate, open circuit, bad I sensor, press Enter.

   If this failure occurs, do the following:

   - Verify the connections between the motor and the drive; make sure that a disconnect device or contactor is not interfering with the signal.
   - Press Enter to continue and perform the Direction Test. If the Direction Test is successful, continue with the Start-Up routine - ignoring the failure. If the Direction Test fails, check for an open connection or bad current sensor.

7. When the Assisted Start routine is finished and **Done/Exit** displays on the HIM, press Enter ( ) to save any changed and/or updated data.

IMPORTANT Always exit the Assisted Start routine before cycling power to the drive.

Figure 1 - PowerFlex 700S Assisted Start Routine Flow Chart

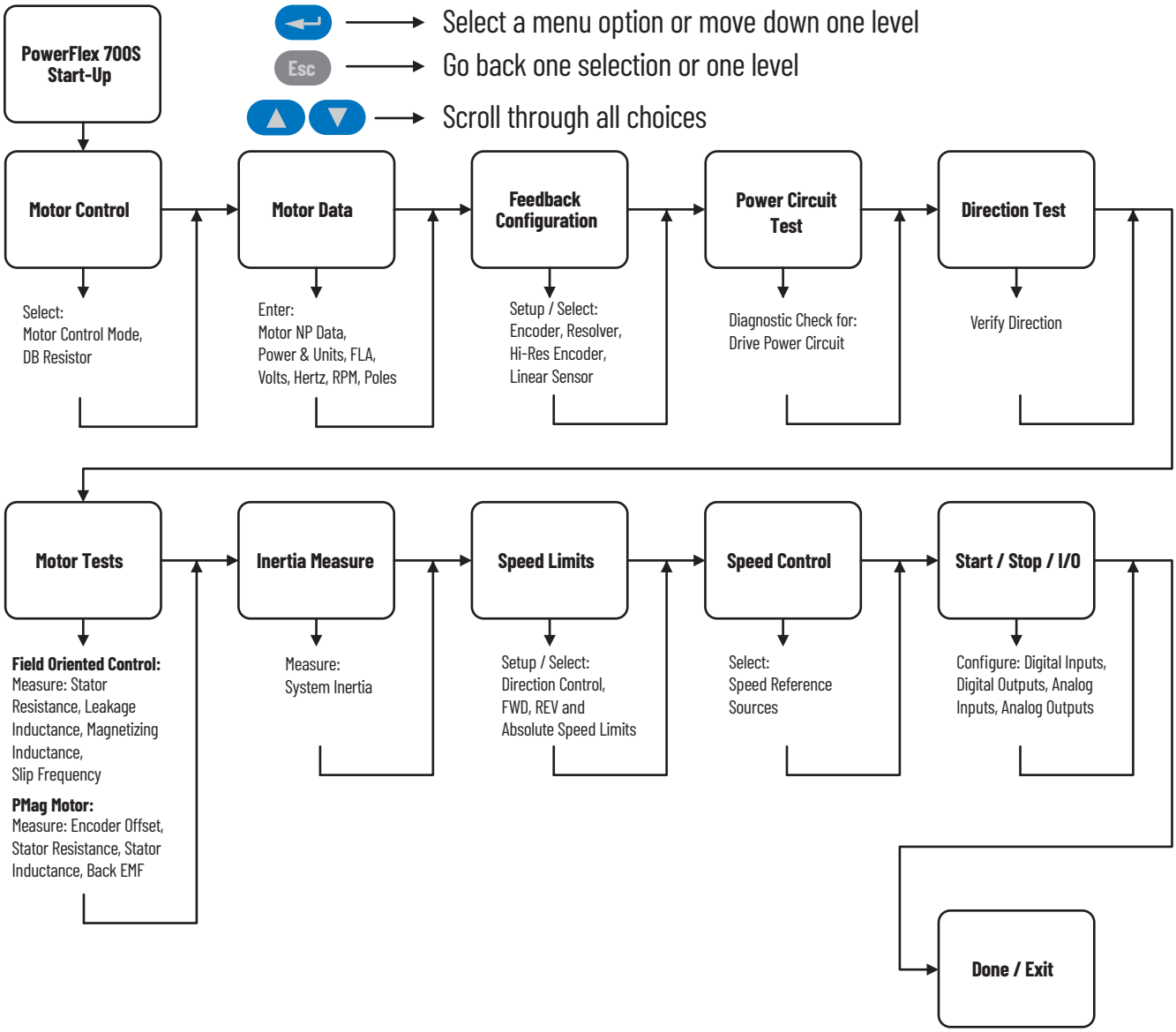

Table 1 - Common Causes of a Start Inhibit

Examine Parameter 156 [Start Inhibits]			
Bit	**Description**		**Action**
1	No power is present at the Enable Terminal; TB2-16		Apply the enable
2, 3, 4	A stop command is being issued		Close all stop inputs
5	Power loss event is in progress, indicating a loss of the AC input voltage		Restore AC power
6	Data supplied by the power structure EEprom is invalid or corrupt		Cycle the power - if problem persists, replace the power structure
7	Flash Update in Progress		Complete Flash Procedures
8	Drive is expecting a Start Edge and is receiving a continuous signal		Open all start buttons and remove all start commands
9	Drive is expecting a Jog Edge and is receiving a continuous signal		Open all jog buttons and remove all jog commands
10	A conflict exists between the Encoder PPR programming (Par 232 or 242) and the encoder configuration for edge counts (Par 233, bits 4 & 5)		Verify encoder data and reprogram
11	The drive cannot precharge because a precharge input is programmed and no signal is present		Reprogram the input or close the precharge control contact
12	Digital Configuration	Start input configured but stop not configured	Program Par 825…830 to include a stop button, rewire the drive
		Run input configured but control options do not match	Program Par 153, Bit 8 to “0” (2 wire control)
		Start input configured but control options do not match	Program Par 153, Bit 8 to “1” (3 wire control)
		Multiple inputs configured as Start or Run	Reprogram Par 825…830 so multiple starts, multiple runs or any combination do not exist
		Multiple inputs configured as Jog1	Reprogram Par 825…830 so only (1) is set to Jog1
		Multiple inputs configured as Jog2	Reprogram Par 825…830 so only (1) is set to Jog2
		Multiple inputs configured as Fwd/Rev	Reprogram Par 825…830 so only (1) is set to Fwd/Rev
14	Invalid Feedback Device for Permanent Magnet Motor Control		Set Par 222 to Value 5 (FB Opt Port0)

Notes:

Programming and Parameters

This chapter provides a complete listing of the PowerFlex® 700S Phase II drive parameters. The parameters can be programmed (viewed/edited) using a Human Interface Module (HIM). Refer to Human Interface Module Overview on page 151 for information on using the HIM to view and edit parameters. As an alternative, programming can also be performed using DriveTools™ software and a personal computer.

Firmware Compatibility

PowerFlex 700S firmware revision 6.xxx and earlier can only be used with control boards that were designed to operate with 6.xxx or earlier firmware, series A control boards. PowerFlex 700S firmware revision firmware 7.xxx and greater can only be used with control boards that were designed to operate with 7.xxx or greater, series B control boards.

Table 2 - Compatible Revisions

Control Board Version	Compatible Firmware Revisions
Series A	6.xxx and previous
Series B	7.xxx and later

If you attempt to download a firmware revision that is not compatible with the control board on the drive, a series of error messages appear. If these error messages appear, confirm the revision of the control board, and select a firmware revision download that is compatible with the control board version.

About Parameters

To configure a drive module to operate in a specific way, certain drive parameters may have to be configured appropriately. Three types of parameters exist:

- **ENUM Parameters**
  These parameters allow a selection from two or more items. The LCD HIM will display a text message for each item.
- **Bit Parameters**
  These parameters have individual bits associated with features or conditions. If the bit is 0, the feature is off or the condition is false. If the bit is 1, the feature is on or the condition is true.
- **Numeric Parameters**
  These parameters have a single numeric value, for example, “0.1 Volts”.

The example tables on the following page illustrate how each parameter type is presented in this manual.

Table 3 - Table Explanation

1	2	3				
No.	**Name** **Description**	**Values**		**Linkable**	**Read-Write**	**Data Type**
4	**Motor NP RPM** Set to the motor nameplate rated rpm.	Default: Min/Max: Units: Scale:	Calculated 1/30000 rpm Par 4 [Motor NP RPM] = 1.0 P.U.		RW	16-bit Integer
110	**Speed/TorqueMode** Selects the source for the drive torque reference.	Default: Options:	1 = "Speed Reg" 0 = "Zero Torque" 1 = "Speed Reg" 2 = "Torque Ref" 3 = "Min Spd/Torq" 4 = "Max Spd/Torq" 5 = "Sum Spd/Torq" 6 = "AbsMn Spd/Tq"			
151	**Logic Command** The controller-drive interface (as defined by the Controller Communication Format) sets bits to enable and disable various functions and algorithms. Bits that are changed here are reflected in Par 152 [Applied LogicCmd]. Note: Bits 4 through 9 in Logic Command are NOT recalled from Control EEprom. They will be cleared upon drive powerup or following an EEprom recall operation.					

Options	PI Trim Rst	PI Trim Hold	Position En	PI Trim En	Frict Comp	Inertia Comp	Ext Flt/Alm	Reserved	Reserved	SReg IntgRst	SReg IntgHld	SpdRamp Hold	Time Axis En	TachLoss Rst	Spd S Crv En	SpdRamp Dsbl
Default	0	0	0	0	0	0	0	0	0	0	0	0	0	0	0	0
Bit	15	14	13	12	11	10	9	8	7	6	5	4	3	2	1	0

0 = False
1 = True

Column(s)	Explanation		
1	**No.** - Parameter Number = Parameter value cannot be changed until the drive is stopped. A = Parameter is displayed on the HIM only when Par 196 [ParamAccessLvl] is set to 1 "Advanced".		
2	**Name** - Parameter name as it appears in the DriveExecutive software. **Description** - Brief description of parameter function.		
3	**Values** - Define the various operating characteristics of the parameter. There are 3 types of Values:		
	Numeric	Default:	Lists the value assigned at the factory.
		Min/Max.	Displays lowest possible setting/Displays highest possible setting.
		Units:	Unit of measure and resolution as shown on the LCD HIM. **Important:** Analog inputs can be set for current or voltage with parameter 821 [Analog I/O Units].
		Scale:	Value sent from Controller or Comm Device = Drive Parameter Value x Comm Scale
	ENUM	Default:	Lists the value assigned at the factory.
		Options:	Displays the selections available.
	Bit	Options:	Displays the bit selections available.
		Default:	Lists the value assigned at the factory.
		Bit:	Bit number.
	Linkable - "Y" indicates that the parameter is linkable.		
	Read-Write - Identifies if the parameter is read-write or read-only. RW = Read-Write RO = Read Only		
	Data Type - Identifies the parameter data type (i.e. integer, floating point, boolean).		

How Parameters are Organized

DriveExecutive™ programming software displays parameters in “Linear List” or “File - Group - Parameter” format. Viewing the parameters in “File - Group - Parameter” format simplifies programming by grouping parameters that are used for similar functions. There are twelve files. Each file is divided into multiple groups of parameters. Each illustration below contains a list of the Parameters contained in each Group for each File.

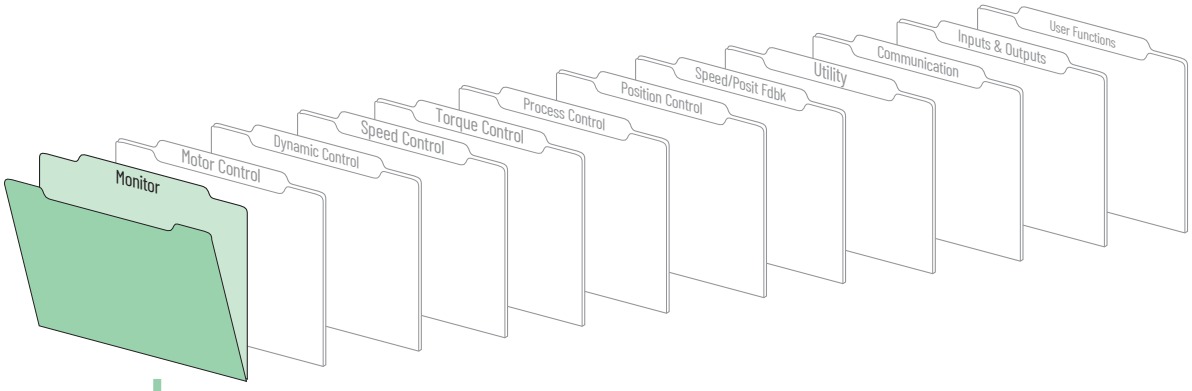

Metering	
310	Output Freq
49	Selected SpdRefA
50	Selected SpdRefB
40	Selected Spd Ref
43	Ramped Spd Ref
301	Motor Speed Ref
319	Selected Trq Ref
300	Motor Spd Fdbk
72	Scaled Spd Fdbk
297	Output Curr Disp
499	Trq CurFdbk (Iq)
309	% Motor Flux
312	MotorFluxCurr FB
307	Output Voltage
311	Output Power
762	Position Fdbk
299	Elapsed MWHrs
298	Elapsed Run Time
306	DC Bus Voltage
313	Heatsink Temp
345	Drive OL JnctTmp
824	Local I/O Status
801	Anlg In1 Value
807	Anlg In2 Value
813	Anlg In3 Volts
837	Anlg Out1 Value
844	Anlg Out2 Value

Control Status	
150	Logic State Mach
155	Logic Status
157	Logic Ctrl State
156	Start Inhibits
166	Motor Ctrl Cmmd
167	Motor Ctrl Ackn
555	MC Status
346	Drive OL Status
159	DigIn ConfigStat
165	Tune Test Status
317	SL System Time
554	LED Status

Drive Data	
400	Rated Amps
401	Rated Volts
420	Pwr Strct Mode
404	Dead Time
314	VPL Firmware Rev
315	VPL Build Number
455	LID Version Number
457	MC Firmware Rev
456	MC Build Number
900	SynchLink Rev
901	SL System Rev

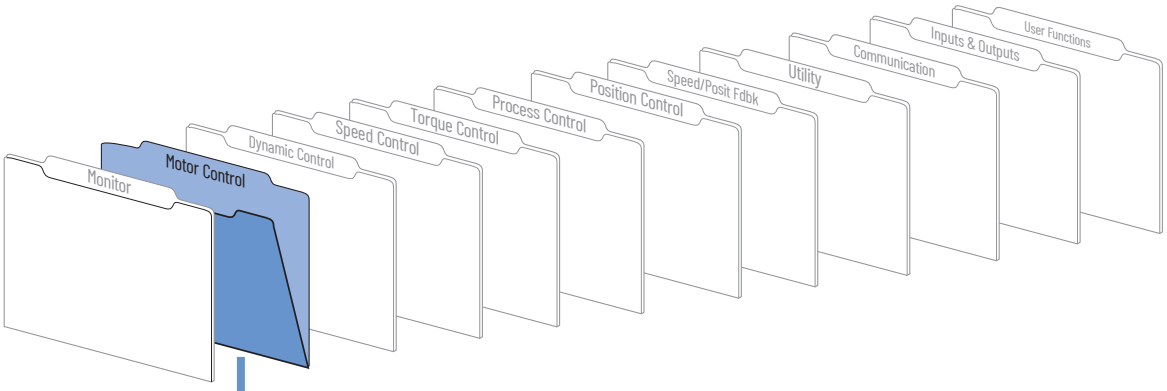

Motor Data	
1	Motor NP Volts
2	Motor NP FLA
3	Motor NP Hertz
4	Motor NP RPM
5	Motor NP Power
6	Mtr NP Pwr Units
336	Motor OL Factor
7	Motor Poles
9	Total Inertia

Monitoring	
525	Slip Ratio
526	Stator Frequency
434	Mtr Vds Base
435	Mtr Vqs Base
441	Vds Fdbk Filt
442	Vqs Fdbk Filt
497	Vqs Command
498	Vds Command
495	Iqs Command
496	Ids Command
499	Trq CurFdbk (Iq)
489	Flx CurFdbk (Id)

Drive Config	
485	Motor Ctrl Mode
402	PWM Frequency
403	Voltage Class
405	Dead Time Comp
409	Line Undervolts
410	PreChrg TimeOut
411	PreChrg Control
510	FVC Mode Config
511	FVC2 Mode Config
512	PMag Mode Cnfg
513	V/Hz Mode Config
514	Test Mode Config
515	FVC Tune Config
516	FVC2 Tune Config
517	PMag Tune Config
505	PM TestWait Time
506	PM Test Idc Ramp
507	PM Test FreqRamp
508	PM Test Freq Ref
509	PM Test I Ref
424	Flux Ratio Ref

Tuning	
423	Iqs Rate Limit
453	Iu Offset
454	Iw Offset
425	Flux Rate Limit
426	Flux Satur Coef
443	Flux Reg P Gain1
470	Flux Reg P Gain2
444	Flux Reg I Gain
533	SlewRateTimeLimit
500	Bus Util Limit
501	Torque En Dly
437	Vqs Max
438	Vds Max
439	Vqs Min
440	Vds Min
469	FVC CEMF Comp
449	SrLss Reg I Gain
450	SrLss Reg P Gain
447	Slip Reg P Gain
448	Slip Reg I Gain
446	Slip Gain Min
445	Slip Gain Max
552	Slip Preload Val
553	Slip Slew Rate
472	PreCharge Delay
431	Test Current Ref
432	Test Freq Ref
433	Test Freq Rate
477	Est Theta Delay
428	IReg IGain Fctr
537	SrLssAngleStblty
538	SrLss VoltStblty
539	SrLss StbltyFilt
54	Inertia TrqLpfBW
551	CurrFdbk AdjTime

Autotune Results	
421	Iqs Integ Freq
422	Iqs Reg P Gain
429	Ids Integ Freq
430	Ids Reg P Gain
486	Rated Slip Freq
487	Motor NTC Coef
488	Flux Current
490	StatorInductance
491	StatorResistance
492	Leak Inductance
493	Leak Indc Satur1
494	Leak Indc Satur2
502	Rotor Resistance
503	Current Reg BW
504	PM AbsEncd Offst
427	PM Mtr CEMF Comp
520	PM Q Inductance
521	PM D Inductance
522	PM Stator Resist
523	PM Mtr CEMF Coef

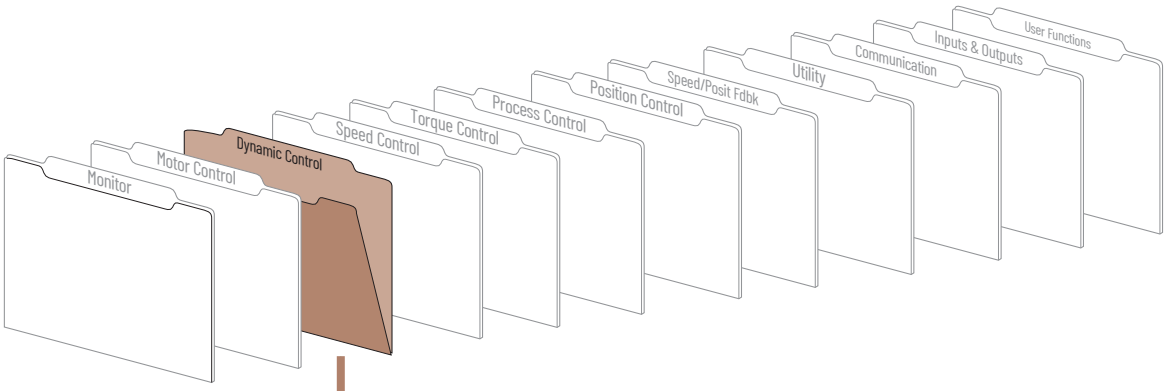

Configuration	
151	Logic Command
152	Applied LogicCmd
153	Control Options
158	Drive Logic Rslt
160	Zero Speed Lim
169	SrLss ZeroSpdLim
335	Abs OverSpd Lim

Overload Protect	
337	Mtr I2T Curr Min
338	Mtr I2T Spd Min
339	Mtr I2T Calibrat
340	Mtr I2T Trp ThrH
341	Mtr I2T Count
343	OL OpnLp CurrLim
344	OL ClsLp CurrLim

Stop/Brake Modes	
168	Normal Stop Mode
414	Brake/Bus Cnfg
415	BusReg/Brake Ref
416	Brake PulseWatts
417	Brake Watts
154	Stop Dwell Time
545	Bus Reg Ki
546	Bus Reg Kp
547	Bus Reg Kd
1125	DC Brake Level
544	External DB Res
1126	DC Brake Time

Power Loss	
406	Power Loss Mode
407	Power Loss Time
408	Power Loss Level

Sleep/Wake	
278	Sleep-Wake Mode
279	Sleep-Wake Ref
280	Wake Level
281	Wake Time
282	Sleep Level
283	Sleep Time
284	Sleep Control

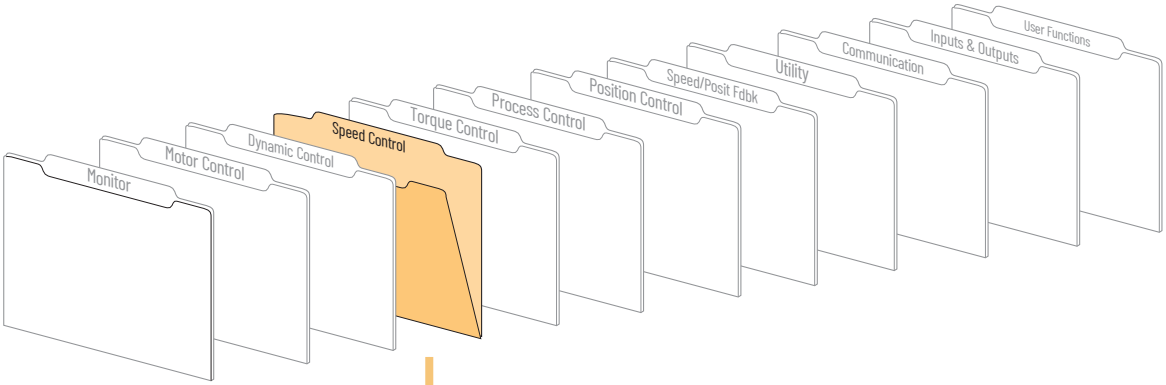

Reference	
27	Speed Ref A Sel
28	Speed Ref B Sel
10	Speed Ref 1
11	Spd Ref1 Divide
12	Speed Ref 2
13	Spd Ref2 Multi
14	Preset Speed 1
15	Preset Speed 2
16	Preset Speed 3
17	Preset Speed 4
18	Preset Speed 5
19	Preset Speed 6
20	Preset Speed 7
29	Jog Speed 1
39	Jog Speed 2
40	Selected Spd Ref
30	Min Spd Ref Lim
31	Max Spd Ref Lim
41	Limited Spd Ref
32	Accel Time 1
33	Decel Time 1
34	S Curve Time
43	Ramped Spd Ref
53	Drive Ramp Rslt
45	Delayed Spd Ref
61	Virt Encoder EPR
62	Virt Encdr Posit
63	Virt Encdr Dlyed
37	Spd Ref Bypass
35	SpdRef Filt Gain
36	SpdRef Filt BW
38	Speed Ref Scale
46	Scaled Spd Ref
21	Speed Trim 1
47	SpdRef + SpdTrm1
56	Inertia SpeedRef
9	Total Inertia
57	InertiaAccelGain
58	InertiaDecelGain
60	DeltaSpeedScale
55	Speed Comp
59	Inertia Trq Add
64	FricComp Spd Ref
65	FricComp Setup
1160	VirtEncPositFast
66	FricComp Stick
67	FricComp Slip
68	FricComp Rated
69	FricComp Trq Add

Regulator	
48	Spd Ref Bypass2
23	Speed Trim 3
24	SpdTrim 3 Scale
22	Speed Trim 2
25	STrim2 Filt Gain
26	SpdTrim2 Filt BW
74	Atune Spd Ref
75	Rev Speed Lim
76	Fwd Speed Lim
301	Motor Speed Ref
300	Motor Spd Fdbk
93	SRegFB Filt Gain
94	SReg FB Filt BW
71	Filtered SpdFdbk
100	Speed Error
89	Spd Err Filt BW
84	SpdReg AntiBckup
85	Servo Lock Gain
87	SReg Trq Preset
9	Total Inertia
90	Spd Reg BW
97	Act Spd Reg BW
91	Spd Reg Damping
81	Spd Reg P Gain
82	Spd Reg I Gain
92	SpdReg P Gain Mx
86	Spd Reg Droop
101	SpdReg Integ Out
106	SrLss Spd Reg BW
104	SrLss Spd Reg Kp
105	SrLss Spd Reg Ki
102	Spd Reg Pos Lim
103	Spd Reg Neg Lim
95	SRegOut FiltGain
96	SReg Out Filt BW
302	Spd Reg PI Out

Setpoint Monitor	
171	Set Speed Lim
172	Setpt 1 Data
173	Setpt1 TripPoint
174	Setpt 1 Limit
175	Setpt 2 Data
176	Setpt2 TripPoint
177	Setpt 2 Limit

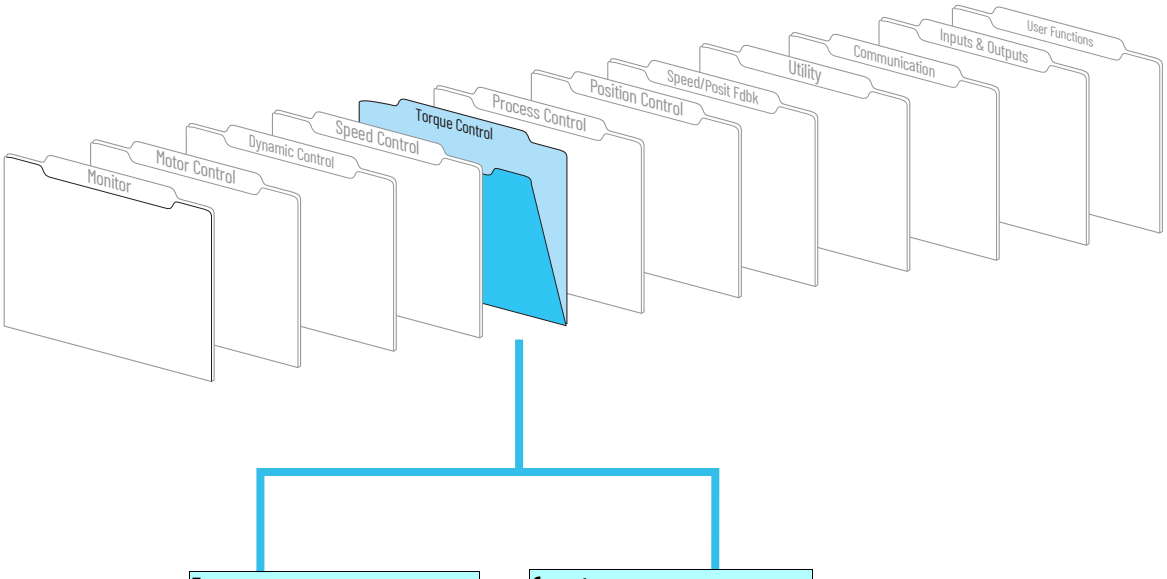

Torque	
110	Speed/TorqueMode
302	Spd Reg PI Out
59	Inertia Trq Add
69	FricComp Trq Add
111	Torque Ref 1
112	Torque Ref1 Div
113	Torque Ref 2
114	Torque Ref2 Mult
115	Torque Trim
119	SLAT ErrorSetpnt
120	SLAT Dwell Time
319	Selected Trq Ref
116	Torque Step
129	Atune Trq Ref
117	NotchAttenuation
118	Notch Filt Freq
415	BusReg/Brake Ref
401	Rated Volts
306	DC Bus Voltage
300	Motor Spd Fdbk
127	Mtring Power Lim
128	Regen Power Lim
353	Iq Actual Lim
125	Torque Pos Limit
126	Torque Neg Limit
123	Trq PosLim Actl
124	Trq NegLim Actl
303	Motor Torque Ref
132	Inert Adapt Sel
133	Inert Adapt BW
134	Inert Adapt Gain
221	Load Estimate

Current	
303	Motor Torque Ref
309	% Motor Flux
359	Motor Flux Est
360	Min Flux
361	Flx LpassFilt BW
350	Iq Actual Ref
351	Iq Ref Trim
308	Output Current
343	OL OpnLp CurrLim
356	Mtr Current Lim
362	Current Lmt Gain
363	Ki Current Limit
364	Kd Current Limit
352	Is Actual Lim
488	Flux Current
312	MotorFluxCurr FB
345	Drive OL JnctTmp
313	Heatsink Temp
346	Drive OL Status
344	OL ClsLp CurrLim
353	Iq Actual Lim
354	Iq Rate Limit
355	Iq Ref Limited
305	Mtr Trq Curr Ref

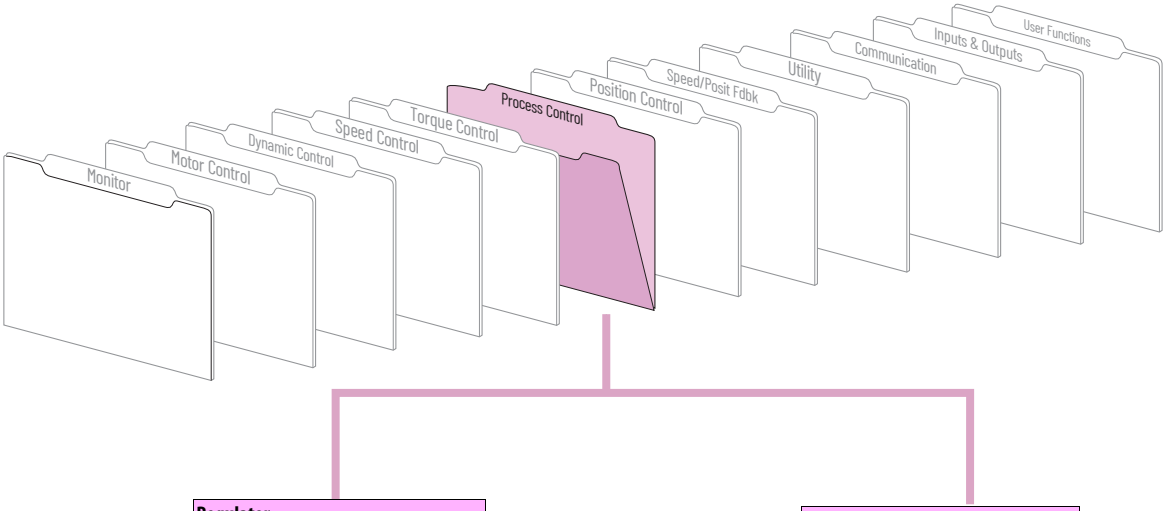

Regulator	
181	PI Reference
182	PI Feedback
184	PI Lpass Filt BW
183	PI Error
185	PI Preload
186	PI Prop Gain
187	PI Integ Time
188	PI Integ HLim
189	PI Integ LLim
190	PI Integ Output
191	PI High Limit
192	PI Lower Limit
180	PI Output

Limit Generator	
202	Time Axis Rate
203	Time Axis Output
204	LimGen Y axis Mx
205	LimGen Y axis Mn
206	LimGen X axis In
207	Limit Gen Hi Out
208	Limit Gen Lo Out

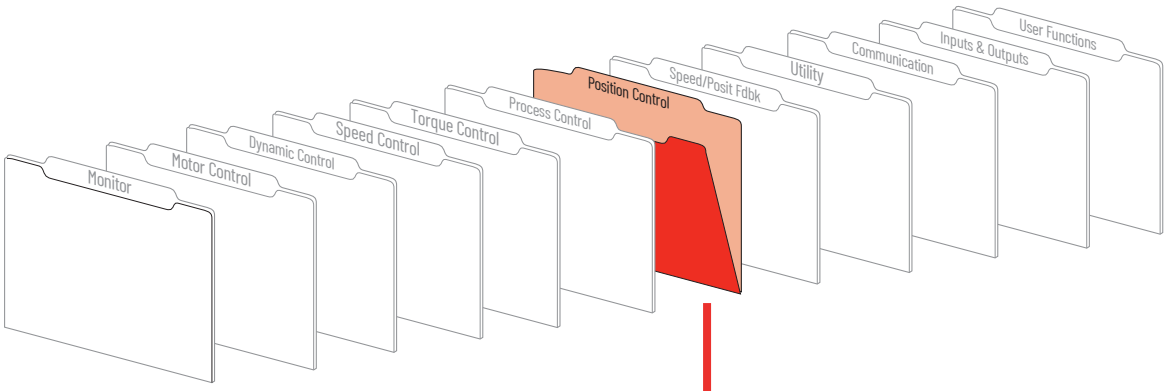

Position Config

740	Position Control
741	Position Status
742	Posit Ref Sel
777	PositionFdbk Sel
784	Posit Detct1 In
780	PositDetct1 Stpt
785	Posit Detct2 In
781	PositDetct2 Stpt
782	In Posit BW
783	In Posit Dwell

Interp / Direct

748	CoarsePosit Trgt
750	Coarse Spd Trgt
749	Interp Position
751	Interp Speed
752	Interp AccelRate
693	Interp SyncInput
743	Aux Posit Ref
745	PositRef EGR Mul
746	PositRef EGR Div
744	PositRef EGR Out
757	Abs Posit Offset
753	Posit Offset 1
754	Posit Offset 2
755	Posit Offset Spd
756	X Offst SpdFilt
747	Position Cmmd
762	Position Fdbk
764	Posit Load Fdbk
766	Posit FB EGR Mul
767	Posit FB EGR Div
763	Position Actual
765	Posit Actl Load
769	Position Error
796	Posit Gear Ratio
768	PositReg P Gain
770	PositReg Integ
772	XReg Integ LoLim
773	XReg Integ HiLim
774	XReg Integ Out
771	PositReg Droop
775	XReg Spd LoLim
776	XReg Spd HiLim
778	X Notch Attenu
779	X Notch FiltFreq
318	Posit Spd Output

Point to Point

758	Pt-Pt Posit Ref
745	PositRef EGR Mul
746	PositRef EGR Div
744	PositRef EGR Out
753	Posit Offset 1
754	Posit Offset 2
755	Posit Offset Spd
756	X Offst SpdFilt
747	Position Cmmd
757	Abs Posit Offset
762	Position Fdbk
763	Position Actual
769	Position Error
796	Posit Gear Ratio
768	PositReg P Gain
761	Pt-Pt Filt BW
759	Pt-Pt Accel Time
760	Pt-Pt Decel Time
775	XReg Spd LoLim
776	XReg Spd HiLim
778	X Notch Attenu
779	X Notch FiltFreq
318	Posit Spd Output
797	BasicIndx Step
798	BasicIndx Preset
799	BasicIndx Output
1130	PPMP Pos Command
1131	PPMP Pos Mul
1132	PPMP Pos Div
1133	PPMP Scaled Cmd
1134	PPMP Control
1135	PPMP Status
1136	PPMP Rev Spd Lim
1137	PPMP Fwd Spd Lim
1138	PPMP Over Ride
1139	PPMP Accel Time
1140	PPMP Decel Time
1141	PPMP SCurve Time
1142	PPMP Spd Output
1143	PPMP Pos Output
1144	PPMP Pos To Go

Sync Generator

786	Xsync Status
787	Xsync Gen Period
317	SL System Time
788	Xsync In 1
789	Xsync Out 1
790	Xsync In 2
791	Xsync Out 2
792	Xsync Out 2 Dly
793	Xsync In 3
794	Xsync Out 3
795	Xsync Out 3 Dly

Motion

684	MotnUpdatePeriod
685	Motn CoarseMulti
686	Motn Config
687	Motn Axis Status
688	Motn AxisControl
689	Motn Axis Resp
690	Motn Cnct Status
691	Motn EventStatus
692	Motn Event Ctrl
694	Motn Mx Pos Trvl
695	Motn Mx Neg Trvl
696	Motn PositErrTol
697	MotnPositLockTol
698	Motn Posit Cmmd
699	Motn Speed Cmmd
700	Motn Posit Sync
701	FdbkAxis FdbkSel
702	FdbkAxis FdbkVal
703	Motn TP Select
704	Motn TP Value
705	Motn RotaryCmmd
706	MotnUnwdTurnCmmd
707	SrvoAxis RotFdbk
708	SrvoAxisUnwdFdbk
709	FdbkAxis RotFdbk
710	FdbkAxisUnwdFdbk
711	MotnCnfgErrParam

Phase Lock Loop

720	PLL Control
721	PLL Position Ref
722	PLL BandWidth
723	PLL Rev Input
724	PLL Rev Output
725	PLL EPR Input
726	PLL EPR Output
727	PLL VirtEncdrRPM
728	PLL Ext Spd Ref
729	PLL Ext SpdScale
730	PLL LPFilter BW
731	PLL Posit Out
732	PLL Posit OutAdv
733	PLL FiltPositOut
734	PLL Speed Out
735	PLL SpeedOut Adv

Homing

1120	Home Accel Time
1121	Home Decel Time
1122	Home Speed
1124	Home Actual Pos
1123	Home Position

Note: The Position Control function is disabled by default. To enable the Position Control function, set Par 147 bit 16 to "1" enable.

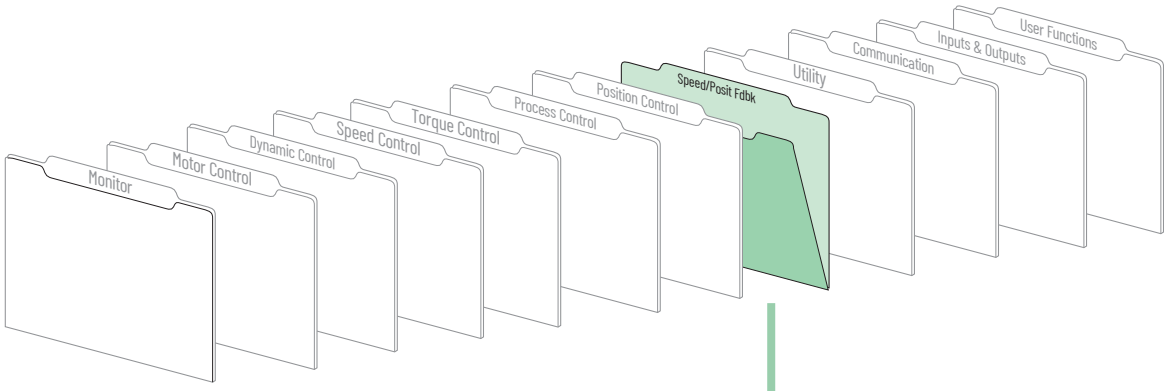

Feedback Config	
222	MtrFdbk Sel Pri
223	MtrFdbk Sel Alt
777	PositionFdbk Sel
224	TachSwitch Level
300	Motor Spd Fdbk
762	Position Fdbk
73	Spd Fdbk Scale
72	Scaled Spd Fdbk

Encoder Port 0/1	
233	Encdr 0/1 Config
234	Encdr 0/1 Error
232	Encoder0 PPR
231	Encdr0 Spd Fdbk
230	Encdr0 Position
242	Encoder1 PPR
241	Encdr1 Spd Fdbk
240	Encdr1 Position
236	Enc0/1 RegisCnfg
237	Enc0/1 RegisCtrl
238	Enc0/1 RegisStat
235	Encdr0 RegisLtch
239	Encdr1 RegisLtch

Calculated Fdbk	
225	Virtual Edge/Rev
226	Motor Speed Est
227	Motor Posit Est
228	MtrSpd Simulated
229	MtrPosit Simulat

Feedback Opt 0/1	
249	Fdbk Option ID
251	FB Opt0 Spd Fdbk
250	FB Opt0 Posit
253	FB Opt1 Spd Fdbk
252	FB Opt1 Posit
259	Stegmann0 Cnfg
260	Stegmann0 Status
263	Heidenhain0 Cnfg
264	Heidenhain0 Stat
265	Heidn Mkr Offset
266	Heidn Encdr Type
267	Heidn Encdr PPR
268	Resolver0 Cnfg
269	Resolver0 Status
277	Reslvr0 Type Sel
272	Reslvr0 SpdRatio
273	Reslvr0 Carrier
274	Reslvr0 In Volts
275	Rslvr0 XfrmRatio
276	Reslvr0 CableBal
254	Opt0/1 RegisCnfg
255	Opt0/1 RegisCtrl
256	Opt0/1 RegisStat
257	Opt 0 Regis Ltch
258	Opt 1 Regis Ltch
286	Linear1 Status
289	Lin1 Update Rate
290	Linear1 CPR
285	Linear1 Config
291	Lin1Stahl Status
1155	Heidn VM Pos Ref
1156	Heidn VM Enc PPR

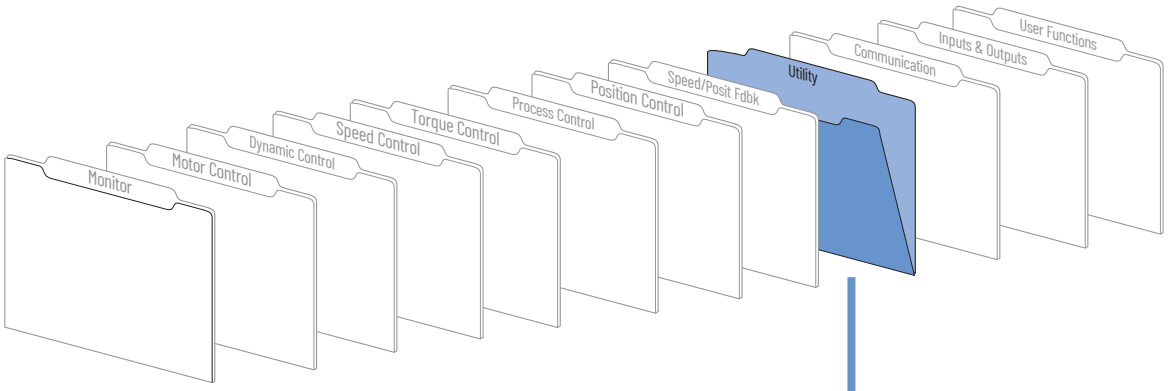

Drive Memory	
196	ParamAccessLevel
145	ApplicationGroup
147	FW Functions En
149	FW FunctionsActl
146	FW TaskTime Sel
148	FW TaskTime Actl

Diagnostics	
155	Logic Status
156	Start Inhibits
304	Limit Status
824	Local I/O Status
320	Exception Event1
321	Exception Event2
322	Exception Event3
326	Alarm Status 1
327	Alarm Status 2
328	Alarm Status 3
323	Fault Status 1
324	Fault Status 2
325	Fault Status 3
331	LstFaultStopMode
313	Heatsink Temp
345	Drive OL JnctTmp
346	Drive OL Status
316	SynchLink Status
902	SL Error Status
903	SL Error History
518	MC Diag Status
519	MC Diag Done
463	MC Diag Error 1
464	MC Diag Error 2
465	MC Diag Error 3
894	SL CRC Err Accum
895	SL CRC Error
896	SL BOF Err Accum
897	SL BOF Error
898	SL CRC Err Limit
899	SL BOF Err Limit
332	700L EventStatus*
333	700L FaultStatus*
334	700L AlarmStatus*

Fault/Alm Config	
379	Ext Flt/Alm Cnfg
374	Motor Stall Cnfg
373	Motor Stall Time
382	MC Cmd Lim Cnfg
381	PreChrg Err Cnfg
393	BusUndervoltCnfg
394	VoltFdbkLossCnfg
376	Inv OL Pend Cnfg
377	Inv OL Trip Cnfg
372	Mtr OL Pend Cnfg
371	Mtr OL Trip Cnfg
375	Inv OT Pend Cnfg
369	Brake OL Cnfg
365	Fdbk LsCnfg Pri
366	Fdbk LsCnfg Alt
367	Fdbk LsCnfgPosit
391	DPI CommLoss Cfg
392	NetLoss DPI Cnfg
383	SL CommLoss Data
384	SL CommLoss Cnfg
390	SL MultErr Cnfg
385	Lgx CommLossData
386	Lgx OutOfRunCnfg
387	Lgx Timeout Cnfg
388	Lgx Closed Cnfg
389	Lgx LinkChngCnfg
370	HiHp InPhsLs Cfg
378	Interp Flt Cnfg
395	+Sft OvrTrvlCnfg
396	-Sft OvrTrvlCnfg
397	+Hrd OvrTrvlCnfg
398	-Hrd OvrTrvlCnfg
399	Position ErrCnfg
368	Cnv NotLogin Cfg*

Test Points	
161	Logic TP Sel
162	Logic TP Data
163	Stop Oper TP Sel
164	StopOper TP Data
329	Fault TP Sel
330	Fault TP Data
77	Spd Ref TP Sel
78	Spd Ref TP RPM
79	Spd Ref TP Data
108	Spd Reg TP Sel
109	Spd Reg TP Data
347	Drive OL TP Sel
348	Drive OL TP Data
130	Trq Ref TP Sel
131	Trq Ref TP Data
357	Curr Ref TP Sel
358	Curr Ref TP Data
418	Brake TP Sel
419	Brake TP Data
178	PI TP Sel
179	PI TP Data
737	Posit TP Select
738	PositTP DataDInt
739	PositTP DataReal
892	SL Comm TP Sel
893	SL Comm TP Data
245	Spd Fdbk TP Sel
246	Spd Fdbk TP RPM
247	Spd Fdbk TP Data
261	Steg&Hiedn TPSel
262	Steg&Heidn TPDta
270	Reslvr0 TP Sel
271	Reslvr0 TP Data
287	Linear1 TP Sel
288	Linear1 TP Data
412	Power EE TP Sel
413	Power EE TP Data
466	MC TP1 Select
467	MC TP1 Value
468	MC TP1 Bit
473	MC TP2 Select
474	MC TP2 Value
475	MC FaultTPSelect
476	MC FaultTP Value
717	PLL TP Select
718	PLL TP DataDInt
719	PLL TP DataReal
1145	PPMP TP Select
1146	PPMP TP DataDInt
1147	PPMP TP DataReal
1168	MC TP3 Select
1169	MC TP3 Value

Peak Detection	
210	PeakDtct Ctrl In
211	PeakDtct Status
212	PkDtct1 In DInt
213	PkDtct1 In Real
214	PeakDtct1 Preset
215	PeakDetect1 Out
216	PkDtct2 In DInt
217	PkDtct2 In Real
218	PeakDtct2 Preset
219	PeakDetect2 Out

Trending	
556	Trend Control
557	Trend Status
558	Trend State
559	Trend Rate
560	Trend TrigA DInt
561	Trend TrigA Real
562	Trend TrigB DInt
563	Trend TrigB Real
564	Trend Trig Data
565	Trend Trig Bit
566	Trend PreSamples
567	Trend Mark DInt
568	Trend Mark Real
569	TrendBuffPointer
570	Trend In1 DInt
571	Trend In1 Real
572	Trend Out1 DInt
573	Trend Out1 Real
574	Trend In2 DInt
575	Trend In2 Real
576	Trend Out2 DInt
577	Trend Out2 Real
578	Trend In3 DInt
579	Trend In3 Real
580	Trend Out3 DInt
581	Trend Out3 Real
582	Trend In4 DInt
583	Trend In4 Real
584	Trend Out4 DInt
585	Trend Out4 Real

*__Note__: This parameter is used by PowerFlex 700L drives only.

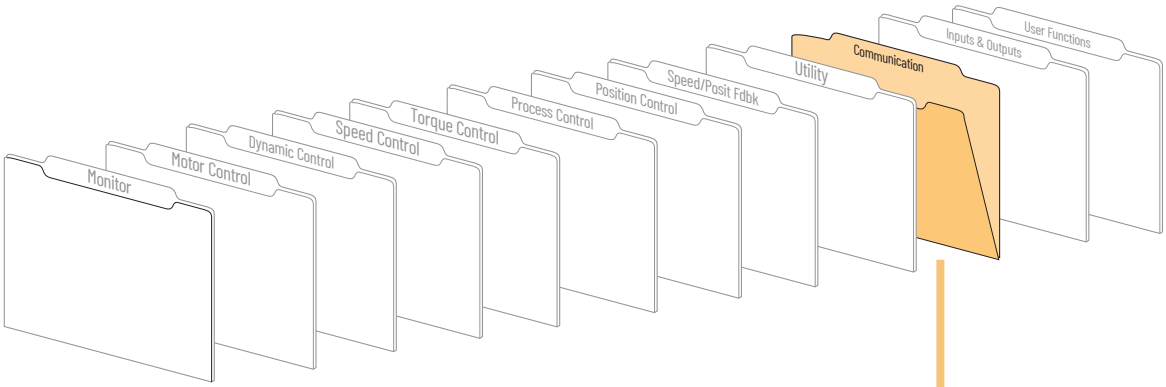

Masks & Owners	
670	Logic Mask
671	Start Mask
672	Jog Mask
673	Direction Mask
674	Fault Clr Mask
677	Stop Owner
678	Start Owner
679	Jog Owner
680	Direction Owner
681	Fault Clr Owner

DPI Data Links	
650	DPI In DataType
651	DPI Data In A1
652	DPI Data In A2
653	DPI Data In B1
654	DPI Data In B2
655	DPI Data In C1
656	DPI Data In C2
657	DPI Data In D1
658	DPI Data In D2
659	DPI Out DataType
660	DPI Data Out A1
661	DPI Data Out A2
662	DPI Data Out B1
663	DPI Data Out B2
664	DPI Data Out C1
665	DPI Data Out C2
666	DPI Data Out D1
667	DPI Data Out D2

DriveLogix I/O	
600	Lgx Comm Format
601	From DL DataType
602	FromDriveLogix00
603	FromDriveLogix01
604	FromDriveLogix02
605	FromDriveLogix03
606	FromDriveLogix04
607	FromDriveLogix05
608	FromDriveLogix06
609	FromDriveLogix07
610	FromDriveLogix08
611	FromDriveLogix09
612	FromDriveLogix10
613	FromDriveLogix11
614	FromDriveLogix12
615	FromDriveLogix13
616	FromDriveLogix14
617	FromDriveLogix15
618	FromDriveLogix16
619	FromDriveLogix17
620	FromDriveLogix18
621	FromDriveLogix19
622	FromDriveLogix20
625	To DL DataType
626	To DriveLogix00
627	To DriveLogix01
628	To DriveLogix02
629	To DriveLogix03
630	To DriveLogix04
631	To DriveLogix05
632	To DriveLogix06
633	To DriveLogix07
634	To DriveLogix08
635	To DriveLogix09
636	To DriveLogix10
637	To DriveLogix11
638	To DriveLogix12
639	To DriveLogix13
640	To DriveLogix14
641	To DriveLogix15
642	To DriveLogix16
643	To DriveLogix17
644	To DriveLogix18
645	To DriveLogix19
646	To DriveLogix20

SynchLink Input	
928	Rx Dir Data Type
929	SL Dir Data Rx00
930	SL Dir Data Rx01
931	SL Dir Data Rx02
932	SL Dir Data Rx03
933	Rx Buf Data Type
934	SL Buf Data Rx00
935	SL Buf Data Rx01
936	SL Buf Data Rx02
937	SL Buf Data Rx03
938	SL Buf Data Rx04
939	SL Buf Data Rx05
940	SL Buf Data Rx06
941	SL Buf Data Rx07
942	SL Buf Data Rx08
943	SL Buf Data Rx09
944	SL Buf Data Rx10
945	SL Buf Data Rx11
946	SL Buf Data Rx12
947	SL Buf Data Rx13
948	SL Buf Data Rx14
949	SL Buf Data Rx15
950	SL Buf Data Rx16
951	SL Buf Data Rx17

SynchLink Config	
904	SL Node Cnfg
905	SL Rx CommFormat
906	SL Rx DirectSel0
907	SL Rx DirectSel1
908	SL Rx DirectSel2
909	SL Rx DirectSel3
910	SL Tx CommFormat
911	SL Tx DirectSel0
912	SL Tx DirectSel1
913	SL Tx DirectSel2
914	SL Tx DirectSel3
915	SL Rcv Events
916	SL Clr Events
917	SL Rx P0 Regis
918	SL Rx P1 Regis
921	SL Real2DInt In
922	SL Real2DInt Out
923	SL Mult Base
924	SL Mult A In
925	SL Mult B In
926	SL Mult Out
927	SL Mult State

SynchLink Output	
964	Tx Dir Data Type
965	SL Dir Data Tx00
966	SL Dir Data Tx01
967	SL Dir Data Tx02
968	SL Dir Data Tx03
969	Tx Buf Data Type
970	SL Buf Data Tx00
971	SL Buf Data Tx01
972	SL Buf Data Tx02
973	SL Buf Data Tx03
974	SL Buf Data Tx04
975	SL Buf Data Tx05
976	SL Buf Data Tx06
977	SL Buf Data Tx07
978	SL Buf Data Tx08
979	SL Buf Data Tx09
980	SL Buf Data Tx10
981	SL Buf Data Tx11
982	SL Buf Data Tx12
983	SL Buf Data Tx13
984	SL Buf Data Tx14
985	SL Buf Data Tx15
986	SL Buf Data Tx16
987	SL Buf Data Tx17

Security	
714	Port Mask Act
669	Write Mask
712	Write Mask Act
670	Logic Mask
713	Logic Mask Act

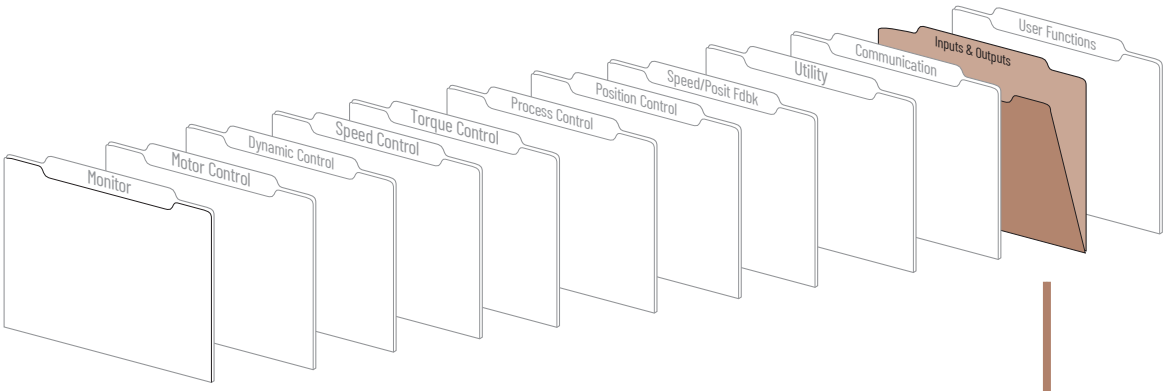

Analog Inputs	
821	Analog I/O Units
803	AnIg In1 Offset
801	AnIg In1 Value
802	AnIg In1 Scale
804	AI 1 Filt Gain
805	AnIg In1 Filt BW
800	AnIg In1 Data
1093	AnIg In1LossCnfg
809	AnIg In2 Offset
807	AnIg In2 Value
808	AnIg In2 Scale
810	AI 2 Filt Gain
811	AnIg In2 Filt BW
806	AnIg In2 Data
1094	AnIg In2LossCnfg
815	AnIg In3 Offset
813	AnIg In3 Value
814	AnIg In3 Scale
816	AI 3 Filt Gain
817	AnIg In3 Filt BW
812	AnIg In3 Data
1095	AnIg In3LossCnfg

Analog Outputs	
821	Analog I/O Units
831	AnIg Out1 Sel
832	AnIg Out1 DInt
833	AnIg Out1 Real
834	AnIg Out1 Offset
835	AnIg Out1 Scale
836	AnIg Out1 Zero
837	AnIg Out1 Value
838	AnIg Out2 Sel
839	AnIg Out2 DInt
840	AnIg Out2 Real
841	AnIg Out2 Offset
842	AnIg Out2 Scale
843	AnIg Out2 Zero
844	AnIg Out2 Value

Digital Inputs	
823	DigIn Debounce
825	Dig In1 Sel
826	Dig In2 Sel
827	Dig In3 Sel
828	Dig In4 Sel
829	Dig In5 Sel
830	Dig In6 Sel
824	Local I/O Status

Digital Outputs	
845	Dig Out1 Sel
846	Dig Out1 Data
847	Dig Out1 Bit
848	Dig Out1 On Time
849	Dig Out1 OffTime
850	Dig Out2 Sel
851	Dig Out2 Data
852	Dig Out2 Bit
853	Dig Out2 On Time
854	Dig Out2 OffTime
855	Rly Out3 Sel
856	Rly Out3 Data
857	Rly Out3 Bit
858	Rly Out3 On Time
859	Rly Out3 OffTime
824	Local I/O Status

BitSwap Control	
860	BitSwap 1A Data
861	BitSwap 1A Bit
862	BitSwap 1B Data
863	BitSwap 1B Bit
864	BitSwap 1 Result
865	BitSwap 2A Data
866	BitSwap 2A Bit
867	BitSwap 2B Data
868	BitSwap 2B Bit
869	BitSwap 2 Result
870	BitSwap 3A Data
871	BitSwap 3A Bit
872	BitSwap 3B Data
873	BitSwap 3B Bit
874	BitSwap 3 Result
875	BitSwap 4A Data
876	BitSwap 4A Bit
877	BitSwap 4B Data
878	BitSwap 4B Bit
879	BitSwap 4 Result
880	BitSwap 5A Data
881	BitSwap 5A Bit
882	BitSwap 5B Data
883	BitSwap 5B Bit
884	BitSwap 5 Result
885	BitSwap 6A Data
886	BitSwap 6A Bit
887	BitSwap 6B Data
888	BitSwap 6B Bit
889	BitSwap 6 Result

[1] The calculation is based on the drive frame size and input voltage.

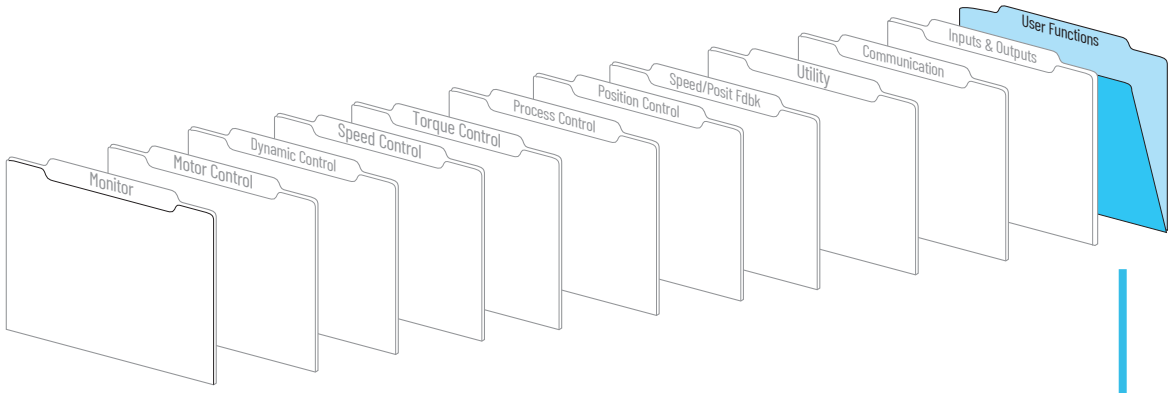

Param & Config

1000	UserFunct Enable
1001	UserFunct Actual
1002	UserData DInt 01
1003	UserData DInt 02
1004	UserData DInt 03
1005	UserData DInt 04
1006	UserData DInt 05
1007	UserData DInt 06
1008	UserData DInt 07
1009	UserData DInt 08
1010	UserData DInt 09
1011	UserData DInt 10
1012	UserData Real 01
1013	UserData Real 02
1014	UserData Real 03
1015	UserData Real 04
1016	UserData Real 05
1017	UserData Real 06
1018	UserData Real 07
1019	UserData Real 08
1020	UserData Real 09
1021	UserData Real 10

Select Switches

1022	Sel Switch Ctrl
1023	Swtch Real 1 NC
1024	Swtch Real 1 NO
1025	Swtch Real 1 Out
1026	Swtch DInt 1 NC
1027	Swtch DInt 1 NO
1028	Swtch DInt 1 Out
1029	Sel Swtch In00
1030	Sel Swtch In01
1031	Sel Swtch In02
1032	Sel Swtch In03
1033	Sel Swtch In04
1034	Sel Swtch In05
1035	Sel Swtch In06
1036	Sel Swtch In07
1037	Sel Swtch In08
1038	Sel Swtch In09
1039	Sel Swtch In10
1040	Sel Swtch In11
1041	Sel Swtch In12
1042	Sel Swtch In13
1043	Sel Swtch In14
1044	Sel Swtch In15
1045	SelSwtch RealOut
1046	SelSwtch DIntOut

Math & Logic

1047	DInt2Real1 In
1048	DInt2Real1 Scale
1049	DInt2Real1Result
1150	DInt2Real2 In
1151	DInt2Real2 Scale
1152	DInt2Real2Result
1050	Real2DInt In
1051	Real2DInt Scale
1052	Real2DInt Result
1053	MulDiv 1 Input
1054	MulDiv 1 Mul
1055	MulDiv 1 Div
1056	MulDiv 1 Result
1057	MulDiv 2 Input
1058	MulDiv 2 Mul
1059	MulDiv 2 Div
1060	MulDiv 2 Result
1061	Logic Config
1062	Logic/Cmpr State
1063	Logic 1A Data
1064	Logic 1A Bit
1065	Logic 1B Data
1066	Logic 1B Bit
1067	Logic 2A Data
1068	Logic 2A Bit
1069	Logic 2B Data
1070	Logic 2B Bit
1071	Compare 1A
1072	Compare 1B
1073	Compare 2A
1074	Compare 2B
1096	AddSub 1 Input
1097	AddSub 1 Add
1098	AddSub 1 Subtrct
1099	AddSub 1 Result
1100	AddSub 2 Input
1101	AddSub 2 Add
1102	AddSub 2 Subtrct
1103	AddSub 2 Result
1104	AddSub 3 Input
1105	AddSub 3 Add
1106	AddSub 3 Subtrct
1107	AddSub 3 Result

Timers

1108	DelTmr1 TrigData
1109	DelTmr1 Trig Bit
1110	DelayTimer1PrSet
1111	DelayTimer1Accu
1112	DelayTimer1Stats
1113	DelTmr2 TrigData
1114	DelTmr2 Trig Bit
1115	DelayTimer2PrSet
1116	DelayTimer2Accu
1117	DelayTimer2Stats

Electronic Gear Ratio

1161	EGR Config
1162	EGR Mul
1163	EGR Div
1164	EGR Pos Input
1165	EGR Pos Output
1166	EGR Pos Preset

Parameter Data in Linear List Format

No.	Name Description	Values		Linkable	Read-Write	Data Type
1	**Motor NP Volts** Set to the motor nameplate rated volts.	Default: Min/Max: Units:	Calculated (1) 75/705 V		RW	16-bit Integer
2	**Motor NP FLA** Set to the motor nameplate rated full load amps. Range limited by three-second inverter rating.	Default: Min/Max: Units:	Calculated (1) Calculated/Calculated A		RW	Real
3	**Motor NP Hertz** Set to the motor nameplate rated frequency.	Default: Min/Max: Units:	Calculated (1) 2.0000/500.0000 Hz		RW	Real
4	**Motor NP RPM** Set to the motor nameplate rated rpm.	Default: Min/Max: Units:	Calculated (1) 1/30000 rpm		RW	16-bit Integer
5	**Motor NP Power** Set to the motor nameplate rated power. Note: The unit of measure for this parameter was changed from kW to Hp for firmware version 2.003.	Default: Min/Max: Units:	Calculated (1) 0.2500/3500.0000 Hp		RW	32-bit Integer
6	**Mtr NP Pwr Units** The power units shown on the motor nameplate.	Default: Options:	0 = "Hp" 0 = "Hp" 1 = "kW"			
7	**Motor Poles** Set the number of motor poles indicated on the motor nameplate or manufacturer's motor data sheet. Only even numbers of poles are allowed. Calculation: (120 x NP Hz) / NP rpm = Poles [round down] Note: The maximum value was changed from 60 to 128 for firmware version 4.002.	Default: Min/Max: Units:	4 2/128 Pole		RW	16-bit Integer
9	**Total Inertia** Time, in seconds, for a motor coupled to a load to accelerate from zero to base speed, at rated motor torque. Calculated during auto-tune.	Default: Min/Max: Units:	2.0000 0.0100/655.0000 s	Y	RW	Real
10	**Speed Ref 1** Sets the speed reference that the drive should use when selected by Par 27 [Speed Ref A Sel] or Par 28 [Speed Ref B Sel]. A value of 1.0 represents base speed of the motor.	Default: Min/Max:	0.0000 -/+2200000000.0000	Y	RW	Real
11	**Spd Ref1 Divide** Par 10 [Speed Ref 1] is divided by this number. This number can be used to scale the value of Par 10 [Speed Ref 1].	Default: Min/Max:	1.0000 -/+2200000000.0000	Y	RW	Real
12	**Speed Ref 2** Sets the speed reference that the drive should use when selected by Par 27 [Speed Ref A Sel] or Par 28 [Speed Ref B Sel]. A value of 1.0 represents base speed of the motor.	Default: Min/Max:	0.0000 -/+2200000000.0000	Y	RW	Real
13	**Spd Ref2 Multi** Par 12 [Speed Ref 2] is multiplied by this number. This number can be used to scale the value of Par 12 [Speed Ref 2].	Default: Min/Max:	1.0000 -/+2200000000.0000	Y	RW	Real
14 through 20	**Preset Speed 1** through **Preset Speed 7** Provides an internal fixed speed command value. The preset speeds may be selected with Par 27 [Speed Ref A Sel] or Par 28 [Speed Ref B Sel].	Default: Min/Max: Units: Scale:	0.0000 -/+8.0000 P.U. rpm Par 4 [Motor NP RPM] = 1.0 P.U.	Y	RW	Real
21	**Speed Trim 1** Provides an additive trim value to Par 38 [Speed Ref Scale].	Default: Min/Max: Units: Scale:	0.0000 -/+14112.0000 rpm Par 4 [Motor NP RPM] = 1.0 P.U.	Y	RW	Real
22	**Speed Trim 2** Provides an additive speed trim value to Par 47 [SpdRef + SpdTrm1] with a Lead/Lag filter. The Position regulator output is linked to this parameter by default. This speed trim value affects the speed reference input to the speed regulator.	Default: Min/Max: Units: Scale:	0.0000 -/+14112.0000 rpm Par 4 [Motor NP RPM] = 1.0 P.U.	Y	RW	Real
23	**Speed Trim 3** Provides a scalable speed trim value that will be added to Par 47 [SpdRef + SpdTrm1]. Par 24 [SpdTrim 3 Scale] scales this value prior to the trim value affecting the speed reference.	Default: Min/Max: Units: Scale:	0.0000 -/+14112.0000 rpm Par 4 [Motor NP RPM] = 1.0 P.U.	Y	RW	Real
24	**SpdTrim 3 Scale** Par 23 [Speed Trim 3] is multiplied by this number. This number can be used to scale the value of Par 23 [Speed Trim 3].	Default: Min/Max:	1.0000 -/+1000.0000	Y	RW	Real
25	**STrim2 Filt Gain** Sets the lead term for the Par 22 [Speed Trim 2] filter. Values greater than 1 will result in a lead function and value less than 1 will result in a lag function. A value of 1 will disable the filter.	Default: Min/Max:	1.0000 -/+15.0000	Y	RW	Real

(1) The calculation is based on the drive frame size and input voltage.

No.	Name Description	Values		Linkable	Read-Write	Data Type
26	**SpdTrim2 Filt BW** Sets the frequency for the Speed Trim 2 filter.	Default: Min/Max: Units:	200.0000 0.0000/1000.0000 rad/s	Y	RW	Real
27 28	**Speed Ref A Sel** **Speed Ref B Sel** Selects the speed reference source for the drive. The selected speed reference values converge in the final selection of the drives speed reference with Par 152 [Applied LogicCmd] and are selected with bits 28, 29, 30. See the Block Diagrams beginning on page 171 for a description.	Default A: Default B: Options:	1 = "Spd Ref 1" 5 = "Preset Spd 1" 0 = "Zero Speed" 1 = "Speed Ref 1" 2 = "Speed Ref 2" 3 = "Sum Sref 1+2" 4 = "MOP Level" 5 = "Preset Spd 1" 6 = "Preset Spd 2" 7 = "Preset Spd 3 8 = "Preset Spd 4" 9 = "Preset Spd 5" 10 = "Preset Spd 6" 11 = "Preset Spd 7" 12 = "DPI Port 1" 13 = "DPI Port 2" 14 = "DPI Port 3" 15 = "Reserved" 16 = "DPI Port 5"			
29	**Jog Speed 1** Sets the speed reference that the drive should use when responding to bit 18 [Jog 1] of Par 152 [Applied LogicCmd].	Default: Min/Max: Units: Scale:	0.0000 -/+8.0000 P.U. rpm Par 4 [Motor NP RPM] = 1.0 P.U.	Y	RW	Real
30	**Min Spd Ref Lim** Sets the minimum speed reference limit. This value may be negative or positive but not greater than Par 31 [Max Spd Ref Lim].	Default: Min/Max: Units: Scale:	0.0000 -8.0000/Par 31 [Max Spd Ref Lim] rpm Par 4 [Motor NP RPM] = 1.0 P.U.		RW	Real
31	**Max Spd Ref Lim** Sets the maximum speed reference limit. This value may be negative or positive but not less than Par 30 [Min Spd Ref Lim].	Default: Min/Max: Units: Scale:	0.0000 Par 30 [Min Spd Ref Lim]/8.0000 rpm Par 4 [Motor NP RPM] = 1.0 P.U.		RW	Real
32	**Accel Time 1** Sets the rate of acceleration for all speed increases, with time in seconds to base speed. Accel Rate = Par 4 [Motor NP RPM] / Par 32 [Accel Time]	Default: Min/Max: Units:	10.0000 0.0100/6553.5000 s	Y	RW	Real
33	**Decel Time 1** Sets the rate of deceleration for all speed decreases, with time in seconds to base speed. Decel Rate = Par 4 [Motor NP RPM] / Par 33 [Decel Time]	Default: Min/Max: Units:	10.0000 0.0100/6553.5000 s	Y	RW	Real
34	**S Curve Time** Sets the S time (Round In and Round Out) in seconds. Half of the time specified is added to the beginning and half to the end of the applied ramp. The S time is independent of speed and results in a trapezoidal torque profile. For example: 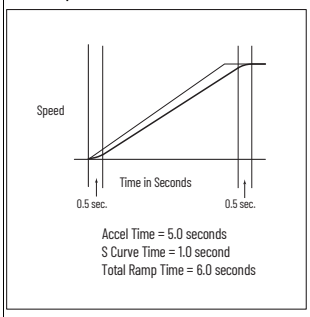 	Default: Min/Max: Units:	0.5000 0.0000/4.0000 s	Y	RW	Real
35	**SpdRef Filt Gain** Sets the lead term for the Speed Reference filter. Values greater than 1 will result in a lead function and values less than 1 will result in a lag function. A value of 1 will disable the filter.	Default: Min/Max:	1.0000 -/+5.0000	Y	RW	Real
36	**SpdRef Filt BW** Sets the frequency for the Speed Reference filter.	Default: Min/Max: Units:	0.0000 0.0000/500.0000 rad/s	Y	RW	Real
37	**Spd Ref Bypass** The speed command after the limit, ramp and s-curve blocks. Link a source directly to this parameter to bypass these blocks.	Default: Min/Max: Units: Scale:	0.0000 -/+14112.0000 rpm Par 4 [Motor NP RPM] = 1.0 P.U.	Y	RW	Real
38	**Speed Ref Scale** This parameter is multiplied with the value in Par 37 [Spd Ref Bypass].	Default: Min/Max:	1.0000 -/+1000.0000	Y	RW	Real
39	**Jog Speed 2** Sets the speed reference that the drive should use when responding to bit 23 [Jog 2] of Par 152 [Applied LogicCmd].	Default: Min/Max: Units: Scale:	0.0000 -/+8.0000 P.U. rpm Par 4 [Motor NP RPM] = 1.0 P.U.	Y	RW	Real

No.	Name Description	Values		Linkable	Read-Write	Data Type
40	**Selected Spd Ref** Displays the speed command before the speed reference limit block.	Default: Min/Max: Units: Scale:	0.0000 -/+8.0000 P.U. rpm Par 4 [Motor NP RPM] = 1.0 P.U.		RO	Real
41	**Limited Spd Ref** Displays the speed command after the limit block, limited by Par 30 [Min Spd Ref Lim] and Par 31 [Max Spd Ref Lim].	Default: Min/Max: Units: Scale:	0.0000 -/+8.0000 P.U. rpm Par 4 [Motor NP RPM] = 1.0 P.U.		RO	Real
42 A	**Jerk** Allows you to adjust the amount of S-Curve or "Jerk" applied to the Accel/Decel rate. Note: This parameter was added for firmware version 2.003.	Default: Min/Max:	900 2/30000		RW	16-bit Integer
43	**Ramped Spd Ref** Displays the speed command after the ramp block, modified by Par 32 [Accel Time 1], Par 33 [Decel Time 1] and Par 34 [S Curve Time].	Default: Min/Max: Units: Scale:	0.0000 -/+8.0000 P.U. rpm Par 4 [Motor NP RPM] = 1.0 P.U.		RO	Real
45	**Delayed Spd Ref** One sample period delayed output of Par 43 [Ramped Spd Ref]. Used in some applications to synchronize the speed reference value through SynchLink. This master drive Par 43 [Ramped Spd Ref] would then be transmitted to the slave drives over SynchLink.	Default: Min/Max: Units: Scale:	0.0000 -/+14112.0000 rpm Par 4 [Motor NP RPM] = 1.0 P.U.		RO	Real
46	**Scaled Spd Ref** Displays the speed command after scaling.	Default: Min/Max: Units: Scale:	0.0000 -/+14112.0000 rpm Par 4 [Motor NP RPM] = 1.0 P.U.		RO	Real
47	**SpdRef + Spd Trm1** Displays the final speed command used by the Speed Regulator. It is the sum of Par 46 [Scaled Spd Ref] and Par 21 [Speed Trim 1].	Default: Min/Max: Units: Scale:	0.0000 -/+8.0000 P.U. rpm Par 4 [Motor NP RPM] = 1.0 P.U.		RO	Real
48	**Spd Ref Bypass2** The speed command after the limit, ramp and s-curve blocks. Link a source directly to this parameter to bypass these blocks.	Default: Min/Max: Units: Scale:	0.0000 -/+8.0000 P.U. rpm Par 4 [Motor NP RPM] = 1.0 P.U.	Y	RW	Real
49	**Selected SpdRefA** Used to view the value of Speed Reference A, Par 27 [Speed Ref A Sel] from a Human Interface Module (HIM). Note: This parameter is new for firmware version 3.001.	Default: Min/Max: Units:	0.0000 -/+8.0000 rpm		RO	Real
50	**Selected SpdRefB** Used to view the value of Speed Reference B, Par 28 [Speed Ref B Sel] from a HIM. Note: This parameter is new for firmware version 3.001.	Default: Min/Max: Units:	0.0000 -/+8.0000 rpm		RO	Real
53	**Drive Ramp Rslt** Displays the speed reference value, after the limit function. This is the input to the error calculator and speed regulator. Available for use in peer-to-peer data links (DPI interface). This number is scaled so that rated motor speed will read 32768.	Default: Min/Max:	0 -/+262144		RO	32-bit Integer
54	**Inertia TrqLpfBW** Sets the bandwidth of the inertia compensation torque output low pass filter. A value of 0.0 will disable the filter. Note: This parameter is new for firmware version 3.001.	Default: Min/Max: Units:	35.0000 0.0000 /2000.0000 rad/s	Y	RW	Real
55	**Speed Comp** Displays the derivative or change in Par 56 [Inertia SpeedRef] on a per second basis. Link this parameter to Par 23 [Speed Trim 3] and set Par 24 [SpdTrim 3 Scale] to 0.002 to reduce position error in following applications.	Default: Min/Max: Units:	0.0000 -/+2200000000.0000 /s		RO	Real
56	**Inertia SpeedRef** The speed input of the inertia compensator. Link this parameter to the output of an internal ramp or s-curve block. The inertia compensator generates a torque reference that is proportional to the rate of change of speed input and total inertia.	Default: Min/Max: Units: Scale:	0.0000 -/+14112.0000 rpm Par 4 [Motor NP RPM] = 1.0 P.U.	Y	RW	Real
57	**InertiaAccelGain** Sets the acceleration gain for the Inertia Compensation function. A value of 1 produces 100% compensation.	Default: Min/Max:	1.0000 1.0000/2.0000	Y	RW	Real
58	**InertiaDecelGain** Sets the deceleration gain for the Inertia Compensation function. A value of 1 produces 100% compensation.	Default: Min/Max:	1.0000 1.0000/2.0000	Y	RW	Real
59	**Inertia Trq Add** The torque reference output generated by the inertia compensator. This torque level is modified by Par 57 [InertiaAccelGain] and Par 58 [InertiaDecelGain]. A value of 1.0 represents rated torque of the motor.	Default: Min/Max: Units:	1.0000 -/+8.0000 P.U. P.U.		RO	Real
60	**DeltaSpeedScale** Multiplier in the Inertia Compensation function - affects the value of Par 59 [Inertia Trq Add]. Use in center winder and unwind applications to compensate for roll diameter build-up.	Default: Min/Max:	1.0000 -/+1000.0000	Y	RW	Real
61	**Virt Encoder EPR** Equivalent Edges Per Revolution (EPR) or line count of a virtual encoder. A virtual encoder is a position reference whose input comes from speed reference. It accumulates pulses at the same rate as a real encoder of identical Pulses Per Revolution (PPR). Enter the equivalent PPR. For example, enter 1024 PPR to match an encoder with 1024 EPR.	Default: Min/Max: Units:	4096 10/67108864 EPR		RW	32-bit Integer

No.	Name Description	Values		Linkable	Read-Write	Data Type
62	**Virt Encdr Posit** A 32 bit pulse accumulator of the virtual encoder. The accumulated pulse count is equivalent to the hardware accumulator of a real encoder. It accumulates at a rate of 4x the value placed in Par 61 [Virt Encoder EPR]. The accumulator starts at zero upon position enable.	Default: Min/Max:	0 -/+2147483648		RO	32-bit Integer
63	**Virt Encdr Dlyed** One sample period delayed output of Par 62 [Virt Encdr Posit]. Used in some applications to phase synchronize position reference through SynchLink. The master is delayed one sample while the downstream drives update their position references – then all drives sample position simultaneously. The downstream drives do not select a delay.	Default: Min/Max:	0 -/+2147483648		RO	32-bit Integer
64	**FricComp Spd Ref** Supplies a speed input to the Friction Compensation algorithm. This input is normally a speed reference from a motion planner or ramped speed reference. It will trigger a torque feed forward response depending on its value.	Default: Min/Max: Units:	0.0000 -/+8.0000 P.U. rpm	Y	RW	Real
65	**FricComp Setup** Enter or write a value to configure the friction compensation algorithm. This is a packed word of 3 digits. Each digit has a possible selection of 10 levels. • The least significant digit sets the speed threshold in intervals of 0.0005 P.U. speed. • The next (middle) digit sets the hysteresis band for the "units" digit in intervals of 0.0005 P.U. velocity. • The most significant digit sets the number of time steps from stick to slip, each step is 0.002 sec. Example: Value = 524 means: 5 time steps between stick and slip, each of 0.002 sec. duration, 2 counts of hysteresis or 0.001 pu_speed (each count is 0.0005 pu_speed), and 4 counts or 0.002 pu_speed is the trigger threshold (each count is 0.0005 pu_speed).	Default: Min/Max:	325 0/999	Y	RW	16-bit Integer
66	**FricComp Stick** The torque needed to break away from zero speed. By nature of friction, the break away sticktion will always be greater than the running friction.	Default: Min/Max: Units:	0.1500 0.0000/8.0000 P.U.	Y	RW	Real
67	**FricComp Slip** The torque level to sustain very low speed – once "break away" has been achieved. By nature of friction, viscous friction will always be less than sticktion.	Default: Min/Max: Units:	0.1000 0.0000/8.0000 P.U.	Y	RW	Real
68	**FricComp Rated** The torque needed to keep the motor running at base speed and with no process loading. The friction compensation algorithm assumes a linear or viscous component of friction between Par 67 [FricComp Slip] and Par 68 [FricComp Rated].	Default: Min/Max: Units:	0.2000 0.0000/8.0000 P.U.	Y	RW	Real
69	**FricComp Trq Add** The torque reference output of the Friction Compensation function. A value of 1.0 represents rated torque of the motor.	Default: Min/Max: Units: Scale:	0.0000 -/+8.0000 P.U. P.U. Motor P.U. Torque		RO	Real
71	**Filtered SpdFdbk** Displays the motor speed feedback value output from the feedback Lead/Lag filter.	Default: Min/Max: Units: Scale:	0.0000 -/+14112.0000 rpm Par 4 [Motor NP RPM] = 1.0 P.U.		RO	Real
72	**Scaled Spd Fdbk** Displays the product of the speed feedback and Par 73 [Spd Fdbk Scale]. This parameter is for display only.	Default: Min/Max: Scale:	0.0000 -/+2200000000.0000 Par 4 [Motor NP RPM] = 1.0 P.U.		RO	Real
73	**Spd Fdbk Scale** A user-adjustable scale factor (multiplier) for speed feedback. It is multiplied with speed feedback to produce Par 72 [Scaled Spd Fdbk].	Default: Min/Max:	1.0000 -/+2200000000.0000	Y	RW	Real
74	**Atune Spd Ref** Sets the maximum speed of the motor during the Flux current and inertia tests.	Default: Min/Max: Units: Scale:	Par 4 x 0.8500 Par 4 x 0.1000/Par 4 x 1.0000 rpm Par 4 [Motor NP RPM] = 1.0 P.U.		RW	Real
75	**Rev Speed Limit** Sets a limit on the speed reference in the negative direction. This value can be entered as a negative value or zero. The maximum value equals Par 532 [Maximum Freq] x 0.95.	Default: Min/Max: Units: Scale:	Par 4 x -1.2500 -8.0000/0.0000 rpm Par 4 [Motor NP RPM] = 1.0 P.U.		RW	Real
76	**Fwd Speed Limit** Sets a limit on the speed reference in the positive direction. This value can be entered as a positive value or zero. The maximum value equals Par 532 [Maximum Freq] x 0.95.	Default: Min/Max: Units: Scale:	Par 4 x 1.2500 0.0000/8.0000 rpm Par 4 [Motor NP RPM] = 1.0 P.U.		RW	Real

No.	Name Description	Values	Linkable	Read-Write	Data Type
77	**Spd Ref TP Sel** Enter or write a value to select speed reference data displayed in Par 79 [Spd Ref TP Data] and Par 78 [Spd Ref TP RPM]. Note: The values for options 7, 8, & 9 were changed to "Reserved" for firmware version 2.004.	Default: 0 = "Zero" Options: 0 = "Zero" 1 = "User Ref" 2 = "Logic Select" 3 = "Lgc Sel Ref" 4 = "Ramp Spd Ref" 5 = "Ramp In" 6 = "Filt Spd Ref" 7 = "Reserved" 8 = "Reserved" 9 = "Reserved" 10 = "Amp Lim Stat" 11 = "Ramp Match" 12 = "S Crv Match" 13 = "S Array size" 14 = "S Array Indx" 15 = "Reserved" 16 = "Scl Ext Trim" 17 = "Trim FiltOut" 18 = "Ref w/Trim" 19 = "Amp Lim2 In" 20 = "Amp LimStat2" 21 = "Amp Lim2 Out" 22 = "FTD Ramp Out" 23 = "Reserved"			
78	**Spd Ref TP RPM** Displays the value selected in Par 77 [Spd Ref TP Sel] in rpm. This display should only be used if the selected value is floating point data.	Default: 0.0000 Min/Max: -/+8.0000 Units: rpm Scale: Par 4 [Motor NP RPM] = 1.0 P.U.		RO	Real
79	**Spd Ref TP Data** Displays the value selected in Par 77 [Spd Ref TP Sel]. This display should only be used if the selected value is integer data.	Default: 0 Min/Max: -/+32768		RO	16-bit Integer
81	**Spd Reg P Gain** Sets the proportional gain of the speed regulator. This value is automatically calculated based on the bandwidth setting in Par 90 [Spd Reg BW]. Proportional gain may be manually adjusted by setting Par 90 [Spd Reg BW] to a value of zero. Units are (per unit torque) / (per unit speed). The maximum value for Par 81 [Spd Reg P Gain] = Par 90 [Spd Reg BW] x Par 9 [Total Inertia]	Default: 20.0000 Min/Max: 0.0000/3000.0000	Y	RW	Real

Total Inertia (Par 9)	Maximum Speed Regulator Bandwidth (Par 90)	Maximum Speed Regulator Proportional Gain (Par 81)
0.01	475 (0.5 ms)	4.75
0.01	650 (0.25 ms)	6.50
0.01	30 (sensorless mode)	0.03
2.0	475 (0.5 ms)	950
2.0	650 (0.25 ms)	1300
2.0	30 (sensorless mode)	60

Note: The Max. value was increased from 600.0000 for firmware version 3.001.

82	**Spd Reg I Gain** Sets the integral gain of the speed regulator. This value is automatically calculated based on the bandwidth setting in Par 90 [Spd Reg BW]. Integral gain may be manually adjusted by setting Par 90 [Spd Reg BW] to a value of zero. Units are (per unit torque/sec) / (per unit speed).	Default: 50.0000 Min/Max: 0.0000/100000.0000 Units: /s	Y	RW	Real
84	**SpdReg AntiBckup** By setting this parameter to 0.3, the drive will not over shoot to a step response. This parameter has no affect on the drive's response to load changes. The recommended setting is 0.1000 to 0.5000. Note: This parameter was changed to non-linkable for firmware version 3.001.	Default: 0.0000 Min/Max: 0.0000/0.5000		RW	Real

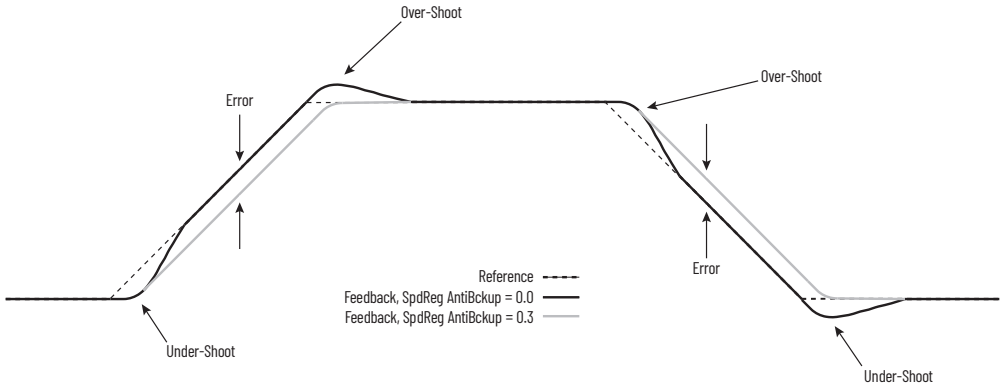

85	**Servo Lock Gain** Sets the gain of an additional integrator in the speed regulator. The effect of Servo Lock is to increase stiffness of the speed response to a load disturbance. It behaves like a position regulator with velocity feed forward, but without the pulse accuracy of a true position regulator. The units of Servo Lock are rad/sec. Gain should normally be set to less than 1/3 speed regulator bandwidth, or for the desired response. Set to zero to disable Servo Lock.	Default: 0.0000 Min/Max: 0.0000/300.0000 Units: /s	Y	RW	Real

No.	Name Description	Values		Linkable	Read-Write	Data Type
86	**Spd Reg Droop** Specifies the amount of base speed that the speed reference is reduced when at full load torque. Use the droop function to cause the motor speed to decrease with an increase in load. The units are per unit speed / per unit torque.	Default: Min/Max: Units:	0.0000 0.0000/0.2500 P.U.	Y	RW	Real
87	**SReg Trq Preset** When the drive is not enabled, this parameter presets integrator output Par 101 [SpdReg Integ Out] to a specified torque level. This ensures that the torque command will be at the preset value when the drive is enabled and run. Par 153 [Control Options], bit 18 [SpdRegPreset] = 0, enables this preset.	Default: Min/Max: Units:	0.0000 -/+8.0000 P.U. P.U.	Y	RW	16-bit Integer
89	**Spd Err Filt BW** Sets the bandwidth of a 2nd order Butterworth low pass filter, which reduces quantization noise. The units are rad/sec. A value of 0 will disable the filter. The value should be greater than 5 times the value of Par 90 [Spd Reg BW]. Note: The default value for this parameter was changed from 200.0000 to 700.0000 for firmware version 2.003.	Default: Min/Max: Units:	700.0000 0.0000/2000.0000 rad/s	Y	RW	Real
90	**Spd Reg BW** Sets the bandwidth of the speed regulator in rad/sec. Bandwidth is also referred to as the crossover frequency. Small signal time response is approximately 1/BW and is the time to reach 63% of set point. A change to this parameter will cause an automatic update of Par 81 [Spd Reg P Gain] and Par 82 [Spd Reg I Gain]. To disable the automatic gain calculation, set this parameter to a value of zero.	Default: Min/Max: Units:	10.0000 0.0000/500.0000 rad/s	Y	RW	Real
91	**Spd Reg Damping** Sets the damping factor of the drive's characteristic equation and factors in the calculation of the integral gain. A damping factor of 1.0 is considered critical damp. Lowering the damping will produce faster load disturbance rejection, but may cause a more oscillatory response. When Par 90 [Spd Reg BW] is set to zero, damping factor has no effect.	Default: Min/Max:	1.0000 0.5000/3.0000	Y	RW	Real
92	**SpdReg P Gain Mx** Places a limit on the maximum value of proportional gain in Par 81 [Spd Reg P Gain] and Par 104 [SrIss Spd Reg Kp]. When gains are automatically calculated, this parameter is necessary to limit the amplification of noise with increased inertia. Note: The Max. value was increased from 600.0000 for firmware version 3.001.	Default: Min/Max:	100.0000 0.0000/3000.0000	Y	RW	Real
93	**SRegFB Filt Gain** Sets the lead term for the speed feedback filter. Values greater than 1 will result in a lead function and values less than 1 will result in a lag function. A value of 1 will disable the filter.	Default: Min/Max:	1.0000 -5.0000/20.0000	Y	RW	Real
94	**SReg FB Filt BW** Sets the frequency for the Speed Feedback filter.	Default: Min/Max: Units:	35.0000 0.0000/3760.0000 rad/s	Y	RW	Real
95	**SRegOut FiltGain** Sets the lead term for the Speed Regulator output filter. Values greater than 1 will result in a lead function and values less than 1 will result in a lag function. A value of 1 will disable the filter. Note: The default value for this parameter was changed from 0.7000 to 1.0000 for firmware version 2.003.	Default: Min/Max:	1.0000 -/+5.0000	Y	RW	Real
96	**SReg Out Filt BW** Sets the frequency for the Speed Regulator output filter.	Default: Min/Max: Units:	30.0000 0.0000/3760.0000 rad/s	Y	RW	Real
97	**Act Spd Reg BW** Displays the actual speed regulator bandwidth or crossover frequency. The value represents the bandwidth in Par 90 [Spd Reg BW] after the maximum bandwidth limits have been applied.	Default: Min/Max: Units:	10.0000 0.0000/500.0000 rad/s		RO	Real
98	**Slip RPM @ FLA** Sets the amount of compensation to drive output at motor full load current (FLA). Note: This parameter was added for firmware version 2.003.	Default: Min/Max: Units:	Based on [Motor NP RPM] 0.0/1200.0 rpm rpm	Y	RW	16-bit Integer
99	**Slip Comp Gain** Sets the response time of slip compensation. Note: This parameter was added for firmware version 2.003.	Default: Min/Max: Units:	40.0 1.0/100.0 rad/s	Y	RW	16-bit Integer
100	**Speed Error** The error (difference) between the motor speed reference (+) and the filtered motor speed feedback (–).	Default: Min/Max: Units: Scale:	0.0000 -/+14112.0000 rpm Par 4 [Motor NP RPM] = 1.0 P.U.		RO	Real
101	**SpdReg Integ Out** The output value of the Speed Regulator Integral channel.	Default: Min/Max: Units: Scale:	0.0000 -/+8.0000 P.U. P.U. 1.0 P.U. Torque		RO	Real
102	**Spd Reg Pos Lim** Sets the positive limit of the Speed Regulator output value. The output of the Speed Regulator is limited by adjustable high and low limits.	Default: Min.Max: Units: Scale:	3.0000 0.0000/6.0000 P.U. Par 4 [Motor NP RPM] = 1.0 P.U.	Y	RW	Real
103	**Spd Reg Neg Lim** Sets the negative limit of the Speed Regulator output value. The output of the Speed regulator is limited by adjustable high and low limits.	Default: Min/Max: Units: Scale:	-3.0000 -6.0000/0.0000 P.U. Par 4 [Motor NP RPM] = 1.0 P.U.	Y	RW	Real

No.	Name Description	Values		Linkable	Read-Write	Data Type
104	**SrLss Spd Reg Kp** Sets the proportional gain of the Speed Regulator when sensorless motor speed feedback is used. This value is automatically calculated based on the bandwidth set in Par 106 [Srlss Spd Reg BW]. Proportional gain may be manually adjusted by setting Par 106 to zero. This gain setting has no units (per unit torque) / (per unit speed error).	Default: Min/Max:	8.0000 0.0000/200.0000	Y	RW	Real
105	**SrLss Spd Reg Ki** Sets the integral gain of the Speed Regulator when sensorless motor speed feedback is used. This value is automatically calculated based on the bandwidth set in Par 106 [Srlss Spd Reg BW]. Integral gain may be manually adjusted by setting Par 106 to zero. Units are '/s' (per unit torque/sec) / (per unit speed error).	Default: Min/Max: Units:	8.0000 0.0000/4095.8000 /s	Y	RW	Real
106	**SrLss Spd Reg BW** Sets the bandwidth of the Speed Regulator when sensorless motor speed feedback is used. Bandwidth is also referred to as the crossover frequency. Small integral time response is approximately 1/BW and is the time to reach 63% of set point. A change to this parameter will cause an automatic update of Par 104 [Srlss Spd Reg Kp] and Par 105 [Srlss Spd Reg Ki]. To disable the automatic gain calculation, set this parameter to zero.	Default: Min/Max: Units:	10.0000 0.0000/30.0000 rad/s	Y	RW	Real
107	**Slip RPM Meter** Displays the present amount of adjustment being applied as slip compensation. Note: This parameter was added for firmware version 2.003.	Default: Min/Max: Units:	0.0 +/- 3000.0 rpm		RO	16-bit Integer
108	**Spd Reg TP Sel** Enter or write a value to select Speed Regulator data displayed in Par 109 [Spd Reg TP Data]. Note: The values for options 10 & 11 were changed to "Reserved" for firmware version 2.004.	Default: Options:	0 = "Zero" 0 = "Zero" 1 = "Iq Rate BW" 2 = "Reserved" 3 = "PGain Max BW" 4 = "BW Limit" 5 = "InertiaMaxBW" 6 = "BW Lim Stat" 7 = "BW Select" 8 = "Totl Inertia" 9 = "TI Lim Stat" 10 = "Reserved" 11 = "Reserved" 12 = "I Rate Limit" 13 = "I RtLim Stat" 14 = "PGain Max" 15 = "GnMx LimStat" 16 = "Damping" 17 = "Dmp Lim Stat" 18 = "Reserved" 19 = "Srls KpMxBW" 20 = "Srls BWLimit" 21 = "SrlsInrtMxBW" 22 = "SrlsBWSelect" 23 = "Srls BW Calc" 24 = "Snsr BW Calc" 25 = "Reserved" 26 = "Reserved" 27 = "Spd FiltOut" 28 = "Servo Lock" 29 = "Spd+ServLock" 30 = "Prop Output" 31 = "Intg Input" 32 = "Scld Int Pre" 33 = "Sel Int Pre" 34 = "Droop Output" 35 = "Out Lim Stat" 36 = "Intg Hold" 37 = "Srlss ZeroWe" 38 = "I GainParLim" 39 = "P GainParLim" 40 = "SrvLck ParLm" 41 = "AntiBkup PLm" 42 = "Droop ParLim" 43 = "Pos Lim Stat" 44 = "Neg Lim Stat" 45 = "Limiter Out" 46 = "Active Pgain" 47 = "Active Igain" 48 = "Reserved" 49 = "Reserved" 50 = "Reserved' 51 = "Reserved" 52 = "Reserved" 53 = "Reserved"			
109	**Spd Reg TP Data** Displays the data selected by Par 108 [Spd Reg TP Sel].	Default: Min/Max: Units:	0.0000 -/+8.0000 P.U. P.U.		RO	Real
110	**Speed/TorqueMode** Selects the source for the drive torque reference. Note: Values 7 & 8 were added for firmware version 3.001.	Default: Options:	1 = "Speed Reg" 0 = "Zero Torque" 1 = "Speed Reg" 2 = "Torque Ref" 3 = "Min Spd/Trq" 4 = "Max Spd/Trq" 5 = "Sum Spd/Trq" 6 = "AbsMnSpd/Trq" 7 = "SLAT Minimum" 8 = "SLAT Maximum"			
111	**Torque Ref 1** Supplies an external motor torque reference to the drive. This parameter is divided by the value in Par 112 [Torq Ref1 Div]. A value of 1.0 represents rated torque of the motor.	Default: Min/Max: Scale:	0.0000 -/+2200000000.0000 1.0 Rated Motor Torque	Y	RW	Real
112	**Torque Ref1 Div** Par 111 [Torque Ref 1] is divided by this number. Use this parameter to scale the value of Par 111 [Torque Ref 1].	Default: Min/Max:	1.0000 -/+2200000000.0000	Y	RW	Real
113	**Torque Ref 2** Supplies an external motor torque reference to the drive. This parameter is multiplied by the value in Par 114 [Torq Ref2 Mult]. A value of 1.0 represents rated torque of the motor.	Default: Min/Max: Scale:	0.0000 -/+2200000000.0000 1.0 Rated Motor Torque	Y	RW	Real

No.	Name Description	Values		Linkable	Read-Write	Data Type
114	**Torque Ref2 Mult** Par 113 [Torque Ref 2] is multiplied by this number. Use this parameter to scale the value of Par 113 [Torque Ref 2].	Default: Min/Max:	1.0000 -/+2200000000.0000	Y	RW	Real
115	**Torque Trim** The amount added to Par 111 [Torque Ref 1] and Par 113 [Torque Ref 2] before the Speed/Torque Mode Selector. A value of 1.0 represents rated torque of the motor.	Default: Min/Max: Units: Scale:	0.0000 -/+8.0000 P.U. P.U. 1.0 Rated Motor Torque	Y	RW	Real
116	**Torque Step** The amount added to the selected Torque Reference before notch filtering or limits are applied. A value of 1.0 represents rated torque of the motor.	Default: Min/Max: Units: Scale:	0.0000 -/+8.0000 P.U. P.U. 1.0 Rated Motor Torque	Y	RW	Real

No.	Name Description	Values		Linkable	Read-Write	Data Type
117	**NotchAttenuation** Sets the depth for the Notch Filter. Attenuation is the ratio of the output to the input at the notch frequency. An attenuation of 30 means that the notch output is 1/30th of the input at the specified frequency. Calculation: Attenuation = Input / Output 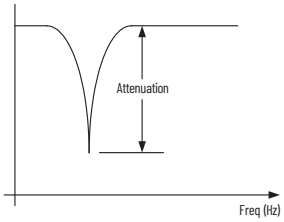 	Default: Min/Max:	50 0/500	Y	RW	Real
118	**Notch Filt Freq** The center frequency for Notch filter. To disable, set to zero (0).	Default: Min/Max: Units:	0.0000 0.0000/500.0000 Hz	Y	RW	Real
119 A	**SLAT ErrorSetpnt** Determines the rpms at which the drive will switch from speed mode to the Speed Limited Adjustable Torque (SLAT) min. or SLAT max. mode, identified in Par 110 [Speed/Torque Mode] bit 7 "SLAT Minimum" or bit 8 "SLAT Maximum". Note: This parameter was added for firmware version 3.001.	Default: Min/Max: Units:	0.005 0.0/0.1 rpm	Y	RW	Real
120 A	**SLAT Dwell Time** SLAT control dwell time. The time in seconds that the drive can be above the error set point in Par 119 [SLAT ErrorSetpnt] before returning to the SLAT min. or SLAT max. mode. Note: This parameter was added for firmware version 3.001.	Default: Min/Max: Units:	0.0 0.0/2.0 s	Y	RW	Real
123	**Trq PosLim Actl** Sets the internal torque limit for positive torque reference values. The positive internal motor torque will not be allowed to exceed this value.	Default: Min/Max: Units:	1.0 0.0/8.0 P.U.		RO	Real
124	**Trq NegLim Actl** Sets the internal torque limit for negative torque reference values. The internal negative motor torque will not be allowed to exceed this value.	Default: Min/Max: Units:	-1.0 -8.0/0.0 P.U.		RO	Real
125	**Torque Pos Limit** Sets the external torque limit for positive torque reference values. The external positive motor torque will not be allowed to exceed this value.	Default: Min/Max: Units:	2.0000 0.0000/8.0000 P.U.	Y	RW	Real
126	**Torque Neg Limit** Sets the external torque limit for negative torque reference values. The external negative motor torque will not be allowed to exceed this value.	Default: Min/Max: Units:	-2.0000 -8.0000/0.0000 P.U.	Y	RW	Real
127	**Mtring Power Lim** Sets the maximum motoring (positive) power of the drive. This can be calculated by multiplying the desired maximum motor torque and the maximum motor speed. A value of 1.0 = nominal motor power.	Default: Min/Max: Units:	8.0000 0.0000/8.0000 P.U.	Y	RW	Real
128	**Regen Power Lim** Sets the maximum regenerative (negative) power of the drive. This can be calculated by multiplying the desired maximum motor torque and the maximum motor speed. A value of 1.0 = nominal motor power. Note: The default value for this parameter was changed from -1.0000 to -0.5000 for firmware version 2.003.	Default: Min/Max: Units:	-0.5000 -8.0000/0.0000 P.U.	Y	RW	Real
129	**Atune Trq Ref** Sets the motor torque that is applied to the motor during the flux current and inertia tests. Note: The minimum value for this parameter was changed from 0.2500 to 0.2000 for firmware version 2.003.	Default: Min/Max: Units: Scale:	0.50 0.2/1.0 P.U. 1.0 = P.U. Motor to Torque		RW	Real
130	**Trq Ref TP Sel** Enter or write a value to select torque reference data displayed in Par 131 [Trq Ref TP Data]. Note: The value for option 5 was changed to "Reserved" for firmware version 2.004.	Default: Options:	0 = "Zero" 0 = "Zero" 1 = "Scale Output" 2 = "Spd Torque" 3 = "Trq Mode Out" 4 = "Actv TrqMode" 5 = "Reserved" 6 = "Trq En Input" 7 = "NotchFiltOut" 8 = "NotchFilt In" 9 = "Trq Lim In" 10 = "Bus Reg Out" 11 = "Pos Pwr Lim" 12 = "Neg Pwr Lim" 13 = "Pos Atun Trq" 14 = "Neg Atun Trq" 15 = "Pos Lim Src" 16 = "Neg Lim Src" 17 = "MPwr Par Lim" 18 = "RPwr Par Lim" 19 = "+Trq ParLim" 20 = "-Trq ParLim" 21 = "Nom Bus Volt" 22 = "Bus Volt Hys" 23 = "Bus Reg Ref" 24 = "Bus Reg Err" 25 = "Bus Reg Intg" 26 = "BusReg Clamp" 27 = "BusRegOutput" 28 = "IAA Filt Out" 29 = "IAA dVf/dt" 30 = "MC Trq Lim" 31 = "IqActlTrqLim"			
131	**Trq Ref TP Data** Displays the data selected by Par 130 [Trq Ref TP Sel].	Default: Min/Max: Units: Scale:	0.0 -/+8.0 P.U. P.U. 1.0 = P.U. Motor to Torque		RO	Real

No.	Name Description	Values	Linkable	Read-Write	Data Type

132 **Inert Adapt Sel**

Configures the Inertia Adaptation Algorithm (IAA Function).

- Bit 0 "Inrtia Adapt" when set to 1 (on), the Inertia Adaptation function will effect enhanced stability, higher bandwidths and dynamic stiffness. Useful when systems with a gear-box becomes disconnected from the load. Also used with motors that have very little inertia that otherwise lack dynamic stiffness, even at high bandwidths.
- Bit 1 "Load Est" when set to 1 (on), the Load Estimate option removes or greatly reduces load disturbances and gives quicker system response.
- Bit 2 "First Diff" selects the first difference feedback for Inertia Adaptation.

Notes: When setting both Bit 0 & 1, stability is enhanced and load disturbances are removed. Bit 2 "First Diff" was added for firmware version 3.001.

Options	Reserved	Reserved	Reserved	Reserved	Reserved	Reserved	Reserved	Reserved	Reserved	Reserved	Reserved	Reserved	Reserved	Reserved	First Diff	Load Est	Inertia Adapt
Default	x	x	x	x	x	x	x	x	x	x	x	x	x	x	0	0	0
Bit	16	15	14	13	12	11	10	9	8	7	6	5	4	3	2	1	0

0 = False
1 = True

133 **Inert Adapt BW**

This parameter sets the bandwidth of the Inertia Adaptation function when the IAA function is selected (Par 132 [Inert Adapt Sel], bit 0 = 1). Typical IAA bandwidths range from 70 to 150 rad/sec with 100 rad/sec nominal best.

If the Load Estimate function is selected (Par 132 [Inert Adapt Sel], bit 0 = 1), then this parameter sets the natural frequency of a filter in rad/sec. Typical values range from 10 to 150 rad/sec with higher values being more responsive to disturbances but with increased system noise. There is no nominal best value, but 40 rad/sec is a suggested starting point. This adjustment may not function well in 'sloppy' geared systems.

If both Inertia Adaptation and Load Estimate functions are active, use a bandwidth setting of 100 rad/sec.

		Linkable	Read-Write	Data Type
Default: Min/Max: Units:	100.0000 10.0000/250.0000 rad/s	Y	RW	Real

134 **Inert Adapt Gain**

This parameter sets a multiplier of system inertia when the Inertia Adaptation function is selected (Par 132 [Inert Adapt Sel], bit 0 = 1). Higher values may cause high frequency ringing, while smaller values may cause fundamental load instability. A typical value is 0.5 This parameter has no affect on the Load Estimate function.

		Linkable	Read-Write	Data Type
Default: Min/Max:	0.500 0.300/1.000	Y	RW	Real

136 **Skip Speed 1**
137 **Skip Speed 2**
138 **Skip Speed 3**

Sets a frequency at which the drive will not operate. [Skip Speed 1 - 3] and Par 139 [Skip Speed Band] must not equal 0.

Note: These parameters were added for firmware version 2.003.

		Linkable	Read-Write	Data Type
Default: Min/Max: Units:	0.0 –/+30000.0 rpm	Y	RW	16-bit Integer

139 **Skip Speed Band**

Determines the bandwidth around a skip frequency. [Skip Speed Band] is split, applying 1/2 above and 1/2 below the actual skip frequency. The same bandwidth applies to all skip frequencies.

Note: This parameter was added for firmware version 2.003.

		Linkable	Read-Write	Data Type
Default: Min/Max: Units:	0.0 0.0/1000.0 rpm	Y	RW	16-bit Integer

145 **Hardware Present**

Indicates if optional hardware is installed.

Options	Reserved	Reserved	Reserved	Reserved	Reserved	Reserved	Reserved	Reserved	Reserved	Reserved	Reserved	Reserved	Reserved	Reserved	Reserved	DriveLogix	Stahl Fdbck	Reserved	TemposonFdbk	Resolver Brd	MDI Brd	Heidenhain	StegmannHiRs	2nd Encoder	Reserved	Reserved	SafeOff Brd	Reserved	SynchLinkBrd	Reserved	EmbeddedENET	DPI Comm Brd
Default	x	x	x	x	x	x	x	x	x	x	x	x	x	x	x	0	0	x	0	0	0	0	0	0	x	x	0	x	0	x	0	0
Bit	31	30	29	28	27	26	25	24	23	22	21	20	19	18	17	16	15	14	13	12	11	10	9	8	7	6	5	4	3	2	1	0

0 = False
1 = True

146 **FW TaskTime Sel**

Sets the scan times for the drive firmware. Changing the firmware scan times will affect drive performance. Faster scan times may allow for higher bandwidth of the internal regulators. To achieve faster scan times some functions may need to be disabled. Only the most demanding application may benefit from faster scan times. Typically, adjusting this parameter is not needed, it is recommended you consult the factory before changing.

		Linkable	Read-Write	Data Type
Default: Options:	0 = "0.5 /2 /8ms" 0 = "0.5 /2 /8ms" 1 = "0.5 /1 /8ms" 2 = "0.25 /1 /8ms"		RW	16-bit Integer

147 **FW Functions En**

Allows specific firmware functions to be disabled. When a bit is false, the associated function is disabled and all related parameters will be hidden. When a bit is true, the associated function is enabled and all related parameters will be displayed.

Notes: Bits 18, 20, & 21 were changed to "Reserved" for firmware version 2.004. Bit 19 "MotinPlanner" and 24 "PhaseLockLp" were added for firmware version 3.001.

Options	DvlpmntDeBug	Trending	Reserved	Peak Detect	Test Points	Reserved	Reserved	Phase LockLp	Sync Gener	PosWtch/Dtct	Reserved	Reserved	MotinPlanner	Reserved	Reserved	PositionCtrl	DI BitSwaps	Digital Outs	Analog Outs	Analog Ins	PF700S	Reserved	Reserved	Lim/Func Gen	Process Trim	Reserved	Speed Reg	Virt Encoder	FrictionComp	Inertia Comp	Spd Ref Ctrl	Spd Ref Sel
Default	1	1	x	1	1	x	x	0	1	1	x	x	0	x	x	0	1	1	1	1	1	x	x	1	1	x	1	1	1	1	1	1
Bit	31	30	29	28	27	26	25	24	23	22	21	20	19	18	17	16	15	14	13	12	11	10	9	8	7	6	5	4	3	2	1	0

0 = False
1 = True

No.	Name Description	Values	Linkable	Read-Write	Data Type
148	**FW TaskTime Actl** Displays the actual firmware scan times selected by Par 146 [FW TaskTime Sel]. Before the change to the firmware scan time is accepted, the drive evaluates the change to ensure the processor will not be overloaded. If there is risk of overloading the processor, the change will not be accepted.	Default: 0 = "0.5 /2 /8ms" Options: 0 = "0.5 /2 /8ms" 1 = "0.5 /1 /8ms" 2 = "0.25 /1 /8ms" 3 = "0.25 /0.5 /8ms" 4 = "0.1/0.5 /8ms" 5 = "0.5/1 /2ms" 6 = "0.25 /1 /2ms" 7 = "0.25 /0.5 /2ms" 8 = "0.1/0.5 /2ms"		RO	16-bit Integer

149 FW FunctionsActl

Displays the actual state of the firmware functions. If activating requested functions could overload the processor, the change to Par 147 [FW Functions En] will not be accepted.
Note: Bit 19 "MotinPlanner" and 24 "PhaseLockLp" were added for firmware version 3.001

Options	DvlpmntDeBug	Trending	Reserved	Peak Detect	Test Points	Reserved	Reserved	Phase LockLp	Sync Gener	PosWtch/Dtct	Posit Offset	Posit Motion	MotinPlanner	Posit Pt2Pt	Posit Direct	Posit Interp	DI BitSwaps	Digital Outs	Analog Outs	Analog Ins	Reserved	Reserved	Reserved	Lim/Func Gen	Process Trim	Reserved	Speed Reg	Virt Encoder	FrictionComp	Inertia Comp	Spd Ref Ctrl	Spd Ref Sel
Default	0	0	x	0	0	x	x	0	0	0	0	0	0	0	0	0	0	0	0	0	x	x	x	0	0	x	0	0	0	0	0	0
Bit	31	30	29	28	27	26	25	24	23	22	21	20	19	18	17	16	15	14	13	12	11	10	9	8	7	6	5	4	3	2	1	0

0 = False
1 = True

150 Logic State Mach

Indicates the logical state of the drive.
- "Stopped" indicates zero speed has been detected and the speed and torque regulators are disabled.
- 8 "Slip Test" indicates that the Slip Frequency Auto Tune test is in progress.
- 11 "Sleep Mode" indicates that the drive has entered sleep mode.

Note: Value 11 "Sleep Mode" was added for firmware version 5.002. Value 8 "Slip Test" was added for firmware version 3.001. Values 9 "Finding Home" and 10 "Homing Done" were added for firmware version 3.003.

Default: 0 = "Stopped"

Options:
0 = "Stopped"
1 = "Starting"
2 = "Running"
3 = "Stopping"
4 = "Inertia Test"
5 = "MC Diag"
6 = "Test Done"
7 = "EnableHealth"
8 = "Slip Test"
9 = "Finding Home"
10 = "Homing Done"
11 = "Sleep Mode"

151 Logic Command

The controller-drive interface (as defined by the Controller Communication Format) sets bits to enable and disable various functions and algorithms. Bits that are changed here are reflected in Par 152 [Applied LogicCmd].
Note: Bits 4 through 9 are NOT recalled from Control EEprom. They will be cleared upon drive powerup or following an EEprom recall operation.

Options	PI Trim Rst	PI Trim Hold	Position En	PI Trim En	Frict Comp	Inertia Comp	Ext Flt/Alm	Reserved	Reserved	SReg IntgRst	SReg IntgHld	SpdRamp Hold	Time Axis En	TachLoss Rst	Spd S Crv En	SpdRamp Dsbl
Default	0	0	0	0	0	0	0	x	x	0	0	0	0	0	0	0
Bit	15	14	13	12	11	10	9	8	7	6	5	4	3	2	1	0

0 = False
1 = True

152 Applied LogicCmd

Displays the Logic Command that is applied to the Regulators and Control Algorithms within the drive. Logic Commands come from the 32-bit Logic Command found in a connection with the Logix Controller.
Note: Bits 7 & 8 were changed to "Reserved" for firmware version 2.004.

Options	Reserved	Spd Ref Sel2	Spd Ref Sel1	Spd Ref Sel0	Reserved	Reserved	Coast Stop	CurrLim Stop	Jog 2	Reserved	Reverse	Forward	Clear Fault	Jog 1	Start	Normal Stop	PI Trim Rst	PI Trim Hold	Position En	PI Trim En	Frict Comp	Inertia Comp	Ext Flt/Alm	Reserved	Reserved	SReg IntgRst	SReg IntgHld	SpdRamp Hold	Time Axis En	TachLoss Rst	Spd S Crv En	SpdRamp Dsbl
Default	x	0	0	0	x	x	0	0	0	x	0	0	0	0	0	0	0	0	0	0	0	0	0	x	x	0	0	0	0	0	0	0
Bit	31	30	29	28	27	26	25	24	23	22	21	20	19	18	17	16	15	14	13	12	11	10	9	8	7	6	5	4	3	2	1	0

0 = False
1 = True

Speed Reference Select Inputs

Bit 30	Bit 29	Bit 28	
Spd Ref Sel2	**Spd Ref Sel1**	**Spd Ref Sel0**	**Auto Reference Source**
0	0	0	Speed Ref A Sel
0	0	1	Speed Ref B Sel
0	1	0	Preset Speed 2
0	1	1	Preset Speed 3
1	0	0	Preset Speed 4
1	0	1	Preset Speed 5
1	1	0	Preset Speed 6
1	1	1	Preset Speed 7

To access Preset Speed 1, set parameter 27 [Speed Ref A Sel] or 28 [Speed Ref B Sel] to 5 - "Preset Spd 1."

No.	Name Description	Values	Linkable	Read-Write	Data Type
153	**Control Options** Set bits to configure the options for operating the drive. Note: Bit 3 "Flying Start" was added for firmware version 2.004. Bit 20, 21, and 29 were added for firmware version 3.001. Added bit 31 "Ids Test Enable" for firmware version 4.001.				

Options	Ids Test Enable	Sys Inrt En	Slip Test En	PM Offset En	Pwr Diag En	Trq Trim En	MC Atune En	Time Axis En	PITrim EnOut	Reserved	Inrt TrqLPEn	Motor OL Ret	Slip Comp En	SpdRegPreset	Aux Pwr Sply	Auto Tach Sw	Reserved DM	Reserved DM	OL ClsLpDsbl	Jog -NoInteg	Iq Delay	Motor Dir	Reserved	3WireControl	Trq DsblZSpd	Trq StopRamp	Jog - NoRamp	Jog in Trq	Flying Start	SErrFilt1Stg	SRef LdLg En	Bipolar SRef
Default	0	0	0	0	0	0	0	0	0	x	1	0	0	0	0	0	0	0	0	0	0	0	0	1	0	0	0	0	1	0	0	1
Bit	31	30	29	28	27	26	25	24	23	22	21	20	19	18	17	16	15	14	13	12	11	10	9	8	7	6	5	4	3	2	1	0

0 = False
1 = True

Bit	Name	Current Function
0	Bipolar SRef	When this bit is enabled a bipolar speed reference is used. In bipolar reference mode, Par 40 [Selected Spd Ref] indicates both the speed magnitude and the direction: Positive speed reference values (+) = forward direction and negative speed reference values (–) = reverse direction. When this bit is disabled a unipolar speed reference is used. In unipolar mode, the speed reference is limited to a minimum value of zero (0). In this case Par 40 [Selected Spd Ref] supplies only the speed magnitude. The direction is determined by Par 152 [Applied LogicCmd] bits 20 "Forward" and 21 "Reverse". The forward/reverse direction button on the HIM is one possible source for the Applied Logic Command direction bits. The following chart explains the effect that the direction button on the HIM has based on the condition of the "Bipolar SRef" bit: Bipolar — Reference Controlled By HIM? — HIM Direction Button Enabled — Yes — Changes the motor direction due to a HIM supplied (+) or (-) command signal. Enabled — No — Has no effect on motor direction. Direction determined by sign of Par 40 [Selected Spd Ref]. Disabled — Yes — Changes the motor direction due to a HIM supplied Forward or Reverse Logic Command bit. Disabled — No — Changes the motor direction due to a HIM supplied Forward or Reverse Logic Command bit. In either Bipolar or Unipolar mode, the selected direction can be determined from the sign of Par 41 [Limited Spd Ref]. Positive values indicate forward rotation and negative values indicate reverse rotation.
1	SRef LdLg En	Enables/disables the Speed Reference Lead Lag Filter
2	SErrFilt1Stg	Setting this bit will configure the speed error filter as a single first order low pass filter. Clearing this bit will configure the speed error filter as two cascaded first order low pass filters
3	Flying Start	Enables/disables the function which reconnects to a spinning motor at actual rpm when a start command is issued
4	Jog in Torq	Overrides Par 110 [Speed/TorqueMode] setting when a jog command is received
5	Jog-NoRamp	Bypasses the Speed Reference Ramp and S-Curve
6	Trq StopRamp	Overrides Par 110 [Speed/TorqueMode] setting when stopping
7	Trq DsblZSpd	Configures how the drive uses stop dwell time
8	3WireControl	Configures the drive for 3-wire control
10	Motor Dir	Changes direction of the motor rotation
11	Iq Delay	Enables the Torque Current Delay option
12	Jog-NoInteg	Configures the speed regulator's integrator to "hold" when jogging
13	OL ClsLpDsbl	Overload Closeloop Calculation Disable
14	Reserved DM	Reserved for use by the Drive module for "Invert Speed Feedback"
15	Reserved DM	Reserved for use by the Drive module for "Invert Motor Torque Current"
16	Auto Tach Sw	Switches the drive to secondary motor feedback. This bit cannot be set when Par 485 [Motor Ctrl Mode] = 2 "PMag Motor".
17	Aux Pwr Sply	Enables the use of an auxiliary power supply. When set to 1, the Main Control Board (MCB) examines internal 12V DC power to see when it is energized. When set to 0, the MCB examines the voltage of the DC Bus. This bit enables the MCB to remain energized when 3-Ø voltage is de-energized.
18	SpdRegPreset	When set to "1", this bit selects Par 303 [Motor Torque Ref] for the Speed Regulator preset. When set to "0", Par 87 [SReg Trq Preset] is selected.
19	Slip Comp	Enables slip compensation
20	Motor OL Ret	Enables motor over-load retention
21	Inrt TrqLPEn	Enables the Inertia Compensation Torque Output Low Pass Filter
23	PITrim EnOut	Enables the output of Process Trim
24	Time Axis En	Ramps the output of the Time Function Generator
25	MC Atune En	Enables Autotune tests
26	Trq Trim En	Enables Torque Trim
27	Pwr Diag En	Enables the Power Diagnostic test
28	PM Offset En	Enables the Permanent Magnet Motor offset test
29	Slip Test En	Enables the Slip Frequency Auto-Tune function
30	Sys Inrt En	Enables the System Inertia test
31	Ids Test Enable	Enables the flux producing (d-axis) current test for the Field Oriented Control (FOC) encoder mode

No.	Name Description	Values		Linkable	Read-Write	Data Type
154	**Stop Dwell Time** Sets an adjustable delay time between detecting zero speed and disabling the speed and torque regulators, when responding to a stop command. For more information, please see Stop Dwell Time on page 168. **Important:** Consult industry and local codes when setting the value of this parameter.	Default: Min/Max: Units:	0.0000 0.0000/10.0000 s	Y	RW	Real

155 Logic Status

Displays the status - condition of the drive.

Options	LogixPresent	Spd Ref Act2	Spd Ref Act1	Spd Ref Act0	Reserved	RunCommanded	Start Active	PositionMode	Speed Mode	Torque Mode	Hw Enable On	Spd Commis	MC Commis	MC Active	Above Setpt2	At Setpt 1	Enable On	At Setpt Spd	At Zero Spd	Tach Loss Sw	At Limit	Ready	Flash Mode	Alarm	Faulted	Jogging	Decelerating	Accelerating	Actual Dir	Command Dir	Running	Active
Default	0	0	0	0	0	0	0	0	0	0	0	0	0	0	0	0	0	0	0	0	0	0	0	0	0	0	0	0	0	0	0	0
Bit	31	30	29	28	27	26	25	24	23	22	21	20	19	18	17	16	15	14	13	12	11	10	9	8	7	6	5	4	3	2	1	0

0 = False
1 = True

Bit	Name	Current Function
0	Active	Drive is controlling motor
1	Running	Run command received & controlling motor
2	Command Dir	Commanded direction is forward
3	Actual Dir	Actual motor direction is forward
4	Accelerating	Motor is increasing speed
5	Decelerating	Motor is decreasing speed
6	Jogging	Jog command received & controlling motor
7	Faulted	Exception event that causes a fault has occurred
8	Alarm	Exception event that causes an alarm has occurred
9	Flash Mode	Flash upgrade in progress
10	Ready	Enable input is high & drive is fault free
11	At Limit	Speed, Power, Current or Torque is being limited, refer to Par 304
12	Tach Loss SW	Failure is detected in primary speed or position feedback device & drive has switched to secondary device
13	At Zero Spd	Speed feedback is within limits defined in Par 160
14	At Setpt Spd	Speed feedback is within limits defined in Par 41 and Par 171

Bit	Name	Current Function
15	Enable On	
16	At Setpt 1	Par 172 value is within limits defined by Par 173 and Par 174
17	Above Setpt 2	Par 175 value is within limits defined by Par 176 and Par 177
18	MC Active	Drive is controlling motor (same as enabled)
19	MC Commis	Motor control commissioning in progress
20	Spd Commis	Speed control commissioning in progress
21	Hw Enable On	
22	Torque Mode	Par 110 value is 2, 3, 4, 5 or 6
23	Speed Mode	Par 110 value is 1 & position control is not enabled
24	Position Mode	Position control active & *Par 110* value is not 2, 3, 4, 5 or 6
25	Start Active	Start command received & controlling motor
26	Command Run	Run command received
28-30	Spd Ref Act1-3	
31	LogixPresent	

156 Start Inhibits

Indicates which condition is preventing the drive from starting or running.

- Bit 16 "GateShutDown" is set when the shunt jumper in the 16-15 position on the Main Control board is missing and a Safe-Off option board is not present.
- Bit 17 "SafeOff Enbl" is set when the HW Enable jumper (P22) is in the Bypass position (on pins 1&3) and the Safe-Off option board is present. A HW Enable is required when a safe-off board is used.
- Bit 21 "Sleep Stop" is set when the sleep mode has stopped the drive.
- Bit 22 "Sleep Config" is set when sleep mode has not been setup correctly. Check the sleep/wake levels and digital input configuration.

Note: Bit 18 "MC Config" was added to this parameter for firmware version 2.003. Added bit 20 "High BusVolt" for firmware version 4.001. Bits 21 and 22 were added for firmware version 5.002.

Options	Reserved	Reserved	Reserved	Reserved	Reserved	Reserved	Reserved	Reserved	Reserved	Sleep Config	Sleep Stop	High BusVolt	Reserved	MC Config	SafeOff Enbl	GateShutDown	PositFdbkSel	PM Mtr Fdbk	Motin Shtdwn	Digln Config	Bus PreChrg	Encoder PPR	Jog	Start	Flash Upgrd	Power EE	Power Loss	SW I Lim Stp	SW Coast Stp	SW Ramp Stop	No Enable	Faulted
Default	x	x	x	x	x	x	x	x	x	0	0	0	x	0	0	0	0	0	0	0	0	0	0	0	0	0	0	0	0	0	0	0
Bit	31	30	29	28	27	26	25	24	23	22	21	20	19	18	17	16	15	14	13	12	11	10	9	8	7	6	5	4	3	2	1	0

0 = False
1 = True

157 Logic Ctrl State

Indicates which logic control functions are enabled.

- Bit 22 "S Tst FulSpd" set to "1" indicates that the Slip Auto Tune function is active
- Bit 23 "Slip Test En" set to "1" indicates that the drive is at speed for the Auto Tune function.

Notes: Bits 22 and 23 were added for firmware version 3.001. Bit 14 "DC Brake En" is not functional.

Options	ProcsTrim En	Cmd Dir Upol	Lgx I/O Cnx	Lgx Run Mode	Reserved	VP Gate Enbl	MC Gate Enbl	Ramp Hold	Slip Test En	S Tst FulSpd	PM Offset Rq	Mtr Dir Req	Pwr Diag Req	MC Atune Req	FTD Ramp EN	MC En Req	RThru Flux	DC Brake En	Mtr Sim Mode	RThru Coast	CurrRef En	Forced Spd	Trq Ref En	Spd Reg En	SReg IntgHld	CurLim Stop	J Tst FulSpd	Inert Tst En	PositionEnbl	SRef SCrv En	SRef Ramp En	Spd Ref En
Default	0	0	0	0	x	0	0	0	0	0	0	0	0	0	0	0	0	0	0	0	0	0	0	0	0	0	0	0	0	0	0	0
Bit	31	30	29	28	27	26	25	24	23	22	21	20	19	18	17	16	15	14	13	12	11	10	9	8	7	6	5	4	3	2	1	0

0 = False
1 = True

No.	Name Description	Values	Linkable	Read-Write	Data Type

158 Drive Logic Rslt

This is the logic output of the logic parser that combines the outputs from the DPI ports and the DriveLogix controller to determine drive control based on the masks and owners. The control bits are reflected in Par 152 [Applied LogicCmd] bits 16-31.

Options	Reserved	Spd Ref Sel 2	Spd Ref Sel 1	Spd Ref Sel 0	Reserved	Reserved	Coast Stop	CurrLim Stop	Jog 2	Reserved	Reverse	Forward	Clear Fault	Jog 1	Start	Normal Stop	Reserved	Spd Ref Sel 2	Spd Ref Sel 1	Spd Ref Sel 0	Reserved	Reserved	Coast Stop	CurrLim Stop	Jog 2	Reserved	Reverse	Forward	Clear Fault	Jog 1	Start	Normal Stop
Default	x	0	0	0	x	x	0	0	0	x	0	0	0	0	0	0	x	0	0	0	x	x	0	0	0	x	0	0	0	0	0	0
Bit	31	30	29	28	27	26	25	24	23	22	21	20	19	18	17	16	15	14	13	12	11	10	9	8	7	6	5	4	3	2	1	0

0 = False
1 = True

159 DigIn ConfigStat

This parameter indicates the status of the digital inputs.

- If 8 "Sleep Config" is displayed, the sleep mode has not been set up correctly. Check the values of parameters 280 [Wake Level] and 282 [Sleep Level] to verify that they are not set outside the bounds of the analog input. Also verify the digital input configuration. See Figure 9 on page 170 for more information on Sleep / Wake Mode configuration.

Note: Value 8 "Sleep Config" was added for firmware version 5.002.

Default: 0 = "DigIn Ok"

Options:
0 = "DigIn Ok"
1 = "2 Run/Starts"
2 = "Start NoStop"
3 = "Run+Latched"
8 = "Sleep Config"
4 = "Strt+UnLatch"
5 = "2 Jog1's"
6 = "2 Jog2's"
7 = "2Fwd's/Rev's"

160 Zero Speed Lim

Establishes a band around zero speed that is used to determine when the drive considers the motor to be at zero speed.

Default:	17.6400	Y	RW	Real
Min/Max:	0.0000/882.0000			
Units:	rpm			
Scale:	Par 4 [Motor NP RPM] = 1.0 P.U.			

161 Logic TP Sel

Enter or write a value to select logic status indication displayed in Par 162 [Logic TP Data].

Default: 0 = "Zero"

Options:
0 = "Zero"
1 = "Avg Spd Ref"
2 = "Avg Spd Fdbk"
3 = "LastStopMode"
-(0=None)
-(1=Coast)
-(2=Current Limit)
-(3=Ramp)
-(4=Torque Mode)
4 = "Spd Ref Sel"
5 = "Start State"
6 = "Run State"
7 = "Stop State"
8 = "PrChrg Logic"
9 = "Meas State"
10 = "Data State"
11 = "Diag State"
12 = "MC CalcState"
13 = "Task 1 time"
14 = "Task 1 max"
15 = "Task 2 time"
16 = "Task 2 max"
17 = "Task 3 time"
18 = "Task 3 max"
19 = "BkGnd Time"
20 = "BkGnd Max"
21 = "Task 1 %"
22 = "Task 2 %"
23 = "Task 3 %"
24 = "BkGnd %"
25 = "RThru State"
26 = "RThru Timer"
27 = "Health State"
28 = "Sys Friction"
29 = "Iq proc time"
30 = "Enable Inhib"
31 = "DI Src Index"
32 = "DI SrcRevIdx"
33 = "DI TrendTrig"
34 = "DI Prchg Ena"
35 = "Enable State"
36 = "LID Revision"
37 = "DI MOP Incr"
38 = "DI MOP Decr"
39 = "DI MOP Reset"
40 = "Cmd Term Blk"
41 = "Cmd DPI 1"
42 = "Cmd DPI 2"
43 = "Cmd DPI 3"
44 = "Cmd DPI 4"
45 = "Cmd DPI 5"
46 = "Cmd DPI 6"
47 = "Cmd ELC"
48 = "Cmd Debugger"
49 = "Reserved"
50 = "SelSw Posit"
51 = "DI SelSw 00"
52 = "DI SelSw 01"
53 = "DI SelSw 02"
54 = "DI SelSw 03"
55 = "Ids Motoring"
56 = "IqsRef Motor"
57 = "Ids Regen"
58 = "IqsRef Regen"

162 Logic TP Data

Displays the indication selected by Par 161 [Logic TP Sel].

Default:	0.0000		RO	Real
Min/Max:	-/+2200000000.0000			

163 Stop Oper TP Sel

Enter or write a value to select data displayed in Par 164 [StpOper TPData] at the time of the last initiated stop.

Default: 0 = "Zero"

Options:
0 = "Zero"
1 = "Logic State"
2 = "Logic Input"
3 = "Lcl In State"
4 = "Logic Status"
5 = "Run Inhibit"
6 = "Logic Ctrl"
7 = "Mtr Ctrl Cmd"
8 = "Mtr Ctrl Ack"
9 = "Reserved"
10 = "Flt Status 1"
11 = "Flt Status 2"
12 = "Motor Speed"
13 = "Avg Spd Fdbk"
14 = "ZM1 Spd Fdbk"
15 = "Speed Ref"
16 = "Avg Spd Ref"
17 = "ZM1 Spd Ref"
18 = "SReg PI Out"
19 = "Trq Ref"
20 = "TrqRef Stat"
21 = "DC Bus Volts"
22 = "Motor Volts"
23 = "Mtr Current"
24 = "Motor Flux"
25 = "Motor Freq"
26 = "Motor Power"
27 = "Flt Status 3"

No.	Name Description	Values	Linkable	Read-Write	Data Type
164	**StopOper TP Data** Displays the data selected by Par 163 [Stop Oper TP Sel].	Default: 0 Min/Max: -/+2147483648		RO	32-bit Integer
165	**Tune Test Status** Indicates which test (if any) is in progress. • Value 7 is retained and is used to continue the Auto Tune test from the last point at which it was stopped. Notes: Value 5 was changed to "Reserved" for firmware version 2.004. Value 7 "Mtr+Sys J" was changed to "Slip Test" for firmware version 3.001. Value 8 "Find Home" was added for firmware version 3.003.	Default: 0 = "None" Options: 0 = "None" 1 = "MC Autotune" 2 = "Power Diag" 3 = "Motor Direct" 4 = "PM Offset" 5 = "Reserved" 6 = "Sys Inertia" 7 = "Slip Test" 8 = "Find Home"			
166 A	**Motor Ctrl Cmmd** Displays the command bits to the Motor Control Processor from the Velocity Processor.				

Options	Reserved	Reserved	Reserved	Reserved	Reserved	Reserved	Reserved	Reserved	Reserved	Reserved	Reserved	Reserved	Reserved	Reserved	Reserved	Reserved	Fault Reset	Reserved	Reserved	Reserved	Reserved	Reserved	Reserved	Reserved	Reserved	Reserved	Base Block	Reserved	Reserved	Torque Run	Flux Run	CP Enable
Default	x	x	x	x	x	x	x	x	x	x	x	x	x	x	x	x	0	x	x	x	x	x	x	x	x	0	0	0	0	0	0	0
Bit	31	30	29	28	27	26	25	24	23	22	21	20	19	18	17	16	15	14	13	12	11	10	9	8	7	6	5	4	3	2	1	0

0 = False
1 = True

No.	Name Description	Values	Linkable	Read-Write	Data Type
167 A	**Motor Ctrl Ackn** Displays the Motor Control Processor's acknowledgment to the Velocity Processor for the Motor Control Command bits.				

Options	Reserved	Reserved	Reserved	Reserved	Reserved	Reserved	Reserved	Reserved	Reserved	Reserved	Reserved	Reserved	Reserved	Reserved	Reserved	Reserved	Fault Reset	Reserved	Reserved	Reserved	Reserved	Reserved	Reserved	Reserved	Reserved	Reserved	Reserved	Power Diag	Precharge	Torque Run	Flux Run	CP Enable
Default	x	x	x	x	x	x	x	x	x	x	x	x	x	x	x	x	0	x	x	x	x	x	x	x	x	x	x	0	0	0	0	0
Bit	31	30	29	28	27	26	25	24	23	22	21	20	19	18	17	16	15	14	13	12	11	10	9	8	7	6	5	4	3	2	1	0

0 = False
1 = True

No.	Name Description	Values	Linkable	Read-Write	Data Type
168	**Normal Stop Mode** Sets the method of stopping the drive when a stop command is given. Normal Stop command and the RUN input changing from true to false will command a Normal Stop. Ramp Stop = decelerates to zero speed at the decal rate CurLim Stop = Max torque / current applied until zero speed Coast Stop = power removed from motor, motor coasts to zero	Default: 0 = "Ramp Stop" Options: 0 = "Ramp Stop" 1 = "CurLim Stop" 2 = "Coast Stop"			
169	**SrLss ZeroSpdLim** Functionally equivalent to Par 160 [Zero Speed Lim], but is used exclusively in Sensorless speed mode. The value is automatically set from Par 3 [Motor NP Hertz], Par 4 [Motor NP RPM] or Par 7 [Motor Poles]. The automatic setting corresponds to the rated slip speed of the motor (synchronous speed - nameplate speed). The value can be manually set.	Default: 49.9975 Min/Max: 0.0000/875.0000 Units: rpm	Y	RW	Real
170 A	**Flying StartGain** This parameter is currently not used. Note: This parameter was added for firmware version 2.003.	Default: 4000 Min/Max: 0/32767		RW	16-bit Integer
171	**Set Speed Lim** Creates a tolerance - hysteresis band around the value in Par 41 [Limited Spd Ref] for comparison to average speed feedback. The comparison controls bit 14 "At Setpt Spd" of Par 155 [Logic Status]. In general bit 14 "At Setpt Spd" turns on when the feedback is within the tolerance of the reference. • Turn-on level for rising feedback = Limited Spd Ref - Limit. • Turn-off level for rising feedback = Limited Spd Ref + 2(Limit). • Turn-on level for falling feedback = Limited Spd Ref + Limit. • Turn-off level for falling feedback = Limited Spd Ref - 2(Limit).	Default: 17.6400 Min/Max: 0.0000/882.0000 Units: rpm Scale: Par 4 [Motor NP RPM] = 1.0 P.U.	Y	RW	Real
172	**Setpt 1 Data** Provides data for comparison to Par 173 [Setpt1 TripPoint], driving bit 16 "At Setpt 1" of Par 155 [Logic Status]. For more information, please see Setpt 1 Data on page 167.	Default: 0.0000 Min/Max: -/+8.0000 P.U. Units: P.U.	Y	RW	Real
173	**Setpt1 TripPoint** Provides the midpoint for operation of bit 16 "At Setpt 1" of Par 155 [Logic Status].	Default: 0.1000 Min/Max: -/+8.0000 P.U. Units: P.U.	Y	RW	Real
174	**Setpt 1 Limit** Creates a tolerance - hysteresis band around the value in Par 173 [Setpt1 TripPoint]. • Turn-on level for ascending data = TripPoint - Limit. • Turn-off level for ascending data = TripPoint + 2(Limit). • Turn-on level for descending data = TripPoint + Limit. • Turn-off level for descending data = TripPoint - 2(Limit).	Default: 0.0100 Min/Max: 0.0000/0.5000 Units: P.U.	Y	RW	Real
175	**Setpt 2 Data** Provides data for comparison to Par 176 [Setpt2 TripPoint], driving bit 17 "Above Setpt 2" of Par 155 [Logic Status]. For more information, please see Setpt 2 Data on page 167.	Default: 0.0000 Min/Max: -/+8.0000 P.U. Units: P.U.	Y	RW	Real
176	**Setpt2 TripPoint** Provides the midpoint for operation of bit 17 "Above Setpt 2" of Par 155 [Logic Status].	Default: 0.2000 Min/Max: -/+8.0000 P.U. Units: P.U.	Y	RW	Real

No.	Name Description	Values		Linkable	Read-Write	Data Type
177	**Setpt 2 Limit** Creates a tolerance - hysteresis band around the value in Par 176 [Setpt2 TripPoint]. For positive setpoints: • Turn-on level = TripPoint • Turn-off level = TripPoint - Limit. For negative setpoints: • Turn-on level = TripPoint • Turn-off level = TripPoint + Limit.	Default: Min/Max: Units:	0.0100 0.0000/0.5000 P.U.	Y	RW	Real
178	**PI TP Sel** Enter or write a value to select Process Control PI data displayed by Par 179 [PI TP Data]. The values for options 1 & 8 were changed to "Reserved" for firmware version 2.004.	Default: Options:	0 = "Zero" 0 = "Zero" 1 = "Reserved" 2 = "LPF Output" 3 = "P Gain Term" 4 = "Reg Output" 5 = "On Intg Lim" 6 = "On Out Limit" 7 = "Status Hold" 8 = "Reserved" 9 = "Reset Status" 10 = "Time Axis En" 11 = "Enbl Status" 12 = "Out Max Lim" 13 = "Out Min Lim"			
179	**PI TP Data** Displays the data selected by Par 178 [PI TP Sel].	Default: Min/Max: Units:	0.0000 -/+8.0000 P.U. P.U.		RO	Real
180	**PI Output** The final output of the Process Control regulator. A value of 1 can represent either base motor speed, motor rated torque, or 100% for some external function.	Default: Min/Max: Units:	0.0000 -/+8.0000 P.U. P.U.		RO	Real
181	**PI Reference** The reference input for the process control regulator. A value of 1 can represent either base motor speed, motor rated torque, or 100% for some external function.	Default: Min/Max: Units:	0.0000 -/+8.0000 P.U. P.U.	Y	RW	Real
182	**PI Feedback** The feedback input for the process control regulator. A value of 1 can represent either base motor speed, motor rated torque, or 100% for some external function.	Default: Min/Max: Units:	0.0000 -/+8.0000 P.U. P.U.	Y	RW	Real
183	**PI Error** Displays the error of the process trim reference minus the process trim feedback.	Default: Min/Max: Units:	0.0000 -/+8.0000 P.U. P.U.		RO	Real
184	**PI Lpass Filt BW** Sets the bandwidth of a single pole filter applied to the error input of the Process Control regulator. The input to the filter is the difference between Par 181 [PI Reference] and Par 182 [PI Feedback]. The output of this filter is used as the input to the process control regulator.	Default: Min/Max: Units:	0.0000 0.0000/500.0000 rad/s	Y	RW	Real
185	**PI Preload** Presets the integrator of the Process Control regulator.	Default: Min/Max: Units:	0.0000 -/+8.0000 P.U. P.U.	Y	RW	Real
186	**PI Prop Gain** Controls the proportional gain of the Process Control regulator. If the proportional gain is 1.0, the regulator output equals 1 P.U. for 1 P.U. error.	Default: Min/Max:	8.0000 0.0000/200.0000	Y	RW	Real
187	**PI Integ Time** Controls the integral gain of the Process Control regulator. If the integrator time is 1.0, the regulator output equals 1 P.U. in 1 second for 1 P.U. error.	Default: Min/Max: Units:	8.0000 0.0000/4000.0000 /s	Y	RW	Real
188	**PI Integ HLim** The high limit of the integral gain channel for the Process Control regulator. A value of 1 can represent either base motor speed, motor rated torque, or 100% for some external function.	Default: Min/Max: Units:	0.1000 0.0000/8.0000 P.U.	Y	RW	Real
189	**PI Integ LLim** The low limit of the integral gain channel for the Process Control regulator. A value of 1 can represent either base motor speed, motor rated torque, or 100% for some external function.	Default: Min/Max: Units:	-0.1000 -8.0000/0.0000 P.U.	Y	RW	Real
190	**PI Integ Output** Displays the output value of the integral channel of the Process Control regulator. A value of 1 can represent either base motor speed, motor rated torque, or 100% for some external function.	Default: Min/Max: Units:	0.0000 -/+8.0000 P.U. P.U.		RO	Real
191	**PI High Limit** The high limit of the Process Control regulator output. A value of 1 can represent either base motor speed, motor rated torque, or 100% for some external function.	Default: Min/Max: Units:	0.1000 0.0000/8.0000 P.U.	Y	RW	Real
192	**PI Lower Limit** The low limit of the Process Control regulator output. A value of 1 can represent either base motor speed, motor rated torque, or 100% for some external function.	Default: Min/Max: Units:	-0.1000 -8.0000/0.0000 P.U.	Y	RW	Real
196	**ParamAccessLevel** The value of this parameter establishes the level of parameter access for the Human Interface Module (HIM). • Value 0 - Basic grants access to the minimum number of parameters • Value 1 - Advanced grants access to a larger group of parameters	Default: Options:	0 = "Basic" 0 = "Basic" 1 = "Advanced"		RW	16-bit Integer
201	**Language** Selects the display language when using an LCD HIM. Currently, only option 0 - "English" is available.	Default: Options:	0 = "English" 0 = "English" 1 = "Alt Language"		RW	16-bit Integer

No.	Name Description	Values		Linkable	Read-Write	Data Type
202	**Time Axis Rate** Sets rate (1/sec) for the Time Function Generator to ramp from an output of 0 to 1 and from 1 to 0.	Default: Min/Max: Units:	1.0000 0.0100/20.0000 /s	Y	RW	Real
203	**Time Axis Output** The output of the Time Function Generator. When the Time Function Generator is enabled by Par 151 [Logic Command] bit 3 "Time Axis En", or Par 153 [Control Options], bit 24 "Time Axis En", the value of this parameter ramps from 0 to 1 at a rate determined by Par 202 [Time Axis Rate]. Conversely, when the Time Function Generator is disabled, the value of this parameter ramps from 1 to 0.	Default: Min/Max:	0.0000 0.0000/1.0000		RO	Real
204	**LimGen Y axis Mx** Sets Par 207 [Limit Gen Hi Out] and Par 208 [Limit Gen Lo Out] when the absolute value of Par 206 [LimGen X axis In] is greater than or equal to 1.	Default: Min/Max: Units:	0.2500 0.0000/8.0000 P.U.	Y	RW	Real
205	**LimGen Y axis Mn** Sets Par 207 [Limit Gen Hi Out] and Par 208 [Limit Gen Lo Out] when the absolute value of Par 206 [LimGen X axis In] is equal to 0.	Default: Min/Max: Units:	0.0500 0.0000/8.0000 P.U.	Y	RW	Real
206	**LimGen X axis In** The X axis input to the Limit Generator. Typically this parameter is linked to a speed reference or to Par 203 [Time Axis Output].	Default: Min/Max:	Y Y	Y	RW	Real
207	**Limit Gen Hi Out** Displays the positive output of the Limit Generator. When Par 206 [Limit Gen X axis In] is greater than or equal to 1, this value equals Par 204 [Limit Gen Y axis Mx]. When Par 206 [Limit Gen X axis In] is equal to 0, this value equals Par 205 [Limit Gen Y axis Mn]. For values of X Axis input between 0 and 1, the value of this parameter is interpolated from Y axis min. and max. values. Typically it is linked to Par 188 [PI Integ HLim].	Default: Min/Max: Units:	8.0000 0.0000/8.0000 P.U.		RO	Real
208	**Limit Gen Lo Out** Displays the negative output of the Limit Generator. The value of this parameter is the negative of Par 207 [Limit Gen Hi Out]. Typically it is linked to Par 189 [PI Integ LLim].	Default: Min/Max: Units:	-8.0000 -8.0000/0.0000 P.U.		RO	Real

210 PeakDtct Ctrl In

Sets the configuration of the two peak/level detectors. Peak detection (when "set" and "hold" are off) causes the output to capture the peak min./max.

- Bit 2 "Peak1SelHigh" and bit 6 "Peak2SelHigh" determine if the peak/level detector is positive or negative. If the bit is set the detector detects positive peaks or levels above the preset. If the bit is not set the detector detects "valleys" or levels below the preset. The output shows the min. or max. peak.
- Bit 0 "Peak 1 Set" bit is used to reset the output to the value in Par 214 [PeakDtct1 Preset] (default 0). Bit 4 "Peak 2 Set" bit is used to reset the output to the value in Par 218 [PeakDtct2 Preset] (default 0).
- Bit 1 "Peak 1 Hold" is used to hold the output at the present value in Par 214 [PeakDtct1 Preset]. Bit 5 "Peak 2 Hold" is used to hold the output at the present value in Par 218 [PeakDtct2 Preset].

Options	Reserved	Reserved	Reserved	Reserved	Reserved	Reserved	Reserved	Reserved	Reserved	Peak2SelHigh	Peak 2 Hold	Peak 2 Set	Reserved	Peak1SelHigh	Peak 1 Hold	Peak 1 Set
Default	x	x	x	x	x	x	x	x	x	0	0	0	0	0	0	0
Bit	15	14	13	12	11	10	9	8	7	6	5	4	3	2	1	0

0 = False
1 = True

211 PeakDtct Status

Status of peak/level detectors. A peak detector sets its "Change" bit for one scan when it detects a peak. The" Change" bit is off when set or when the "Hold" bit is on.

Options	Reserved	Reserved	Reserved	Reserved	Reserved	Reserved	Reserved	Reserved	Reserved	Reserved	Reserved	Reserved	Reserved	Reserved	Peak 2 Chng	Peak 1 Chng
Default	x	x	x	x	x	x	x	x	x	x	x	x	x	x	0	0
Bit	15	14	13	12	11	10	9	8	7	6	5	4	3	2	1	0

0 = False
1 = True

212	**PkDtct1 In DInt** Integer input to the first peak/level detector.	Default: Min/Max:	0 -/+2147483648	Y	RW	32-bit Integer
213	**PkDtct1 In Real** Floating point input to the first peak/level detector.	Default: Min/Max:	0.0000 -/+2200000000.0000	Y	RW	Real
214	**PeakDtct1 Preset** The first detector (in set or hold modes) compares this value to its input for level detection. When the detector trips (in set mode) it transfers the value of this parameter to its output.	Default: Min/Max:	0.0000 -/+2200000000.0000	Y	RW	Real
215	**PeakDetect1 Out** Output from the first peak/level detector.	Default: Min/Max:	0.0000 -/+2200000000.0000		RO	Real
216	**PkDtct2 In DInt** Integer input to second peak/level detector.	Default: Min/Max:	0 -/+2147483648	Y	RW	32-bit Integer
217	**PkDtct2 In Real** Floating point input to second peak/level detector.	Default: Min/Max:	0.0000 -/+2200000000.0000	Y	RW	Real
218	**PeakDtct2 Preset** The second detector (in set or hold modes) compares this value to its input for level detection. When the detector trips (in set mode) it transfers the value of this parameter to its output.	Default: Min/Max:	0.0000 -/+2200000000.0000	Y	RW	Real

No.	Name Description	Values		Linkable	Read-Write	Data Type
219	**PeakDetect2 Out** Output from the second peak/level detector.	Default: Min/Max:	0.00 0.00/1200.00		RO	Real
221	**Load Estimate** Displays the estimated load torque, which is the side effect of the speed observer and does not include torque to accelerate or decelerate the motor if the inertia input is correct. The value is provided for display purposes.	Default: Min/Max: Units:	0.0 -/+8.0 P.U. P.U.		RO	Real
222	**Mtr Fdbk Sel Pri** Selects primary feedback device. The primary feedback device configuration must not be set to fault on an event in order to allow operational feedback switch over to the alternate feedback device set in Par 223 [Mtr Fdbk Sel Alt]. Notes: Par 485 [Motor Ctrl Mode] must be set to FOC for Sensorless feedback selection to be active. Selection 5 is only available when compatible feedback option card is installed. This parameter was changed to non-linkable for firmware version 3.001.	Default: Options:	0 = "Encoder 0" 0 = "Encoder 0" 4 = "Motor Sim" 1 = "Encoder 1" 5 = "FB Opt Port0" 2 = "Sensorless" 3 = "Reserved"			
223	**Mtr Fdbk Sel Alt** Selects alternate feedback device if the feedback device selected in Par 222 [Mtr Fdbk Sel Pri] fails. Notes: Par 485 [Motor Ctrl Mode] must be set to FOC for Sensorless feedback selection to be active. Selection 5 is only available when compatible feedback option card is installed. This parameter was changed to non-linkable for firmware version 3.001.	Default: Options:	2 = "Sensorless" 0 = "Encoder 0" 4 = "Motor Sim" 1 = "Encoder 1" 5 = "FB Opt Port0" 2 = "Sensorless" 3 = "Reserved"			
224	**TachSwitch Level** Sets the detection level for the automatic tach loss switch-over routine. A drop in feedback speed at this percent of rated speed over 0.5 msec will cause a tach switch from primary to alternate feedback device. This feature is enabled when bit 16 "Auto Tach Sw" in Par 153 [Control Options] is selected. Setting this level lower will make the tach switch detection more sensitive and lower the minimum speed at which a tach switch can occur. Setting this level higher will make the tach switch less sensitive and raise the minimum speed for tach switch detection. Note: This parameter was changed to non-linkable for firmware version 3.001.	Default: Min/Max: Units:	10.0000 5.0000/25.0000 %		RW	Real
225	**Virtual Edge/Rev** Set the edges per revolution (EPR) scaling for calculating motor position. Used in the calculation of the position feedback such as Par 229 [MtrPosit Stimulat].	Default: Min/Max: Units:	4096 10/16777216 EPR		RW	32-bit Integer
226	**Motor Speed Est** Displays the estimated motor speed, calculated when the selected feedback is sensorless or when encoderless ridethrough is enabled.	Default: Min/Max: Units: Scale:	0.0000 -/+14112.0000 rpm Par 4 [Motor NP RPM] = 1.0 P.U.		RO	Real
227	**Motor Posit Est** Summation (or integration) of Par 226 [Motor Speed Est] scaled by the value in Par 225 [Virtual Edge/Rev].	Default: Min/Max:	0 -/+2147483648		RO	32-bit Integer
228	**MtrSpd Simulated** The motor speed output of the motor simulator. The motor simulator provides motor speed information during setup and troubleshooting when actual motor control is not desired or possible. To use the motor simulator, enter a value of 4 in Par 222 [Mtr Fdbk Sel Pri] or Par 223 [Mtr Fdbk Sel Alt].	Default: Min/Max: Units: Scale:	0.0000 -/+14112.0000 rpm Par 4 [Motor NP RPM] = 1.0 P.U.		RO	Real
229	**MtrPosit Simulat** The motor position output of the motor simulator. The motor simulator provides motor position information during setup and troubleshooting when actual motor control is not desired or possible. To use the motor simulator, enter a value of 4 in Par 222 [Mtr Fdbk Sel Pri] or Par 223 [Mtr Fdbk Sel Alt].	Default: Min/Max:	0 -/+2147483648		RO	32-bit Integer
230	**Encdr0 Position** Displays the position feedback (accumulator) from encoder 0. The value changes by a value of four times (4x) the Pulses Per Revolution (PPR) rating of the encoder for each full revolution of the encoder shaft. Used by the Velocity Position Loop (VPL) to close the position loop if position control is selected.	Default: Min/Max:	0 -/+2147483648		RO	32-bit Integer
231	**Encdr0 Spd Fdbk** Displays the speed feedback from encoder 0. Calculated from the change of Par 230 [Encdr0 Position] and Par 232 [Encoder0 PPR].	Default: Min/Max: Units: Scale:	0.0000 -/+14112.0000 rpm Par 4 [Motor NP RPM] = 1.0 P.U.		RO	Real

No.	Name Description	Values		Linkable	Read-Write	Data Type
232	**Encoder0 PPR** Sets the pulse per revolution rating of the feedback device connected to the Encoder 0 input. This parameter must be set to one of the values displayed in bold in Table 232A below.	Default: Min/Max: Units:	1024 10/20000 PPR		RW	16-bit Integer

Table 232A: PPR Rating Values

n =	2^n =	x	mod 75	mod 125	mod 225	mod 375	mod 625	mod1125
0	1		**75**	**125**	**225**	**375**	**625**	**1125**
1	2		**150**	**250**	**450**	**750**	**1250**	**2250**
2	4		**300**	**500**	**900**	**1500**	**2500**	**4500**
3	8		**600**	**1000**	**1800**	**3000**	**5000**	**9000**
4	**16**		**1200**	**2000**	**3600**	**6000**	**10000**	**18000**
5	**32**		**2400**	**4000**	**7200**	**12000**	**20000**	--
6	**64**		--	--	--	--	--	--
7	**128**		--	--	--	--	--	--
8	**256**		--	--	--	--	--	--
9	**512**		--	--	--	--	--	--
10	**1024**		--	--	--	--	--	--
11	**2048**		--	--	--	--	--	--
12	**4096**		--	--	--	--	--	--
13	**8192**		--	--	--	--	--	--
14	**16384**		--	--	--	--	--	--

No.	Name Description	Values	Linkable	Read-Write	Data Type

233 **Encdr 0/1 Config**

Specifies the configuration options for the encoder 0 and encoder 1.

- Bits 0 "Enc0 Filt bt0" through 3 "Enc0 Filt bt3", or Bits 16 "Enc1 Filt bt0" through 19 "Enc1 Filt bt3" configure the encoder input filter (see Table 233A: Encoder Input Filter Settings). The filter requires the input signal to be stable for the specified time period. Input signal transitions within the filter time setting will be ignored. Bits 0-3 and 16-19 add 100ns filtering per stage to encoder inputs.
- Bits 4 "Enc0 4x" and 5 "Enc0 A Phs" or 20 "Enc1 4x" and 21"Enc1 A Phs" determine how the encoder channel A and B signals will be interpreted. Typically, both encoder phases A and B are used so that direction information is available. Par 230 [Encdr0 Position] counts up for forward rotation and down for reverse rotation. If bit 5 is set, then the B phase signal is ignored. As a result, the encoder position will only increase, regardless of rotation direction. Bits 4 and 5 together also determine the number of edges counted per encoder pulse (see Table 233B: Multiplier and Direction Settings). "4x" sampling counts both rise and fall of both A and B encoder phases, hence 4 edges per pulse. In 4x mode, the encoder position will change by four times the encoder pulses per revolution rating (PPR) per encoder revolution (e.g., it increments the value in Par 230 [Encdr0 Position] by 4096 for one revolution of a 1024 PPR encoder).
- Bit 6 "Enc0 Dir" and 22 "Enc1 Dir" inverts the channel A input, thus reversing the direction of the feedback. Note that changes in encoder direction (bit 6 or 22) may require changing Par 153 [Control Options] bit 10 "Motor Dir".
- Bit 7 "Enc0 EdgTime" or bit 23 "Enc1 EdgTime" configures the method of sampling used by the Velocity Position Loop (VPL). Setting the bit chooses "Edge to Edge" sampling, while resetting the bit to zero selects "Simple Difference" sampling. "Simple Difference" sampling calculates speed by examining the difference between pulse counts over a fixed sample time. "Edge to Edge" sampling adjusts the sample time to synchronize with the position count updates from the daughter card - improving the accuracy of the speed calculation.
- Bits 10 "En0SmplRate bt0" through 12 "En0SmplRate bt2" or bits 26 "En1SmplRate bt0" through 28 "En1SmplRate bt2" configure the Finite Impulse Response (FIR) Filter (see Table 233C: FIR Filter Settings). This setting reduces the effect of noisy feedback on the system. Refer to the "Speed/Position Feedback" section of the *PowerFlex® 700S with Phase II Control Reference Manual*, publication PFLEX-RM003 for details.

Note: Bit 27 is set to 0 = False by default for firmware version 1.11 and is set to 1 = True by default for firmware version 2.003.

Options	Reserved	Reserved	Reserved	En1SmplRt b2	En1SmplRt b1	En1SmplRt b0	Reserved	Reserved	Enc1 EdgTime	Enc1 Dir	Enc1 A Phs	Enc1 4x	Enc1 Filt b3	Enc1 Filt b2	Enc1 Filt b1	Enc1 Filt b0	Reserved	Reserved	Reserved	En0SmplRt b2	En0SmplRt b1	En0SmplRt b0	Reserved	Reserved	Enc0 EdgTime	Enc0 Dir	Enc0 A Phs	Enc0 4x	Enc0 Filt b3	Enc0 Filt b2	Enc0 Filt b1	Enc0 Filt b0	
Default	x	x	x	0	1	1	x	x	1	0	0	1	1	0	1	0	x	x	x	0	1	1	x	x	1	0	0	1	1	0	1	0	0 = False
Bit	31	30	29	28	27	26	25	24	23	22	21	20	19	18	17	16	15	14	13	12	11	10	9	8	7	6	5	4	3	2	1	0	1 = True

Table 233A: Encoder Input Filter Settings

Bit 3/19	2/18	1/17	0/16	Encoder Bit Filter Settings
0	0	0	0	Filter disabled
0	0	0	1	100 ns filter
0	0	1	0	200 ns filter
0	0	1	1	300 ns filter
0	1	0	0	400 ns filter
0	1	0	1	500 ns filter
0	1	1	0	600 ns filter
0	1	1	1	700 ns filter
1	0	0	0	800 ns filter (default setting)
1	0	0	1	900 ns filter
1	0	1	0	1000 ns filter
1	0	1	1	1100 ns filter
1	1	0	0	1200 ns filter
1	1	0	1	1300 ns filter
1	1	1	0	1400 ns filter
1	1	1	1	1500 ns filter

Table 233B: Multiplier and Direction Settings

Bit 5/21	4/20	Mult	Directions	Comments
0	0	2x	fwd/rev	Counts rise/fall of phase A, phase B only used to find direction
0	1	4x	fwd/rev	Counts rise/fall of both A and B phases (default setting)
1	0	1x	fwd only	Counts rise of phase A. Phase B ignored.
1	1	2X	fwd only	Counts rise of phase A. Phase B ignored.

Table 233C: FIR Filter Settings

Bit 12/28	11/27	10/26	Taps
0	0	0	1
0	0	1	2
0	1	0	4
0	1	1	8
1	0	0	16
1	0	1	32
1	1	0	64
1	1	1	127

234 **Encdr 0/1 Error**

Indicates the error status of the encoder 0 and encoder 1.

Note: Bit 4 was changed to "Reserved" for firmware version 2.004.

Options	Reserved	Reserved	Reserved	Reserved	Reserved	Reserved	Reserved	Reserved	Reserved	Reserved	Reserved	Reserved	Enc1 PhseLev	Enc1 PhseLos	Enc1 QuadLos	Enc1 Missing	Reserved	Reserved	Reserved	Reserved	Reserved	Reserved	Reserved	Reserved	Reserved	Reserved	Reserved	Reserved	Enc0 PhseLev	Enc0 PhseLos	Enc0 QuadLos	Enc0 Missing	
Default	x	x	x	x	x	x	x	x	x	x	x	x	0	0	0	0	x	x	x	x	x	x	x	x	x	x	x	x	0	0	0	0	0 = False
Bit	31	30	29	28	27	26	25	24	23	22	21	20	19	18	17	16	15	14	13	12	11	10	9	8	7	6	5	4	3	2	1	0	1 = True

235	**RegisLtch0 Value** Displays the registration data of port 0. Indicates the position reference counter value latched by the external strobes. The strobe signal used to trigger the latch is configurable by Par 236 [RegisLtch 0/1 Cnfg].	Default: Min/Max:	0 -/+2147483648		RW	32-bit Integer

No.	Name Description	Values	Linkable	Read-Write	Data Type

236 **RegisLtch 0/1Cnfg**

Configures the registration latch at port 0 or port 1 to be used with Encoder 0 or Encoder 1, respectively.

- Bit 0 "RL0 Encoder 1" selects the encoder for the input source of latched data. Setting bit 0 selects encoder 1, resetting the bit to zero selects encoder 0.
- Bits 1 "RL0 TrgSrc0" and 2 "RL0 TrgSrc1" select the trigger source (see Table 236A: Encoder0 Trigger Source Settings).
- Bits 3 "RL0 TrgEdge0", 4 "RL0 TrgEdge1", 19 "RL1 TrgEdge0" and 20 "RL1 TrgEdge1" select which edges signal the position (see Table 236C: Edge Selection Settings).
- Bits 5 "RL0 Dir Rev", 6 "RL0 Dir Fwd", 21 "RL1 Dir Rev" and 22 "RL1 Dir Fwd" set the direction of position capture (see Table 236D: Trigger Direction Settings).
- Bits 8 "SL DI Filt 0", 9 "SL DI Filt 1", 10 "SL DI Filt 2", and 11 "SL DI Filt 3" configure a filter for the digital input 1 and 2 (see Table 236E: Filter Settings). The filter requires the input signal to be stable for the specified time period. Input transitions within the filter time setting will be ignored. Bits 8-11 add 100ns filter per stage to external trigger.
- 17 "RL1 TrgSrc0" and 18 "RL1 TrgSrc1" select the trigger source (see Table 236B: Encoder1 Trigger Source Settings).
- Bit 0 &16 - off = Enc0 input to latch, on = Enc1 input to latch.

Options	Reserved	Reserved	Reserved	Reserved	Reserved	Reserved	Reserved	Reserved	Reserved	RL1 Dir Fwd	RL1 Dir Rev	RL1 TrgEdge1	RL1 TrgEdge0	RL1 TrgSrc1	RL1 TrgSrc0	RL1 Encoder1	Reserved	Reserved	Reserved	Reserved	SL DI Filt 3	SL DI Filt 2	SL DI Filt 1	SL DI Filt 0	Reserved	RL0 Dir Fwd	RL0 Dir Rev	RL0 TrgEdge1	RL0 TrgEdge0	RL0 TrgSrc1	RL0 TrgSrc0	RL0 Encoder1	
Default	x	x	x	x	x	x	x	x	x	0	0	0	0	0	0	0	x	x	x	x	0	0	0	0	x	1	1	0	0	0	1	1	0 = False
Bit	31	30	29	28	27	26	25	24	23	22	21	20	19	18	17	16	15	14	13	12	11	10	9	8	7	6	5	4	3	2	1	0	1 = True

Table 236A: Encoder0 Trigger Source Settings

Bit	2	1	
	0	0	Encoder 0 Z-pulse AND Ext Trig A
	0	1	Ext Trig B (Digital Input 2)
	1	0	Ext Trig A (Digital Input 1)
	1	1	Encoder 0 (Primary Encoder) Z-pulse

Note: When the Z-pulse is selected as a trigger source, registration latch port 0 is used for Encoder0 regardless of the setting of bit 0 "RL0 Encoder1".

Table 236B: Encoder1 Trigger Source Settings

Bit	18	17	
	0	0	Encoder 1 Z-pulse AND Ext Trig A
	0	1	Ext Trig B (Digital Input 2)
	1	0	Ext Trig A (Digital Input 1)
	1	1	Encoder 1 (Secondary Encoder) Z-pulse

Note: When the Z-pulse is selected as a trigger source, registration latch port 1 is used for Encoder1 regardless of the setting of bit 16 "RL1 Encoder1".

Table 236C: Edge Selection Settings

Bit	4/20	3/19	
	0	0	Capture on rising edge
	0	1	Capture on falling edge
	1	0	Capture on both edges
	1	1	Disable capture

Table 236D: Trigger Direction Settings

Bit	6/22	5/21	
	0	0	Not Configured
	0	1	Reverse
	1	0	Forward
	1	1	Both Directions

Table 236E: Filter Settings

Bit	11	10	9	8	Input Filter Setting
	0	0	0	0	Filter disabled
	0	0	0	1	100 ns filter
	0	0	1	0	200 ns filter
	0	0	1	1	300 ns filter
	0	1	0	0	400 ns filter
	0	1	0	1	500 ns filter
	0	1	1	0	600 ns filter
	0	1	1	1	700 ns filter
	1	0	0	0	800 ns filter (default setting)
	1	0	0	1	900 ns filter
	1	0	1	0	1000 ns filter
	1	0	1	1	1100 ns filter
	1	1	0	0	1200 ns filter
	1	1	0	1	1300 ns filter
	1	1	1	0	1400 ns filter
	1	1	1	1	1500 ns filter

237 **RegisLtch0/1 Ctrl**

Configures the control for registration latch 0 and 1.

- Set bit 0 "RL0 Arm Req" and bit 16 "RL1 Arm Req" to arm the registration logic for the next trigger event. The particular latch will be armed and ready to be strobed on the next occurrence of the trigger input.
- Set bit 1 "RL0 DisarmReq" and bit 17 "RL1 DisarmReq" to disarm the registration logic for next trigger event.

After the registration is captured, bit 0 "RL0 Arm Req" and bit 16 "RL1 Arm Req" automatically resets back to 0 after found. Bit 1 "RL0 DisarmReq" and bit 17 "RL1 DisarmReq" are only needed to disarm a registration latch that has not been found yet. Setting bits 1 and 17 will clear the bits 0 and 6. Setting bits 0 and 6 sets bits 0 "RL0 Armed" and bit 16 "RL1 Armed" and clears bits 1 "RL0 Found" and bit 17 "RL1 Found" of Par 238 [RegisLtch0/1Stat].

Options	Reserved	Reserved	Reserved	Reserved	Reserved	Reserved	Reserved	Reserved	Reserved	Reserved	Reserved	Reserved	Reserved	Reserved	RL1 DisarmReq	RL1 Arm Req	Reserved	Reserved	Reserved	Reserved	Reserved	Reserved	Reserved	Reserved	Reserved	Reserved	Reserved	Reserved	Reserved	Reserved	RL0 DisarmReq	RL0 Arm Req	
Default	x	x	x	x	x	x	x	x	x	x	x	x	x	x	0	0	x	x	x	x	x	x	x	x	x	x	x	x	x	x	0	0	0 = False
Bit	31	30	29	28	27	26	25	24	23	22	21	20	19	18	17	16	15	14	13	12	11	10	9	8	7	6	5	4	3	2	1	0	1 = True

No.	Name Description	Values	Linkable	Read-Write	Data Type

238 **RegisLtch0/1Stat**

Indicates the control status of registration latch 0 and 1.

- Bit 0 "RL0 Armed" and bit 16 "RL1 Armed" indicates the registration latch is armed.
- Bit 1 "RL0 Found" and bit 17 "RL1 Found" indicates the registration event has triggered the latch.
- Rising edge of 'Arm request' will set the 'Armed' status bit.
- Rising edge of 'Disarm request' will clear the 'Armed' status bit.

Options	Reserved	Reserved	Reserved	Reserved	Reserved	Reserved	Reserved	Reserved	Reserved	Reserved	Reserved	Reserved	Reserved	Reserved	RL1 Found	RL1 Armed	Reserved	Reserved	Reserved	Reserved	Reserved	Reserved	Reserved	Reserved	Reserved	Reserved	Reserved	Reserved	Reserved	Reserved	RL0 Found	RL0 Armed
Default	x	x	x	x	x	x	x	x	x	x	x	x	x	x	0	0	x	x	x	x	x	x	x	x	x	x	x	x	x	x	0	0
Bit	31	30	29	28	27	26	25	24	23	22	21	20	19	18	17	16	15	14	13	12	11	10	9	8	7	6	5	4	3	2	1	0

0 = False
1 = True

239 **RegisLtch1 Value**

Displays the registration data of port 1. Indicates the position reference counter value latched by the external strobes. The strobe signal used to trigger the latch is configurable by Par 236 [RegisLtch 0/1Cnfg].

Default: 0
Min/Max: -/+2147483648
Linkable: | Read-Write: RO | Data Type: 32-bit Integer

240 **Encdr1 Position**

Displays the position feedback (accumulator) from encoder 1. The value changes by a value of four times (4x) the Pulses Per Revolution (PPR) rating of the encoder for each full revolution of the encoder shaft. Used by the VPL to close the position loop if position control is selected.

Default: 0
Min/Max: -/+2147483648
Linkable: | Read-Write: RO | Data Type: 32-bit Integer

241 **Encdr1 Spd Fdbk**

Displays the speed feedback from encoder 1. Calculated from the change of Par 240 [Encdr1 Position] and Par 242 [Encoder1 PPR].

Default: 0
Min.Max: -/+14112.0000
Units: rpm
Scale: Par 4 [Motor NP RPM] = 1.0 P.U.
Linkable: | Read-Write: RO | Data Type: Real

242 **Encoder1 PPR**

Sets the pulse per revolution rating of the feedback device connected to the Encoder 1 input. This parameter must be set to one of the values displayed in bold in Table 242A below.

Default: 1024
Min/Max: 10/20000
Units: PPR
Linkable: | Read-Write: RW | Data Type: 16-bit Integer

Table 242A: PPR Rating Values

n =	2^n =	x	mod 75	mod 125	mod 225	mod 375	mod 625	mod1125
0	1		**75**	**125**	**225**	**375**	**625**	**1125**
1	2		**150**	**250**	**450**	**750**	**1250**	**2250**
2	4		**300**	**500**	**900**	**1500**	**2500**	**4500**
3	8		**600**	**1000**	**1800**	**3000**	**5000**	**9000**
4	**16**		**1200**	**2000**	**3600**	**6000**	**10000**	**18000**
5	**32**		**2400**	**4000**	**7200**	**12000**	**20000**	--
6	**64**		--	--	--	--	--	--
7	**128**		--	--	--	--	--	--
8	**256**		--	--	--	--	--	--
9	**512**		--	--	--	--	--	--
10	**1024**		--	--	--	--	--	--
11	**2048**		--	--	--	--	--	--
12	**4096**		--	--	--	--	--	--
13	**8192**		--	--	--	--	--	--
14	**16384**		--	--	--	--	--	--

No.	Name Description	Values	Linkable	Read-Write	Data Type
245	**Spd Fdbk TP Sel** Enter or write a value to select the data displayed in Par 246 [Spd Fdbk TP RPM] and Par 247 [Spd Fdbk TP Data]. Note: Option values 5 - 15 were changed to "Reserved" and option 41 "First Diff" was added for firmware version 2.004.	Default: 0 = "Zero" Options: 0 = "Zero" 1 = "Clock Time" 2 = "InactvFbkDev" 3 = "ActiveFbkDev" 4 = "MCP Fdbk Dev" 5 = "Reserved" 6 = "Reserved" 7 = "Reserved" 8 = "Reserved" 9 = "Reserved" 10 = "Reserved" 11 = "Reserved" 12 = "Reserved" 13 = "Reserved" 14 = "Reserved" 15 = "Reserved" 16 = "MCP PPR" 17 = "MCP 2^n" 18 = "E0 Edge Time" 19 = "E0 dEdge" 20 = "E0 dTime" 21 = "E0 EPR" 22 = "E0 Edge Mode" 23 = "E0 nMax" 24 = "E0 Error" 25 = "E0 Qloss pk" 26 = "E0 Ploss pk" 27 = "E0 PlevlHist" 28 = "E1 Edge Time" 29 = "E1 dEdge" 30 = "E1 dTime" 31 = "E1 EPR" 32 = "E1 Edge Mode" 33 = "E1 nMax" 34 = "E1 Error" 35 = "E1 Qloss pk" 36 = "E1 Ploss pk" 37 = "E1 PlevlHist" 38 = "E0 Delta2Err" 39 = "E1 Delta2Err" 40 = "E0B Present" 41 = "First Diff"			
246	**Spd Fdbk TP RPM** Displays the value selected in Par 245 [Spd Fdbk TP Sel] in rpm. This display should only be used if the selected value is floating point data.	Default: 0.0 Min/Max: -/+8.0 P.U. Units: rpm Scale: Par 4 [Motor NP RPM] = 1.0 P.U.		RO	Real
247	**Spd Fdbk TP Data** Displays the value selected in Par 245 [Spd Fdbk TP Sel]. This display should only be used if the selected value is integer data.	Default: 0 Min/Max: -/+32768		RO	16-bit Integer
249	**Fdbk Option ID** Displays information about the Feedback Option. • Bits 15-11 indicate Module ID Number. • Bits 10-6 indicate Version Number. • Bits 5-3 indicate Revision Number High. • Bits 2-0 indicate Revision Number Low. Hexadecimal 1000 indicates resolver, hexadecimal 2000 indicates old high-resolution board, and hexadecimal 2040 indicates new high-resolution board.	Options: N N NNN — Module ID No. N N NNN — Version No. N NNN — Revision No. High N NNN — Revision No. Low			
250	**FB Opt0 Posit** Displays the position feedback (accumulator) from the feedback option card port 0.	Default: 0 Min/Max: -/+2147483648		RO	32-bit Integer
251	**FB Opt0 Spd Fdbk** Displays the speed feedback from the feedback option card port 0.	Default: 0.0000 Min/Max: -/+14000.0000 Units: rpm Scale: Par 4 [Motor NP RPM] = 1.0 P.U.		RO	Real
252	**FB Opt1 Posit** Displays position feedback (accumulator) from port 1 of the feedback option card.	Default: 0 Min/Max: 0/2147483648		RO	32-bit Integer
253	**FB Opt1 Spd Fdbk** Displays speed feedback from port 1 of the feedback option card.	Default: 0.0 Min/Max: -/+8.0 P.U. Units rpm		RO	Real

No.	Name Description	Values	Linkable	Read-Write	Data Type

254 **Opt0/1 RegisCnfg**

Configures the registration latch for port 0 of the feedback option card.

- Bits 3 "00 RLTrgEdg0", 4 "00 RLTrgEdg1", 19 "01 RLTrgEdg0" and 20 "01 RLTrgEdg1" select which trigger edges signal the position (see Table 254A: Edge Selection Settings).
- Bits 5 "00 RL DirRev", 6 "00 RL DirFwd", 21 "01 RL DirRev" and 22 "01 RL DirFwd" set the direction of position capture (see Table 254B: Direction Settings).
- Bits 8-11 configure a digital filter for the registration trigger signal. This filter can be used to reject spurious noise. The filter works by waiting a programmed time before deciding that the signal is valid. This waiting imposes a mandatory delay in the registration signal. The filter delay is programmable in increments of 100 nanoseconds from 0 (or no delay) up to 700 nanoseconds.

Options	Reserved	Reserved	Reserved	Reserved	Reserved	Reserved	Reserved	Reserved	Reserved	01 RL DirFwd	01 RL DirRev	01 RLTrgEdg1	01 RLTrgEdg0	Reserved	Reserved	Reserved	Reserved	Reserved	Reserved	Reserved	RL Filt bit3	RL Filt bit2	RL Filt bit1	RL Filt bit0	Reserved	00 RL DirFwd	00 RL DirRev	00 RLTrgEdg1	00 RLTrgEdg0	Reserved	Reserved	Reserved
Default	x	x	x	x	x	x	x	x	x	0	0	0	0	x	x	x	x	x	x	x	1	0	0	0	x	1	1	0	0	x	x	x
Bit	31	30	29	28	27	26	25	24	23	22	21	20	19	18	17	16	15	14	13	12	11	10	9	8	7	6	5	4	3	2	1	0

0 = False
1 = True

Bits 3 & 4, 19 & 20, please refer to Table 254A: Edge Selection Settings below:
Bits 5 & 6, 21 & 22, please refer to Table 254B: Direction Settings.

Table 254A: Edge Selection Settings

Bit 4/20	3/19	
0	0	Capture on rising edge
0	1	Capture on falling edge
1	0	Capture on both edges
1	1	Disable capture

Table 254B: Direction Settings

Bit 6/22	5/21	
0	0	Disable capture
0	1	Capture position during Reverse rotation
1	0	Capture position during Forward rotation
1	1	Capture position during either rotation

255 **Opt0/1 RegisCtrl**

Configures the registration control on port 0 of the feedback option card.

- Set bits 0 "00 Arm Req" and 16 "01 Arm Req" to arm the registration logic for the next trigger event. The particular latch will be armed and ready to be strobed on the next occurrence of the trigger input.
- Set bits 1 "00 DisarmReq" and 17 "01 DisarmReq" to disarm the registration logic for next trigger event.

After the registration is captured, bit 0 "00 Arm Req" and bit 16 "01 Arm Req" automatically resets back to 0 after found. Bit 1 "00 DisarmReq" and bit 17 "01 DisarmReq" are only needed to disarm a registration latch that has not been found yet. Setting bits 1 and 17 will clear the bits 0 and 6. Setting bits 0 and 6 sets bits 0 "Opt0 Armed" and bit 16 "Opt1 Armed" and clears bits 1 "Opt0 Found" and bit 17 "Opt1 Found" of parameter 256 [Opt0/1 RegisStat].

Options	Reserved	Reserved	Reserved	Reserved	Reserved	Reserved	Reserved	Reserved	Reserved	Reserved	Reserved	Reserved	Reserved	Reserved	01 DisarmReq	01 Arm Req	Reserved	Reserved	Reserved	Reserved	Reserved	Reserved	Reserved	Reserved	Reserved	Reserved	Reserved	Reserved	Reserved	Reserved	00 DisarmReq	00 Arm Req
Default	x	x	x	x	x	x	x	x	x	x	x	x	x	x	0	0	x	x	x	x	x	x	x	x	x	x	x	x	x	x	0	0
Bit	31	30	29	28	27	26	25	24	23	22	21	20	19	18	17	16	15	14	13	12	11	10	9	8	7	6	5	4	3	2	1	0

0 = False
1 = True

256 **Opt0/1 RegisStat**

Indicates the registration control status on port 0 of the feedback option card.

- Bit 0 "Opt0 Armed" indicates the registration latch is armed.
- Bit 1 "Opt0 Found" indicates the registration event has triggered the latch.
- Rising edge of 'Arm request' will set the 'Armed' status bit.
- Rising edge of 'Disarm request' will clear the 'Armed' status bit.

Options	Reserved	Reserved	Reserved	Reserved	Reserved	Reserved	Reserved	Reserved	Reserved	Reserved	Reserved	Reserved	Reserved	Reserved	Opt1 Found	Opt1 Armed	Reserved	Reserved	Reserved	Reserved	Reserved	Reserved	Reserved	Reserved	Reserved	Reserved	Reserved	Reserved	Reserved	Reserved	Opt0 Found	Opt0 Armed
Default	x	x	x	x	x	x	x	x	x	x	x	x	x	x	0	0	x	x	x	x	x	x	x	x	x	x	x	x	x	x	0	0
Bit	31	30	29	28	27	26	25	24	23	22	21	20	19	18	17	16	15	14	13	12	11	10	9	8	7	6	5	4	3	2	1	0

0 = False
1 = True

257	**Opt 0 Regis Ltch** Displays the registration data of the feedback option card port 0. The registration data is the position reference counter value latched by the external strobes. The strobe signal used to trigger the latch is configurable by the Par 254 [Opt0/1 RegisCnfg].	Default: Min/Max:	0 -/+2147483648		RO	32-bit Integer
258	**Opt 1 Regis Ltch** Displays the registration data of the feedback option card port 0. The registration data is the position reference counter value latched by the external strobes. The strobe signal used to trigger the latch is configurable by Par 254 [Opt0/1 RegisCnfg].	Default: Min/Max:	0 -/+2147483648		RO	32-bit Integer

No.	Name Description	Values	Linkable	Read-Write	Data Type

259 **Stegmann0 Cnfg**

Configures the Stegmann Hi-Resolution Encoder Feedback Option.

- Bit 5 "Direction" determines counting direction. If clear, direction is forward or up. If set, the direction is reverse or down.
- Bits 10 "SmplRate bt0" -12 "SmplRate bt2" configure the Finite Impulse Response (FIR) Filter (see Table 259A: FIR Filter Settings). This setting reduces the effect of noisy feedback on the system. Refer to the Speed/Position Feedback section of the *PowerFlex® 700S with Phase II Control Reference Manual*, publication PFLEX-RM003 for details.

Notes: Bit 11 "SmplRate bt1" is set to 0 = False by default for firmware version 1.11 and is set to 1 = True by default for firmware version 2.003. This parameter was changed to non-linkable for firmware version 3.001.

Options	Reserved	Reserved	Reserved	Reserved	Reserved	Reserved	Reserved	Reserved	Reserved	Reserved	Reserved	Reserved	Reserved	Reserved	Reserved	Reserved	Reserved	Reserved	Reserved	SmplRate bt2	SmplRate bt1	SmplRate bt0	Reserved	Reserved	Reserved	SW Reset	Direction	Reserved	Reserved	Reserved	Reserved	Reserved
Default	x	x	x	x	x	x	x	x	x	x	x	x	x	x	x	x	x	x	x	0	0	0	x	x	x	0	0	x	x	x	x	x
Bit	31	30	29	28	27	26	25	24	23	22	21	20	19	18	17	16	15	14	13	12	11	10	9	8	7	6	5	4	3	2	1	0

0 = False
1 = True

Table 259A: FIR Filter Settings

Bit 12	11	10	Taps
0	**0**	**0**	1
0	**0**	**1**	2
0	**1**	**0**	4
0	**1**	**1**	8
1	**0**	**0**	16
1	**0**	**1**	32
1	**1**	**0**	64
1	**1**	**1**	127

260 **Stegmann0 Status**

Indicates faults on the Stegmann Hi-Resolution Encoder Feedback Option.

- Bit 8 "Open Wire" indicates an open wire fault.
  The feedback option card checks for a pre-determined constant value. If this value is not within tolerances, an open wire fault is declared. A quadrature check also is done. If an error occurs during the check, the ope wire check is aborted. If 3 quadrature errors occur in succession, the open wire check will complete and the constant value checked again. If this value is not within tolerances, the fault is declared.
- Bit 9 "PowerSup Er" indicates the failure of the power supply.
- Bit 10 "PwrUpDiag Er" indicates the option board failed its power-up diagnostic test.
  The pattern on the FPGA must be identical to the pattern written from the DSP, or the board status test will fail.
- Bit 11 "MsgChksum Er" indicates a message checksum fault.
  The check sum associated with the Heidenhain encoder must be correct and acknowledged by the feedback option card.
- Bit 12 "Time Out Err" indicates a RS-485 time-out fault.
  This check requires information to be sent from the encoder to the feedback option card within a specified time. Typical times are about 10 clock cycles before an error is detected. This check is done only at power-up.

Options	Reserved	Reserved	Reserved	Reserved	Reserved	Reserved	Reserved	Reserved	Reserved	Reserved	Reserved	Reserved	Reserved	Reserved	Reserved	Reserved	Reserved	Reserved	Reserved	Time Out Err	MsgChksum Er	PwrUpDiag Er	PowerSup Er	Open Wire	Reserved	Reserved	Reserved	Reserved	Reserved	Reserved	Reserved	Reserved
Default	x	x	x	x	x	x	x	x	x	x	x	x	x	x	x	x	x	x	x	0	0	0	0	0	x	x	x	x	x	x	x	x
Bit	31	30	29	28	27	26	25	24	23	22	21	20	19	18	17	16	15	14	13	12	11	10	9	8	7	6	5	4	3	2	1	0

0 = False
1 = True

261 **Steg&Hiedn TPSel**

Selects data displayed by Par 262 [Steg&Hiedn TPDta].

- Hh0 Edge Time - Latency counter value, not used for Hi-Resolution Feedback Option.
- Hh0 dEdge - Change in edge counts for one 500 microsecond update. At constant speed, this value should be constant.
- Hh0 dTime - Change in update time. This value should be constant, 500 microseconds.
- Hh0 EPR - This value should be 1,048,576 counts per revolution-this is a constant value.
- Hh0 nMax - This is a scaled value of 2.
- Hho Delta2Err - Derivative of value 2.

Default: 0 = "Zero"

Options:

0 = "Zero"	10 = "Reserved"
1 = "St0 EdgeTime"	11 = "Hh0 EdgeTime"
2 = "St0 dEdge"	12 = "Hh0 dEdge"
3 = "St0 dTime"	13 = "Hh0 dTime"
4 = "St0 EPR"	14 = "Hh0 EPR"
5 = "St0 EdgeMode"	15 = "Hh0 EdgeMode"
6 = "St0 nMax"	16 = "Hh0 nMax"
7 = "St0 Delta2Er"	17 = "Hh0 Delta2Er"
8 = "Reserved"	
9 = "Reserved"	

262 **Steg&Hiedn TPDta**

Displays data selected by Par 260 [Stegmann0 Status].

Default:	0		RO	16-bit Integer
Min/Max:	-/+32768			

No.	Name Description	Values	Linkable	Read-Write	Data Type

263 **Heidenhain0 Cnfg**

Configures the Heidenhain Encoder Feedback Option.

- Bit 5 "Direction" determines the counting direction. Set to "0" to count up or forward. Set to "1" to count in reverse or down.
- Bit 6 "SW Reset" setting this bit to "1" resets and restarts the option card.
- Bit 7 "VM Direction" determines the direction of the encoder pulse output from the Heidenhain option card when bit 6 "VrtlMasterEn" of Par 266 [Heidn Encdr Type] is set. When this bit is off, = "0", the direction of the encoder pulse output is the same as Par 1155 [Heidn VM Pos Ref], and the reverse of Par 1155 when this bit is set, = "1".
- Bits 10 -12 form a 3 bit moving average filter sampling rate. (See Table 263A: Sample Rate Bit Settings).

Notes: This parameter was added for firmware version 2.003. This parameter was changed to non-linkable for firmware version 3.001. Added bit 7 for firmware version 4.001.

Options	Reserved	Reserved	Reserved	Reserved	Reserved	Reserved	Reserved	Reserved	Reserved	Reserved	Reserved	Reserved	Reserved	Reserved	Reserved	Reserved	Reserved	Reserved	Reserved	SmplRate bt2	SmplRate bt1	SmplRate bt0	Reserved	Reserved	VM Direction	SW Reset	Direction	Reserved	Reserved	Reserved	Reserved	Reserved
Default	x	x	x	x	x	x	x	x	x	x	x	x	x	x	x	x	x	x	x	0	1	1	x	x	0	0	0	x	x	x	x	x
Bit	31	30	29	28	27	26	25	24	23	22	21	20	19	18	17	16	15	14	13	12	11	10	9	8	7	6	5	4	3	2	1	0

0 = False
1 = True

Table 263A: Sample Rate Bit Settings

Bit 12	11	10	Exponent Value 'n'	Filter Sample Size = 2^n
0	0	0	0	1
0	0	1	1	2
0	1	0	2	4
0	1	1	3	8 (Default)
1	0	0	4	16
1	0	1	5	32
1	1	0	6	64
1	1	1	7	127

264 **Heidenhain0 Stat**

Indicates fault and alarm statuses on the Heidendhain encoder feedback option card and Endat communication.

- Bit 0 "VM Enc Out" when set, indicates that the encoder output from the Heidenhain option card is the virtual encoder position determined by Par 1155 [Heidn VM Pos Ref].
- Bit 1 "Emul Enc Out" when set, indicates that the encoder output from the Heidenhain option card is the emulated encoder position determined by the connected Heidenhain encoder.
- Bit 5 "Sig Amplitud" indicates that the signal amplitude is insufficient or too large.
- Bit 6 "Quadrate Er" indicates that there is a signal quadrature error.
- Bit 7 "Open Wire" indicates an open wire fault.
- Bit 8 "VoltageLvlEr" indicates that the operating voltage is too high or too low.
- Bit 9 "PowerSup Er" indicates the failure of the power supply.
- Bit 10 "PowerUpDiag Er" indicates the option board failed its power-up diagnostic test.
  The pattern on the FPGA must be identical to the pattern written from the DSP, or the board status test will fail.
- Bit 11 "MsgChecksum Er" indicates a message checksum fault.
  The check sum associated with the Endat communication device must be correct and acknowledged by the feedback option card.
- Bit 12 "Time Out Err" indicates an Endat time-out fault.
- Bit 13 "PPR Error" indicates an encoder PPR setting mismatch fault.
- Bit 14 "Bootup Error" indicates an Endat boot-up fault.
- Bit 15 "FW VersionEr" indicates that the firmware version of the encoder does not match the firmware version of the Heidenhain option card in the drive.
- Bit 16 "LightSrc Er" indicates an Endat light source fault.
- Bit 17 "Sig Amplitud" indicates an Endat signal amplitude fault.
- Bit 18 "PstvValue Er" indicates an Endat positive value fault.
- Bit 19 "Over Voltage" indicates an Endat over voltage fault.
- Bit 20 "Undr Voltage" indicates an Endat under voltage fault.
- Bit 21 "Over Current" indicates an Endat over current fault.
- Bit 24 "FrqExced Alm" indicates an Endat frequency exceeded alarm.
- Bit 25 "Temprtr Alm" indicates an Endat temperature exceeded alarm.
- Bit 26 "LghtCtrl Alm" indicates an Endat limit of light control alarm.
- Bit 28 "RefPoint Alm" indicates an Endat reference point alarm.

Notes: This parameter was added for firmware version 2.003. Bit 14 was changed from "Endat BootEr" to "Bootup Error" and bit 15 "FW VersionErr" is new for firmware version 3.001. Bits 0 and 1 were added for firmware version 4.001.

Options	Reserved	Reserved	Reserved	RefPoint Alm	Reserved	LghtCtrl Alm	Temprtr Alm	FrqExced Alm	Reserved	Reserved	Over Current	Undr Voltage	OverVoltage	PstvValue Er	Sig Amplitud	LightSrc Er	FW VersionEr	Bootup Error	PPR Error	Time Out Err	MsgChecksum Er	PowerUpDiag Er	PowerSup Er	VoltageLvlEr	Open Wire	Quadrate Er	Sig Amplitud	Reserved	Reserved	Reserved	Emul Enc Out	VM Enc Out
Default	x	x	x	0	x	0	0	0	x	x	0	0	0	0	0	0	0	0	0	0	0	0	0	0	0	0	0	x	x	x	0	0
Bit	31	30	29	28	27	26	25	24	23	22	21	20	19	18	17	16	15	14	13	12	11	10	9	8	7	6	5	4	3	2	1	0

0 = False
1 = True

265 **Heidn Mkr Offset**

Configures marker offset values for the Heidenhain Encoder Feedback Option. The marker offset is specified within one revolution.
Note: This parameter was added for firmware version 2.003.

		Linkable	Read-Write	Data Type
Default:	0.0000	Y	RW	32-bit Integer
Min/Max:	0.0000/4294967295			

No.	Name Description	Values		Linkable	Read-Write	Data Type
266	**Heidn Encdr Type** Configures the encoder type manually if the Endat type is not used. • Bit 0 "Reserved" Automatically set after power-up. Do not change. • Bit 1 "Not EnDat" Enables/Disables EnDat serial communications. Serial communications must be turned on for permanent magnet motors or if absolute position is required. With EnDat serial communications enabled, bit 2 "Multi Turn" and the value of parameter 267 [Heidn Encdr PPR] will be automatically set on power-up. • Bit 2 "Multi Turn" set to "1" (True) if the encoder supports mutli-turn absolute position. This bit is set automatically if bit 1 "Not EnDat" is set to "0" (False). • Bit 5 "Endat24bitSl" when this bit is on, the Heidenhain encoder works as Endat / Single turn / 24 bits. When this bit is off, the Heidenhain encoder works as Endat / Single turn / 20 bits. • Bit 6 "VrtlMasterEn" when set, indicates that the Virtual Master encoder function of the Heidenhain option card is active. The Virtual Master function is available with v3.00 or later of the Heidenhain option card. Notes: This parameter was added for firmware version 2.003. Bit 1 "Not Endat" was changed to "0" (false) and bit 2 "Multi Turn" was changed to "1" (true) for firmware version 2.004. Bit 1 "Not Endat" was changed to "1" (true), bit 2 "Multi Turn" was changed to "0" (False), and bit 6 "Endat24bitSl" was added for firmware version 3.001. Added bit 6 for firmware version 4.001.			Y	RW	16-bit Integer

Options	Reserved	Reserved	Reserved	Reserved	Reserved	Reserved	Reserved	Reserved	Reserved	VrtlMasterEn	Endat24bitSl	Reserved	Reserved	Multi Turn	Not EnDat	Reserved
Default	x	x	x	x	x	x	x	x	x	0	0	x	x	0	1	x
Bit	15	14	13	12	11	10	9	8	7	6	5	4	3	2	1	0

0 = False
1 = True

No.	Name Description	Values		Linkable	Read-Write	Data Type
267	**Heidn Encdr PPR** Set this value equal to the Heidenhain encoder PPR (e.g., 2048). This value is automatically set when bit 1 "NotEnDat" of parameter 266 [Heidn Encdr Type] is set to "0" (False). Note: This parameter was added for firmware version 2.003. Changed the minimum value from "10" to "1" for firmware version 4.001.	Default: Min/Max: Units:	2048 1/100000 PPR		RW	32-bit Integer

No.	Name Description	Values	Linkable	Read-Write	Data Type

268 **Resolver0 Cnfg**

Configures options for the resolver option card port 0.

- Setting bit 0 "Cable Tune" enables the cable tuning test, resetting the bit to zero disables the test. Refer to the section on Resolver Cable Tuning Tests in publication PFLEX-RM003, *Reference Manual - PowerFlex 700S Drives with Phase II Control* for more information.
- Bit 1 "Tune Param" has been disabled.
- Bits 2 "Resolution 0" and 3 "Resolution 1" select the resolver resolution (see Table 268A: Resolution Settings). This determines the number of significant bits that are calculated in the value of Par 250 [FB Opt0 Posit]. It does not affect the number of counts created per resolver revolution (see Table 268B: Resolution and Least Significant Bits Used). Also, the resolution sets a limit on the maximum tracking speed (see Table 268C: Resolution and Resolver Tracking Speed).
- Setting bit 4 "Energize" energizes the resolver, resetting the bit to zero de-energizes the resolver.
- Bit 5 "Resolver Dir" determines counting direction. If clear, direction is forward or up. If set, the direction is reverse or down.

1. Bit 9 "Edge Time" configures the method of sampling used by the Velocity Position Loop (VPL). Setting the bit chooses "Edge to Edge" sampling, while resetting the bit to zero chooses "Simple Difference" sampling. "Simple Difference" sampling calculates speed by examining the difference between pulse counts over a fixed sample time. "Edge to Edge" sampling adjusts the sample time to synchronize with the position count updates from the daughter card - improving the accuracy of the speed calculation.

- Bits 10 "SmplRate bt0" through 12 "SmplRate bt2" configure the Finite Impulse Response (FIR) Filter (see Table 268D: FIR Filter Settings). This setting reduces the effect of noisy feedback on the system. Refer to the Speed/Position Feedback section of the *PowerFlex® 700S with Phase II Control Reference Manual*, publication PFLEX-RM003 for details.

Note: Bit 11 "SmplRate bt0" is set to 0 = False by default for firmware version 1.11 and bit 11 "SmplRate1" is set to 1 = True by default for firmware version 2.003.

Options	Reserved	Reserved	Reserved	Reserved	Reserved	Reserved	Reserved	Reserved	Reserved	Reserved	Reserved	Reserved	Reserved	Reserved	Reserved	Reserved	Reserved	Reserved	Reserved	SmplRate bt2	SmplRate bt1	SmplRate bt0	Reserved	Reserved	Reserved	Reserved	Resolver Dir	Energize	Resolution 1	Resolution 0	Reserved	Cable Tune
Default	x	x	x	x	x	x	x	x	x	x	x	x	x	x	x	x	x	x	x	0	1	0	x	x	x	x	0	1	0	1	x	0
Bit	31	30	29	28	27	26	25	24	23	22	21	20	19	18	17	16	15	14	13	12	11	10	9	8	7	6	5	4	3	2	1	0

0 = False
1 = True

Table 268A: Resolution Settings

Bit 3	2	Resolution
0	0	10 bit resolution
0	1	12 bit resolution (default setting)
1	0	14 bit resolution
1	1	16 bit resolution

Table 268B: Resolution and Least Significant Bits Used

Resolution	LSB Not Used	Parameter 250 Increments by
16 bit	All bits used	1
14 bit	2 LSB not used	4
12 bit	4 LSB not used	8
10 bit	6 LSB not used	64

Table 268C: Resolution and Resolver Tracking Speed

Resolution	Maximum Carrier Freq.	Tracking Speed for X1 Resolver	Tracking Speed for X2 Resolver	Tracking Speed for X5 Resolver
10 bit	34 kHz	55 K-rpm	27.5 K-rpm	11 K-rpm
12 bit	24kHz	13.8 K-rpm	6.9 K-rpm	2.76 K-rpm
14 bit	14kHz	3480 rpm	1740 rpm	696 rpm
16 bit	10 kHz	900 rpm	450 rpm	180 rpm

Table 268D: FIR Filter Settings

Bit 12	11	10	Taps
0	0	0	1
0	0	1	2
0	1	0	4
0	1	1	8
1	0	0	16
1	0	1	32
1	1	0	64
1	1	1	127

269 **Resolver0 Status**

Indicates status of the resolver option card port 0.

- Bit 0 "-Cable Tune"
- Bit 1 "-Tune Result" indicates the tuning Parameter type. When set, it indicates the tuning is using the parameter database. When cleared, it indicates the tuning is using derived data.
- Bit 2 "-Mtr Turning" indicates that the motor is turning.
- Bit 4 "Energized" indicates the resolver is energized.
- Bit 8 "Open Wire" indicates a problem with the cable (open circuit).
- Bit 9 "Power Supply" indicates problem with the option card's power supply.
- Bit 10 "Diag Fail" indicates the option card has failed its power-up diagnostics.

Options	Reserved	Reserved	Reserved	Reserved	Select OK	Diag Fail	Power Supply	Open Wire	Reserved	Reserved	Reserved	Energized	-Cable Comp	-Mtr Turning	-Tune Result	-Cable Tune
Default	x	x	x	x	0	0	0	0	x	x	x	0	0	0	0	0
Bit	15	14	13	12	11	10	9	8	7	6	5	4	3	2	1	0

0 = False
1 = True

No.	Name Description	Values		Linkable	Read-Write	Data Type
270	**Reslvr0 TP Sel** Enter or write a value to select Fault data displayed in Par 271 [Reslvr0 TP Data].	Default: Options:	0 = "Zero" 0 = "Zero" 1 = "R0 Edge Time" 2 = "R0 dEdge" 3 = "R0 dTime" 4 = "R0 EPR" 5 = "R0 Edge Mode" 6 = "R0 nMax" 7 = "R0 Delta2Err"			
271	**Reslvr0 TP Data** Displays the data selected by Par 270 [Reslvr0 TP Sel].	Default: Min/Max:	0 -/+2147483648		RO	32-bit Integer
272	**Reslvr0 SpdRatio** Specifies the speed ratio for the resolver option card port 0. The speed ratio comes from the following formula. Speed ratio = electrical revolutions / mechanical revolutions = pole count / 2. Note: Option 0 = "Zero" was added for firmware version 2.004.	Default: Options:	1 = 2 poles (x1) 0 = "Zero" 1 = 2 Poles (x1) 2 = 4 Poles (x2) 3 = 6 Poles (x3) 4 = 8 Poles (x4) 5 = 10 Poles(x5)			
273	**Reslvr0 Carrier** Specifies the resolver carrier frequency for the resolver option card port 0.	Default: Min/Max: Units:	0 0/10000 Hz		RO	32-bit Integer
274	**Reslvr0 In Volts** Specifies the resolver input voltage for the resolver option card port 0.	Default: Min/Max: Units:	0.0000 0.0000/31.0810 V		RO	Real
275	**Rslvr0 XfrmRatio** Specifies the resolver transform ratio for the resolver option card port 0.	Default: Min/Max:	0.0000 0.0000/4.0950		RO	Real
276	**Reslvr0 CableBal** Specifies the resolver cable balance for the resolver option card port 0.	Default: Min/Max:	0 0/255		RO	Real
277	**Reslvr0 Type Sel** Specifies used resolver. The values for options 5 & 12 were changed to "Reserved" for firmware version 2.004. Added options 15 and 16 for firmware version 4.001 but are not functional (for future use).	Default: Options:	0 = "Disabled" 0 = "Disabled" 1 = "T2014/2087x1" 2 = "T2014/2087x2" 3 = "T2014/2087x5" 4 = "MPL 460v" 5 = "Reserved" 6 = "Siemens 1FT6" 7 = "PrkrHn ZX600" 8 = "Reserved" 9 = "1326Ax 460v" 10 = "Reserved" 11 = "Reserved" 12 = "Reserved" 13 = "Reserved" 14 = "AmciR11XC107" 15 = "PowerTec R1" 16 = "PowerTec R2"			

No.	Name Description	Values			Linkable	Read-Write	Data Type
278	**Sleep-Wake Mode** Enables/disables the Sleep-Wake function. **Important:** When enabled, the following conditions must be met: • A proper value must be programmed for parameters 280 [Wake Level] and 282 [Sleep Level]. • A speed reference must be selected in parameter 27 [Speed Ref A Sel]. • At least one of the following must be programmed (and input closed) in [Dig Inx Sel]; "Enable,""Stop=CF," "Run." Note: This parameter was added with firmware version 5.002.	Default: Options:	0 = 0 = 1 = 2 =	"Disabled" "Disabled" "Direct" "Invert"			

ATTENTION: Enabling the Sleep-Wake function can cause unexpected machine operation during the Wake mode. Equipment damage and/or personal injury can result if parameter 278 [Sleep-Wake Mode] is used in an inappropriate application. Do Not use this function without considering the information below and in Sleep-Wake Mode on page 169. In addition, all applicable local, national and international codes, standards, regulations or industry guidelines must be considered.

Conditions Required to Start Drive (1)(2)(3)

Input	After Power-Up	After a Drive Fault		After a Stop Command
		Reset by Stop-CF, HIM or TB	*Reset by Clear Faults (TB)*	*HIM or TB*
Stop	Stop Closed Wake Signal	Stop Closed Wake Signal New Start or Run Cmd.(4)	Stop Closed Wake Signal	Stop Closed Direct Mode Analog Sig. > Sleep Level(6) Invert Mode Analog Sig. < Sleep Level(6) New Start or Run Cmd.(4)
Enable	Enable Closed Wake Signal(4)	Enable Closed Wake Signal New Start or Run Cmd.(4)	Enable Closed Wake Signal	Enable Closed Direct Mode Analog Sig. > Sleep Level(6) Invert Mode Analog Sig. < Sleep Level(6) New Start or Run Cmd.(4)
Run	New Run Cmd.(5) Wake Signal	New Run Cmd.(5) Wake Signal	New Run Cmd.(5) Wake Signal	New Run Cmd.(5) Wake Signal

(1) When power is cycled, if all of the above conditions are present after power is restored, restart will occur.
(2) If all of the above conditions are present when [Sleep-Wake Mode] is "enabled," the drive will start.
(3) The active speed reference is determined as explained in "Reference Selection" in the PowerFlex 700S AC Drives Phase II Control Reference Manual, publication PFLEX-RM003. The Sleep-Wake function and the speed reference may be assigned to the same input.
(4) Command must be issued from HIM, TB or network.
(5) Run Command must be cycled.
(6) Signal does not need to be greater than wake level.

279	**Sleep-Wake Ref** Selects the source of the input controlling the Sleep-Wake function. Note: This parameter was added with firmware version 5.002.	Default: Options:	2 = 1 = 2 =	"Analog In 2" "Analog In 1" "Analog In 2"			
280	**Wake Level** Defines the analog input level (at or above) that will start the drive. Note: This parameter was added with firmware version 5.002.	Default: Min/Max: Units:	6.000 mA, 6.000V [Sleep Level]/20.000 mA, 10.000V 0.001 mA / 0.001V			RW	Real
281	**Wake Time** Defines the amount of time that the value of [Wake Level] must be present before a Start is issued. Note: This parameter was added with firmware version 5.002.	Default: Min/Max: Units:	0.0 s 0.0/1000.0 s 0.1 s			RW	Real
282	**Sleep Level** Defines the analog input level (at or below) that will stop the drive. Note: This parameter was added with firmware version 5.002.	Default: Min/Max: Units:	5.000 mA / 5.000V 4.000 mA, 0.000V / [Wake Level] 0.001 mA / 0.001V			RW	Real
283	**Sleep Time** Defines the amount of time that the value of [Sleep Level] must be present before a Stop is issued. Note: This parameter was added with firmware version 5.002.	Default: Min/Max: Units:	0.0 s 0.0/1000.0 s 0.1 s			RW	Real

No.	Name Description	Values	Linkable	Read-Write	Data Type

284 **Sleep Control**

Status of the Sleep-Wake function.

- Bit 0 "Enable" when set, Sleep-Wake mode is enabled.
- Bit 1 "Analog Ref 0" when set, indicates that analog input 1 is used for Sleep mode control.
- Bit 2 "Analog Ref 1" when set, indicates that analog input 2 is used for Sleep mode control.
- Bit 3 "Mode 0" when set, direct control is used.
- Bit 4 "Mode 1" when set, inverted control is used.
- Bits 5 . . . 7 "State x" indicate the Sleep-Wake mode state that is currently active. See Table 284A: Sleep-Wake Mode Active State below.
- Bit 8 "Digin Cnflct" when set indicates that a digital input conflict exists. See Par Par 278 [Sleep-Wake Mode] for details on digital input programming for the Sleep-Wake function.
- Bit 9 "Stop Latch" when set, a Stop command is being issued from the sleep mode.
- Bit 10 "Start Latch" Not used.
- Bit 11 "Not Running" when set, the drive is not running.
- Bit 12 "Level Cnflct" when set, the value of Par 280 [Wake Level] or Par 282 [Sleep Level] is outside the Min/Max range of the assigned analog input (mA or V). Or, if in direct mode, the value of [Sleep Level] is greater than the value of [Wake Level].

Note: This parameter was added with firmware version 5.002.

Options	unused 3	unused 2	unused 1	Level Cnflct	Not Running	Start Latch	Stop Latch	Digin Cnflct	State 2	State 1	State 0	Mode 1	Mode 0	Analog Ref 1	Analog Ref 0	Enable
Default	x	x	x	0	0	0	0	0	0	0	0	0	0	0	0	0
Bit	15	14	13	12	11	10	9	8	7	6	5	4	3	2	1	0

0 = False
1 = True

Table 284A: Sleep-Wake Mode Active State

Bit 7	6	5	Active Mode
0	0	0	Drive is powering up
0	0	1	Drive is asleep
0	1	0	Drive is waiting
0	1	1	Drive is awake

285 **Linear1 Config**

Used to configure a linear encoder when a Multi Device Interface (MDI) feedback card is installed.

Note: This parameter was added for firmware version 2.003.

- Bit 5 "Direction" - Setting this bit to "1" inverts the count (up/down) direction of the linear feedback position Par 252 [FB Opt1 Posit]. If [FB Opt1 Posit] has been counting up for forward feedback sensor travel then setting this bit will cause [FB Opt1 Posit] to count down. The opposite behavior will occur when the sensor moves in the other direction.
- Bit 6 "Stahl Linear" - Setting this bit to "1" indicates to the MDI card that a Stahl type linear device is being used. It this bit is set to "0" then a Temposonics linear device is being used.
- Bits 10 - 12 form a 3 bit moving average filter sampling rate. See Table 285A: Sample Rate Bit Settings.

Options	Reserved	Reserved	Reserved	Op1SmplRt b3	Op1SmplRt b2	Op1SmplRt b1	Reserved	Reserved	Reserved	Stahl Linear	Direction	Reserved	Reserved	Reserved	Reserved	Reserved
Default	x	x	x	0	1	1	x	x	x	0	0	x	x	x	x	x
Bit	15	14	13	12	11	10	9	8	7	6	5	4	3	2	1	0

0 = False
1 = True

Table 285A: Sample Rate Bit Settings

Bit 12	11	10	Exponent Value 'n'	Filter Sample Size = 2^n
0	0	0	0	1
0	0	1	1	2
0	1	0	2	4
0	1	1	3	8 (Default)
1	0	0	4	16
1	0	1	5	32
1	1	0	6	64
1	1	1	7	127

No.	Name Description	Values	Linkable	Read-Write	Data Type

286 **Linear1 Status**
Indicates faults on the Multi Device Interface (MDI).
Bit 8 "Open Wire" indicates an open wire fault.

Options	Reserved	Reserved	Reserved	Reserved	Reserved	Reserved	Reserved	Reserved	Reserved	Reserved	Reserved	Reserved	Reserved	Reserved	Reserved	Reserved	Reserved	Reserved	Reserved	Reserved	Reserved	Reserved	Reserved	Open Wire	Reserved	Reserved	Reserved	Reserved	Reserved	Reserved	Reserved	Reserved
Default	x	x	x	x	x	x	x	x	x	x	x	x	x	x	x	x	x	x	x	x	x	x	x	0	x	x	x	x	x	x	x	x
Bit	31	30	29	28	27	26	25	24	23	22	21	20	19	18	17	16	15	14	13	12	11	10	9	8	7	6	5	4	3	2	1	0

0 = False
1 = True

287 **Linear1 TP Sel**
Enter or write a value to select Linear Feedback data displayed in Par 288 [Linear1 TP Data].
- Value 0 - Zero displays a value of zero.
- Value 1 - L1 Edge Time displays the change displays the latency or edge time (the time since the last update of Par 252 [FB Opt1 Posit]).
- Value 2 - L1 dEdge displays the change in Par 252 [FB Opt1 Posit] since the last feedback sample.
- Value 3 - L1 DTime displays the change in time since the last feedback sample Note the sample rate is 10,000 counts per second (10 Mhz).
- Value 4 - L1 EPR displays the change in edges per motor revolution. This number is the same value in Par 290 [Linear1 CPR].
- Value 5 - Edge Mode should always display a zero (0).
- Value 6 - L1 nMax displays the numerator term for speed calculation. This number divided by change in time (TP3) is the calculated per unit speed for the linear feedback sensor.

Default: 0 = "Zero"
Options:
0 = "Zero"
1 = "L1 Edge Time"
2 = "L1 dEdge"
3 = "L1 dTime"
4 = "L1 EPR"
5 = "L1 Edge Mode"
6 = "L1 nMax"
7 = "L1 Delta2Err"

288 **Linear1 TP Data**
Displays the data selected by Par 287 [Linear1 TP Sel].

Default: 0
Min/Max: -/+32768
Linkable: | Read-Write: RO | Data Type: 16-bit Integer

289 **Lin1 Update Rate**
Sets the sample rate for the linear channel on the Multi Device Interface (MDI) feedback option.

Default: 2 = "1.0 msec"
Options:
0 = "8.0 msec"
1 = "0.5 msec"
2 = "1.0 msec"
3 = "1.5 msec"
4 = "2.0 msec"
5 = "2.5 msec"
6 = "3.0 msec"
7 = "3.5 msec"
8 = "4.0 msec"
9 = "4.5 msec"
10 = "5.0 msec"
11 = "5.5 msec"
12 = "6.0 msec"
13 = "6.5 msec"
14 = "7.0 msec"
15 = "7.5 msec"

290 **Linear1 CPR**
Specifies the change in Par 252 [FB Opt1 Posit] for one revolution of the motor shaft. This value is used to scale the calculated speed, based on the change in feedback position. Units are count per motor revolution (CPR).

Default: 1000
Min/Max: 10/100000
Units: CPR
Linkable: | Read-Write: RW | Data Type: 32-bit Integer

291 **Lin1Stahl Status**
Displays the status of the Stahl linear encoder. The Stahl linear encoder works with the MDI option card.
- Bit 8 "No Data Read" indicates that no data can be read from the encoder
- Bit 9 "Alarm Optics" displays an alarm when fiber optics require cleaning
- Bit 10 "Out of Range" indicates that the encoder read count is at the maximum value (524,287)
- Bit 11 "ErrBits16-31" displays a diagnostic error code (refer to bits 16-31)
- Bit 16 "Fault Optics" indicates that the read head for fiber optic cable must be cleaned or replaced
- Bit 17 "Read Head" indicates that the fiber optic cable read head must be checked, aligned or replaced
- Bit 18 "RAM error" indicates that the fiber optic cable read head must be replaced
- Bit19 "EPROM error" indicates that there is an error with the communication module, replace read head.
- Bit 20 "ROM error" indicates, replace read head.
- Bit 22 "No Position" Cycle power to Stahl read head.

Options	Reserved	Reserved	Reserved	Reserved	Reserved	Reserved	Reserved	Reserved	Reserved	No Position	Reserved	ROM error	EPROM error	RAM error	Read Head	Fault Optics	Reserved	Reserved	Reserved	Reserved	ErrBits16-31	Out of Range	Alarm Optics	No Data Read	Reserved	Reserved	Reserved	Reserved	Reserved	Reserved	Reserved	Reserved
Default	x	x	x	x	x	x	x	x	x	0	x	0	0	0	0	0	x	x	x	x	0	0	0	0	x	x	x	x	x	x	x	x
Bit	31	30	29	28	27	26	25	24	23	22	21	20	19	18	17	16	15	14	13	12	11	10	9	8	7	6	5	4	3	2	1	0

0 = False
1 = True

296 **Motor Freq Ref**
Currently not used.
Note: This parameter was added for firmware version 2.003.

Default: 0.00
Min/Max: -/+500.00
Units: Hz
Linkable: | Read-Write: RO | Data Type: Real

297 **Output Curr Disp**
Displays measured RMS motor current with a resolution of 1/10 amperes.

Default: 0.0
Min/Max: 0.0/9999.9
Units: A
Scale: x 10
Linkable: | Read-Write: RO | Data Type: 32-bit Integer

298 **Elapsed Run Time**
Displays the total time that the drive has been running (inverter power devices active) with a resolution of 1/10 hour. This parameter is saved in power EE non-volatile memory. The value in this parameter can be changed (written to) by the user.

Default: 0.0
Min/Max: 0.0/429496736.0
Units: hr
Scale: x 10
Linkable: | Read-Write: RW | Data Type: 32-bit Integer

No.	Name Description	Values		Linkable	Read-Write	Data Type
299	**Elapsed MWHrs** Displays the total energy the drive has consumed or produced. Calculated from the absolute magnitude of the product of motor speed and motor torque (power), accumulated over time. This value will increase in both regen and motoring modes of operation. This parameter value can be changed (written to) by the user.	Default: Min/Max: Units: Scale:	0.0 0.0/429496736.0 MWhr x 10		RW	32-bit Integer
300	**Motor Spd Fdbk** Displays measured motor speed information from the selected feedback device.	Default: Min/Max: Units: Scale:	0.0000 -/+14112.0000 rpm Par 4 [Motor NP RPM] = 1.0 P.U.		RO	Real
301	**Motor Speed Ref** Displays the speed reference value, after the limit function. This is the input to the error calculator and speed regulator.	Default: Min/Max: Units: Scale:	0.0000 -/+14112.0000 rpm Par 4 [Motor NP RPM] = 1.0 P.U.		RO	Real
302	**Spd Reg PI Out** Displays the output of the speed regulator. This is the input to torque control. A value of 1.0 represents base torque of the motor.	Default: Min/Max: Units:	0.0000 -/+8.0000 P.U. P.U.		RO	Real
303	**Motor Torque Ref** Displays the reference value of motor torque. The actual value of the motor torque is within 5% of this value.	Default: Min/Max: Units:	0.0000 -/+8.0000 P.U. P.U.		RO	Real

304 Limit Status

Displays the limit status of conditions that may be limiting the current reference or torque reference.

- Bit 0 "+MCS Iq Lim" indicates that torque producing current is at its positive limit.
- Bit 1 "+MCS Ws Lim" indicates that flux producing torque is at its positive limit.
- Bit 2 "0 Ia from +" indicates that torque producing current is limited to zero from the positive direction - refer to Par 353 [Iq Actual Lim].
- Bit 3 "+Iq Calc" indicates the calculation for torque producing current has reached its positive limit.
- Bit 4 "+Current Lim" indicates that the current reference has reached the positive Motor Current Limit set by Par 356 [Mtr Current Lim].
- Bit 5 "+DriveProtOL" indicates that the current reference has reached the positive current limit set by the Open Loop Inverter Overload, shown in Par 343 [OL OpnLp CurrLim].
- Bit 6 "+DriveProtCL" indicates that the current reference has reached the positive current limit set by the Closed Loop Inverter Overload, shown in Par 344 [OL ClsLp CurrLim].
- Bit 8 "+Torq Limit" indicates that the torque reference has reached the Positive Torque Limit set by Par 125 [Torque Pos Limit].
- Bit 9 "Mtrng PwrLim" indicates that the torque reference is being limited by the Motoring Power Limit set by Par 127 [Mtring Power Lim].
- Bit 10 "+Torq CurLim" indicates that current reference has reached the Actual Torque Producing Current Limit set by Par 353 [Iq Actual Lim].
- Bit 11 "Atune Tq Lim" indicates that the torque reference is being limited by Par 129 [Atune Trq Ref].
- Bit 12 "+0 Torq Ena" indicates that the torque reference is limited to zero because Par 157 [Logic Ctrl State] bit 9 "Torq Ref En" is off.
- Bit 13 "+0 Curr Ena" indicates that the current reference is limited to zero because Par 157 [Logic Ctrl State] bit 11 "CurrRef En" is off.
- Bit 14 "Speed Limit" indicates the collective status of all speed limitations.
- Bit 15 "Current Lim" indicates the collective status of all current limitations
- Bit 16 "-MCS Iq Lim" indicates that torque producing current is at its negative limit.
- Bit 17 "-MCS Ws Lim" indicates that flux producing torque is at its negative limit.
- Bit 18 "0 Ia from -" indicates that torque producing current is limited to zero from the negative direction - refer to Par 353 [Iq Actual Lim].
- Bit 19 "-Iq Calc' indicates the calculation for torque producing current has reached its negative limit.
- Bit 20 "-Current Lim" indicates that the current reference has reached the negative Motor Current Limit set by Par 356 [Mtr Current Lim].
- Bit 21 "-DriveProtOL" indicates that the current reference has reached the negative current limit set by the Open Loop Inverter Overload, shown in Par 343 [OL OpnLp CurrLim].
- Bit 22 "-DriveProtCL" indicates that the current reference has reached the negative current limit set by the Closed Loop Inverter Overload, shown in Par 344 [OL ClsLp CurrLim].
- Bit 24 "-Torq Limit" indicates that the torque reference has reached the Negative Torque Limit set by Par 126 [Torque Neg Limit].
- Bit 25 "Regen PwrLim" indicates that the torque reference is being limited by the Regenerative Power Limit set by Par 128 [Regen Power Lim].
- Bit 26 "-Torq CurLim" indicates that current reference has reached the Actual Torque Producing Current Limit set by Par 353 [Iq Actual Lim].
- Bit 27 "Bus Reg Tq Lim" indicates the bus voltage regulator is active and limiting the regenerative torque.
- Bit 28 "-0 Torq Ena" indicates that the torque reference is limited to zero because Par 157 [Logic Ctrl State] bit 9 "Torq Ref En" is off.
- Bit 29 "-0 Curr Ena" indicates that the current reference is limited to zero because Par 157 [Logic Ctrl State] bit 11 "CurrRef En" is off.
- Bit 30 "Torque Limit" indicates the collective status of all torque limitations.
- Bit 31 "Power Limit" indicates the collective status of all power limitations.

Options	Power Limit	Torque Limit	-0 Curr Enbl	-0 Trq Enbl	Bus Reg Lim	-Trq CurLim	Regen PwrLim	-Trq Limit	SpdReg Open	-DriveProtCL	-DriveProtOL	-Current Lim	-Iq Calc	0 Iq from -	-MCS Ws Lim	-MCS Iq Lim	Current Lim	Speed Limit	+0 Curr Enbl	+0 Trq Enbl	Atun Trq Lim	+Trq CurLim	Mtrng PwrLim	+Trq Limit	+SpdReg Open	+DriveProtCL	+DriveProtOL	+Current Lim	+Iq Calc	0 Iq from +	+MCS Ws Lim	+MCS Iq Lim
Default	0	0	0	0	0	0	0	0	0	0	0	0	0	0	0	0	0	0	0	0	0	0	0	0	0	0	0	0	0	0	0	0
Bit	31	30	29	28	27	26	25	24	23	22	21	20	19	18	17	16	15	14	13	12	11	10	9	8	7	6	5	4	3	2	1	0

0 = False
1 = True

305	**Mtr Trq Curr Ref** Displays the torque current reference present at the output of the current rate limiter. 100% is equal to 1 per unit (P.U.) rated motor torque.	Default: Min/Max: Units:	0.0000 -/+8.0000 P.U. P.U.		RO	Real
306	**DC Bus Voltage** Displays measured bus voltage. Note: The maximum value was increased from 1000.0000 to 1170.0000 for firmware version 3.001.	Default: Min/Max: Units:	0.0000 0.0000/1170.0000 V		RO	Real
307	**Output Voltage** Displays RMS line-to-line fundamental motor voltage. This data is averaged and updated every 50 milliseconds.	Default: Min/Max: Units:	0.00 0.00/3000.00 V		RO	Real
308	**Output Current** Displays measured RMS motor current.	Default: Min/Max: Units:	0.00 0.00/10000.00 A		RO	Real

No.	Name Description	Values		Linkable	Read-Write	Data Type
309	**% Motor Flux** Displays the motor flux in % of nominal.	Default: Min/Max: Units: Scale:	0.0 0.0/100.0 % 100 = 4096		RO	16-bit Integer
310	**Output Freq** Displays the motor stator frequency.	Default: Min/Max: Units:	0.00 -/+250.00 Hz		RO	Real
311	**Output Power** Motor Power is the calculated product of the torque reference and motor speed feedback. A 125ms filter is applied to this result. Positive values indicate motoring power; negative values indicate regenerative power. Note: The units were changed from kW to Hp for firmware version 2.003.	Default: Min/Max: Units:	0.00 -/+9999.00 Hp		RO	Real
312	**MotorFluxCurr FB** Displays the measured per unit motor flux producing current.	Default: Min/Max: Units:	0.0000 0.0000/1.0000 P.U.		RO	Real
313	**Heatsink Temp** Displays the measured temperature of the drive's heatsink.	Default: Min/Max: Units:	0.0000 -30.0000/200.0000 °C		RO	Real
314	**VPL Firmware Rev** Displays the major and minor revision levels of the drive's Velocity Position Loop (VPL) software. Notes: The default value was changed from 1.11 to 2.003 for firmware version 2.003. The default value was changed from 2.003 to 3.001 for firmware version 3.001. Changed all values to three decimal places for firmware version 4.001.	Default: Min/Max: Scale:	1.003 0.001/99.999 000		RO	16-bit Integer
315	**VPL Build Number** Displays the build number of the drive's Velocity Position Loop (VPL) software. Note: The default value was changed from 8001 to 1 for firmware version 2.003.	Default: Min/Max:	1 1/10000		RO	16-bit Integer

316 **SynchLink Status**

Indicates status of SynchLink™ functions.

- Bit 0 "FB Opt Prsnt" indicates the presence of an optional feedback daughter card.
- Bit 1 "Encdr0 Prsnt" indicates the presence of encoder 0.
- Bit 2 "Encdr1 Prsnt" indicates the presence of encoder 1.
- Bit 3 "In Sync" indicates SynchLink communications is synchronized.
- Bit 4 "Tx Active" indicates TX frames are being transmitted downstream from this node.
- Bit 5 "Rx Active" indicates RX frames are being received from nodes upstream.
- Bit 15 "Rx Data Enbl" indicates received data is being updated.

Note: Bit 8 "Open Wire" was changed to "Reserved", and bit 12 "SOB Present" and bit 14 "Reset Req'd" were added for firmware 2.004.
Refer to the *SynchLink System Design Guide*, publication 1756-TD008, for more information.

Options	Reserved	Reserved	Reserved	Reserved	Reserved	Reserved	Reserved	Reserved	Reserved	Reserved	Reserved	Reserved	Reserved	Reserved	Reserved	Reserved	Rx Data Enbl	Reset Req'd	Reserved	SOB Present	Reserved	Reserved	Reserved	Reserved	Reserved	Reserved	Rx Active	Tx Active	In Sync	Encdr1 Prsnt	Encdr0 Prsnt	FB Opt Prsnt
Default	x	x	x	x	x	x	x	x	x	x	x	x	x	x	x	x	0	0	x	0	x	x	x	x	x	x	0	0	0	0	0	0
Bit	31	30	29	28	27	26	25	24	23	22	21	20	19	18	17	16	15	14	13	12	11	10	9	8	7	6	5	4	3	2	1	0

0 = False
1 = True

317	**SL System Time** Displays the SynchLink system time counter.	Default: Min/Max: Units:	0 0/1048575 µs		RO	32-bit Integer
318	**Posit Spd Output** Final output of the position regulator.	Default: Min/Max: Units: Scale:	0.0000 -/+14112.0000 rpm Par 4 [Motor NP RPM] = 1.0 P.U.		RO	Real
319	**Selected Trq Ref** Displays the actual selected torque reference value after Par 110 [Speed/TorqueMode].	Default: Min/Max: Units:	0.0 -/+8.0 P.U. P.U.		RO	Real

320 **Exception Event1**

Indicates the presence of certain drive anomalies. In some cases, you may configure the drive's response to these events by entering values in the parameters of the fault/alarm configuration group of the utility file.

Options	PWM Asynchro	Precharge Er	MC Firmware	PWM Short	VPL/MC Comm	OverCurrent	Ground Fault	Trans Desat	Bus OverVolt	MC Commissn	Over Freq	Inertia Test	DSP Error	DSP Mem Err	Ext Fault In	Inv OL Trip	Inv OL Pend	Inv TempTrip	Inv TempPend	Motor Stall	Mtr OL Pend	Mtr OL Trip	Power Loss	SLink Comm	SLink HW	Ctrl EE Mem	FB Opt1 Loss	FB Opt0 Loss	Encdr1 Loss	Encdr0 Loss	SpdRef Decel	Abs OverSpd
Default	0	0	0	0	0	0	0	0	0	0	0	0	0	0	0	0	0	0	0	0	0	0	0	0	0	0	0	0	0	0	0	0
Bit	31	30	29	28	27	26	25	24	23	22	21	20	19	18	17	16	15	14	13	12	11	10	9	8	7	6	5	4	3	2	1	0

0 = False
1 = True

No.	Name Description	Values	Linkable	Read-Write	Data Type

321 **Exception Event2**

Indicates the presence of certain drive anomalies. Configure the drive's response to these events by entering values in the parameters of the fault/alarm configuration group of the utility file.
Note: Changed bit 14 to "NonCnfgAlarm" for firmware version 3.003.

Options	Lgx LinkChng	Lgx Closed	Lgx Timeout	Lgx OutOfRun	NetLoss DPI6	NetLoss DPI5	NetLoss DPI4	NetLoss DPI3	NetLoss DPI2	NetLoss DPI1	DPI Loss P6	DPI Loss P5	DPI Loss P4	DPI Loss P3	DPI Loss P2	DPI Loss P1	No Ctrl Devc	NonCnfgAlarm	Interp Synch	EnableHealth	NonCnfgAlarm	VoltFdbkLoss	BusUnderVolt	RidethruTime	SLink Mult	PowerEE Cksm	BrakeOL Trip	PSC Sys Flt2	PSC Sys Flt1	Ctrl EE Cksm	MC Command	+/- 12v Pwr
Default	0	0	0	0	0	0	0	0	0	0	0	0	0	0	0	0	0	0	0	0	0	0	0	0	0	0	0	0	0	0	0	0
Bit	31	30	29	28	27	26	25	24	23	22	21	20	19	18	17	16	15	14	13	12	11	10	9	8	7	6	5	4	3	2	1	0

0 = False
1 = True

322 **Exception Event3**

Indicates the presence of certain drive anomalies. Configure the drive's response to these events by entering values in the parameters of the fault/alarm configuration group of the utility file.

- Bit 11 "HH HW Ver" is sed to indicate a High Horsepower hardware version fault.
- Bit 12 "HH CurUnbInc" is used to indicate a High Horsepower output current unbalanced fault.
- Bit 13 "HH VltUnbInc" is used to indicate a High Horsepower Bus voltage unbalanced fault.
- Bit 29 "AnlgIn1 Loss" is used to indicate an Analog Input 1 loss fault.
- Bit 30 "AnlgIn2 Loss" is used to indicate an Analog Input 2 loss fault.
- Bit 31 "AnlgIn3 Loss" is used to indicate an Analog Input 3 loss fault.

Notes: Bits 16, 20 and 23 were added for firmware version 2.004. Bits 11, 12, 13, 29, 30 and 31 were added for firmware version 3.001. Changed bits 11, 12, 13, 21, and 28 to "NonCnfgAlarm" for firmware version 3.003. Bit 14 "NonCnfgAlarm" was added for firmware version 3.004.

Options	AnlgIn3 Loss	AnlgIn2 Loss	AnlgIn1 Loss	NonCnfgAlarm	Reserved	Reserved	Reserved	Reserved	NonCnfgAlarm	Reserved	NonCnfgAlarm	Posit Err	-Hrd OvrTrvl	+Hrd OvrTrvl	-Sft OvrTrvl	+Sft OvrTrvl	Reserved	NonCnfgAlarm	NonCnfgAlarm	NonCnfgAlarm	NonCnfgAlarm	HH PwrBdTemp	HH PwrEE Er	HHPrChrgCntc	HH PwrBd Prc	HH Drv Ovrld	HH FanFdbkLs	HH BusWtchDg	HH BusCRC Er	HH BusLinkLs	HH BusComDly	HH InPhaseLs
Default	0	0	0	0	x	x	x	x	0	x	0	0	0	0	0	0	x	0	0	0	0	0	0	0	0	0	0	0	0	0	0	0
Bit	31	30	29	28	27	26	25	24	23	22	21	20	19	18	17	16	15	14	13	12	11	10	9	8	7	6	5	4	3	2	1	0

0 = False
1 = True

323 **Fault Status 1**

Indicates the occurrence of exception events that have been configured as fault conditions. These events are from Par 320 [Exception Event1].

Options	PWM Asynchro	Precharge Er	MC Firmware	PWM Short	VPL/MC Comm	OverCurrent	Ground Fault	Trans Desat	Bus OverVolt	MC Commissn	Over Freq	Inertia Test	DSP Error	DSP Mem Err	Ext Fault In	Inv OL Trip	Inv OL Pend	Inv OTmpTrip	Inv OTmpPend	Motor Stall	Mtr OL Pend	Mtr OL Trip	Power Loss	SLink Comm	SLink HW	Ctrl EE Mem	FB Opt1 Loss	FB Opt0 Loss	Encdr1 Loss	Encdr0 Loss	SpdRef Decel	Abs OverSpd
Default	0	0	0	0	0	0	0	0	0	0	0	0	0	0	0	0	0	0	0	0	0	0	0	0	0	0	0	0	0	0	0	0
Bit	31	30	29	28	27	26	25	24	23	22	21	20	19	18	17	16	15	14	13	12	11	10	9	8	7	6	5	4	3	2	1	0

0 = False
1 = True

324 **Fault Status 2**

Indicates the occurrence of exception events that have been configured as fault conditions. These events are from Par 321 [Exception Event2]
Note: Changed bit 14 to "NonCnfgAlarm" for firmware version 3.003.

Options	Lgx LinkChng	Lgx Closed	Lgx Timeout	Lgx OutOfRun	NetLoss DPI6	NetLoss DPI5	NetLoss DPI4	NetLoss DPI3	NetLoss DPI2	NetLoss DPI1	DPI Loss P6	DPI Loss P5	DPI Loss P4	DPI Loss P3	DPI Loss P2	DPI Loss P1	No Ctrl Devc	NonCnfgAlarm	Interp Synch	EnableHealth	NonCnfgAlarm	VoltFdbkLoss	BusUnderVolt	RidethruTime	SLink Mult	PowerEE Cksm	BrakeOL Trip	PSC Sys Flt2	PSC Sys Flt1	Ctrl EE Cksm	MC Command	+/- 12v Pwr
Default	0	0	0	0	0	0	0	0	0	0	0	0	0	0	0	0	0	0	0	0	0	0	0	0	0	0	0	0	0	0	0	0
Bit	31	30	29	28	27	26	25	24	23	22	21	20	19	18	17	16	15	14	13	12	11	10	9	8	7	6	5	4	3	2	1	0

0 = False
1 = True

325 **Fault Status 3**

Indicates the occurrence of exception events that have been configured as fault conditions. These events are from Par 322 [Exception Event3].

- Bit 11 "HH HW Ver" is sed to indicate a High Horsepower hardware version fault.
- Bit 12 "HH CurUnbInc" is used to indicate a High Horsepower output current unbalanced fault.
- Bit 13 "HH VltUnbInc" is used to indicate a High Horsepower Bus voltage unbalanced fault.
- Bit 29 "AnlgIn1 Loss" is used to indicate an Analog Input 1 loss fault.
- Bit 30 "AnlgIn2 Loss" is used to indicate an Analog Input 2 loss fault.
- Bit 31 "AnlgIn3 Loss" is used to indicate an Analog Input 3 loss fault.

Notes: Bits 16, 20 and 23 were added for firmware version 2.004. Bits 11, 12, 13, 29, 30 and 31 were added for firmware version 3.001. Changed bit 21 to "Drive Homing" and bit 28 to "+/- 12v Pwr" for firmware version 3.003. Bit 14 "NonCnfgAlarm" was added for firmware version 3.004.

Options	AnlgIn3 Loss	AnlgIn2 Loss	AnlgIn1 Loss	NonCnfgAlarm	Reserved	Reserved	Reserved	Reserved	NonCnfgAlarm	Reserved	NonCnfgAlarm	Posit Err	-Hrd OvrTrvl	+Hrd OvrTrvl	-Sft OvrTrvl	+Sft OvrTrvl	Reserved	NonCnfgAlarm	NonCnfgAlarm	NonCnfgAlarm	NonCnfgAlarm	HH PwrBdTemp	HH PwrEE Er	HHPrChrgCntc	HH PwrBd Prc	HH Drv Ovrld	HH FanFdbkLs	HH BusWtchDg	HH BusCRC Er	HH BusLinkLs	HH BusComDly	HH InPhaseLs
Default	0	0	0	0	x	x	x	x	0	x	0	0	0	0	0	0	x	0	0	0	0	0	0	0	0	0	0	0	0	0	0	0
Bit	31	30	29	28	27	26	25	24	23	22	21	20	19	18	17	16	15	14	13	12	11	10	9	8	7	6	5	4	3	2	1	0

0 = False
1 = True

No.	Name Description	Values	Linkable	Read-Write	Data Type

326 **Alarm Status 1**

Indicates the occurrence of exception events that have been configured as alarm conditions. These events are from Par 320 [Exception Event1].

Options	NonCnfg Fault	Precharge Er	NonCnfg Fault	NonCnfg Fault	NonCnfg Fault	NonCnfg Fault	NonCnfg Fault	NonCnfg Fault	NonCnfg Fault	NonCnfg Fault	NonCnfg Fault	Inertia Test	NonCnfg Fault	NonCnfg Fault	Ext Fault In	Inv OL Trip	Inv OL Pend	Non Cnfg Fault	Inv TempPend	Motor Stall	Mtr OL Pend	Mtr OL Trip	NonCnfgFault	SLink Comm	NonCnfgFault	NonCnfgFault	FB Opt 1 Loss	FB Opt0 Loss	Encdr1 Loss	Encdr0 Loss	NonCnfgFault	NonCnfgFault
Default	0	0	0	0	0	0	0	0	0	0	0	0	0	0	0	0	0	0	0	0	0	0	0	0	0	0	0	0	0	0	0	0
Bit	31	30	29	28	27	26	25	24	23	22	21	20	19	18	17	16	15	14	13	12	11	10	9	8	7	6	5	4	3	2	1	0

0 = False
1 = True

327 **Alarm Status 2**

Indicates the occurrence of exception events that have been configured as alarm conditions. These events are from Par 321 [Exception Event2]
Note: Changed bit 14 to "NonCnfgAlarm" for firmware version 3.003.

Options	Lgx LinkChng	Lgx Closed	Lgx Timeout	Lgx OutOfRun	NetLoss DPI6	NetLoss DPI5	NetLoss DPI4	NetLoss DPI3	NetLoss DPI2	NetLoss DPI1	DPI Loss P6	DPI Loss P5	DPI Loss P4	DPI Loss P3	DPI Loss P2	DPI Loss P1	NonCnfg Fault	MC CML Fail	Interp Synch	EnableHealth	Runtime Data	VoltFdbkLoss	BusUnderVolt	NonCnfg Fault	Slink Mult	NonCnfg Fault	BrakeOL Trip	NonCnfg Fault	NonCnfg Fault	NonCnfg Fault	MC Command	NonCnfg Fault
Default	0	0	0	0	0	0	0	0	0	0	0	0	0	0	0	0	0	0	0	0	0	0	0	0	0	0	0	0	0	0	0	0
Bit	31	30	29	28	27	26	25	24	23	22	21	20	19	18	17	16	15	14	13	12	11	10	9	8	7	6	5	4	3	2	1	0

0 = False
1 = True

328 **Alarm Status 3**

Indicates the occurrence of exception events that have been configured as alarm conditions. These events are from Par 322 [Exception Event3].

- Bit 11 "HH HW Ver" indicates a non-configurable High Horsepower hardware version fault.
- Bit 12 "HH CurUnbInc" indicates a non-configurable High Horsepower output current unbalanced fault.
- Bit 13 "HH VltUnbInc" indicates a non-configurable High Horsepower Bus voltage unbalanced fault.
- Bit 14 "HH Bus Data" indicates when Communication Bus data are mismatched between left side unit and right side unit.
- Bit 21 "Drive Homing" when the drive is in "Drive Homing" mode (parameter Par 740 [Position Control] bit 24 "Find Home" or bit 27 "Return Home" is set to "1") this alarm is triggered and the drive moves to a home position automatically.
- Bit 24 "Drv Waking" when set, the drive is in wake mode and could start at any time.
- Bit 28 "+/- 12v Pwr" identifies when the12V dc control voltage is outside the tolerance range. The positive voltage power exceeds +15.50 V dc and the negative voltage power exceeds -15.50V DC.
- Bit 29 "AnIgIn1 Loss" indicates a non-configurable Analog Input 1 loss fault.
- Bit 30 "AnIgIn2 Loss" indicates a non-configurable Analog Input 2 loss fault.
- Bit 31 "AnIgIn3 Loss" indicates a non-configurable Analog Input 3 loss fault.

Notes: Bits 16, 20 and 23 were added for firmware version 2.004. Bits 11, 12, 13, 29, 30 and 31 were added for firmware version 3.001. Changed bit 21 to "Drive Homing" and bit 28 to "+/- 12v Pwr" for firmware version 3.003. Bit 14 "HH Bus Data" was added for firmware version 3.004. Bit 24 "Drv Waking" and 27 "RideThruAlrm" were added for firmware version 5.002.

Options	NonCnfg Fault	NonCnfg Fault	NonCnfg Fault	+/- 12v Pwr	RideThruAlrm	Reserved	Reserved	Drv Waking	Stahl Optics	Reserved	Drive Homing	Posit Err	-Hrd OvrTrvl	+Hrd OvrTrvl	-Sft OvrTrvl	+Sft OvrTrvl	Reserved	HH Bus Data	HH VltUnbInc	HH CurrUnbInc	HH HW Ver	NonCnfg Fault	NonCnfg Fault	NonCnfg Fault	NonCnfg Fault	NonCnfg Fault	NonCnfg Fault	NonCnfg Fault	NonCnfg Fault	NonCnfg Fault	NonCnfg Fault	HH InPhaseLs
Default	0	0	0	0	0	x	x	0	0	0	0	0	0	0	0	0	x	0	0	0	0	0	0	0	0	0	0	0	0	0	0	0
Bit	31	30	29	28	27	26	25	24	23	22	21	20	19	18	17	16	15	14	13	12	11	10	9	8	7	6	5	4	3	2	1	0

0 = False
1 = True

329 **Fault TP Sel**

Enter or write a value to select Fault data displayed in Par 330 [Fault TP Data].

- 24 "ElpsSec.mSec" = Elapsed time in seconds and milliseconds since the last power up
- 25 "ElpsMin.Sec" = Elapsed time in minutes and seconds since the last power up
- 26 "ElpsHour.Min" = Elapsed time in hours and minutes since the last power up
- 27 "ElpsDay.Hour" = Elapsed time in days and hours since the last power up

Note: 'Values 24 - 27 were added for firmware version 4.002.

Default: 0 = "Zero"

Options:

0 = "Zero"	14 = "MtrStallTime"
1 = "Abs OverSpd"	15 = "MC Handshake"
2 = "EE Pwr State"	16 = "VPL Handshak"
3 = "Inv DataStat"	17 = "MC Diag"
4 = "Run Time Err"	18 = "PwrLossState"
5 = "LowBus Thres"	19 = "12 volt loss"
6 = "LowBus Detct"	20 = "PwrEE Chksum"
7 = "PwrLosBusVlt"	21 = "Db Read Cnt1"
8 = "MCPLosBusVlt"	22 = "Db Read Cnt2"
9 = "MC Flt Reset"	23 = "Db Read Cnt3"
10 = "Ext Flt Stat"	24 = "ElpsSec.mSec"
11 = "VPL TaskErr"	25 = "Elps Min.Sec"
12 = "Mtr OL Input"	26 = "ElpsHour.Min"
13 = "Mtr OL Outpt"	27 = "ElpsDay.Hour"

330 **Fault TP Data**

Displays the data selected by Par 329 [Fault TP Sel].

Default: 0
Min/Max: -/+2200000000
Linkable: | Read-Write: RO | Data Type: Real

331 **LstFaultStopMode**

Displays the action taken by the drive during the last fault. When a fault occurs, an action is taken as a result of that fault.

Default: 0 = "Ignore"

Options:

0 = "Ignore"	3 = "Flt RampStop"
1 = "Alarm"	4 = "FltCurLimStop"
2 = "FltCoastStop"	

No.	Name Description	Values	Linkable	Read-Write	Data Type

332 **700L EventStatus**

Indicates the presence of certain drive anomalies for PowerFlex 700L (LiquiFlo) drive.

- Bit 0 "Dsat Phs U1" indicates that the primary structure detected a Dsat on phase U.
- Bit 1 "Dsat Phs V1" indicates that the primary structure detected a Dsat on phase V.
- Bit 2 "Dsat Phs W" indicates that the primary structure detected a Dsat on phase W.
- Bit 3 "Ovr Current1" indicates that the primary structure detected an over current.
- Bit 4 "Ovr Volt1" indicates that the primary structure detected an over voltage.
- Bit 5 "Asym DcLink1" indicates that the primary structure detected an unbalanced DC Link.
- Bit 6 "Pwr Suply1" indicates that the primary structure detected a power supply failure.
- Bit 7 "HW Disable1" indicates that the primary structure detected a hardware disable.
- Bit 8 "Latch Err1" indicates that the primary structure fault was generated but no indicating bit was set.
- Bit 14 "Cnv NotLogin" the converter was expected but none logged in.
- Bit 15 "Cnv NotStart" the converter was commanded to start but did not become active.
- Bit 16 "Dsat Phs U2" the second structure detected a Dsat on phase U.
- Bit 17 "Dsat Phs V2" the second structure detected a Dsat on phase V.
- Bit 18 "Dsat Phs W2" the second structure detected a Dsat on phase W.
- Bit 19 "Ovr Current2" the second structure detected an over current.
- Bit 20 "Ovr Volt2" the second structure detected an over voltage.
- Bit 21 "Asym DcLink2" the second structure detected an unbalanced DC Link.
- Bit 22 "Pwr Suply2" the second structure detected a power supply failure.
- Bit 23 "HW Disable2" the second structure detected a hardware disable.
- Bit 24 "Latch Err2" the second structure fault was generated but no indicating bit was set.

Note: This parameter was added for firmware version 2.003.

Options	Reserved	Reserved	Reserved	Reserved	Reserved	Reserved	Reserved	Latch Err2	HW Disable2	Pwr Suply2	Asym DcLink2	Ovr Volt2	Ovr Current2	Dsat Phs W2	Dsat Phs V2	Dsat Phs U2	Cnv NotStart	Cnv NotLogin	Reserved	Reserved	Reserved	Reserved	Reserved	Latch Err1	HW Disable1	Pwr Suply1	Asym DcLink1	Ovr Volt1	Ovr Current1	Dsat Phs W1	Dsat Phs V1	Dsat Phs U1
Default	x	x	x	x	x	x	x	0	0	0	0	0	0	0	0	0	0	0	x	x	x	x	x	0	0	0	0	0	0	0	0	0
Bit	31	30	29	28	27	26	25	24	23	22	21	20	19	18	17	16	15	14	13	12	11	10	9	8	7	6	5	4	3	2	1	0

0 = False
1 = True

333 **700L FaultStatus**

Indicates the occurrence of exception events that have been configured as fault conditions for PowerFlex 700L (LiquiFlo) drive.

- Bit 0 "Dsat Phs U1" indicates that the primary structure detected a Dsat on phase U.
- Bit 1 "Dsat Phs V1" indicates that the primary structure detected a Dsat on phase V.
- Bit 2 "Dsat Phs W" indicates that the primary structure detected a Dsat on phase W.
- Bit 3 "Ovr Current1" indicates that the primary structure detected an over current.
- Bit 4 "Ovr Volt1" indicates that the primary structure detected an over voltage.
- Bit 5 "Asym DcLink1" indicates that the primary structure detected an unbalanced DC Link.
- Bit 6 "Pwr Suply1" indicates that the primary structure detected a power supply failure.
- Bit 7 "HW Disable1" indicates that the primary structure detected a hardware disable.
- Bit 8 "Latch Err1" indicates that the primary structure fault was generated but no indicating bit was set.
- Bit 14 "Cnv NotLogin" indicates that the converter expected but none logged in.
- Bit 15 "Cnv NotStart" indicates that the converter commanded to start but did not become active.
- Bit 16 "Dsat Phs U2" indicates that the second structure detected a Dsat on phase U.
- Bit 17 "Dsat Phs V2" indicates that the second structure detected a Dsat on phase V.
- Bit 18 "Dsat Phs W2" indicates that the second structure detected a Dsat on phase W.
- Bit 19 "Ovr Current2" indicates that the second structure detected an over current.
- Bit 20 "Ovr Volt2" indicates that the second structure detected an over voltage.
- Bit 21 "Asym DcLink2" indicates that the second structure detected an unbalanced DC Link.
- Bit 22 "Pwr Suply2" indicates that the second structure detected a power supply failure.
- Bit 23 "HW Disable2" indicates that the second structure detected a hardware disable.
- Bit 24 "Latch Err2" indicates that the second structure fault was generated but no indicating bit was set.

Note: This parameter was added for firmware version 2.003.

Options	Reserved	Reserved	Reserved	Reserved	Reserved	Reserved	Reserved	Latch Err2	HW Disable2	Pwr Suply2	Asym DcLink2	Ovr Volt2	Ovr Current2	Dsat Phs W2	Dsat Phs V2	Dsat Phs U2	Cnv NotStart	Cnv NotLogin	Reserved	Reserved	Reserved	Reserved	Reserved	Latch Err1	HW Disable1	Pwr Suply1	Asym DcLink1	Ovr Volt1	Ovr Current1	Dsat Phs W1	Dsat Phs V1	Dsat Phs U1
Default	x	x	x	x	x	x	x	0	0	0	0	0	0	0	0	0	0	0	x	x	x	x	x	0	0	0	0	0	0	0	0	0
Bit	31	30	29	28	27	26	25	24	23	22	21	20	19	18	17	16	15	14	13	12	11	10	9	8	7	6	5	4	3	2	1	0

0 = False
1 = True

No.	Name Description	Values	Linkable	Read-Write	Data Type
334	**700L AlarmStatus** Indicates the occurrence of exception events that have been configured as alarm conditions for PowerFlex 700L (LiquiFlo) drive. • Bit 0 "NonCnfgFault" Not configured as alarm. • Bit 1 "NonCnfgFault" Not configured as alarm. • Bit 2 "NonCnfgFault" Not configured as alarm. • Bit 3 "NonCnfgFault" Not configured as alarm. • Bit 4 "NonCnfgFault" Not configured as alarm. • Bit 5 "NonCnfgFault" Not configured as alarm. • Bit 6 "NonCnfgFault" Not configured as alarm. • Bit 7 "NonCnfgFault" Not configured as alarm. • Bit 8 "NonCnfgFault" Not configured as alarm. • Bit 14 "NonCnfgFault" Not configured as alarm. • Bit 15 "NonCnfgFault" Not configured as alarm. • Bit 16 "NonCnfgFault" Not configured as alarm. • Bit 17 "NonCnfgFault" Not configured as alarm. • Bit 18 "NonCnfgFault" Not configured as alarm. • Bit 19 "NonCnfgFault" Not configured as alarm. • Bit 20 "NonCnfgFault" Not configured as alarm. • Bit 21 "NonCnfgFault" Not configured as alarm. • Bit 22 "NonCnfgFault" Not configured as alarm. • Bit 23 "NonCnfgFault" Not configured as alarm. • Bit 24 "NonCnfgFault" Not configured as alarm. Note: This parameter was added for firmware version 2.003.				

Options	Reserved	Reserved	Reserved	Reserved	Reserved	Reserved	Reserved	NonCnfgFault	NonCnfgFault	NonCnfgFault	NonCnfgFault	NonCnfgFault	NonCnfgFault	NonCnfgFault	NonCnfgFault	NonCnfgFault	NonCnfgFault	NonCnfgFault	Reserved	Reserved	Reserved	Reserved	Reserved	NonCnfgFault	NonCnfgFault	NonCnfgFault	NonCnfgFault	NonCnfgFault	NonCnfgFault	NonCnfgFault	NonCnfgFault	NonCnfgFault	NonCnfgFault	NonCnfgFault	NonCnfgFault
Default	x	x	x	x	x	x	x	0	0	0	0	0	0	0	0	0	0	0	x	x	x	x	x	0	0	0	0	0	0	0	0	0	0	0	0
Bit	31	30	29	28	27	26	25	24	23	22	21	20	19	18	17	16	15	14	13	12	11	10	9	8	7	6	5	4	3	2	1	0				

0 = False
1 = True

No.	Name Description	Values	Linkable	Read-Write	Data Type
335	**Abs OverSpd Lim** Sets an incremental speed above Par 76 [Fwd Speed Limit] and below Par 75 [Rev Speed Limit] that is allowable before the drive indicates its speed is out of range.	Default: 352.8000 Min/Max: 0.0000/1750.0000 Units: rpm Scale: Par 4 [Motor NP RPM] = 1.0 P.U.		RW	Real
336	**Motor OL Factor** Sets the minimum level of current that causes a motor overload trip under continuous operation. Current levels below this value will not result in an overload trip. For example, a service factor of 1.15 implies continuous operation up to 115% of nameplate motor current.	Default: 1.1500 Min/Max: 1.0000/2.0000 Units: P.U.		RW	Real
337	**Mtr I2T Curr Min** Sets the minimum current threshold for the motor overload (I^2T) function. The value indicates minimum current at the minimum speed, Par 338 [Mtr I2T Spd Min], and these are the first current/speed breakpoint. From this point the current threshold is linear to the value specified by Par 336 [Motor OL Factor].	Default: 0.5000 Min Max: 0.0500/2.0000 Units: P.U.		RW	Real
338	**Mtr I2T Spd Min** Sets the minimum speed for the motor overload (I^2T) function. The value indicates minimum speed below the minimum current threshold Par 337 [Mtr I2T Curr Min], and these are the first current/speed breakpoint. From this point the current threshold is linear to the value specified by the motor service factor Par 336 [Motor OL Factor]. Set this parameter to the minimum value for the motor overload trip to vary in time at low speeds. For more information, please see Motor Overload on page 164.	Default: 1.0000 Min/Max: 0.0500/1.0000 Units: P.U.		RW	Real
339	**Mtr I2T Calibrat** Sets the current calibration level for the motor overload (I^2T) function. The value indicates the current level that the drive will fault at this current in 60 seconds.	Default: 2.0000 Min/Max: 1.1000/4.0000 Units: P.U.		RW	Real
340	**Mtr I2T Trp ThrH** Displays the trip threshold current for the motor overload (I^2T) function. The value depends on the motor speed, and is calculated from the minimum current Par 337 [Mtr I2T Curr Min], the minimum speed Par 338 [Mtr I2T Spd Min] and the motor service factor Par 336 [Motor OL Factor].	Default: 1.1500 Min/Max: 0.0500/2.0000 Units: P.U.		RO	Real
341	**Mtr I2T Count** The accumulator for Motor Overload detection (Motor I^2T function). When the motor runs at the over rated motor current, the accumulator starts counting up. If the motor runs at below rated motor current, the accumulator counts down. If the value of this parameter exceeds 0.5, the "Motor OLoad Pend" alarm (fault 12) occurs. If the value of this parameter exceeds 1.0, the "Motor OLoad Trip" fault (fault 11) occurs. The value of this parameter is saved in non-volatile memory after power-down if Par 153 [Control Options], bit 20 "Motor OL Ret" is on. Toggling bit 20 of Par 153 [Control Options] clears the value of this parameter. Note: This parameter was added for firmware version 3.001.	Default: 0.0 Min/Max: 0.0/1.5		RO	Real

No.	Name Description	Values		Linkable	Read-Write	Data Type
343	**OL OpnLp CurrLim** Displays the current limit set by the Open Loop Inverter Overload (OL) function. This function sets this current limit based on stator current feedback and the current ratings of the drive - continuous and short term (three-second rating). Typically the drive will have a sixty-second rating of 110% of continuous current and a three-second rating at 150% of the continuous. Under normal operating conditions, the open loop function sets this current limit to the short term (three-second) rating. If the function detects an overload, it lowers the limit to the continuous level. After a period of time (typically one to three minutes), the function returns the limit to the short term rating.	Default: Min/Max: Units:	8.0000 0.0000/8.0000 P.U.		RO	Real
344	**OL ClsLp CurrLim** Displays the current limit set by the Closed Loop Inverter Overload (OL) function. This function will set a current limit level based on the values in Par 355 [Iq Ref Limited], Par 313 [Heatsink Temp] and the thermal characteristics of the drive. Under normal operating conditions, the function typically sets the limit at 250% of the continuous drive rating. If the function determines that the power device junction temperature is approaching maximum, it will reduce this limit to the level required to prevent additional heating of the inverter. This level could be as low as the continuous rating of the drive. If the inverter temperature decreases, the function will raise the limit to a higher level. Disable this protection by setting bit 13 "OL ClsLpDsbl" of Par 153 [Control Options].	Default: Min/Max: Units:	8.0000 0.0000/8.0000 P.U.		RO	Real
345	**Drive OL JnctTmp** Displays the calculated junction temperature of the power semiconductors in the inverter. The calculation uses the values of Par 313 [Heatsink Temp], Par 355 [Iq Ref Limited], and inverter thermal characteristics contained in the power EE memory. If this value exceeds the maximum junction temperature (visible in Par 348 [Drive OL TP Data] when Par 347 [Drive OL TP Sel] option 12 "fJunTmprMax" is selected), two faults occur: Inverter Overtemperature Fault (fault code 15), and Junction Overtemperature Fault - indicated by bit 7 "Jnc OverTemp" of Par 346 [Drive OL Status].	Default: Min/Max: Units:	0.0000 -50.0000/300.0000 °C		RO	Real

346 Drive OL Status

Indicates the status of various overload (OL) conditions.

- Bit 0 "NTC Shorted" indicates the Negative Temperature Coefficient (NTC) device has a short circuit.
- Bit 1 "NTC Open" indicates the NTC has an open circuit.
- Bit 2 "HS OverTemp" indicates heatsink temperature is above 105 °C for ratings 1.1…11.0 A, 115 °C for 14…34 A, 100 °C for 40…52 A.
- Bit 3 "HS Pending" indicates heatsink temperature is above 95C for ratings 1.1…11 A, 105 °C for 14…34 A, 90 °C for 40…52 A.
- Bit 4 "IT Trip" indicates the drive has exceed the 3 second rating of either the 150% normal duty rating or 200% of the heavy duty rating.
- Bit 5 "IT Pending" indicates the drive OL integrator is at 50% of the time out time.
- Bit 6 "IT Foldback" indicates the drive closed loop current limit is in a fold back condition. The value of the fold back is proportional to the calculated junction temperature.
- Bit 7 "Jnc Over Temp" indicates the junction temperature has exceeded the maximum temperature for the power semiconductor device.

Options	Reserved	Reserved	Reserved	Reserved	Reserved	Reserved	Reserved	Reserved	Jnc OverTemp	IT Foldback	IT Pending	IT Trip	HS Pending	HS OverTemp	NTC Open	NTC Shorted
Default	x	x	x	x	x	x	x	x	0	0	0	0	0	0	0	0
Bit	15	14	13	12	11	10	9	8	7	6	5	4	3	2	1	0

0 = False
1 = True

No.	Name Description	Values		Linkable	Read-Write	Data Type
347	**Drive OL TP Sel** Enter or write a value to select the drive overload data displayed in Par 348 [Drive OL TP Data]. Note: Value 44 "HH PwrBdTemp" was added for firmware version 2.004. Added values 45 "IGBT CndLoss", 46 "IGBT SwtLoss" and 47 "Fwd CndLoss" for firmware version 3.003.	Default: Options:	0 = "Zero" 0 = "Zero" 1 = "fAbsIsCurr" 2 = "fDelta" 3 = "fAbsIqCurr" 4 = "f0L_I" 5 = "f0L_m" 6 = "f0L_k" 7 = "f0L_g" 8 = "f0L_intg" 9 = "fCL_intg" 10 = "fInv0LClim" 11 = "fJuncDegc" 12 = "fJunTmprMax" 13 = "f60sPUCur" 14 = "f60sAmp" 15 = "f3sPUCur" 16 = "f3sAmp" 17 = "fRatioInvMtr" 18 = "fRatioMtrInv" 19 = "iConvertStat" 20 = "fIgbtThres" 21 = "fIgbtSlope" 22 = "fIgbtEnergy" 23 = "fIgbtJuncase" 24 = "fIgbtWatts" 25 = "iIgbtPerMod" 26 = "fFdThres" 27 = "fFdSlope" 28 = "fFdJunCase" 29 = "fFdWatts" 30 = "fMaxHsDegc" 31 = "fCsImp" 32 = "fCsFltr" 33 = "fPwmHz" 34 = "fElecHz" 35 = "fModIdex" 36 = "fBoost" 37 = "fTotalWatts" 38 = "fHSDegc" 39 = "iAdconv" 40 = "Jct Temp" 41 = "Jct Tmp HiHp" 42 = "Jct Tmp Fwd" 43 = "HH Loss Intg" 44 = "HH PwrBdTemp" 45 = "IGBT CndLoss" 46 = "IGBT SwtLoss" 47 = "Fwd CndLoss"			
348	**Drive OL TP Data** Displays the value selected by Par 347 [Drive OL TP Sel].	Default: Min/Max:	0.0000 -/+2200000000.0000		RO	Real
350	**Iq Actual Ref** Displays the value of motor current reference that is present at the output of the divide by flux calculation.	Default: Min/Max: Units:	0.0000 -/+8.0000 P.U. P.U.		RO	Real

No.	Name Description	Values		Linkable	Read-Write	Data Type
351	**Iq Ref Trim** Provides an external source to command, trim or offset the internal motor current reference. This value is summed with Par 350 [Iq Actl Ref] before the current limit is applied. Scaling is in per unit motor current.	Default: Min/Max: Units:	0.0000 -/+8.0000 P.U. P.U.	Y	RW	Real
352	**Is Actual Lim** Displays the largest allowable stator motor current. The range of allowable motor current is limited by the maximum drive current. Scaling is in per unit motor current.	Default: Min/Max: Units:	1.0000 0.0000/8.0000 P.U.		RO	Real
353	**Iq Actual Lim** Displays the largest allowable torque producing (Iq) motor current. The range of allowable Iq motor current is limited by the maximum drive current and is adjusted by the motor flux current. Scaling is in per unit Iq motor current.	Default: Min/Max: Units:	1.0000 0.0000/8.0000 P.U.		RO	Real
354	**Iq Rate Limit** Enter the maximum rate of change for Current Reference, in per unit current / sec. Par 90 [Spd Reg BW] will be limited to 2/3 of this value.	Default: Min/Max: Units:	1000.0000 5.0000/10000.0000 /s	Y	RW	Real
355	**Iq Ref Limited** Displays the current reference output of the rate limiter.	Default: Min/Max: Units:	0.0000 -/+8.0000 P.U. P.U.		RO	Real
356	**Mtr Current Lim** Sets the largest allowable motor stator current. The online maximum value of this parameter is Par 2 [Motor NP FLA]. The online minimum value is 105% of the current indicated in Par 488 [Flux Current].	Default: Min/Max: Units:	1.5000 0.0000/Calculated P.U.	Y	RW	Real
357	**Curr Ref TP Sel** Enter or write a value to select current reference data displayed in Par 358 [Curr Ref TP Data]. Note: Added values 20. . .52 for firmware version 3.003. Added value 53 for firmware version 4.001.	Default: Options:	0 = "Zero" 0 = "Zero" 1 = "Iq Sum" 2 = "Iq Lim In" 3 = "Iq Lim Out" 4 = "Iq Rate Stat" 5 = "IqLmOutNoFil" 6 = "MtrCrLimStat" 7 = "Lim'dMtrCrLm" 8 = "Iq Act Limit" 9 = "Iq Cal Gain" 10 = "Min Lim Stat" 11 = "Iq Prescale" 12 = "Iqtols Stat" 13 = 'Flux Status" 14 = "Flux LPF Out" 15 = "Is Per Unit" 16 = "Iq Actl +Lim" 17 = "Iq Actl -Lim" 18 = "Flx Filt Hld" 19 = "Inverse Flux" 20 = "Impedance P.U." 21 = "ImpedanceOhm" 22 = "Rated We" 23 = "Leak Induct" 24 = "Rated Torque" 25 = "Rated Ids" 26 = "Rated Iqs" 27 = "Rated Vds" 28 = "Rated Vqs" 29 = "RatedLamdVds" 30 = "RatedLamdIds" 31 = "RatedLamd ds" 32 = "RatedLamd qs" 33 = "Iqs" 34 = "Ids" 35 = "Vqs" 36 = "Vds" 37 = "We" 38 = "Torque" 39 = "Torque Filtr" 40 = "Lamda Ids" 41 = "Lamda Iqs" 42 = "Lamda Vds" 43 = "Lamda Vqs" 44 = "Lamda ds" 45 = "Lamda qs" 46 = "Lamda ds Flt" 47 = "Lamda qs Flt" 48 = "Torque Ref" 49 = "Iq Reference" 50 = "1/Motor Pole" 51 = "1/Rated Iqs" 52 = "1/Rated Torq" 53 = "Rs Temp Coef"			
358	**Curr Ref TP Data** Sets the limit value for the motor torque producing current.	Default: Min/Max: Units:	0.0000 -/+8.0000 P.U. P.U.		RO	Real
359	**Motor Flux Est** The Q-axis motor voltage is divided by the motor frequency while field weakening is active. This value is used to convert the torque command to a motor current (Iqs) command.	Default: Min/Max: Units:	0.0000 -/+8.0000 P.U. P.U.		RO	Real
360	**Min Flux** Sets the smallest level of flux used to convert Par 303 [Motor Torque Ref] to a current reference above base speed. Note: Changed the minimum value from "0.2500" to "0.1000" for firmware version 4.001.	Default: Min/Max: Units:	0.2500 0.1000/1.0000 P.U.	Y	RW	Real
361	**Flx LpassFilt BW** Sets the bandwidth of the low pass filter that adjusts the response of the flux estimate used in the torque to current conversion. Since the field time constant varies between motors, a better control response may be obtained by adjusting the filter time constant. Normally this parameter is not changed unless a significant disturbance occurs as the motor enters field weakening AND Par 360 [Min Flux] is less than 1 per unit.	Default: Min/Max: Units:	12.0000 0.5000/100.0000 rad/s	Y	RW	Real
362 A	**Current Limit Gain** Sets the responsiveness of the current limit. This parameter should not be changed by the user. Note: This parameter was added for firmware version 2.003.	Default: Min/Max:	250 0/10000		RW	16-bit Integer
363 A	**Ki Current Limit** Current Limit Integral gain. This gain is applied to the current limit error signal to eliminate steady state current limit error. A larger value increases overshoot during a step of motor current/load. This parameter should not be changed by the user. Note: This parameter was added for firmware version 2.003.	Default: Min/Max:	1500 0/10000		RW	16-bit Integer

No.	Name Description	Values		Linkable	Read-Write	Data Type
364 A	**Kd Current Limit** Current Limit Derivative gain. This gain is applied to the sensed motor current to anticipate a current limit condition. A larger value reduces overshoot of the current relative to the current limit value. This parameter should not be changed by the user. Note: This parameter was added for firmware version 2.003.	Default: Min/Max:	500 0/10000		RW	16-bit Integer
365 366 367	**Fdbk LsCnfg Pri** **Fdbk LsCnfg Alt** **Fdbk LsCnfgPosit** Enter a value to configure the drive's response to an Encoder 0/1 Loss exception event. • 1 - Alarm configures the drive to continue running and set the appropriate alarm bit when this event occurs. • 2 - FltCoastStop configures the drive to perform a coast stop and set the appropriate fault bit, in response to this event.	Default: Default: Default: Options:	2 = "FltCoastStop" 1 = "Alarm" 1 = "Alarm" 1 = "Alarm" 2 = "FltCoastStop"			
368	**Cnv NotLogin Cfg** Configures the 700L drive's response when the active convertor is not logged-in via a DPI port. Note: This parameter was added for firmware version 3.001.	Default: Options:	2 = "FltCoastStop" 0 = "Ignore"" 1 = "Alarm" 2 = "FltCoastStop"			
369	**Brake OL Cnfg** Enter a value to configure the drive's response to a Brake Overload (OL) Trip exception event. This event is triggered when a Dynamic Brake (DB) overload condition occurs. • 0 - Ignore configures the drive to continue running, as normal, when this event occurs. • 1 - Alarm configures the drive to continue running and set the appropriate alarm bit when this event occurs. • 2 - FltCoastStop configures the drive to perform a coast stop and set the appropriate fault bit, in response to this event. • 3 - Flt RampStop configures the drive to perform a ramp stop and set the appropriate fault bit, in response to this event. • 4 - FltCurLimStp configures the drive to perform a current-limit stop and set the appropriate fault bit, in response to this event.	Default: Options:	1 = "Alarm" 0 = "Ignore" 1 = "Alarm" 2 = "FltCoastStop" 3 = "Flt RampStop" 4 = "FltCurLimStp"			
370	**HiHp InPhsLs Cfg** Selector for the input phase loss configuration. • 0 - Ignore configures the drive to continue running, as normal, when this event occurs. • 1 - Alarm configures the drive to continue running and set the appropriate alarm bit when this event occurs. • 2 - FltCoastStop configures the drive to perform a coast stop and set the appropriate fault bit in response to this event. • 3 - Flt RampStop configures the drive to perform a ramp stop and set the appropriate fault bit in response to this event. • 4 - FltCurLimStp configures the drive to perform a current-limit stop and set the appropriate fault bit in response to this event. Notes: The default value was changed from 1 "Alarm" to 3 "Flt RampStop" for firmware version 3.001. The default value was changed from 3 to 2 for firmware version 4.002.	Default Options:	2 = "FltCoastStop" 0 = "Ignore" 1 = "Alarm" 2 = "FltCoastStop" 3 = "Flt RampStop" 4 = "FltCurLimStp"			
371	**Mtr OL Trip Cnfg** Enter a value to configure the drive's response to a Motor Overload (OL) Trip exception event. • 0 - Ignore configures the drive to continue running, as normal, when this event occurs. • 1 - Alarm configures the drive to continue running and set the appropriate alarm bit when this event occurs. • 2 - FltCoastStop configures the drive to perform a coast stop and set the appropriate fault bit, in response to this event. • 3 - Flt RampStop configures the drive to perform a ramp stop and set the appropriate fault bit, in response to this event. • 4 - FltCurLimStp configures the drive to perform a current-limit stop and set the appropriate fault bit, in response to this event.	Default Options:	2 = "FltCoastStop" 0 = "Ignore" 1 = "Alarm" 2 = "FltCoastStop" 3 = "Flt RampStop" 4 = "FltCurLimStp"			
372	**Mtr OL Pend Cnfg** Enter a value to configure the drive's response to a Motor Overload (OL) Pending exception event. • 0 - Ignore configures the drive to continue running, as normal, when this event occurs. • 1 - Alarm configures the drive to continue running and set the appropriate alarm bit when this event occurs. • 2 - FltCoastStop configures the drive to perform a coast stop and set the appropriate fault bit, in response to this event. • 3 - Flt RampStop configures the drive to perform a ramp stop and set the appropriate fault bit, in response to this event. • 4 - FltCurLimStp configures the drive to perform a current-limit stop and set the appropriate fault bit, in response to this event.	Default Options:	1 = "Alarm" 0 = "Ignore" 1 = "Alarm" 2 = "FltCoastStop" 3 = "Flt RampStop" 4 = "FltCurLimStp"			
373	**Motor Stall Time** Enter a value to specify the time delay between when the drive detects a Motor Stall condition and when it declares the exception event.	Default: Min/Max: Units:	1.0000 0.1000/3000.0000 s	Y	RW	Real
374	**Motor Stall Cnfg** Enter a value to configure the drive's response to a Motor Stall exception event. • 0 - Ignore configures the drive to continue running, as normal, when this event occurs. • 1 - Alarm configures the drive to continue running and set the appropriate alarm bit when this event occurs. • 2 - FltCoastStop configures the drive to perform a coast stop and set the appropriate fault bit, in response to this event. • 3 - Flt RampStop configures the drive to perform a ramp stop and set the appropriate fault bit, in response to this event. • 4 - FltCurLimStp configures the drive to perform a current-limit stop and set the appropriate fault bit, in response to this event.	Default Options:	0 = "Ignore" 0 = "Ignore" 1 = "Alarm" 2 = "FltCoastStop" 3 = "Flt RampStop" 4 = "FltCurLimStp"			

No.	Name Description	Values		Linkable	Read-Write	Data Type
375	**Inv OT Pend Cnfg** Enter a value to configure the drive's response to a Inverter Over-Temperature (OT) Pending exception event. This event is triggered when the Inverter Negative Temperature Coefficient (NTC) function detects the heat-sink temperature reaches to the overload warning level. • 0 - Ignore configures the drive to continue running, as normal, when this event occurs. • 1 - Alarm configures the drive to continue running and set the appropriate alarm bit when this event occurs. • 2 - FltCoastStop configures the drive to perform a coast stop and set the appropriate fault bit, in response to this event. • 3 - Flt RampStop configures the drive to perform a ramp stop and set the appropriate fault bit, in response to this event. • 4 - FltCurLimStp configures the drive to perform a current-limit stop and set the appropriate fault bit, in response to this event.	Default Options:	1 = "Alarm" 0 = "Ignore" 1 = "Alarm" 2 = "FltCoastStop" 3 = "Flt RampStop" 4 = "FltCurLimStp"			
376	**Inv OL Pend Cnfg** Enter a value to configure the drive's response to an Inverter Overload (OL) Pending exception event. This event is triggered when one of the Inverter Protection Current-Over-Time functions (Open Loop or Closed Loop) detects current and temperature at warning levels. • 0 - Ignore configures the drive to continue running, as normal, when this event occurs. • 1 - Alarm configures the drive to continue running and set the appropriate alarm bit when this event occurs. • 2 - FltCoastStop configures the drive to perform a coast stop and set the appropriate fault bit, in response to this event. • 3 - Flt RampStop configures the drive to perform a ramp stop and set the appropriate fault bit, in response to this event. • 4 - FltCurLimStp configures the drive to perform a current-limit stop and set the appropriate fault bit, in response to this event.	Default Options:	1 = "Alarm" 0 = "Ignore" 1 = "Alarm" 2 = "FltCoastStop" 3 = "Flt RampStop" 4 = "FltCurLimStp"			
377	**Inv OL Trip Cnfg** Enter a value to configure the drive's response to an Inverter Overload (OL) Trip exception event. This event is triggered when one of the Inverter Protection Current-Over-Time functions (Open Loop or Closed Loop) detects current and temperature at a fault level. • 0 - Ignore configures the drive to continue running, as normal, when this event occurs. • 1 - Alarm configures the drive to continue running and set the appropriate alarm bit when this event occurs. • 2 - FltCoastStop configures the drive to perform a coast stop and set the appropriate fault bit, in response to this event.	Default: Options:	1 = "Alarm" 0 = "Ignore" 1 = "Alarm" 2 = "FltCoastStop"			
378	**Interp Flt Cnfg** Enter a value to configure the drive's response to a position interpolator exception event. If the interpolator loses the synchronization pulse or is out of synch, this event occurs.	Default: Options:	1 = "Alarm" 0 = "Ignore" 1 = "Alarm" 2 = "FltCoastStop" 3 = "Flt RampStop" 4 = "FltCurLimStp"			
379	**Ext Flt/Alm Cnfg** Enter a value to configure the drive's response to an External Input exception event. The event is triggered by a digital input that is configured for auxiliary fault or auxiliary aux fault by selecting 3 "Ext Fault" or 38 "ExtFault Inv" in Par 825 [DigIn 1 Sel], Par 826 [DigIn 2 Sel] or Par 827 [DigIn 3 Sel]. • 0 - Ignore configures the drive to continue running, as normal, when this event occurs. • 1 - Alarm configures the drive to continue running and set the appropriate alarm bit when this event occurs. • 2 - FltCoastStop configures the drive to perform a coast stop and set the appropriate fault bit, in response to this event. • 3 - Flt RampStop configures the drive to perform a ramp stop and set the appropriate fault bit, in response to this event. • 4 - FltCurLimStp configures the drive to perform a current-limit stop and set the appropriate fault bit, in response to this event.	Default Options:	2 = "FltCoastStop" 0 = "Ignore" 1 = "Alarm" 2 = "FltCoastStop" 3 = "Flt RampStop" 4 = "FltCurLimStp"			
381	**PreChrg Err Cnfg** Enter a value to configure the drive's response to a Precharge Error exception event. • 0 - Ignore configures the drive to continue running, as normal, when this event occurs. • 1 - Alarm configures the drive to continue running and set the appropriate alarm bit when this event occurs. • 2 - FltCoastStop configures the drive to perform a coast stop and set the appropriate fault bit, in response to this event	Default: Options:	2 = "Alarm" 0 = "Ignore" 1 = "Alarm" 2 = "FltCoastStop"			
382	**MC Cmd Lim Cnfg** Enter a value to configure the drive's response to a Motor-Controller (MC) Command Limitation exception event. This event is triggered when the motor-controller detects limit of the command values used in the motor-controller, and returns the exception event to the Velocity Position Loop (VPL). • 0 - Ignore configures the drive to continue running, as normal, when this event occurs. • 1 - Alarm configures the drive to continue running and set the appropriate alarm bit when this event occurs. • 2 - FltCoastStop configures the drive to perform a coast stop and set the appropriate fault bit, in response to this event.	Default: Options:	2 = "Alarm" 0 = "Ignore" 1 = "Alarm" 2 = "FltCoastStop"			

No.	Name Description	Values		Linkable	Read-Write	Data Type
383	**SL CommLoss Data** Enter a value to determine what is done with the data received from SynchLink when a communication loss occurs. Refer to Par 902 [SL Error Status] for possible causes of communication loss. • 0 - Zero Data Resets data to zero. • 1 - Last State Holds data in its last state.	Default: Options:	1 = "Last State" 0 = "Zero Data" 1 = "Last State"			

ATTENTION: Risk of injury or equipment damage exists. Par 383 [SL CommLoss Data] lets you determine the action of the drive if communications are disrupted. By default this parameter causes the drive to hold the data in its last state. You can set this parameter so that the drive resets the data to zero. Precautions should be taken to ensure that the setting of this parameter does not create hazards of injury or equipment damage.

384	**SL CommLoss Cnfg** Enter a value to configures the drive's response to SynchLink communication loss. • 0 - Ignore configures the drive to continue running, as normal, when this event occurs. • 1 - Alarm configures the drive to continue running and set the appropriate alarm bit when this event occurs. • 2 - FltCoastStop configures the drive to perform a coast stop and set the appropriate fault bit, in response to this event. • 3 - Flt RampStop configures the drive to perform a ramp stop and set the appropriate fault bit, in response to this event. • 4 - FltCurLimStp configures the drive to perform a current-limit stop and set the appropriate fault bit, in response to this event.	Default Options:	2 = "FltCoastStop" 0 = "Ignore" 1 = "Alarm" 2 = "FltCoastStop" 3 = "Flt RampStop" 4 = "FltCurLimStp"			

ATTENTION: Risk of injury or equipment damage exists. Par 384 [SL CommLoss Cnfg] lets you determine the action of the drive if communications are disrupted. By default this parameter causes the drive fault and coast to a stop. You can set this parameter so that the drive continues to run. Precautions should be taken to ensure that the setting of this parameter does not create hazards of injury or equipment damage.

385	**Lgx CommLossData** Enter a value to configure what the drive does with the data received from the DriveLogix controller when the connection is closed or times out. • 0 - Zero Data Resets data to zero. • 1 - Last State Holds data in its last state.	Default: Options:	1 = "Last State" 0 = "Zero Data" 1 = "Last State"			

ATTENTION: Risk of injury or equipment damage exists. Par 385 [Lgx CommLossData] lets you determine the action of the drive if communications are disrupted. By default this parameter causes the drive to hold the data in its last state. You can set this parameter so that the drive resets the data to zero. Precautions should be taken to ensure that the setting of this parameter does not create hazards of injury or equipment damage.

386	**Lgx OutOfRunCnfg** Enter a value to configure the drive's response to the DriveLogix processor being in a "Non-Run" mode. Non-Run modes include Program, Remote-Program and Faulted. • 0 - Ignore configures the drive to continue running, as normal, when this event occurs. • 1 - Alarm configures the drive to continue running and set the appropriate alarm bit when this event occurs. • 2 - FltCoastStop configures the drive to perform a coast stop and set the appropriate fault bit, in response to this event. • 3 - Flt RampStop configures the drive to perform a ramp stop and set the appropriate fault bit, in response to this event. • 4 - FltCurLimStp configures the drive to perform a current-limit stop and set the appropriate fault bit, in response to this event.	Default Options:	2 = "FltCoastStop" 0 = "Ignore" 1 = "Alarm" 2 = "FltCoastStop" 3 = "Flt RampStop" 4 = "FltCurLimStp"			

ATTENTION: Risk of injury or equipment damage exists. Par 386 [Lgx OutOfRunCnfg] lets you determine the action of the drive if communications are disrupted. By default this parameter causes the drive fault and coast to a stop. You can set this parameter so that the drive continues to run. Precautions should be taken to ensure that the setting of this parameter does not create hazards of injury or equipment damage.

No.	Name Description	Values		Linkable	Read-Write	Data Type
387	**Lgx Timeout Cnfg** Enter a value to configure the drive's response to a "Controller-to-Drive" connection timeout, as detected by the drive. • 0 - Ignore configures the drive to continue running, as normal, when this event occurs. • 1 - Alarm configures the drive to continue running and set the appropriate alarm bit when this event occurs. • 2 - FltCoastStop configures the drive to perform a coast stop and set the appropriate fault bit, in response to this event. • 3 - Flt RampStop configures the drive to perform a ramp stop and set the appropriate fault bit, in response to this event. • 4 - FltCurLimStp configures the drive to perform a current-limit stop and set the appropriate fault bit, in response to this event.	Default Options:	2 = "FltCoastStop" 0 = "Ignore" 1 = "Alarm" 2 = "FltCoastStop" 3 = "Flt RampStop" 4 = "FltCurLimStp"			

ATTENTION: Risk of injury or equipment damage exists. Par 387 [Lgx Timeout Cnfg] lets you determine the action of the drive if communications are disrupted. By default this parameter causes the drive fault and coast to a stop. You can set this parameter so that the drive continues to run. Precautions should be taken to ensure that the setting of this parameter does not create hazards of injury or equipment damage.

388	**Lgx Closed Cnfg** Enter a value to configure the drive's response to the controller closing the "Controller-to-Drive" connection. • 0 - Ignore configures the drive to continue running, as normal, when this event occurs. • 1 - Alarm configures the drive to continue running and set the appropriate alarm bit when this event occurs. • 2 - FltCoastStop configures the drive to perform a coast stop and set the appropriate fault bit, in response to this event. • 3 - Flt RampStop configures the drive to perform a ramp stop and set the appropriate fault bit, in response to this event. • 4 - FltCurLimStp configures the drive to perform a current-limit stop and set the appropriate fault bit, in response to this event.	Default Options:	2 = "FltCoastStop" 0 = "Ignore" 1 = "Alarm" 2 = "FltCoastStop" 3 = "Flt RampStop" 4 = "FltCurLimStp"			

ATTENTION: Risk of injury or equipment damage exists. Par 388 [Lgx Closed Cnfg] lets you determine the action of the drive if communications are disrupted. By default this parameter causes the drive fault and coast to a stop. You can set this parameter so that the drive continues to run. Precautions should be taken to ensure that the setting of this parameter does not create hazards of injury or equipment damage.

389	**Lgx LinkChngCnfg** Enter a value to configure the drive's response to "Controller-to-Drive" default links being removed. A default link is a link automatically set up when a communication format is selected for the Controller to Drive connection. • 0 - Ignore configures the drive to continue running, as normal, when this event occurs. • 1 - Alarm configures the drive to continue running and set the appropriate alarm bit when this event occurs. • 2 - FltCoastStop configures the drive to perform a coast stop and set the appropriate fault bit, in response to this event. • 3 - Flt RampStop configures the drive to perform a ramp stop and set the appropriate fault bit, in response to this event. • 4 - FltCurLimStp configures the drive to perform a current-limit stop and set the appropriate fault bit, in response to this event.	Default Options:	2 = "FltCoastStop" 0 = "Ignore" 1 = "Alarm" 2 = "FltCoastStop" 3 = "Flt RampStop" 4 = "FltCurLimStp"			

ATTENTION: Risk of injury or equipment damage exists. Par 389 [Lgx LinkChngCnfg] lets you determine the action of the drive if communications are disrupted. By default this parameter causes the drive fault and coast to a stop. You can set this parameter so that the drive continues to run. Precautions should be taken to ensure that the setting of this parameter does not create hazards of injury or equipment damage.

No.	Name Description	Values		Linkable	Read-Write	Data Type
390	**SL MultErr Cnfg** Enter a value to configure the Drive Module's response to a SynchLink Multiplier error. Refer to Par 927 [SL Mult State] for possible causes for multiplier errors. • 0 - Ignore configures the drive to continue running, as normal, when this event occurs. • 1 - Alarm configures the drive to continue running and set the appropriate alarm bit when this event occurs. • 2 - FltCoastStop configures the drive to perform a coast stop and set the appropriate fault bit, in response to this event. • 3 - Flt RampStop configures the drive to perform a ramp stop and set the appropriate fault bit, in response to this event. • 4 - FltCurLimStp configures the drive to perform a current-limit stop and set the appropriate fault bit, in response to this event.	Default Options:	2 = "FltCoastStop" 0 = "Ignore" 1 = "Alarm" 2 = "FltCoastStop" 3 = "Flt RampStop" 4 = "FltCurLimStp"			

ATTENTION: Risk of injury or equipment damage exists. Par 390 [SL MultErr Cnfg] lets you determine the action of the drive if communications are disrupted. By default this parameter causes the drive fault and coast to a stop. You can set this parameter so that the drive continues to run. Precautions should be taken to ensure that the setting of this parameter does not create hazards of injury or equipment damage.

391	**DPI CommLoss Cfg** Enter a value to configure the drive's response to the failure of a DPI port. • 0 - Ignore configures the drive to continue running, as normal, when this event occurs. • 1 - Alarm configures the drive to continue running and set the appropriate alarm bit when this event occurs. • 2 - FltCoastStop configures the drive to perform a coast stop and set the appropriate fault bit, in response to this event. • 3 - Flt RampStop configures the drive to perform a ramp stop and set the appropriate fault bit, in response to this event. • 4 - FltCurLimStp configures the drive to perform a current-limit stop and set the appropriate fault bit, in response to this event.	Default Options:	2 = "FltCoastStop" 0 = "Ignore" 1 = "Alarm" 2 = "FltCoastStop" 3 = "Flt RampStop" 4 = "FltCurLimStp"			

ATTENTION: Risk of injury or equipment damage exists. Par 391 [DPI CommLoss Cfg] lets you determine the action of the drive if communications are disrupted. By default this parameter causes the drive fault and coast to a stop. You can set this parameter so that the drive continues to run. Precautions should be taken to ensure that the setting of this parameter does not create hazards of injury or equipment damage.

392	**NetLoss DPI Cnfg** Enter a value to configure the drive's response to a communication fault from a network card at a DPI port. • 0 - Ignore configures the drive to continue running, as normal, when this event occurs. • 1 - Alarm configures the drive to continue running and set the appropriate alarm bit when this event occurs. • 2 - FltCoastStop configures the drive to perform a coast stop and set the appropriate fault bit, in response to this event. • 3 - Flt RampStop configures the drive to perform a ramp stop and set the appropriate fault bit, in response to this event. • 4 - FltCurLimStp configures the drive to perform a current-limit stop and set the appropriate fault bit, in response to this event.	Default Options:	2 = "FltCoastStop" 0 = "Ignore" 1 = "Alarm" 2 = "FltCoastStop" 3 = "Flt RampStop" 4 = "FltCurLimStp"			

ATTENTION: Risk of injury or equipment damage exists. Par 392 [NetLoss DPI Cnfg] lets you determine the action of the drive if communications are disrupted. By default this parameter causes the drive fault and coast to a stop. You can set this parameter so that the drive continues to run. Precautions should be taken to ensure that the setting of this parameter does not create hazards of injury or equipment damage.

393	**BusUndervoltCnfg** Enter a value to configure the drive's response to the DC Bus voltage falling below the minimum value. • 0 - Ignore configures the drive to continue running, as normal, when this event occurs. • 1 - Alarm configures the drive to continue running and set the appropriate alarm bit when this event occurs. • 2 - FltCoastStop configures the drive to perform a coast stop and set the appropriate fault bit, in response to this event. • 3 - Flt RampStop configures the drive to perform a ramp stop and set the appropriate fault bit, in response to this event. • 4 - FltCurLimStp configures the drive to perform a current-limit stop and set the appropriate fault bit, in response to this event.	Default Options:	1 = "Alarm" 0 = "Ignore" 1 = "Alarm" 2 = "FltCoastStop" 3 = "Flt RampStop" 4 = "FltCurLimStp"			
394	**VoltFdbkLossCnfg** Enter a value to configure the drive's response to a communication error between Motor Control (MC) and the motor voltage feedback board. • 0 - Ignore configures the drive to continue running, as normal, when this event occurs. • 1 - Alarm configures the drive to continue running and set the appropriate alarm bit when this event occurs. • 2 - FltCoastStop configures the drive to perform a coast stop and set the appropriate fault bit, in response to this event.	Default: Options:	2 = "FltCoastStop" 0 = "Ignore" 1 = "Alarm" 2 = "FltCoastStop"			

No.	Name Description	Values		Linkable	Read-Write	Data Type
395	**+Sft OvrTrvlCnfg** Enter a value to configure the drive's response to a positive software positioning over travel condition. • 0 - Ignore configures the drive to continue running, as normal, when this event occurs. • 1 - Alarm configures the drive to continue running and set the appropriate alarm bit when this event occurs. • 2 - FltCoastStop configures the drive to perform a coast stop and set the appropriate fault bit, in response to this event. • 3 - Flt RampStop configures the drive to perform a ramp stop and set the appropriate fault bit, in response to this event. • 4 - FltCurLimStp configures the drive to perform a current-limit stop and set the appropriate fault bit, in response to this event.	Default Options:	1 = "Alarm" 0 = "Ignore" 1 = "Alarm" 2 = "FltCoastStop" 3 = "Flt RampStop" 4 = "FltCurLimStp"			
396	**-Sft OvrTrvlCnfg** Enter a value to configure the drive's response to a negative software positioning over travel condition. • 0 - Ignore configures the drive to continue running, as normal, when this event occurs. • 1 - Alarm configures the drive to continue running and set the appropriate alarm bit when this event occurs. • 2 - FltCoastStop configures the drive to perform a coast stop and set the appropriate fault bit, in response to this event. • 3 - Flt RampStop configures the drive to perform a ramp stop and set the appropriate fault bit, in response to this event. • 4 - FltCurLimStop configures the drive to perform a current-limit stop and set the appropriate fault bit, in response to this event.	Default Options:	1 = "Alarm" 0 = "Ignore" 1 = "Alarm" 2 = "FltCoastStop" 3 = "Flt RampStop" 4 = "FltCurLimStp"			
397	**+Hrd OvrTrvlCnfg** Enter a value to configure the drive's response to a positive hardware positioning over travel condition. • 0 - Ignore configures the drive to continue running, as normal, when this event occurs. • 1 - Alarm configures the drive to continue running and set the appropriate alarm bit when this event occurs. • 2 - FltCoastStop configures the drive to perform a coast stop and set the appropriate fault bit, in response to this event. • 3 - Flt RampStop configures the drive to perform a ramp stop and set the appropriate fault bit, in response to this event. • 4 - FltCurLimStp configures the drive to perform a current-limit stop and set the appropriate fault bit, in response to this event.	Default Options:	1 = "Alarm" 0 = "Ignore" 1 = "Alarm" 2 = "FltCoastStop" 3 = "Flt RampStop" 4 = "FltCurLimStp"			
398	**-Hrd OvrTrvlCnfg** Enter a value to configure the drive's response to a negative hardware positioning over travel condition. • 0 - Ignore configures the drive to continue running, as normal, when this event occurs. • 1 - Alarm configures the drive to continue running and set the appropriate alarm bit when this event occurs. • 2 - FltCoastStop configures the drive to perform a coast stop and set the appropriate fault bit, in response to this event. • 3 - Flt RampStop configures the drive to perform a ramp stop and set the appropriate fault bit, in response to this event. • 4 - FltCurLimStp configures the drive to perform a current-limit stop and set the appropriate fault bit, in response to this event.	Default Options:	1 = "Alarm" 0 = "Ignore" 1 = "Alarm" 2 = "FltCoastStop" 3 = "Flt RampStop" 4 = "FltCurLimStp"			
399	**Position ErrCnfg** Enter a value to configure the drive's response to a position error condition. • 0 - Ignore configures the drive to continue running, as normal, when this event occurs. • 1 - Alarm configures the drive to continue running and set the appropriate alarm bit when this event occurs. • 2 - FltCoastStop configures the drive to perform a coast stop and set the appropriate fault bit, in response to this event. • 3 - Flt RampStop configures the drive to perform a ramp stop and set the appropriate fault bit, in response to this event. • 4 - FltCurLimStp configures the drive to perform a current-limit stop and set the appropriate fault bit, in response to this event.	Default Options:	1 = "Alarm" 0 = "Ignore" 1 = "Alarm" 2 = "FltCoastStop" 3 = "Flt RampStop" 4 = "FltCurLimStp"			
400	**Rated Amps** Current rating of the inverter. The drive automatically sets this at power up. Notes: The maximum value was changed for firmware version 2.003. The maximum value was changed from 2500.0000 to 3000.0000 for firmware version 4.002.	Default: Min/Max: Units:	22.0000 0.1000/3000.0000 A		RO	Real
401	**Rated Volts** Nameplate voltage rating of the inverter. The drive automatically sets this at power up.	Default: Min/Max: Units:	480 75/750 V		RO	16-bit Integer
402	**PWM Frequency** Carrier frequency for the PWM output of the drive. Drive derating may occur at higher carrier frequencies. For derating information, refer to the PowerFlex Reference Manual. Default is dependant on power structure of the drive. Note: This parameter was changed for firmware version 3.004 to not allow changes while the drive is running.	Default: Min/Max: Units:	2.0000 (Fr 5, 6, 9 & Up) 4.0000 (Fr 1-4) 1.0000/15.0000 (10.0000 Fr 5, 6, 9 & Up) kHz		RW	Real
403	**Voltage Class** Sets the drive configuration for high or low voltage class (for example, 400. . . 480V AC drive). Allows choice of configuration and affects many drive parameters including drive rated current, voltage, power, over loads and maximum PWM carrier frequency. Note: This parameter was changed for firmware version 3.004 to allow the drive to produce an output voltage limited by Par 531 [Maximum Voltage] (or maximum voltage defined by the DC bus voltage level, Par 306 [DC Bus Voltage], and DC bus voltage utilization limit, Par 500 [Bus Util Limit]).	Default: Options:	3 = "High Voltage" 2 = "Low Voltage" 3 = "High Voltage"			
404	**Dead Time** The time delay between turning off and turning on an upper device and a lower device in the power structure. This parameter is set at power up and is not user adjustable.	Default: Min/Max: Units:	5.0000 2.0000/100.0000 µs		RO	Real

No.	Name Description	Values		Linkable	Read-Write	Data Type
405	**Dead Time Comp** The amount of voltage correction used to compensate for the loss of voltage during dead time. Do not adjust. Contact factory for alternative settings.	Default: Min/Max: Units:	0 0/200 %		RW	16-bit Integer
406	**Power Loss Mode** Enter a value to configure the drive's response to a loss of input power, as sensed by an input voltage below the value specified in Par 408 [Power Loss Level]. • Enter a value of "0" to make the drive fault and coast to a stop (supply no current to the motor) after the amount of time specified in Par 407 [Power Loss Time] has expired. • Enter a value of "2" to make the drive fault and continue "normal" operation after the amount of time specified in Par 407 [Power Loss Time] has expired. • Enter a value of "5" to make the drive provide only motor flux current during the power loss time.	Default: Options:	0 = "Coast" 0 = "Coast" 1 = "Reserved" 2 = "Continue" 3 = "Reserved" 4 = "Reserved" 5 = "Flux Only"			
407	**Power Loss Time** Sets the amount of time that the drive will remain in a ride through condition before a fault is detected.	Default: Min/Max: Units:	2.0000 0.0000/60.0000 s		RW	Real
408	**Power Loss Level** Sets the drop in percentage of the bus voltage at which ride-through begins and modulation ends. When the bus voltage falls below this level and Par 406 [Power Loss Mode] is set to 0 "Coast" or 5 "Flux Only", an alarm (F92 "Ride Thru") will be displayed on the HIM and the drive prepares for an automatic restart. Enter a percentage of the bus voltage derived from the high voltage setting for the voltage class. For example: On a 400-480V drive, $0.221 \times 480 Vac \times \sqrt{2} = 150 Vdc$ Note: The definition was updated to include the bit settings for parameter 406 for firmware version 4.002.	Default: Min/Max: Units: Scale:	22.1 15/95 % 0		RW	16-bit Integer
409	**Line Undervolts** Controls the level of bus voltage that is needed to complete precharge and sets the level for undervoltage alarm/fault detection. Enter a percentage of the bus voltage derived from the value in Par 401 [Rated Volts]. For example: on a 480V drive, $0.615 \times 480 Vac \times \sqrt{2} = 418 Vdc$	Default: Min/Max: Units:	61.5000 10.0000/90.0000 %		RW	Real
410	**PreChrg TimeOut** Sets the time duration of precharge. If bus voltage does not stabilize within this amount of time, a Precharge Error exception event occurs.	Default: Min/Max: Units:	30.0000 10.0000/180.0000 s		RW	Real
411	**PreChrg Control** Must equal 1 to allow drive to exit precharge and begin to run. Link this parameter to a controller output word to coordinate the precharge of multiple drives.	Default: Options:	1 = "Enbl PrChrg" 0 = "Hold PrChrg" 1 = "Enbl PrChrg"			

No.	Name Description	Values	Linkable	Read-Write	Data Type
412	**Power EE TP Sel** Enter or write a value to select drive power EEPROM data displayed in Par 413 [Power EE TP Data]. The default is 0 "Zero". Note: Options 74 - 92 were changed and options 93 - 111 were added for firmware version 3.001. **Options:**				
413	**Power EE TP Data** Displays the data selected by Par 412 [Power EE TP Sel].	Default: 0 Min/Max: -/+2200000000		RO	Real
414	**Brake/Bus Cnfg** Configures the brake and bus operation of the drive. • Set bit 0 "Brake Enable" to enable the operation of the internal brake transistor. • Set bit 1 "Brake Extern" to configure the brake to use an external resistor. • Set bit 2 "Bus Ref High" to select the "high" voltage setting as the turn-on point for the Bus Voltage Regulator. With the "high" setting brake operation starts when bus voltage reaches the value of Par 415 [BusReg/Brake Ref], and Bus Voltage Regulator operation starts when bus voltage reaches the value of Par 415 [BusReg/Brake Ref] plus 4.5%. With the "low" setting, the bus regulator turns on first at the value set by Par 415 [BusReg/Brake Ref] and then the dynamic braking turns on when there are any transients above the value set in Par 415 [BusReg/Brake Ref]. • Set bit 3 "Bus Reg En" to enable the Bus Voltage Regulator. The output of the Bus Voltage Regulator is summed with Par 128 [Regen Power Lim] and fed into the Power Limit Calculator. It, in effect, reduces regenerative torque references when the bus voltage is too high. Notes: This parameter was changed to non-linkable and bits 5 and 6 were added for future use - not active for use with firmware version 3.001. Remove bits 5 and 6 for firmware version 4.001 - not used.				
415	**BusReg/Brake Ref** Sets the "turn-on" voltage for the bus regulator and brakes. Enter a percentage of the high voltage setting for the voltage class. For example, on a 400…480V AC drive, $111 \times \sqrt{2} \times 480 = VDC$ Note: The minimum value for frame 5 and up, 600V AC input drives was changed from 110.5000 to 100.0000 for firmware version 4.002. (1) The minimum value is 100.0000 for frame 5 and up, 600V AC input drives.	Default: 111.0000 Min/Max: 110.5000(1)/117.8000 Units: %		RW	Real
416	**Brake PulseWatts** Limits the power delivered to the external Dynamic Brake (DB) resistor for one second, without exceeding the rated element temperature. You may change the value of this parameter only if you have selected an external DB resistor (set bit 1 "Brake Extern" of Par 414 [Brake/Bus Cnfg]. If this rating is not available from the resistor vendor, you can approximate it with this equation: Par 416 [Brake PulseWatts] = 75,000 x Weight, where Weight equals the weight of resistor wire element in pounds (not the entire weight of the resistor). Another equation you can use is: Par 416 [Brake PulseWatts] = Time Constant x Brake Watts; where Time Constant equals the amount of time to reach 63% of its rated temperature while the maximum power is applied, and Brake Watts is the peak power rating of the resistor. Note: The maximum value was changed from 1000000.0000 to 1000000000.0000 for firmware version 3.001.	Default: 2000.0000 Min/Max: 1.0000/1000000000.0000 Units: W		RW	Real

412 Options:

0 = Zero	19 = Bus VltScale	38 = IGBT Rated A	61 = Convt Type	80 = HH1 P/B ID	99 = HH2 P/B ID
1 = Volt Class	20 = Sml PS Watts	39 = IGBT V Thres	62 = DC Bus Induc	81 = HH1 S/W ID	100 = HH2 S/W ID
2 = Assy Rev	21 = Sml PS Min V	40 = IGBT Slope R	63 = AC Inp Induc	82 = HH1 P/B Rev	101 = HH2 P/B Rev
3 = ASA S/N	22 = Lrg PS Watts	41 = IGBT Sw Engy	64 = Precharg Res	83 = HH1 S/W Rev	102 = HH2 S/W Rev
4 = Manuf Year	23 = Lrg PS Min V	44 = IGBT CS Tres	65 = PrechThrm Tc	84 = HH1 Extr Data	103 = HH2 ExtrData
5 = Manuf Month	24 = Inv Rated Kw	45 = IGBT CS Tc	66 = Mtr NP Units	85 = HH1 VoltIndx	104 = HH2 VoltIndx
6 = Manuf Day	25 = Inv Rated V	46 = Diode V Thrs	67 = Mtr NP Power	86 = HH1 SizeIndx	105 = HH2 SizeIndx
7 = Tst ProcStat	26 = Inv Rated A	47 = Diode SlopeR	68 = Mtr NP Volts	87 = HH1 Option	106 = HH2 Option
8 = Life PwrCycl	27 = Inv 1min Amp	48 = Diode JC Tr	69 = Mtr NP Amps	88 = HH1 HrdPrdct	107 = HH2 HrdPrdct
9 = Life Pwrup	28 = inv 3sec Amp	49 = Diode JC Tc	70 = Mtr NP Freq	89 = HH1 H/W Mdfy	108 = HH2 H/W Mdfy
10 = Life RunTime	29 = SW OverC Amp	50 = GBT Tjmax	71 = Mtr NP RPM	90 = HH1 1V/Amp	109 = HH2 1V/Amp
11 = Kw Accum	30 = DC Bus Cap	51 = HS Max DegC	72 = Mtr IR Vdrop	91 = HH1 2s/Amp	110 = HH2 2s/Amp
12 = Mw Hrs Accum	31 = Min PWM Khz	52 = DB IGBT Amp	73 = Mtr Id Ref	92 = HH1 Scale	111 = HH2 Scale
13 = Inv High Vlt	32 = Max PWM Khz	53 = DB ohms	74 = HH1 Data Rev	93 = HH2 Data Rev	
14 = Reserved	33 = Dfl PWM Khz	54 = DB E Jo/degC	75 = HH1 Dev Type	94 = HH2 Dev Type	
15 = Fan/Pwr Cntl	34 = PWM Dead us	55 = DB EB C/Watt	76 = HH1 Serial #	95 = HH2 Serial #	
16 = Temp Sensor	35 = Drive Frame	56 = DB B Jo/degC	77 = HH1 Test Date	96 = HH2 TestDate	
17 = Phs AmpScale	36 = IGBTs per Pk	57 = DB BA C/Watt	78 = HH1 Vcn Code	97 = HH2 Vcn Code	
18 = Gnd AmpScale	37 = GBT Rated V	60 = DB Ambt Tmax	79 = HH1 CrsCnclD	98 = HH2 CrsCnclD	

414 Brake/Bus Cnfg

Options	Reserved	Reserved	Reserved	Reserved	Reserved	Reserved	Reserved	Reserved	Reserved	Reserved	Reserved	Reserved	Bus Reg En	Bus Ref High	Brake Extern	Brake Enable
Default	x	x	x	x	x	x	x	x	x	x	x	x	1	1	0	0
Bit	15	14	13	12	11	10	9	8	7	6	5	4	3	2	1	0

0 = False
1 = True

No.	Name Description	Values		Linkable	Read-Write	Data Type
417	**Brake Watts** Sets the continuous rated power reference for the Dynamic Brake (DB). You may change the value of this parameter only if you have selected and external DB resistor (set bit 1 "Brake Extern" of Par 414 [Brake/Bus Cnfg]. Note: The maximum value was changed from 5000.0000 to 500000.0000 for firmware version 3.001.	Default: Min/Max: Units:	100.0000 0.0000/500000.0000 W		RW	Real
418	**Brake TP Sel** Enter or write a value to select the drive brake data displayed in Par 419 [Brake TP Data].	Default: Options:	0 = "Zero" 0 = "Zero" 1 = "Duty Cycle" 2 = "Power Actual" 3 = "Max BodyTemp" 4 = "Max ElemTemp" 5 = "BodyTemp Act" 6 = "ElemTemp Act" 7 = "BTmpTripStat" 8 = "ETmpTripStat" 9 = "Int DB Ohms" 10 = "Data State" 11 = "MC BrakeEnbl" 12 = "1/rdb" 13 = "1/th_eb" 14 = "1/ce" 15 = "tamax" 16 = "1/th_ba" 17 = "1/cb" 18 = "DB IGBT Amp"			
419	**Brake TP Data** Displays the data selected by Par 418 [Brake TP Sel].	Default: Min/Max:	0.0000 -/+2200000000.0000		RO	Real
420	**Pwr Strct Mode** Displays the power structure used in the drive. This is an identifier to the firmware for power structure control. • Bit 0 "Lo Pwr Strct" = PowerFlex 700S Frame 1 to 6 • Bit 1 "Hi Pwr Strct" = PowerFlex 700S above Frame 6 • Bit 3 "Parallel Drv" = PowerFlex 700S Frame 12 Note: Bit 3 "Parallel Drv" was added for firmware version 3.001.					

Options	Reserved	Reserved	Reserved	Reserved	Reserved	Reserved	Reserved	Reserved	Reserved	Reserved	Reserved	Reserved	Parallel Drv	PF 700L	Hi Pwr Strct	Lo PwrStrct
Default	x	x	x	x	x	x	x	x	x	x	x	x	0	0	0	0
Bit	15	14	13	12	11	10	9	8	7	6	5	4	3	2	1	0

0 = False
1 = True

421	**Iqs Integ Freq** Sets the break frequency of the torque producing (q-axis) current regulator. This and Par 422 [Iqs Reg P Gain] determine the integral gain for the q-axis current regulator. Set by the autotune procedure. Do not change this value.	Default: Min/Max: Units:	10 0/32767 rad/s		RW	16-bit Integer
422	**Iqs Reg P Gain** Sets the proportional gain of the torque producing (q-axis) current regulator. Set by the autotune procedure. Do not change this value.	Default: Min/Max: Scale:	1.0 0.0/100.0 x 10		RW	16-bit Integer
423	**Iqs Rate Limit** Sets the limit of the rate of change for the torque producing (q-axis) current regulator. Do not change this parameter. Use Par 355 [Iq Rate Limited] to control the q-axis current rate limit.	Default: Min/Max: Units: Scale:	800.0 0.0/800.0 %/ms x 10		RW	16-bit Integer
424	**Flux Ratio Ref** Active only in the Field Oriented Control (FOC) 2 motor control mode (when Par 485 [Motor Ctrl Mode] equals 1 - "FOC 2"). Provides a scaling factor for the flux producing (d-axis) current reference. • When active (Par 511 [FVC2 Mode Config], bit 28 "FlxRatRef Use" is set), Flux Producing (d-axis) Current Reference = Par 488 [Flux Current] x Par 424 [Flux Ratio Ref]. • When inactive (Par 511 [FVC2 Mode Config], bit 28 "FlxRatRef Use" is cleared) Flux Producing (d-axis) Current Reference = Par 488 [Flux Current] below base speed and Flux Producing (d-axis) Current Reference = Par 488 [Flux Current] x motor base speed/motor speed above base speed.	Default: Min/Max: Units: Scale:	99.99 12.50/399.99 % 100 = 32767		RW	16-bit Integer
425	**Flux Rate Limit** Sets the limit for the maximum rate of change for flux producing (d-axis) current.	Default: Min/Max: Units: Scale:	1.0 0.0/195.3 %/ms x 10		RW	16-bit Integer
426	**Flux Satur Coef** This represents the amount of flux current required to compensate for the flux saturation effect of the motor. Active only for FOC 2 motor control mode.	Default: Min/Max: Units: Scale:	0.0 0.0/51.3 % x 10		RW	16-bit Integer
427	**PM Mtr CEMF Comp** Provides CEMF compensation for the torque producing (q-axis) current in the permanent magnet motor mode.	Default: Min/Max: Units:	0 0/100 %		RW	16-bit Integer
428	**IReg IGain Fctr** Adjustment for current regulator integral frequency factor (gain).	Default: Min/Max:	1 1/20		RW	16-bit Integer

No.	Name Description	Values		Linkable	Read-Write	Data Type
429 A	**Ids Integ Freq** Sets the break frequency of the flux producing (d-axis) current regulator. This and Par 430 [Ids Reg P Gain] determine the integral gain for the d-axis current regulator. Set by the autotune procedure. Do not change this value.	Default: Min/Max: Units:	10 0/32767 rad/s		RW	16-bit Integer
430 A	**Ids Reg P Gain** Sets the proportional gain of the flux producing (d-axis) current regulator. Set by the autotune procedure. Do not change this value.	Default: Min/Max: Scale:	1.0 0.0/100.0 x 10		RW	16-bit Integer
431 A	**Test Current Ref** Sets the current reference used for Motor Control (MC) Test Mode.	Units: Default: Min/Max: Scale:	% 50.0 0.0/799.9 x 10		RW	16-bit Integer
432 A	**Test Freq Ref** Sets the frequency reference used for Motor Control (MC) Test Mode. Note: The default value was changed for firmware version 2.003.	Default: Min/Max: Units: Scale:	1.0 -/+799.9 % x 10		RW	16-bit Integer
433 A	**Test Freq Rate** Sets the rate of change of frequency reference used for Motor Control (MC) Test Mode.	Default: Min/Max: Units: Scale:	5.0 0.0/1000.0 %/s x 10		RW	16-bit Integer
434 A	**Mtr Vds Base** Displays the motor flux producing (d-axis) voltage command when running at nameplate motor speed and load. This value is determined during the auto-tune procedure. Do not change this value. Used only in FOC modes.	Default: Min/Max	0 -8192/0		RO	16-bit Integer
435 A	**Mtr Vqs Base** Displays the motor torque producing (q-axis) voltage command when running at nameplate motor speed and load. This value is determined during the auto-tune procedure. Do not change this value. Used only in FOC modes.	Default: Min/Max:	0 0/8192		RO	16-bit Integer
437 A	**Vqs Max** Displays the maximum torque producing (q-axis) voltage allowed on the motor. Adaptation is disabled below this voltage. This value is determined during the auto-tune procedure. Do not change this value. Used only in FOC modes.	Default: Min/Max:	7971 0/32767		RW	16-bit Integer
438 A	**Vds Max** Displays the maximum flux producing (d-axis) voltage allowed on the motor. Adaptation is disabled below this voltage. This value is determined during the auto-tune procedure. Do not change this value. Used only in FOC modes.	Default: Min/Max:	5793 0/32767		RW	16-bit Integer
439 A	**Vqs Min** Displays the minimum torque producing (q-axis) voltage required for motor control adaptation. This value is determined during the auto-tune procedure. Do not change this value. Used only in FOC modes.	Default: Min/Max:	246 -/+32767		RW	16-bit Integer
440 A	**Vds Min** Displays the minimum flux producing (d-axis) voltage required for motor control adaptation. Adaptation is disabled below this voltage. This value is determined during the auto-tune procedure. Do not change this value.	Default: Min/Max:	246 -/+32767		RW	16-bit Integer
441 A	**Vds Fdbk Filt** Displays measured filtered motor flux producing (d-axis) voltage.	Default: Min/Max:	0 -/+32767		RO	16-bit Integer
442 A	**Vqs Fdbk Filt** Displays measured filtered motor torque producing (q-axis) voltage.	Default: Min/Max:	0 -/+32767		RO	16-bit Integer
443 A	**Flux Reg P Gain1** Sets the Proportional (P) gain for the flux regulator. Do not change this value.	Default: Min/Max:	150 0/32767		RW	16-bit Integer
444 A	**Flux Reg I Gain** Sets the Integral (I) gain for the flux regulator. Do not change this value.	Default: Min/Max:	350 0/32767		RW	16-bit Integer
445 A	**Slip Gain Max** Displays the maximum slip frequency allowed in the motor control. The scaling is in hertz x 256. This value is determined during the auto-tune procedure. Do not change this value.	Default: Min/Max: Units:	300 100/10000 %		RW	16-bit Integer
446 A	**Slip Gain Min** Displays the minimum slip frequency allowed in the motor control. The scaling is in hertz x 256. This value is determined during the auto-tune procedure. Do not change this value.	Default: Min/Max: Units:	50 0/100 %		RW	16-bit Integer
447 A	**Slip Reg P Gain** Sets the Proportional (P) gain for the slip regulator. Do not change this value.	Default: Min/Max:	35 0/32767		RW	16-bit Integer
448 A	**Slip Reg I Gain** Sets the Integral (I) gain for the slip regulator. Do not change this value.	Default: Min/Max:	100 0/32767		RW	16-bit Integer

No.	Name Description	Values		Linkable	Read-Write	Data Type
449 A	**SrLss FreqReg Ki** Sets the integral gain of the Frequency Regulator, which estimates motor speed when sensorless feedback is selected. Do not change this value.	Default: Min/Max:	250 0/32767		RW	16-bit Integer
450 A	**SrLss FreqReg Kp** Sets the proportional gain of the Frequency Regulator, which estimates motor speed when sensorless feedback is selected. Do not change this value.	Default: Min/Max:	350 0/32767		RW	16-bit Integer
453 A	**Iu Offset** Sets the current offset correction for the phase U current. This value is set automatically when the drive is not running and Motor Control (MC) is not faulted. Do not change this value.	Default: Min/Max:	0 -/+32767		RW	16-bit Integer
454 A	**Iw Offset** Sets the current offset correction for the flux producing (d-axis) current regulator. This value is set automatically when the drive is not running and Motor Control (MC) is not faulted. Do not change this value.	Default: Min/Max:	0 -/+32767		RW	16-bit Integer
455	**LID Version Num** Indicated firmware version of the LID FPGA.	Default: Min/Max:	24 0/999		RO	16-bit Integer
456	**MC Build Number** Displays the build number of the drive's Motor Control (MC) software.	Default: Min/Max:	0 0/65535		RO	16-bit Integer
457	**MC Firmware Rev** Displays the major and minor revision levels of the drive's Motor Control (MC) software. Changed all values to three decimal places for firmware version 4.001.	Default: Min/Max: Scale:	0.000 0.000/655.350 x 10		RO	16-bit Integer
459	**IdsCompCoeff Mot** Defines the flux producing current (Ids) command compensation coefficient used during motoring. When this parameter is set to 1024 the amount of compensation, which is proportional to torque producing current (Iqs) command, is 100% of the rated flux current at 1 P.U. of Iqs command when the torque producing voltage (Vqs) regulator is off and Par 510 [FVC Mode Config], bit 7 "Ids Comp En" = "1". No Ids command compensation will be applied when Par 510 [FVC Mode Config], bit 7 = "0". Notes: Refer to "Ids Compensation Coefficient Set Up" in the *PowerFlex 700S with Phase II Control Reference Manual*, publication PFLEX-RM003, for more information. This parameter was added for firmware version 4.001.	Default: Min/Max:	0 +/-32767		RW	16-bit Integer
460	**IdsCompCoeff Reg** Defines the flux producing current (Ids) command compensation coefficient used during regeneration. When this parameter is set to 1024 the amount of compensation, which is proportional to torque producing current (Iqs) command, is 100% of the rated flux current at 1 P.U. of Iqs command when the Vqs regulator is off and Par 510 [FVC Mode Config], bit 7 "Ids Comp En" = "1". No Ids command compensation will be applied when Par 510 [FVC Mode Config], bit 7 = "0". Notes: Refer to "Ids Compensation Coefficient Set Up" in the *PowerFlex 700S with Phase II Control Reference Manual*, publication PFLEX-RM003, for more information. This parameter was added for firmware version 4.001.	Default: Min/Max:	0 +/-32767		RW	16-bit Integer
461	**SlipReg Off Iqs** Defines the torque producing current (Iqs) reference level below which the slip regulator turns off, when the slip regulator turn off point is defined as ((Par 461 / 10) + 5) % of the rated Iqs reference. The slip regulator turn on point is defined as ((Par 461 / 10) + 10) % of the rated Iqs reference with the condition of the Vqs regulator is turned on. Note: This parameter was added for firmware version 4.001.	Default: Min/Max:	200 +/-32767		RW	16-bit Integer
462	**VqsReg Off Freq** Defines the output frequency level below which the Vqs regulator turns off, when the Vqs regulator turn off point is defined as (Par 462 / 10) % of the rated motor frequency. The Vqs regulator turn on point is defined as ((Par 462 / 10) + 2) % of the rated motor frequency. Note: This parameter was added for firmware version 4.001.	Default: Min/Max:	150 0/1000		RW	16-bit Integer

463 A

MC Diag Error 1

Displays the first diagnostic error encountered by the Motor Control (MC). Errors appear in this parameter in the order in which they occurred.

Note: Bits 7 & 8 have been changed to "Ground Fault" for firmware version 2.004.

Options	Reserved	Reserved	Reserved	Reserved	Reserved	Reserved	Reserved	Reserved	Reserved	Reserved	Reserved	Reserved	Neg Parametr	Not Rotating	Not Rotating	Reserved	Reserved	WP-VNOn-Wcur	WP-UNOn-U,W	VP-WNOn-Wcur	VP-UNOn-Ucur	UP-WNOn-U,W	UP-VNOn-Ucur	Ground Fault	Ground Fault	UP,VPdevShrt	UP,WPdevShrt	VP,WPdevShrt	UN,VNdevShrt	UN,WNdevShrt	VN,WNdevShrt	Vbus Range
Default	x	x	x	x	x	x	x	x	x	x	x	x	0	0	0	x	x	0	0	0	0	0	0	0	0	0	0	0	0	0	0	0
Bit	31	30	29	28	27	26	25	24	23	22	21	20	19	18	17	16	15	14	13	12	11	10	9	8	7	6	5	4	3	2	1	0

0 = False
1 = True

No.	Name Description	Values	Linkable	Read-Write	Data Type

464 A

MC Diag Error 2

Displays the second diagnostic error encountered by the Motor Control (MC). Errors appear in this parameter in the order in which they occurred.

Options	Reserved	Reserved	Reserved	Reserved	Reserved	Reserved	Reserved	Reserved	Reserved	Reserved	Reserved	Reserved	Reserved	Reserved	Negative Wr	Reserved	Reserved	WP-VNOn-Vvw	WPUN-Vuv,Vvw	VP-WNOn-Vvw	VP-UNOn-Vuv	UPWN-Vuv,Vvw	UP-VNOn-Vuv	Reserved	Reserved	Reserved	Reserved	Reserved	Reserved	Reserved	Reserved	SensOfstRnge
Default	x	x	x	x	x	x	x	x	x	x	x	x	x	x	0	x	x	0	0	0	0	0	0	x	x	x	x	x	x	x	x	0
Bit	31	30	29	28	27	26	25	24	23	22	21	20	19	18	17	16	15	14	13	12	11	10	9	8	7	6	5	4	3	2	1	0

0 = False
1 = True

465 A

MC Diag Error 3

Displays the third diagnostic error encountered by the Motor Control (MC). Errors appear in this parameter in the order in which they occurred.

- Bit 9 "CurrSensor U" - indicates a current sensing fault in the U phase power structure of a frame 12 drive.
- Bit 11 "CurrSensor V" - indicates a current sensing fault in the V phase power structure of a frame 12 drive.
- Bit 13 "CurrSensor W" - indicates a current sensing fault in the W phase power structure of a frame 12 drive.
- Bit 17 "IFlux Range" - indicates that the Flux current is above 90% of the motor rated current.

Note: Bits 1 - 7, 10, 12 and 18 were changed to "Reserved", bits 9, 11, 13 and 17 were changed for firmware version 3.001.

Options	Reserved	Reserved	Reserved	Reserved	Reserved	Reserved	Reserved	Reserved	Reserved	Reserved	Reserved	Reserved	Reserved	Reserved	IFlux Range	Reserved	Reserved	Reserved	CurrSensor W	Reserved	CurrSensor V	Reserved	CurrSensor U	Reserved	Reserved	Reserved	Reserved	Reserved	Reserved	Reserved	Reserved	Reserved
Default	x	x	x	x	x	x	x	x	x	x	x	x	x	x	0	x	x	x	0	x	0	x	0	x	x	x	x	x	x	x	x	x
Bit	31	30	29	28	27	26	25	24	23	22	21	20	19	18	17	16	15	14	13	12	11	10	9	8	7	6	5	4	3	2	1	0

0 = False
1 = True

No.	Name Description	Values	Linkable	Read-Write	Data Type
466 A	**MC TP1 Select** Enter a value to select Motor Control (MC) data displayed in Par 467 [MC TP1 Value] and Par 468 [MC TP1 Bit]. Par 467 [MC TP1 Value] and Par 468 [MC TP1 Bit] are diagnostic tools you can use to view internal drive parameters. The default value is option 0 "MuIqsRef2". Notes: Options 209 - 212 were added for firmware version 2.004. Options 213 - 254 were added for firmware version 3.001. Changed the following selections for firmware 4.001: 84,86, 87, 88, 89, 90, 91, 92, 95, 97, 98, 99, 103, 104, 105, 106, 108, 109, 110, 111, 163, 164, 165, 174, 175, 176, 177, 178, 179, 181, 182, 183. 222, 223, 224, 225, 226, 227, 228, 229, 230, 231, 232, 233, 234, 236, 237, 253. Added option 163 "Flux Up Time" for firmware version 4.002. Options:				

0 = MuIqsRef2	43 = FluxRatio4	86 = SlipGainRate	129 = RWVvOut	172 = VqsComp	215 = CurrSnsChck1
1 = SlipRatio	44 = MuFlxRtioRef	87 = FiltSlipGain	130 = RWVwOut	173 = S4096 2.5V	216 = CurrSnsChck3
2 = Ws	45 = RcpFlxRatio1	88 = SlipScale	131 = RWuErr	174 = FreqAdjustFS	217 = CurrSnsChck5
3 = WrEst2	46 = MuIfluxRef	89 = SlipSclShift	132 = RWvErr	175 = Reserved	218 = FrameSize
4 = We	47 = MuItestRef	90 = VdsError	133 = RWwErr	176 = FreqIntMonFB	219 = Reserved
5 = VdsCmd	48 = MotVntc	91 = MotorRegen	134 = RWVuOut2	177 = MtrCntrlSel	220 = Reserved
6 = VqsCmd	49 = BaseSlip	92 = VqsSlwRtCLim	135 = RWVvOut2	178 = WeMon	221 = Reserved
7 = VuCmd1	50 = VbusFdbk2	93 = MotorVlts	136 = RWVwOut2	179 = BusUtlMtrVlt	222 = PowerMon
8 = VvCmd1	51 = VdsFdbk2	94 = BusUtil	137 = RWPosState	180 = IqsCmd2	223 = RawIwFdbk2
9 = VwCmd1	52 = VqsFdbk2	95 = IdsCompMon	138 = RWNegState	181 = PosErrSum	224 = VqsFbFltrCom
10 = IuFdbk	53 = VdsSpdVltFlt	96 = IqsLimit	139 = BusDropVolts	182 = NegErrSum	225 = VqsErrorComm
11 = IwFdbk	54 = WrEst1	97 = VqsSlwRtCnt	140 = RecoverVolts	183 = Reserved	226 = ReconswFreq
12 = IdsFdbk	55 = MuTestFrqRef	98 = VqsErrMon	141 = DbDuty	184 = VLmtVqsRef	227 = ReconAngleAc
13 = IqsFdbk	56 = TestFrqRef	99 = VqsNoErrCnt	142 = VdsFdbkFltr	185 = VRefVqsRefNm	228 = VsCmdAngleVf
14 = VdsFdbk	57 = FluxFltrN_1	100 = VqsIdsCmd	143 = VqsFdbkFltr	186 = VRefRsIqsNm	229 = ReconFreqInt
15 = VuvFdbk	58 = PrchgDlayCtr	101 = VqsMaxMotor	144 = VbusFdbkFltr	187 = VRefVqsSpdVN	230 = SpeedRef
16 = VvwFdbk	59 = PrchTimOutCr	102 = VqsMaxVbus	145 = VbusMemory	188 = EconoVoltGn	231 = CurFbkIdsFbk
17 = VqsFdbk	60 = PrchPilotCtr	103 = FreqMinFB	146 = VpEnc0VelFbk	189 = F Output Fre	232 = CurFbkIqsFbk
18 = IdsCmd	61 = TrqEnableCtr	104 = FreqMaxFB	147 = VpEnc1VelFbk	190 = TrqCreflqsCm	233 = VqsThetaEst
19 = IqsRatio	62 = MuTscan1	105 = IdsCmdFilter	148 = VPOpt0VelFbk	191 = Snk Wr	234 = VdsThetaEst
20 = MuIqsRef	63 = ErStatFromCp	106 = DelFreqIntFB	149 = VPOpt1VelFbk	192 = SrLssWrAve	235 = RecnSwitch
21 = IqsCmd	64 = FlxCurRteOut	107 = VqsError	150 = BitSelect1	193 = CurFbkIqsFbk	236 = VqsFbTransf
22 = We2	65 = ThetaE	108 = SlipBrkErrFB	151 = BitSelect2	194 = ACRIqsErr	237 = VdsFbTransf
23 = VuTd	66 = SinThetaE1	109 = FastBrkOnFB	152 = SrLssWeEst2	195 = CrefsqIdsCmd	238 = BusLimitVBEr
24 = VvTd	67 = SinThetaE2	110 = FreqOutput	153 = MuIqsRef2	196 = CurFbkIdsFbk	239 = ParDecelRtMC
25 = VwTd	68 = SinThetaE3	111 = AbsFreqOut	154 = EstThetaByMV	197 = VqsCmd700B	240 = ACRIqsRef
26 = VuCmd2	69 = SinThetaE4	112 = TestMark70	155 = ETVdsFbkA	198 = VdsCmc700B	241 = ACRIqsCmd
27 = VvCmd2	70 = SinThetaE5	113 = TestMark71	156 = ETVqsFbkA	199 = VqsRefNom	242 = IqsCmdFltr
28 = VwCmd2	71 = SinThetaE6	114 = TestMark72	157 = ETVdsFbkS	200 = VqsRsIqsNom	243 = ISpdCmd
29 = Kpwm	72 = ThetaEcor	115 = TestMark73	158 = ETVqsFbkS	201 = VqsSpdVltNom	244 = AccDecRate
30 = Vds_cemf	73 = SinThtaEcor1	116 = TestMark74	159 = ETAtanVqVd	202 = VltLmtVqsRef	245 = RecThetaEx4
31 = Vqs_cemf	74 = SinThtaEcor2	117 = TestMark75	160 = ETByMtrVDfr	203 = IdsFbkDeriv	246 = RecVqsFdbk
32 = VdsCmd2	75 = SinThtaEcor3	118 = TestMark76	161 = VelRef2	204 = VdsRefNom	247 = RecVdsFdbk
33 = VqsCmd2	76 = SinThtaEcor4	119 = TestMark76	162 = VelOutput	205 = VdsRsIdsNom	248 = VdeFilter
34 = IdsIntegral	77 = MuIRef2B	120 = TestMark78	163 = Flux Up Time	206 = VdsSpdVltNom	249 = VqsFdbkTrans
35 = IqsIntegral	78 = SpdFdbk	121 = TestMark79	164 = FrameSize	207 = VltLmtVdsRef	250 = VdsFdbkTrans
36 = DcBus	79 = SpdIntegral	122 = TestMark7A	165 = VdTargetMon	208 = IdsFbkDeriv	251 = Excitation
37 = AGnd	80 = SpdPrportnal	123 = TestMark7B	166 = ThetaELiner	209 = VuvFbkOffset	252 = ExciteStatus
38 = Wr2	81 = SpdPI	124 = TestMark7C	167 = PprCntDfcOt	210 = VvwFbkOffset	253 = CommIdsCount
39 = FluxRatio1	82 = SpdRef	125 = TestMark7D	168 = PprCntDfcTh	211 = IuFbkOffset	254 = ThetaEsample
40 = VbusFdbk	83 = SlipGainEst	126 = TestMark7E	169 = LinearPprCnt	212 = IwFbkOffset	255 Reserved
41 = FluxRatio2	84 = LatchSlipGin	127 = TestMark7F	170 = ActiveFdbk	213 = KSlipNP	
42 = FluxRatio3	85 = Ws2	128 = RWVuOut	171 = VdsComp	214 = IUnbalanceSt	

467 A	**MC TP1 Value** Displays the data selected by Par 466 [MC TP1 Select]. This display should only be used if the selected value is integer data. This parameter is a diagnostic tool you can use to view internal drive parameters.	Default: Min/Max:	0 -/+2147483648		RO	32-bit Integer

No.	Name Description	Values		Linkable	Read-Write	Data Type
468 A	**MC TP1 Bit** Displays the data selected by Par 466 [MC TP1 Select]. This display should only be used if the selected value is bit-enumerated data. Par 468 [MC TP1 Bit] is a diagnostic tool you can use to view internal drive parameters.	Default: Min: Max:	00000000000000000000000000000000 00000000000000000000000000000000 11111111111111111111111111111111		RO	32-bit Boolean
469 A	**FVC CEMF Comp** Displays the current regulator feedforward compensation. Do not change this value.	Default: Min/Max: Units:	0 0/100 %		RW	16-bit Integer
470 A	**Flux Reg P Gain2** Displays the additional proportional gain used at the start of Bus voltage limited field weakening. Do not change this value.	Default: Min/Max:	1000 0/32767		RW	16-bit Integer
471 A	**Estimated Torque** Displays the calculated motor shaft torque. Notes: This parameter was added for firmware version 2.003. The Units and Scale information were added for firmware version 4.002.	Default: Min/Max: Units: Scale:	0.0 +/-8.0 P.U. P.U. 1.0 = 100% of the Motor Torque		RO	Real
472	**PreCharge Delay** Adjusts the delay between the time all other precharge conditions have been met and the time the drive leaves the precharge state. Can be used to control the sequence of precharge completion in a drive system. The maximum value of this parameter is calculated as follows: Par 472 [PreCharge Delay] = Par 410 [PreChrg TimeOut] - 1.0 second.	Default: Min/Max: Units:	2.0 0.0/Calculated s		RW	16-bit Integer

No.	Name Description	Values	Linkable	Read-Write	Data Type
473 A	**MC TP2 Select** Enter a value to select Motor Control (MC) data displayed in Par 474 [MC TP2 Value] and Par 468 [MC TP1 Bit]. Par 474 [MC TP2 Value], and Par 468 [MC TP1 Bit] are diagnostic tools you can use to view internal drive parameters. This parameter should not be changed by the user. The default value is option 0 "MuIqsRef2". Note: This parameter was added for firmware version 2.003. Added option 163 "Flux Up Time" for firmware version 4.002. **Options:**				

0 =	MuIqsRef2	43 =	FluxRatio4	86 =	SlipGainRate	129 =	RWVvOut	172 =	VqsComp	215 =	CurrSnsChck1
1 =	SlipRatio	44 =	MuFlxRtioRef	87 =	FiltSlipGain	130 =	RWVwOut	173 =	S4096 2.5V	216 =	CurrSnsChck3
2 =	Ws	45 =	RcpFlxRatio1	88 =	SlipScale	131 =	RWuErr	174 =	FreqAdjustFS	217 =	CurrSnsChck5
3 =	WrEst2	46 =	MuIfluxRef	89 =	SlipSclShift	132 =	RWvErr	175 =	Reserved	218 =	FrameSize
4 =	We	47 =	MuItestRef	90 =	VdsError	133 =	RWwErr	176 =	FreqIntMonFB	219 =	Reserved
5 =	VdsCmd	48 =	MotVntc	91 =	MotorRegen	134 =	RWVuOut2	177 =	MtrCntrlSel	220 =	Reserved
6 =	VqsCmd	49 =	BaseSlip	92 =	VqsSlwRtCLim	135 =	RWVvOut2	178 =	WeMon	221 =	Reserved
7 =	VuCmd1	50 =	VbusFdbk2	93 =	MotorVlts	136 =	RWVwOut2	179 =	Reserved	222 =	PowerMon
8 =	VvCmd1	51 =	VdsFdbk2	94 =	BusUtil	137 =	RWPosState	180 =	IqsCmd2	223 =	RawIwFdbk2
9 =	VwCmd1	52 =	VqsFdbk2	95 =	IdsCompMon	138 =	RWNegState	181 =	Reserved	224 =	VqsFbFltrCom
10 =	IuFdbk	53 =	VdsSpdVltFlt	96 =	IqsLimit	139 =	BusDropVolts	182 =	Reserved	225 =	VqsErrorComm
11 =	IwFdbk	54 =	WrEst1	97 =	VqsSlwRtCnt	140 =	RecoverVolts	183 =	Reserved	226 =	ReconswFreq
12 =	IdsFdbk	55 =	MuTestFrqRef	98 =	VqsErrMon	141 =	DbDuty	184 =	VLmtVqsRef	227 =	ReconAngleAc
13 =	IqsFdbk	56 =	TestFrqRef	99 =	VqsNoErrCnt	142 =	VdsFdbkFltr	185 =	VRefVqsRefNm	228 =	VsCmdAngleVf
14 =	VdsFdbk	57 =	FluxFltrN_1	100 =	VqsIdsCmd	143 =	VqsFdbkFltr	186 =	VRefRsIqsNm	229 =	ReconFreqInt
15 =	VuvFdbk	58 =	PrchgDlayCtr	101 =	VqsMaxMotor	144 =	VbusFdbkFltr	187 =	VRefVqsSpdVN	230 =	SpeedRef
16 =	VvwFdbk	59 =	PrchTimOutCr	102 =	VqsMaxVbus	145 =	VbusMemory	188 =	EconoVoltGn	231 =	CurFbkIdsFbk
17 =	VqsFdbk	60 =	PrchPilotCtr	103 =	FreqMinFB	146 =	VpEnc0VelFbk	189 =	F Output Fre	232 =	CurFbkIqsFbk
18 =	IdsCmd	61 =	TrqEnableCtr	104 =	FreqMaxFB	147 =	VpEnc1VelFbk	190 =	TrqCrefIqsCm	233 =	VqsThetaEst
19 =	IqsRatio	62 =	MuTscan1	105 =	IdsCmdFilter	148 =	VPOpt0VelFbk	191 =	Snk Wr	234 =	VdsThetaEst
20 =	MuIqsRef	63 =	ErStatFromCp	106 =	DelFreqIntFB	149 =	VPOpt1VelFbk	192 =	SrLssWrAve	235 =	RecnSwitch
21 =	IqsCmd	64 =	FlxCurRteOut	107 =	VqsError	150 =	BitSelect1	193 =	CurFbkIqsFbk	236 =	VqsFbTransf
22 =	We2	65 =	ThetaE	108 =	SlipBrkErrFB	151 =	BitSelect2	194 =	ACRIqsErr	237 =	VdsFbTransf
23 =	VuTd	66 =	SinThetaE1	109 =	FastBrkOnFB	152 =	SrLssWeEst2	195 =	CrefsqIdsCmd	238 =	BusLimitVBEr
24 =	VvTd	67 =	SinThetaE2	110 =	FreqOutput	153 =	MuIqsRef2	196 =	CurFbkIdsFbk	239 =	ParDecelRtMC
25 =	VwTd	68 =	SinThetaE3	111 =	AbsFreqOut	154 =	EstThetaByMV	197 =	VqsCmd700B	240 =	ACRIqsRef
26 =	VuCmd2	69 =	SinThetaE4	112 =	TestMark70	155 =	ETVdsFbkA	198 =	VdsCmc700B	241 =	ACRIqsCmd
27 =	VvCmd2	70 =	SinThetaE5	113 =	TestMark71	156 =	ETVqsFbkA	199 =	VqsRefNom	242 =	IqsCmdFltr
28 =	VwCmd2	71 =	SinThetaE6	114 =	TestMark72	157 =	ETVdsFbkS	200 =	VqsRsIqsNom	243 =	ISpdCmd
29 =	Kpwm	72 =	ThetaEcor	115 =	TestMark73	158 =	ETVqsFbkS	201 =	VqsSpdVltNom	244 =	AccDecRate
30 =	Vds_cemf	73 =	SinThtaEcor1	116 =	TestMark74	159 =	ETAtanVqVd	202 =	VltLmtVqsRef	245 =	RecThetaEx4
31 =	Vqs_cemf	74 =	SinThtaEcor2	117 =	TestMark75	160 =	ETByMtrVDfr	203 =	IdsFbkDeriv	246 =	RecVqsFdbk
32 =	VdsCmd2	75 =	SinThtaEcor3	118 =	TestMark76	161 =	VelRef2	204 =	VdsRefNom	247 =	RecVdsFdbk
33 =	VqsCmd2	76 =	SinThtaEcor4	119 =	TestMark76	162 =	VelOutput	205 =	VdsRsIdsNom	248 =	VdeFilter
34 =	IdsIntegral	77 =	MuIRef2B	120 =	TestMark78	163 =	Flux Up Time	206 =	VdsSpdVltNom	249 =	VqsFdbkTrans
35 =	IqsIntegral	78 =	SpdFdbk	121 =	TestMark79	164 =	FrameSize	207 =	VltLmtVdsRef	250 =	VdsFdbkTrans
36 =	DcBus	79 =	SpdIntegral	122 =	TestMark7A	165 =	VdTargetMon	208 =	IdsFbkDeriv	251 =	Excitation
37 =	AGnd	80 =	SpdPrportnal	123 =	TestMark7B	166 =	ThetaELiner	209 =	VuvFbkOffset	252 =	ExciteStatus
38 =	Wr2	81 =	SpdPI	124 =	TestMark7C	167 =	PprCntDfcOt	210 =	VvwFbkOffset	253 =	CommIdsCount
39 =	FluxRatio1	82 =	SpdRef	125 =	TestMark7D	168 =	PprCntDfcTh	211 =	IuFbkOffset	254 =	ThetaEsample
40 =	VbusFdbk	83 =	SlipGainEst	126 =	TestMark7E	169 =	LinearPprCnt	212 =	IwFbkOffset	255	Reserved
41 =	FluxRatio2	84 =	LatchSlipGin	127 =	TestMark7F	170 =	ActiveFdbk	213 =	KSlipNP		
42 =	FluxRatio3	85 =	Ws2	128 =	RWVuOut	171 =	VdsComp	214 =	IUnbalanceSt		

474 A	**MC TP2 Value** Displays the data selected by Par 473 [MC TP2 Select]. This display should only be used if the selected value is integer data. This parameter is a diagnostic tool you can use to view internal drive parameters. This parameter should not be changed by the user. Note: This parameter was added for firmware version 2.003.	Default: Min/Max:	0.0 +/- 2147483648		RO	32-bit Integer

No.	Name Description	Values	Linkable	Read-Write	Data Type
475 A	**MC FaultTPSelect** Enter or write a value to select the Motor Control (MC) Fault Data displayed in Par 476 [MC FaultTP Value]. This parameter should not be changed by the user. Notes: This parameter was added for firmware version 2.003. The value for option 67 was changed from "HH GateShort" to "MCStatus1" for firmware version 2.004. Values 68 - 76 were added for firmware version 3.001. **Options:** 0 = IqsRef2 1 = Ws 2 = We 3 = We2 4 = VdsCmd 5 = VqsCmd 6 = VdsFdbk 7 = VqsFdbk 8 = IuFdbk 9 = IwFdbk 10 = IdsFdbk 11 = IqsFdbk 12 = IdsCmd 13 = IqsCmd 14 = DcBus 15 = VbusFdbk 16 = VbusFdbkFltr 17 = VbusMemory 18 = Kpwm 19 = ThetaE 20 = FldWeakActiv 21 = MtrFlxPU 23 = SlipGainFltr 24 = SlipVdsCmd 25 = MotorVolts 26 = BusUtil 27 = IqsLimit 28 = VqsIdsCmd 29 = DbDuty 30 = VelFdbkEnc0 31 = VelFdbkEnc1 32 = VdsCmd2 33 = VelFdbkOpt1 34 = Reserved 35 = Reserved 36 = Reserved 37 = Reserved 38 = TorqueEst 39 = TorqueEstFlt 40 = Reserved 41 = PowerCalc 42 = TorqueCmd 43 = RotorFluxEst 44 = Ws2 45 = BusDropVolts 46 = RecoverVolts 47 = TestDtoA0 48 = TestDtoA1 49 = TestDtoA2 50 = TestDtoA3 51 = RideThruActv 52 = PreChrgReqVp 53 = Reserved 54 = Reserved 55 = Reserved 56 = TorqTrimActv 57 = VbusDrop 58 = VdsMax 59 = VbusLow 60 = VbusRising 61 = PreChrgDone 62 = FieldWeak 63 = Reserved 64 = DynamBrakeOn 65 = Reserved 66 = MCStatusMon 67 = MCStatus1 68 = HH OverCurr 69 = HH BusOvrVlt 70 = HH Tr Desat 71 = HH OverLoad 72 = HH Precharge 73 = HH Fan Alarm 74 = HH BusComm 75 = HH HW Incomp 76 = HH GateShort			
476 A	**MC FaultTP Value** Displays the data selected by Par 475 [MC FaultTPSelect]. This parameter should not be changed by the user. Note: This parameter was added for firmware version 2.003.	Default: 0.0 Min/Max: +/- 2147483648		RO	32-bit Integer
477 A	**Est Theta Delay** Active only in Permanent Magnet motor mode (when Par 485 [Motor Ctrl Mode] equals 2 – "PMag Motor"). Provides a delay for the function that compares the estimated rotor position and the data from the position sensor.	Units: ms Default: 10 Min/Max: 2/1024		RW	16-bit Integer
478 A	**VPL Mem Password** VPL memory password. Note: This parameter was added for firmware version 2.003.	Default: 0 Min/Max: +/-2147483648		RW	32-bit Integer
479 A	**VPL Mem Address** VPL memory address. Note: This parameter was added for firmware version 2.003.	Default: 0 Min/Max: 0 - 4294967295		RW	32-bit Integer
480 A	**VPL Mem Data Int** VPL memory data integer. Note: This parameter was added for firmware version 2.003.	Default: 32 Min/Max: +/-2147483648		RW	32-bit Integer
481 A	**VPL Mem Data Flt** VPL memory data filter. Note: This parameter was added for firmware version 2.003.	Default: 1.25 Min/Max:		RW	Real
482 A	**VPL Mem Data Bit** VPL memory data bit. Note: This parameter was added for firmware version 2.003.	Default: 1.25 Min/Max:		RW	32-bit Integer
483 A	**VPL Mem Link Int** VPL memory link integer. Note: This parameter was added for firmware version 2.003.	Default: Min/Max: +/-2147483648		RO	32-bit Integer
484 A	**VPL Mem Link Flt** VPL memory link filter. Note: This parameter was added for firmware version 2.003.	Default: 1.25000 Min/Max:		RO	Real
485	**Motor Ctrl Mode** Enter a value to select the operating mode for the Motor Control (MC). • Value 0 - Field Oriented Control (FOC) is induction motor control with voltage adaptation. • Value 1 - Field Oriented Control 2 (FOC 2) is induction motor control with temperature adaptation. (This option is used only for motors manufactured by Reliance Electric - Japan.) • Value 2 - Permanent Magnet Motor Control (Pmag Motor) is permanent magnet motor operation. • Value 3 - V/Hz is volts per hertz motor control. • Value 4 - Test is the test mode.	Default: 0 = "FOC" Options: 0 = "FOC" 1 = "FOC 2" 2 = "PMag Motor" 3 = "V/Hz" 4 = "Test"			
486 A	**Rated Slip Freq** Displays the control slip frequency, determined from Par 3 [Motor NP Hertz] and Par 4 [Motor NP RPM]. Measured and updated by the autotune procedure. Do not change this value. Note: Changed the attributes to allow changing this parameter while the drive is running for firmware version 3.001.	Default: 0.470 Min/Max: 0.000/32.000 Units: Hz Scale: x 1000		RW	16-bit Integer

No.	Name Description	Values		Linkable	Read-Write	Data Type
487	**Motor NTC Coef** Defines a coefficient used to calculate the rotor temperature from the measured stator temperature. Used only in Field Oriented Control - 2 (FOC2) mode. See Par Par 485 [Motor Ctrl Mode].	Default: Min/Max: Units:	100 50/200 %		RW	16-bit Integer
488	**Flux Current** Specifies the magnetizing current that produces rated flux in the motor in a per unit (percent representation). Measured by the auto-tune procedure. Do not change this value.	Default: Min/Max: Units: Scale:	30.00 0.00/75.00 % x 100		RW	16-bit Integer
489	**Flx CurFdbk (Id)** Displays flux producing (d-axis) current feedback.	Default: Min/Max: Units:	0.0000 -/+8.0000 P.U. P.U.		RO	Real
490	**StatorInductance** Displays the sum of the stator and cable inductances of the motor in per unit (percent representation), as determined by the auto-tune procedure. Scaled to percent of rated motor impedance. Do not change this value. Note: the default value was changed from 8192 to 4096 for firmware version 3.001.	Default: Min/Max: Units: Scale:	100.0 0.00/799.99 % 100 = 4096		RW	16-bit Integer
491	**StatorResistance** Displays the sum of the stator and cable resistances of the motor in per unit (percent representation), as determined by the auto-tune procedure. Scaled to percent of rated motor impedance. Do not change this value.	Default: Min/Max: Units: Scale:	1.00 0.00/100.00 % 100 = 8192		RW	16-bit Integer
492	**Leak Inductance** Displays the sum of the motor stator and rotor leak inductance, and motor cable inductances in per unit (percent representation), as determined by the auto-tune procedure. Scaled to percent of rated motor impedance. Do not change this value.	Default: Min/Max: Units: Scale:	20.00 0.00/100.00 % 100 = 8192		RW	16-bit Integer
493	**Leak Indc Satur1** Displays the leakage inductance correction for the first overload level as determined by the autotune procedure.	Default: Min/Max: Units:	100.00 25.00/100.00 %		RW	16-bit Integer
494	**Leak Indc Satur2** Displays the leakage inductance correction for the first overload level as determined by the auto-tune procedure.	Default: Min/Max: Units:	100.00 25.00/100.00 %		RW	16-bit Integer
495	**Iqs Command** Displays the torque producing (q-axis) current command.	Default: Min/Max: Units: Scale:	0.0 -/+800.0 % x 10		RO	16-bit Integer
496	**Ids Command** Displays the flux producing (d-axis) current command.	Default: Min/Max: Units: Scale:	0.0 -/+800.0 % x 10		RO	16-bit Integer
497	**Vqs Command** Displays the command for initiation of voltage on the torque producing axis (q-axis).	Default: Min/Max: Units: Scale:	0 -/+200 % 100 = 8192		RO	16-bit Integer
498	**Vds Command** Displays the command for initiation of voltage on the flux producing axis (d-axis).	Default: Min/Max: Units: Scale:	0 -/+200 % 100 = 8192		RO	16-bit Integer
499	**Trq CurFdbk (Iq)** Displays torque producing (q-axis) current feedback.	Default: Min/Max: Units:	0.0000 -/+8.0000 P.U.		RO	Real
500	**Bus Util Limit** Sets the maximum allowed bus voltage utilization for the Motor Control. Do not change this value. Higher values may result in control instability or over-current faults.	Default: Min/Max: Units: Scale:	90.0 0.0/100.0 % 100 = 8192		RW	16-bit Integer
501	**Torque En Dly** Sets the delay between the time the drive is enabled and the time the Motor Control applies torque.	Default: Min/Max: Units: Scale:	100 0/32767 ms 100 = 8192		RW	16-bit Integer

No.	Name Description	Values		Linkable	Read-Write	Data Type
502	**Rotor Resistance** Displays rotor resistance, as determined by the auto-tune procedure. Scaled to percent of rated motor impedance. Do not change this value.	Default: Min/Max: Units: Scale:	1.00 0.00/100.00 % 100 = 8192		RW	16-bit Integer
503	**Current Reg BW** Sets the bandwidth for the current regulator. Par 402 [PWM Frequency] limits the maximum value. Reducing the value reduces current regulator over-shoot.	Default: Min/Max: Units:	600 100/30000 rad/s		RW	16-bit Integer
504	**PM AbsEncd Offst** Determined by auto-tune procedure.	Default: Min/Max:	0 0/65535		RW	16-bit Integer
505	**PM TestWait Time** Defines the time interval used for the automated measurement of Par 504 [PM AbsEncd Offst] for a Permanent Magnet (PM) motor.	Default: Min/Max: Units:	2000 500/5000 ms		RW	16-bit Integer
506	**PM Test Idc Ramp** Defines the ramp rate of the Flux Producing (d-axis) current reference that is used for the automated measurement of Par 504 [PM AbsEncd Offst] for a Permanent Magnet (PM) motor.	Default: Min/Max: Units: Scale:	0.1 0.0/195.3 %/ms x 10		RW	16-bit Integer
507	**PM Test FreqRamp** Defines the ramp rate of the frequency reference that is used for the automated measurement of Par 504 [PM AbsEncd Offst] for a Permanent Magnet (PM) motor.	Default: Min/Max: Units: Scale:	0.1 0.0/195.3 %/ms x 10		RW	16-bit Integer
508	**PM Test Freq Ref** Defines the frequency reference that is used for the automated measurement of Par 504 [PM AbsEncd Offst] for a Permanent Magnet (PM) motor.	Default: Min/Max: Units: Scale:	10.0 -/+799.9 % x 10		RW	16-bit Integer
509	**PM Test I Ref** Defines the amplitude of the Flux Producing (d-axis) current reference that is used for the automated measurement of Par 504 [PM AbsEncd Offst] for a Permanent Magnet (PM) motor.	Default: Min/Max: Units: Scale:	30.0 0.0/799.9 % x 10		RW	16-bit Integer

No.	Name Description	Values	Linkable	Read-Write	Data Type

510 **FVC Mode Config**

Configures Field Oriented Control (FOC) operation.

- Bit 4 "SlipTuneDone" when set, the value in Par 486 [Rated Slip Freq] is used as the slip gain before the slip regulator becomes active, after power is cycled, or when the drive is reset by the system. When the Slip Tune is completed, this bit will be automatically be set and Par 486 will be updated.
- Bit 7 "Ids Comp En" setting this bit runs the Ids test, to establish the initial flux current level for the motor, and the inertia test (even if already run).
- Bit 12 "SlipRsCompEn" when set, the stator resistance will be compensated based on the output of the slip regulator.
- Bit16 "ManuCurOffst" when set, Par 453 [Iu Offset] is used as the phase U current feedback offset value and Par 454 [Iw Offset] is used as the phase W current feedback offset value. When this bit is not set (default) the phase U and W current feedback offset values are automatically updated when the drive is in a stop condition except during the first 10 seconds of the stop condition.
- Bit17 "ManuVltOffst" when this bit is set, Par 549 [Vuv Fdbk Offset] is used as the UV voltage feedback offset value and Par 550 [Vvw Fdbk Offset] is used as the VW voltage feedback offset value.
- Bit 23 "SyncTrans En" when set (default), the synchronous transfer algorithm using voltage feedback data is active.
- Bit 26 "SlipGnLimAct" when set = 0 (default), set slip regulator output (SlipGain) to latched SlipGain. When set =1, set SlipGain to Max SlipGain when SlipGain is in Max SlipGain limit, or set SlipGain to Min SlipGain when SlipGain is in Min SlipGain limit.

Notes: Bit changes were made for firmware version 2.003. Bits 10 and 11 were added for firmware version 3.001. Changed bit 3 from "Reserved" to "FastFluxDsbl" for firmware version 3.003. Added bits 4, 7, 12, 16, 17, and 23 for firmware version 4.001. Added Bit 26 for firmware version 6.001.

ATTENTION: Do not modify this parameter. Motor/Drive instabilities and damage may result.

Options	Reserved	Reserved	Reserved	Reserved	Reserved	SlipGnLimAct	Reserved	Reserved	SyncTrans En	SrLss RdThru	VltMinorLpEn	SoftAdptGain	Reserved	Reserved	ManuVltOffst	ManuCurOffst	LwSpdRflctWv	Slip Reg En	SlipGain Est	SlipRsCompEn	SlipPrloadEn	SlipSlewRtEn	ReflWaveComp	BusGain Comp	Ids Comp En	Flux Reg Use	Flux Reg En	SlipTuneDone	FastFluxDsbl	Reserved	Reserved	Reserved
Default	x	x	x	x	x	x	x	x	1	0	1	0	x	x	0	0	0	1	1	0	0	0	1	1	0	1	1	0	0	x	x	x
Bit	31	30	29	28	27	26	25	24	23	22	21	20	19	18	17	16	15	14	13	12	11	10	9	8	7	6	5	4	3	2	1	0

0 = False
1 = True

511 **FVC2 Mode Config**

Configures Field Oriented Control - 2 (FOC2) operation.

Notes: Bit changes were made for firmware version 2.003. This parameter was changed to non-linkable for firmware version 3.001.

ATTENTION: Do not modify this parameter. Motor/Drive instabilities and damage may result.

Options	LnfSnsr Dir	LnfSnsr Use	Reserved	FlxRatRf Use	NTC Active	Reserved	Reserved	CEMF We Use	Reserved	Reserved	Reserved	Reserved	Reserved	Reserved	Reserved	Reserved	Reserved	Reserved	Reserved	Reserved	Reserved	Reserved	Reserved	BusGain Comp	Reserved	Reserved	Reserved	Reserved	Reserved	Reserved	Reserved	Reserved
Default	0	0	x	0	1	x	x	0	x	x	x	x	x	x	x	x	x	x	x	x	x	x	x	1	x	x	x	x	x	x	x	x
Bit	31	30	29	28	27	26	25	24	23	22	21	20	19	18	17	16	15	14	13	12	11	10	9	8	7	6	5	4	3	2	1	0

0 = False
1 = True

512 **PMag Mode Config**

Configures Permanent Magnet (PM) operation.

- Bit 0 "PM Cogging" when set, enables torque ripple compensation.
- Bit 9 "ReflWaveComp" when set, Reflected Wave Correction is enabled.

Notes: Bit changes were made for firmware version 2.003. This parameter was changed to non-linkable for firmware version 3.001. Added bit 9 for firmware version 4.001. Bit 0 "PM Cogging" was added for firmware version 5.002.

ATTENTION: Do not modify this parameter. Motor/Drive instabilities and damage may result.

Options	LinrSnsr Dir	LinrSnsr Use	Reserved	FlxRatRf Use	Reserved	Reserved	Reserved	CEMF We Use	Reserved	Reserved	Reserved	Reserved	PMVltRegUse	PMVltRegEn	Reserved	Reserved	Reserved	Reserved	Reserved	Reserved	Reserved	Reserved	ReflWaveComp	BusGain Comp	Reserved	Reserved	Reserved	Reserved	Reserved	Reserved	Reserved	PM Cogging
Default	0	0	x	0	x	x	x	0	x	x	x	x	1	1	x	x	x	x	x	x	x	x	1	1	x	x	x	x	x	x	x	0
Bit	31	30	29	28	27	26	25	24	23	22	21	20	19	18	17	16	15	14	13	12	11	10	9	8	7	6	5	4	3	2	1	0

0 = False
1 = True

No.	Name Description	Values	Linkable	Read-Write	Data Type

513 **V/Hz Mode Config**

Configures V/Hz control mode operation.

Notes: This parameter was added for firmware version 2.003. Changed bit 3 from "Reserved" to "FastFluxDsbl" for firmware version 3.003. Bits 8, 9, and 21 were changed to be not changeable while the drive is running.

ATTENTION: Do not modify this parameter. Motor/Drive instabilities and damage may result.

Options	Reserved	Reserved	Reserved	Reserved	Reserved	Reserved	Reserved	Reserved	Reserved	Reserved	VltMinorLpEn	Reserved	Reserved	Reserved	Reserved	Reserved	Reserved	Reserved	Reserved	Reserved	Reserved	Reserved	RefIWaveComp	BusGain Comp	Reserved	Reserved	Reserved	Reserved	FastFluxDsbl	Reserved	Reserved	Reserved
Default	x	x	x	x	x	x	x	x	x	x	1	x	x	x	x	x	x	x	x	x	x	x	1	1	x	x	x	x	1	x	x	x
Bit	31	30	29	28	27	26	25	24	23	22	21	20	19	18	17	16	15	14	13	12	11	10	9	8	7	6	5	4	3	2	1	0

0 = False
1 = True

514 **Test Mode Config**

Configures the Motor Control (MC) test mode.

Note: This parameter was changed to non-linkable for firmware version 3.001.

ATTENTION: Do not modify this parameter. Motor/Drive instabilities and damage may result.

Options	Reserved	Reserved	Reserved	Reserved	Reserved	Reserved	Reserved	Reserved	Reserved	Reserved	Reserved	Reserved	Reserved	Reserved	Reserved	Reserved	Reserved	Reserved	Reserved	Reserved	Reserved	Reserved	RefIWave Comp	BusGain Comp	Reserved	Reserved	Reserved	Reserved	Reserved	Reserved	Reserved	Reserved
Default	x	x	x	x	x	x	x	x	x	x	x	x	x	x	x	x	x	x	x	x	x	x	1	1	x	x	x	x	x	x	x	x
Bit	31	30	29	28	27	26	25	24	23	22	21	20	19	18	17	16	15	14	13	12	11	10	9	8	7	6	5	4	3	2	1	0

0 = False
1 = True

515 **FVC Tune Config**

Configures FOC tuning mode.

- Bit 1 "FluxCurrTune" when set, the value in Par 488 [Flux Current] is used as the flux current at the beginning of the magnetic inductance test. When this bit is not set (default), an automatically calculated (preset) flux current is used as the flux current at the beginning of the magnetic inductance test.
- Bit 2 "NoTimeLimit" when set, the time limit fault detection during the magnetizing inductance test is disabled.

Note: Bits 1 and 2 were added for firmware version 4.001.

ATTENTION: Do not modify this parameter. Motor/Drive instabilities and damage may result.

Options	Reserved	Reserved	Reserved	Reserved	Reserved	Reserved	NoRotateTune	Reserved	Reserved	Reserved	Reserved	Reserved	Reserved	NoTimeLimit	FluxCurrTune	Reserved
Default	x	x	x	x	x	x	0	x	x	x	x	x	x	0	0	x
Bit	15	14	13	12	11	10	9	8	7	6	5	4	3	2	1	0

0 = False
1 = True

No.	Name Description	Values	Linkable	Read-Write	Data Type

516 **FVC2 Tune Config**
Configures FOC 2 tuning mode.

ATTENTION: Do not modify this parameter. Motor/Drive instabilities and damage may result.

Options	Reserved	Reserved	Reserved	Reserved	Reserved	Reserved	NoRotateTune	Reserved	Reserved	Reserved	Reserved	Reserved	Reserved	Reserved	Reserved	Reserved
Default	x	x	x	x	x	x	0	x	x	x	x	x	x	x	x	x
Bit	15	14	13	12	11	10	9	8	7	6	5	4	3	2	1	0

0 = False
1 = True

517 **PMag Tune Config**
Configures Permanent Magnet Motor tuning mode.

ATTENTION: Do not modify this parameter. Motor/Drive instabilities and damage may result.

Options	Reserved	Reserved	Reserved	Reserved	Reserved	Reserved	Reserved	IndTestA set	Reserved	Reserved	Reserved	Reserved	Reserved	Reserved	Reserved	Reserved
Default	x	x	x	x	x	x	x	0	x	x	x	x	x	x	x	x
Bit	15	14	13	12	11	10	9	8	7	6	5	4	3	2	1	0

0 = False
1 = True

518 **MC Diag Status**
Indicates the status of the MC diagnostic tests.

Options	Reserved	Reserved	Reserved	Reserved	Reserved	Reserved	Reserved	PwrDiagFltPt	PM EncOffset	Rot Dir Chk	CommCntEncls	Comm Count	CommParamCal	CommLmEncles	Comm Lm Meas	Comm SigmaLs	Comm Rs Meas	PDgTrWP-VNOn	PDgTrWP-UNOn	PDgTrVP-WNOn	PDgVP-UNOn	PDgUP-WNOn	PDgTrUP-VNOn	PDgTrUNWNOn	PDgTrUPWPOn	Pdiag TrWNOn	Pdiag TrVNOn	Pdiag TrUNOn	Pdiag TrWPOn	Pdiag TrVPOn	Pdiag TrUPOn	Pdg VbusSens
Default	x	x	x	x	x	x	x	0	0	0	0	0	0	0	0	0	0	0	0	0	0	0	0	0	0	0	0	0	0	0	0	0
Bit	31	30	29	28	27	26	25	24	23	22	21	20	19	18	17	16	15	14	13	12	11	10	9	8	7	6	5	4	3	2	1	0

0 = False
1 = True

519 **MC Diag Done**
Indicates which MC diagnostic tests are completed.

Options	Reserved	Reserved	Reserved	Reserved	Reserved	Reserved	Reserved	PwrDiagFltPt	PM EncOffset	Rot Dir Chk	CommCntEncls	Comm Count	CommParamCal	CommLmEncles	Comm Lm Meas	Comm SigmaLs	Comm Rs Meas	PDgTrWP-VNOn	PDgTrWP-UNOn	PDgTrVP-WNOn	PDgVP-UNOn	PDgUP-WNOn	PDgTrUP-VNOn	PDgTrUNWNOn	PDgTrUPWPOn	Pdiag TrWNOn	Pdiag TrVNOn	Pdiag TrUNOn	Pdiag TrWPOn	Pdiag TrVPOn	Pdiag TrUPOn	Pdg VbusSens
Default	x	x	x	x	x	x	x	0	0	0	0	0	0	0	0	0	0	0	0	0	0	0	0	0	0	0	0	0	0	0	0	0
Bit	31	30	29	28	27	26	25	24	23	22	21	20	19	18	17	16	15	14	13	12	11	10	9	8	7	6	5	4	3	2	1	0

0 = False
1 = True

520 **PM Q Inductance**
Indicates the percent-per unit inductance of the motor stator in the torque producing (q-axis).

Values		Linkable	Read-Write	Data Type
Default:	20.00		RW	16-bit Integer
Min/Max:	0.00/399.99			
Units:	%			
Scale:	100 = 8192			

521 **PM D Inductance**
Indicates the percent-per unit inductance of the motor stator in the flux producing (d-axis).

Values		Linkable	Read-Write	Data Type
Default:	20.00		RW	16-bit Integer
Min/Max:	0.00/399.99			
Units:	%			
Scale:	100 = 8192			

No.	Name Description	Values		Linkable	Read-Write	Data Type
522 A	**PM Stator Resist** Indicates the percent-per unit resistance of the motor stator.	Default: Min/Max: Units: Scale:	1.50 0.00/100.00 % 100 = 8192		RW	16-bit Integer
523 A	**PM Mtr CEMF Coef** Indicates the coefficient for Counter Electro Motive Force (CEMF) voltage, normalized to base motor speed.	Default: Min/Max: Units: Scale:	89.99 0.00/399.99 % 100 = 8192		RW	16-bit Integer
525	**Slip Ratio** Used by the Field Oriented Control - 2 (FOC2) mode. Indicates the present operating slip frequency at 100% Torque Producing Current (Iqs) scaled to hertz x 100.	Default: Min/Max: Units: Scale:	0.00 0.00/327.67 Hz x 10		RO	16-bit Integer
526 A	**Stator Frequency** Displays stator frequency as a percentage of Par 3 [Motor NP Hertz].	Default: Min/Max: Units: Scale:	0.0 -/+800.0 % x 10		RO	16-bit Integer
527 A	**Start/Acc Boost** Sets the voltage boost level for starting and acceleration when "V/Hz" mode is selected. Note: This parameter was added for firmware version 2.003.	Default: Min/Max: Units:	50.0 0.0/1150.0 VAC		RW	16-bit Integer
528 A	**Run Boost** Sets the boost level for steady state or deceleration when "V/Hz" mode is selected. Note: This parameter was added for firmware version 2.003.	Default: Min/Max: Units:	50.0 0.0/1150.0 VAC		RW	16-bit Integer
529 A	**Break Voltage** Sets the voltage the drive will output at Par 530 [Break Frequency]. Note: This parameter was added for firmware version 2.003.	Default: Min/Max: Units:	1150.0 0.0/6900.0 VAC		RW	16-bit Integer
530 A	**Break Frequency** Sets the frequency the drive will output at Par 529 [Break Voltage]. Note: This parameter was added for firmware version 2.003.	Default: Min/Max: Units:	150.0 0.0/400.0 Hz		RW	16-bit Integer
531 A	**Maximum Voltage** Sets the highest voltage the drive will output. Note: This parameter was added for firmware version 2.003.	Default: Min/Max: Units:	460.0 60.0/690.0 VAC		RW	16-bit Integer
532 A	**Maximum Freq** Sets the highest frequency the drive will output. This parameter is a function of Par 3 [Motor NP Hertz]. Note: This parameter was added for firmware version 2.003.	Default: Min/Max: Units:	(Par 3 [Motor NP Hertz] x 2) + 10Hz Par 3 [Motor NP Hertz] + 10 Hz/420.0 Hz		RW	16-bit Integer
533 A	**SlewRateTimeLimt** Defines the time limit in seconds during which torque producing voltage (Vqs) regulator output variations are limited by each slew rate at the transition where the Vqs regulator turns on. The same time limit is applied at the transition to the slip regulator when the slip regulator turns on. A value of zero disables the slew rate function on both the Vqs regulator output and the slip regulator output. Par 553 defines the slew rate for the slip regulator and Par 586 [IdsCmd Slew Rate] defines the slew rate for the Vqs regulator. Notes: This parameter was added for firmware version 3.001. This parameter was renamed from "Flux Gain Adjust" to "SlewRateTimeLimit", the default value was changed to "10.0" and the minimum value was changed to "0.0" for firmware version 4.001.	Default: Min/Max:	0.0 0.0/1126.0		RW	16-bit Integer
534 A	**Nth CompOff Freq** The Nth compensation current amplitude is constant (defined by Par 595 [Nth Amplitude]) up to this frequency, then linearly reduced to zero at the frequency of Par 534 + 6.25%. Note: This parameter was added for firmware version 5.002.	Default: Min/Max: Scaling:	819 0/32767 4096/Par 3 [Motor NP Hertz]		RW	16-bit Integer
535 A	**Mth CompOff Freq** The Mth compensation current amplitude is constant (defined by Par 598 [Mth Amplitude]) up to this frequency, then linearly reduced to zero at the frequency of Par 535 + 6.25%. Note: This parameter was added for firmware version 5.002.	Default: Min/Max: Scaling:	819 0/32767 4096/Par 3 [Motor NP Hertz]		RW	16-bit Integer
537 A	**SrLssAngleStblty** Adjusts the electrical angle to maintain stable motor operation. An increase in the value increases the angle adjustment.	Default: Min/Max:	51.0 0.0/32767.0		RW	16-bit Integer
538 A	**SrLss VoltStblty** Adjusts the voltage to maintain stable motor operation. An increase in the value increases the output voltage adjustment.	Default: Min/Max:	93.0 0.0/32767.0		RW	16-bit Integer
539 A	**SrLss StbltyFilt** The coefficient is used to adjust the bandwidth of a low pass filter. The smaller the value of the coefficient, the lower the bandwidth of the filter.	Default: Min/Max:	3250.0 0.0/32767.0		RW	16-bit Integer

No.	Name Description	Values		Linkable	Read-Write	Data Type
540	**V/Hz Status** Indicates the limit status of the V/Hz Control Operation. Note: This parameter was added form firmware version 2.003.					

Options	Reserved	Reserved	Reserved	Reserved	Reserved	Reserved	Reserved	Reserved	Reserved	Reserved	Reserved	Reserved	Reserved	Reserved	Bus Volt Lim	Current Lim
Default	x	x	x	x	x	x	x	x	x	x	x	x	x	x	0	0
Bit	15	14	13	12	11	10	9	8	7	6	5	4	3	2	1	0

0 = False
1 = True

No.	Name Description	Values		Linkable	Read-Write	Data Type
541 A	**SrLss Angl Comp** Not currently used. Note: This parameter was added for future use - not active for use with firmware version 2.003 and above.	Default: Min/Max:	0.0 +/- 16384		RW	16-bit Integer
542 A	**SrLss Volt Comp** Not currently used. Note: This parameter was added for future use - not active for use with firmware version 2.003 and above.	Default: Min/Max: Units:	100.0 +/- 1000.0 V		RW	16-bit Integer
544	**External DB Res** Sets the resistance value of an external dynamic braking resistor. This value is used to determine the power applied to the resistor and thus calculate its temperature. Note: This parameter was added for firmware version 4.001.	Default: Min/Max: Units:	49.0 0.1/500.0 Ohm		RW	Real
545 A	**Bus Reg Ki** Sets the responsiveness of the bus regulator. Note: This parameter was added for firmware version 2.003.	Default: Min/Max:	450.0 0.0/100000		RW	16-bit Integer
546 A	**Bus Reg Kp** Proportional gain for the bus regulator. Used to adjust regulator response. Note: This parameter was added for firmware version 2.003.	Default: Min/Max:	1500.0 0.0/10000.0		RW	16-bit Integer
547 A	**Bus Reg Kd** Derivative gain for the bus regulator. Used to control regulator overshoot. Note: This parameter was added for firmware version 2.003.	Default: Min/Max:	1000.0 0.0/10000.0		RW	16-bit Integer
548 A	**Bus Reg ACR Kp** This proportional gain, in conjunction with Par 545 [Bus Reg Ki], adjusts the output frequency of the drive during a bus limit or inertia ride through condition. The output frequency is adjusted in response to an error in the active, or torque producing, current to maintain the active bus limit, or inertia ride through bus reference. A larger value of gain reduces the dynamic error of the active current. Note: This parameter was added for firmware version 2.003.	Default: Min/Max:	225.0 0.0/100000		RW	16-bit Integer
549	**Vuv Fdbk Offset** Displays the motor U phase to V phase offset voltage from the voltage feedback circuit. The value of the offset is a uni-polarity signal. A zero offset is equal to 16384. Note: This parameter was added for firmware version 3.001.	Default: Min/Max:	16384.0 15764.0/17004.0		RW	16-bit Integer
550	**Vvw Fdbk Offset** Displays the motor V phase to W phase offset voltage from the voltage feedback circuit. The value of the offset is a uni-polarity signal. A zero offset is equal to 16384. Note: This parameter was added for firmware version 3.001.	Default: Min/Max:	16384.0 15764.0/17004.0		RW	16-bit Integer
551 A	**CurrFdbk AdjTime** Compensates for current feedback delays in High Horse Power drives (frames 9 and up). Note: This parameter was added for firmware version 3.001.	Default: Min/Max: Units:	0.0 0.0/50.0 µs		RW	16-bit Integer
552 A	**Slip Preload Val** The Slip Gain value to be pre-loaded if the drive is powered down. Note: This parameter was added for firmware version 3.001.	Default: Min/Max:	120.0 0.0/8192.0		RW	32-bit Integer
553 A	**Slip Slew Rate** Sets the rate at which the Slip Gain Regulator output transitions from the inactive state to the active state. Notes: This parameter was added for firmware version 3.001. The default value was changed from "2.000" to "0.200" for firmware version 4.001.	Default: Min/Max: Units:	0.200 0.010/16.383 µs		RW	Real

No.	Name Description	Values	Linkable	Read-Write	Data Type

554 **LED Status**

Used to monitor LED statuses including the main controller, SynchLink and DriveLogix5370 from a HIM or an application program (e.g., DriveExplorer™). This feature is only available with DriveLogix version 15.03 or later.

- Bit 0 "Sts Active" - Drive running, no faults are present.
- Bit 1 "Sts Ready" - Drive ready, but not running & no faults are present.
- Bit 2 "Sts HW Fault" - A non-resettable fault has occurred in the drive.
- Bit 3 "Sts Fault" - A fault has occurred in the drive.
- Bit 4 "Sts Alarm" - A type 1 (user configurable) alarm condition exists, but the drive continues to run.
- Bit 5 "Sts RunInhbt" - A type 2 (non-configurable) alarm condition exists, drive continues to run.
- Bit 6 "Sync InSync" - The module is configured as the time keeper or the module is configured as a follower and synchronization is complete.
- Bit 7 "Sync NotSync" - The follower(s) are not configured with the time keeper.
- Bit 8 "DL Run Mode" - The controller is in "Run" mode.
- Bit 9 "DL Force Act" - I/O forces are active (enabled) but may or may not exist.
- Bit 10 "DL ForceNtEn" - One or more input or output addresses have been forced to an On or Off state, but the forces have not been enabled.
- Bit 11 "DL Battery" - Either the battery is not installed or 95% discharged and should be replaced.
- Bit 12 "DL I/O Activ" - The controller is communicating with all the devices in its I/O configuration.
- Bit 13 "DL I/O Alarm" - One or more devices in the I/O configuration of the controller are not responding.
- Bit 14 "DL I/O Fault" - The controller is not communicating to any devices and is faulted.
- Bit 15 "DL ComActive" - RS-232 activity.
- Bit 16 "DL Fault" - The controller detected a non-recoverable fault, so it cleared the project from memory.
- Bit 17 "DL NotActive" - If the controller is a new, then it requires a firmware update, or if the controller is not new, a major fault occurred.
- Bit 18 "DL OK" - Controller is OK.
- Bit 19 "DL Loading" - The controller is storing or loading a project to or from nonvolatile memory.
- Bit 20 "DL CF Flash" - The controller is reading from or writing to the CompactFlash™ card.
- Bit 21 "DL CF Format" - The CompactFlash memory is not initialized.
- Bit 22 "DL CF Error" - CompactFlash card does not have a valid file system.

Note: This parameter was added for firmware version 3.001.

Options	Reserved	Reserved	Reserved	Reserved	Reserved	Reserved	Reserved	Reserved	Reserved	DL CF Error	DL CF Format	DL CF Flash	DL Loading	DL OK	DL NotActive	DL Fault	DL ComActive	DL I/O Fault	DL I/O Alarm	DL I/O Activ	DL Battery	DL ForceNtEn	DL Force Act	DL Run Mode	Sync NotSync	Sync InSync	Sts RunInhbt	Sts Alarm	Sts Fault	Sts HW Fault	Sts Ready	Sts Active
Default	x	x	x	x	x	x	x	x	x	0	0	0	0	0	0	0	0	0	0	0	0	0	0	0	0	0	0	0	0	0	0	0
Bit	31	30	29	28	27	26	25	24	23	22	21	20	19	18	17	16	15	14	13	12	11	10	9	8	7	6	5	4	3	2	1	0

0 = False
1 = True

555 **MC Status**

Indicates the status of the Motor Control (MC) Processor and related functions.

Note: Changed bit 18 from "Reserved" to "Vqs Reg Act" for firmware version 3.003.

Options	Min Vqs	MaxDCBus Vqs	MaxMotor Vqs	Max Vds	Min Vds	SrLssWsLimit	Slip Limit	Regen	Iqs Limit	FldWeakening	MC FW Group2	Reserved	Reserved	Vqs Reg Act	FluxRatioRef	Command Lim	DC Bus Low	MC Test Mode	PreChrg Req	PWM En	PreChrg Done	Flux En	Torque En	Change Dir	MC CommisFlt	MC CommisRun	MC Fault	MC Ready	BaseBlockReq	TorqueRunReq	Flux Run Req	MC En Req
Default	0	0	0	0	0	0	0	0	0	0	0	x	x	0	0	0	0	0	0	0	0	0	0	0	0	0	0	0	0	0	0	0
Bit	31	30	29	28	27	26	25	24	23	22	21	20	19	18	17	16	15	14	13	12	11	10	9	8	7	6	5	4	3	2	1	0

0 = False
1 = True

556 **Trend Control**

Set bits to configure the Data Trend function:

- Bit 0 "Enbl Collect" - Trend data collection begins on the rising edge of this bit and continues until either this bit is set low or the trend data has been completely collected. This bit should be cleared following either the 'Triggered' status or 'Complete' status in order to complete the trend sequence. This bit can also be cleared at any time to force the trend data sampling to stop and set the 'Complete' status bit.
- Setting bit 1 "In1 Real" - specifies the Real data type for Trend Input 1. The source for Real data is Par 571 [Trend In1 Real]. Clearing the bit specifies the Integer data type. The source for Integer data is Par 570 [Trend In1 DInt].
- Setting bit 2 "In2 Real" - specifies the Real data type for Trend Input 2. The source for Real data is Par 575 [Trend In2 Real]. Clearing the bit specifies the Integer data type. The source for Integer data is Par 574 [Trend In2 DInt].
- Setting bit 3 "In3 Real" - specifies the Real data type for Trend Input 3. The source for Real data is Par 579 [Trend In3 Real]. Clearing the bit specifies the Integer data type. The source for Integer data is Par 578 [Trend In3 DInt].
- Setting bit 4 "In4 Real" - specifies the Real data type for Trend Input 4. The source for Real data is Par 583 [Trend In4 Real]. Clearing the bit specifies the Integer data type. The source for Integer data is Par 582 [Trend In4 DInt].
- Setting bit 15 "Auto Output" causes the trend output parameters to automatically cycle through the entire trend buffer at the rate specified in Par 559 [Trend Rate]. Typically, you link the output to an analog output for display on an oscilloscope.
- Auto output is accomplished by writing to Par 569 [TrendBuffPointer]. Clearing this bit requires manual selection of Par 569 [TrendBuffPointer] to view the trend buffer contents.

Options	Auto Output	Reserved	Reserved	Reserved	Reserved	Reserved	Reserved	Reserved	Reserved	Reserved	Reserved	In 4 Real	In 3 Real	In 2 Real	In 1 Real	Enbl Collect
Default	0	x	x	x	x	x	x	x	x	x	x	0	0	0	0	0
Bit	15	14	13	12	11	10	9	8	7	6	5	4	3	2	1	0

0 = False
1 = True

No.	Name Description	Values	Linkable	Read-Write	Data Type
557	**Trend Status** Bits indicate the status of the Data Trend function: • Bit 1 "Triggered" indicates a Trend Trigger event has been detected. This bit will clear in response to the rise of Par 556 [Trend Control], bit 0 "Enbl Collect". • Bit 2 "Complete" indicates all the post trigger data samples have been gathered and the trend buffers are full. It will also be set if the Par 556 [Trend Control], bit 0 "Enbl Collect" is cleared before the trigger occurs. The trend data outputs will be updated from the contents of the trend buffer data when this bit is set. Par 556 [Trend Control], bit 0 "Enbl Collect" can be cleared after this bit is set without affecting the trend data buffer contents. This bit will clear in response to the rise of Par 556 [Trend Control], bit 0 "Enbl Collect". The trend outputs will be forced to zero while this bit is clear.				

Options	Reserved	Reserved	Reserved	Reserved	Reserved	Reserved	Reserved	Reserved	Reserved	Reserved	Reserved	Reserved	Reserved	Reserved	Reserved	Reserved	Reserved	Reserved	Reserved	Reserved	Reserved	Reserved	Reserved	Reserved	Reserved	Reserved	Reserved	Reserved	Reserved	Reserved	Complete	Triggered	Reserved
Default	x	x	x	x	x	x	x	x	x	x	x	x	x	x	x	x	x	x	x	x	x	x	x	x	x	x	x	x	x	x	0	0	x
Bit	31	30	29	28	27	26	25	24	23	22	21	20	19	18	17	16	15	14	13	12	11	10	9	8	7	6	5	4	3	2	1	0	

0 = False
1 = True

558	**Trend State** Value indicates the state of the Data Trend function. • Value 0 - Wait Enable indicates the trend function is ready and waiting to begin data collection. Setting bit 0 "Enbl Collect" of Par 556 [Trend Control] will cause data collection to begin. In this state, Par 569 [TrendBuffPointer] and the Trend Output Parameters are active. • Value 1 - First Scan indicates the Trend function is executing the first pass through the trend sample buffer. This takes 512 ms. (0.5 ms x 1024 samples). When it enters this state, the Trend function clears bit 1 "Triggered" and 2 "Complete" bits of Par 557 [Trend Status]. While in this state, the Trend function refreshes the data. Also while in this state, the function forces the Trend Output parameters to zero. When done, it enters the Pre-trigger state. • Value 2 - Pre-trigger indicates the Trend function is sampling the trend inputs and storing them in memory, at a rate determined by Par 559 [Trend Rate]. Sampling continues until either the trend trigger event occurs or bit 0 "Enbl Collect" of Par 556 [Trend Control] is cleared. While in this state, the Trend function forces the Trend Output parameters to zero. If the trigger event occurs, the function sets bit 1 "Triggered" of Par 557 [Trend Status] and enters the Post-trigger state. If bit 0 "Enbl Collect" of Parameter 556 [Trend Control] is cleared, the function sets bit 2 "Complete" of Par 557 [Trend Status] and returns to the Wait Enable state. • Value 3 - Post-trigger indicates the Trend function is continuing to sample and save the trend inputs until the buffer is full. While in this state, the function forces the Trend Output parameters to zero value. When the buffer is full, the function sets bit 2 "Complete" of Par 557 [Trend Status] and enters the Wait Disable state. • Value 4 - Wait Disable indicates the Trend function is complete and waiting for bit 0 "Enbl Collect" of Par 556 [Trend Control] to be cleared. When this is done, the trend function returns to the Wait Enable state. While in the Wait Disable state, Par 569 [TrendBuffPointer] and the Trend Output Parameters are active.	Default: 0 = "Wait Enable" Options: 0 = "Wait Enable" 1 = "First Scan" 2 = "Pre-trigger" 3 = "Post-trigger" 4 = "Wait Disable" 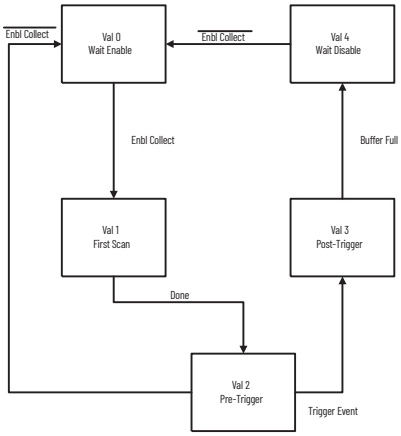 			
559	**Trend Rate** Sets the sample time for both trend input and output updates.	Default: 0.5000 Min/Max: 0.5000/1000.0000 Units: ms	Y	RW	Real
560	**Trend TrigA DInt** Provides the integer input for the A trigger function. This integer is converted to a real number and summed with Par 561 [Trend TrigA Real]. The result is compared with the Trigger B sum. If the A sum exceeds the B sum, then a trend trigger will occur.	Default: 0 Min/Max: -/+2147483648	Y	RW	32-bit Integer
561	**Trend TrigA Real** Provides the real input for the A trigger function. This real number is summed with Par 560 [Trend TrigA Int]. The result is compared with the Trigger B sum. If the A sum exceeds the B sum, then a trend trigger will occur.	Default: 0.0000 Min/Max: -/+2200000000.0000	Y	RW	Real
562	**Trend TrigB DInt** Provides the integer input for the B trigger function. This integer is converted to a real number and summed with Par 563 [Trend TrigB Real]. The result is compared with the Trigger A sum. If the A sum exceeds the B sum, then a trend trigger will occur.	Default: 0 Min/Max: -/+2147483648	Y	RW	32-bit Integer
563	**Trend TrigB Real** Provides the real input for the B trigger function. This real number is summed with Par 562 [Trend TrigB Int]. The result is compared with the Trigger A sum. If the A sum exceeds the B sum, then a trend trigger will occur.	Default: 0.0000 Min/Max: -/+2200000000.0000	Y	RW	Real
564	**Trend Trig Data** This is the logic input for the Trend Trigger Function. A trigger will occur on the rise of the specified bit in this word. The bit will be specified by Par 565 [Trend Trig Bit].	Default: 00000000000000000000000000000000 Min: 00000000000000000000000000000000 Max: 11111111111111111111111111111111	Y	RW	32-bit Boolean
565	**Trend Trig Bit** Specifies the bit in Par 564 [Trend Trig Data] that will cause a Trend Trigger to occur. Positive numbers specify rising edges and negative numbers specify falling edges.	Default: 0 Min/Max: -32/31	Y	RW	16-bit Integer
566	**Trend PreSamples** Specifies the number pre-trigger samples in the trend buffer. Pre-trigger samples are the samples that occur before the trigger and remain in the buffer. The remainder of the trend buffer will contain post-trigger samples.	Default: 511 Min/Max: 0/1022	Y	RW	16-bit Integer

No.	Name Description	Values		Linkable	Read-Write	Data Type
567	**Trend Mark DInt** Marks the start of data for trend buffers that are using integer data. The Trend Marker can be used to provide a scope trigger signal for the Auto Output function.	Default: Min/Max:	0 -/+2147483648	Y	RW	32-bit Integer
568	**Trend Mark Real** Marks the start of data for trend buffers that are using real data. The Trend Marker can be used to provide a scope trigger signal for the Auto Output function.	Default: Min/Max:	0.0000 -/+2200000000.0000	Y	RW	Real
569	**TrendBuffPointer** Selects the trend buffer element to be displayed in the Trend Output Parameters when the trend function is inactive (not collecting data samples). A zero value points to the element that corresponds to the trigger event. Negative values point to pre-trigger data. Positive values point to post-trigger data. When the Auto Output function is running, this parameter will automatically sequence through it's full range, at a rate set by Par 559 [Trend Rate].	Default: Min/Max:	0 -/+1023	Y	RW	16-bit Integer
570	**Trend In1 DInt** Provides integer input to the Trend 1. The Trending function samples this parameter for Trend Buffer 1, if bit 1 "In 1 Real" is cleared.	Default: Min/Max:	0 -/+2147483648	Y	RW	32-bit Integer
571	**Trend In1 Real** Provides real input to the Trend 1. The Trending function samples this parameter for Trend Buffer 1, if bit 1 "In 1 Real" is set.	Default: Min/Max:	0.0000 -/+2200000000.0000	Y	RW	Real
572	**Trend Out1 DInt** Displays the output for Trend Buffer 1, if the buffer is using integer data. This will equal the value of the element, in Trend Buffer 1, specified by Par 569 [TrendBuffPointer].	Default: Min/Max:	0 -/+2147483648		RO	32-bit Integer
573	**Trend Out1 Real** Displays the output for Trend Buffer 1, if the buffer is using real data. This will equal the value of the element, in Trend Buffer 1, specified by Par 569 [TrendBuffPointer].	Default: Min/Max:	0.0000 -/+2200000000.0000		RO	Real
574	**Trend In2 DInt** Provides integer input to the Trend 2. The Trending function samples this parameter for Trend Buffer 2, if bit 2 "In 2 Real" is cleared.	Default: Min/Max:	0 -/+2147483648	Y	RW	32-bit Integer
575	**Trend In2 Real** Provides real input to the Trend 2. The Trending function samples this parameter for Trend Buffer 2, if bit 2 "In 2 Real" is set.	Default: Min/Max:	0.0000 -/+2200000000.0000	Y	RW	Real
576	**Trend Out2 DInt** Displays the output for Trend Buffer 2, if the buffer is using integer data. This will equal the value of the element, in Trend Buffer 2, specified by Par 569 [TrendBuffPointer].	Default: Min/Max:	0 -/+2147483648		RO	32-bit Integer
577	**Trend Out2 Real** Displays the output for Trend Buffer 2, if the buffer is using real data. This will equal the value of the element, in Trend Buffer 2, specified by Par 569 [TrendBuffPointer].	Default: Min/Max:	0.0000 -/+2200000000.0000		RO	Real
578	**Trend In3 DInt** Provides integer input to the Trend 3. The Trending function samples this parameter for Trend Buffer 3, if bit 3 "In 3 Real" is cleared.	Default: Min/Max:	0 -/+2147483648	Y	RW	32-bit Integer
579	**Trend In3 Real** Provides real input to the Trend 3. The Trending function samples this parameter for Trend Buffer 3, if bit 3 "In 3 Real" is set.	Default: Min/Max:	0.0000 -/+2200000000.0000	Y	RW	Real
580	**Trend Out3 DInt** Displays the output for Trend Buffer 3, if the buffer is using integer data. This will equal the value of the element, in Trend Buffer 3, specified by Par 569 [TrendBuffPointer].	Default: Min/Max:	0 -/+2147483648		RO	32-bit Integer
581	**Trend Out3 Real** Displays the output for Trend Buffer 3, if the buffer is using real data. This will equal the value of the element, in Trend Buffer 3, specified by Par 569 [TrendBuffPointer].	Default: Min/Max:	0.0000 -/+2200000000.0000		RO	Real
582	**Trend In4 DInt** Provides integer input to the Trend 4. The Trending function samples this parameter for Trend Buffer 4, if bit 4 "In 4 Real" is cleared.	Default: Min/Max:	0 -/+2147483648	Y	RW	32-bit Integer
583	**Trend In4 Real** Provides real input to the Trend 4. The Trending function samples this parameter for Trend Buffer 4, if bit 4 "In 4 Real" is set.	Default: Min/Max:	0.0000 -/+2200000000.0000	Y	RW	Real
584	**Trend Out4 DInt** Displays the output for Trend Buffer 4, if the buffer is using integer data. This will equal the value of the element, in Trend Buffer 4, specified by Par 569 [TrendBuffPointer].	Default: Min/Max:	0 -/+2147483648		RO	32-bit Integer
585	**Trend Out4 Real** Displays the output for Trend Buffer 4, if the buffer is using real data. This will equal the value of the element, in Trend Buffer 4, specified by Par 569 [TrendBuffPointer].	Default: Min/Max:	0 -/+2200000000.0000		RO	Real
586 A	**IdsCmd Slew Rate** Defines the slew rate for the torque producing voltage (Vqs) regulator. The output variation is limited by one count every Par 586 / 16 sec. Notes: This value should not be changed. This parameter was added for firmware version 4.001.	Default: Min/Max: Units:	5.000 0.000/16.383 s		RW	Real

No.	Name Description	Values		Linkable	Read-Write	Data Type
587	**SlipReg Err Lmt** Defines the error level at which the slip regulator input becomes active. When the error level reaches the value specified in this parameter and the error count condition (specified in Par 589 [Err Count Lmt]) is met, the drive control will transition from the slew rate limit mode to normal operation of the slip regulator. Notes: This value should not be changed. This parameter was added for firmware version 4.001.	Default: Min/Max:	0 +/-32767		RW	16-bit Integer
588	**VqsReg Err Lmt** Defines the error level at which the Flux Producing Voltage (Vqs) regulator input becomes active. When the error level reaches the value specified in this parameter and the error count condition (specified in Par 589 [Err Count Lmt]) is met, the drive control will transition from the slew rate limit mode to normal operation of the Vqs regulator. Notes: This value should not be changed. This parameter was added for firmware version 4.001.	Default: Min/Max:	0 +/-32767		RW	16-bit Integer
589	**Err Count Lmt** Defines the control loop counts limit, where the counter counts up if the error level of the Vqs regulator input is equal to the error level during Flux Producing Current (Ids) command Slew Rate operation. When the counter exceeds the value of this parameter then the normal Vqs regulator operation becomes active. The same limit of control loop counts is applied to the Slip Slew Rate operation, where the counter counts up if the error level of the Slip regulator input is equal to the error level during Slip Slew Rate operation. When the counter exceeds the value of this parameter then the normal Slip regulator operation becomes active. Notes: This value should not be changed. This parameter was added for firmware version 4.001.	Default: Min/Max:	0 +/-32767		RW	16-bit Integer
590	**RsTempCoefAdjust** The value specified in this parameter adjusts the temperature compensation coefficient which is calculated based on the Slip regulator output. A value of 4096 in this parameter doubles the compensation coefficient. Notes: This value should not be changed. This parameter was added for firmware version 4.001.	Default: Min/Max:	0 +/-32767		RW	16-bit Integer
591	**RsTmpCoefAdjstEn** A value of "1" in this parameter enables the temperature compensation function in flux and torque estimate calculation, where the temperature information is based on the Slip regulator output. A value of "0" in this parameter disables the temperature compensation function. Notes: This value should not be changed. This parameter was added for firmware version 4.001.	Default: Min/Max:	0 +/-32767		RW	16-bit Integer
592	**VqsReg On Hystr** For Future Use. Note: This parameter was added for firmware version 4.001.	Default: Min/Max:	0 +/-32767		RW	16-bit Integer
593	**SlipReg On Hystr** For Future Use. Note: This parameter was added for firmware version 4.001.	Default: Min/Max:	0 -/+32767		RW	16-bit Integer
594 A	**Nth Torq Compen** Defines harmonic frequency as <n> times mechanical frequency. Note: This parameter was added for firmware version 5.002.	Default: Min/Max:	0 0/1000		RW	16-bit Integer
595 A	**Nth Amplitude** Defines the compensation current amplitude for the Nth harmonic component. Note: This parameter was added for firmware version 5.002.	Default: Min/Max: Scaling:	0 0/4096 4096/Par 2 [Motor NP FLA]		RW	16-bit Integer
596 A	**Nth Phase Shift** Defines the phase shift for the Nth harmonic component. Note: This parameter was added for firmware version 5.002.	Default: Min/Max: Scaling:	0 -/+16384 16384/360 deg		RW	16-bit Integer
597 A	**Mth Torq Compen** Defines harmonic frequency as <m> times mechanical frequency. Note: This parameter was added for firmware version 5.002.	Default: Min/Max:	0 0/1000		RW	16-bit Integer
598 A	**Mth Amplitude** Defines the compensation current amplitude for the Mth harmonic component. Note: This parameter was added for firmware version 5.002.	Default: Min/Max: Scaling:	0 0/4096 4096/Par 2 [Motor NP FLA]		RW	16-bit Integer
599 A	**Mth Phase Shift** Defines the phase shift for the Mth harmonic component. Note: This parameter was added for firmware version 5.002.	Default: Min/Max: Scaling:	0 -/+16384 16384/360 deg		RW	16-bit Integer
600	**Lgx Comm Format** Indicates the Controller to Drive communication format. Note: Option values 1…15 and 20…31 are "Reserved"	Default: Options:	16 = "Speed Ctrl" 0 = "Not Used" 18 = "UserDefin 1" 16 = "Speed Ctrl" 19 = "Motion" 17 = "PositionCtrl" 32 = "CustmUserDef"			

No.	Name Description	Values	Linkable	Read-Write	Data Type

601 **From DL DataType**

Sets the type of data for each word communicated from DriveLogix™ to the PowerFlex 700S drive. Setting a bit High will configure the associated word as a Real data type and setting the bit Low will configure it for Integer data type.

Options	Reserved	Reserved	Reserved	Reserved	Reserved	Reserved	Reserved	Reserved	Reserved	Reserved	Reserved	DL 20 Real	DL 19 Real	DL 18 Real	DL 17 Real	DL 16 Real	DL 15 Real	DL 14 Real	DL 13 Real	DL 12 Real	DL 11 Real	DL 10 Real	DL 09 Real	DL 08 Real	DL 07 Real	DL 06 Real	DL 05 Real	DL 04 Real	DL 03 Real	DL 02 Real	DL 01 Real	DL 00 Real
Default	x	x	x	x	x	x	x	x	x	x	x	0	0	0	0	0	0	0	0	0	0	0	0	0	0	0	0	0	0	0	0	0
Bit	31	30	29	28	27	26	25	24	23	22	21	20	19	18	17	16	15	14	13	12	11	10	9	8	7	6	5	4	3	2	1	0

0 = False
1 = True

602 to **622**	**FromDriveLogix00** to **FromDriveLogix20** These parameters display the input values communicated from the DriveLogix controller to the PowerFlex 700S drive.	Default: Min/Max:	0 -/+32 (dependant on Par 601 [From DL DataType])		RO	32-bit Integer

625 **To DL DataType**

Sets the data type for each word communicated from the PowerFlex 700S drive to DriveLogix. Setting a bit High will configure the associated word as a Real data type and setting the bit Low will configure it for Integer data type.

Options	Reserved	Reserved	Reserved	Reserved	Reserved	Reserved	Reserved	Reserved	Reserved	Reserved	Reserved	DL 20 Real	DL 19 Real	DL 18 Real	DL 17 Real	DL 16 Real	DL 15 Real	DL 14 Real	DL 13 Real	DL 12 Real	DL 11 Real	DL 10 Real	DL 09 Real	DL 08 Real	DL 07 Real	DL 06 Real	DL 05 Real	DL 04 Real	DL 03 Real	DL 02 Real	DL 01 Real	DL 00 Real
Default	x	x	x	x	x	x	x	x	x	x	x	0	0	0	0	0	0	0	0	0	0	0	0	0	0	0	0	0	0	0	0	0
Bit	31	30	29	28	27	26	25	24	23	22	21	20	19	18	17	16	15	14	13	12	11	10	9	8	7	6	5	4	3	2	1	0

0 = False
1 = True

No.	Name Description	Values		Linkable	Read-Write	Data Type
626 to 646	**To DriveLogix00** to **To DriveLogix20** These parameters display the output values communicated from the PowerFlex 700S drive to the DriveLogix controller.	Default: Min/Max:	0 -/+32 (dependant on Par 625 [To DL DataType])	Y	RO	Set by Par 625

650 **DPI In DataType**

Sets the data type for each word communicated from an external controller to the PowerFlex 700S drive via a DPI communication module. Setting a bit high will configure the associated word as a Real data type and setting the bit low will configure it for Integer data type.

Options	DPI D2 Real	DPI D1 Real	DPI C2 Real	DPI C1 Real	DPI B2 Real	DPI B1 Real	DPI A2 Real	DPI A1 Real
Default	0	0	0	0	0	0	0	0
Bit	7	6	5	4	3	2	1	0

0 = False
1 = True

651 652 653 654 655 656 657 658	**DPI Data In A1** **DPI Data In A2** **DPI Data In B1** **DPI Data In B2** **DPI Data In C1** **DPI Data In C2** **DPI Data In D1** **DPI Data In D2** These parameters display the input values communicated from DPI communication modules to the PowerFlex 700S drive.	Default: Min/Max:	0 -/+32 (dependant on Par 650 [DPI In DataType])		RO	32-bit Integer

659 **DPI Out DataType**

Sets the data type for each word communicated from the PowerFlex 700S drive to an external controller via a DPI communication module. Setting a bit high will configure the associated word as a Real data type and setting the bit low will configure it for Integer data type.

Options	DPI D2 Real	DPI D1 Real	DPI C2 Real	DPI C1 Real	DPI B2 Real	DPI B1 Real	DPI A2 Real	DPI A1 Real
Default	0	0	0	0	0	0	0	0
Bit	7	6	5	4	3	2	1	0

0 = False
1 = True

660 661 662 663 664 665 666 667	**DPI Data Out A1** **DPI Data Out A2** **DPI Data Out B1** **DPI Data Out B2** **DPI Data Out C1** **DPI Data Out C2** **DPI Data Out D1** **DPI Data Out D2** These parameters display the output values communicated from the PowerFlex 700S drive to DPI communication modules.	Default: Min/Max:	0 -/+32 (dependant on Par 659 [DPI Out DataType])	Y	RW	Set by Par 659

669 **Write Mask**

Enables/disables write access (parameters, links, etc.) for DPI ports. Changes to this parameter only become effective when power is cycled, the drive is reset or bit 15 "Security" of Par 712 [Write Mask Act], transitions from "1" to "0."
Note: This parameter was added for firmware version 3.001.

Options	DriveLogix	Reserved	Int DPI Comm	Reserved	Aux DPI Conn	Ext DPI Conn	Local HIM	Terminal Blk
Default	1	1	1	x	1	1	1	1
Bit	7	6	5	4	3	2	1	0

0 = False
1 = True

No.	Name Description	Values	Linkable	Read-Write	Data Type

670 Logic Mask
Determines which adapters can control the drive.

671 Start Mask
Controls which adapters can issue start commands.

672 Jog Mask
Controls which adapters can issue jog commands.

673 Direction Mask
Controls which adapters can issue forward/reverse direction commands.

674 Fault Clr Mask
Controls which adapters can clear a fault.

677 Stop Owner
Indicates which adapter are currently issuing a valid stop command.

678 Start Owner
Indicates which adapter are currently issuing a valid start command.

679 Jog Owner
Indicates which adapter are currently issuing a valid jog command.

680 Direction Owner
Indicates which adapter is currently has exclusive control of direction changes.

681 Fault Clr Owner
Indicates which adapter is currently clearing a fault.

Options	DriveLogix	Reserved	Int DPI Conn	Reserved	Aux DPI Conn	Ext DPI Conn	Local HIM	Terminal Blk
Default	1	1	1	1	1	1	1	1
Bit	7	6	5	4	3	2	1	0

0 = False
1 = True

No.	Name	Values	Linkable	Read-Write	Data Type
684	**MotnUpdatePeriod** The servo update period for the servo axis (drive).	Default: 2000 Min/Max: 1/999999 Unit: µs		RO	32-bit Integer
685	**Motn CoarseMulti** Number of Par 684 [MotnUpdatePeriod] comprising one Course Update Period from the Motion Period.	Default: 4 Min/Max: 2/16		RO	32-bit Integer

686 Motn Config A
Configuration bits pertaining to Motion-related functions for the Servo axis.

Options	Reserved	Reserved	Reserved	Reserved	Reserved	Reserved	Reserved	Reserved	Reserved	Reserved	Reserved	Reserved	Reserved	Hrd Ovr Trvl	Sft Ovr Trvl	Polarity Neg
Default	x	x	x	x	x	x	x	x	x	x	x	x	x	0	0	0
Bit	15	14	13	12	11	10	9	8	7	6	5	4	3	2	1	0

0 = False
1 = True

687 Motn Axis Status A
Status bits pertaining to Motion-related functions for the Servo axis.

Options	Reserved	Reserved	Reserved	Reserved	Reserved	Reserved	Reserved	Reserved	Reserved	Reserved	Reserved	Reserved	Reserved	AxisShtdwnC1	Reserved	Reserved	Chng Ref	Reserved	Reserved	Course Updt	CST Updt Err	-Hrd OvrTrvl	+Hrd OvrTrvl	-Sft OvrTrvl	+Sft OvrTrvl	Reserved	Reserved	Reserved	Posit Lock	AxisShutdown	Drv Enable	Motn Action
Default	x	x	x	x	x	x	x	x	x	x	x	x	x	0	x	x	0	x	x	0	0	0	0	0	0	x	x	x	0	0	0	0
Bit	31	30	29	28	27	26	25	24	23	22	21	20	19	18	17	16	15	14	13	12	11	10	9	8	7	6	5	4	3	2	1	0

0 = False
1 = True

688 Motn AxisControl A
Command request bits from the Motion Planner both the Servo and Feedback Only axis.

Options	ChngCmdRefC1	Reserved	Reserved	Reserved	Reserved	Reserved	Reserved	Reserved	Reserved	Reserved	Reserved	Abrt Evnt C1	Abrt Home C1	Reserved	Shutdown C1	Reserved	ChngCmdRefC0	Reserved	Reserved	Reserved	Reserved	Reserved	Reserved	Reserved	Reserved	Reserved	Reserved	Abrt Evnt C0	Abrt Home C0	Reserved	Shutdown C0	Reserved
Default	0	x	x	x	x	x	x	x	x	x	x	0	0	x	0	x	0	x	x	x	x	x	x	x	x	x	x	0	0	x	0	x
Bit	31	30	29	28	27	26	25	24	23	22	21	20	19	18	17	16	15	14	13	12	11	10	9	8	7	6	5	4	3	2	1	0

0 = False
1 = True

No.	Name Description	Values	Linkable	Read-Write	Data Type

689 **Motn Axis Resp**
Command response from both the Servo and Feedback Only Axis to the Motion Planner.

Options	ChngPosRefC1	Reserved	Reserved	Reserved	Reserved	Reserved	Reserved	Reserved	Reserved	Reserved	Reserved	Abrt Evnt C1	Abrt Home C1	Reserved	Shutdown C1	Reserved	Chng XRef C0	Reserved	Reserved	Reserved	Reserved	Reserved	Reserved	Reserved	Reserved	Reserved	Reserved	Abrt Evnt C0	Abrt Home C0	Reserved	Shutdown C0	Reserved
Default	0	x	x	x	x	x	x	x	x	x	x	0	0	x	0	0	0	x	x	x	x	x	x	x	x	x	x	0	0	x	0	x
Bit	31	30	29	28	27	26	25	24	23	22	21	20	19	18	17	16	15	14	13	12	11	10	9	8	7	6	5	4	3	2	1	0

0 = False
1 = True

690 **Motn Cnct Status**
Status of all Motion connections. Also includes status for the configuration state relating to motion connections.

Options	Reserved	Reserved	Reserved	Reserved	Reserved	Reserved	Reserved	Reserved	Reserved	MSO Input	Drive Ready	Asynch Cnct	Event Cnct	Synch Cnct	UserI0 Cnct	Config OK
Default	x	x	x	x	x	x	x	x	x	0	0	0	0	0	0	0
Bit	15	14	13	12	11	10	9	8	7	6	5	4	3	2	1	0

0 = False
1 = True

691 **Motn EventStatus**
Status of all events supported by the Motion Event Connection.
Note: Added bit 9 "Watch Fb Arm" and bit 10 "WatchFbPosit" for firmware version 3.003.

Options	Reserved	Reserved	Reserved	Reserved	Reserved	WatchFbPosit	Watch Fb Arm	Reserved	Home	Home Arm	Regis2 Posit	Regis2 X Arm	Regis1 Posit	Regis1 X Arm	Watch Posit	Watch X Arm
Default	x	x	x	x	x	0	0	x	0	0	0	0	0	0	0	0
Bit	15	14	13	12	11	10	9	8	7	6	5	4	3	2	1	0

0 = False
1 = True

692 **Motn Event Ctrl**
Shows configuration state of Motion Event functions.
Note: Added bit 7 "Watch Fb Rev" for firmware version 3.003.

Options	Reserved	Reserved	Reserved	Reserved	Reserved	Reserved	Reserved	Reserved	Reserved	Home Axis	Event Cndt	Home Type 1	Home Type 0	Wndw Regis2	Wndw Regis1	Watch X Rev
Default	x	x	x	x	x	x	x	x	x	0	0	0	0	0	0	0
Bit	15	14	13	12	11	10	9	8	7	6	5	4	3	2	1	0

0 = False
1 = True

693 **Interp SynchInput**
Bit zero of this parameter is used as the synchronization pulse for the Interpolator. This parameter is linked to Par 700 [Motn Posit Sync] for a Motion Servo Axis. It is linked to "Xsync Status" for a SynchLink application.
Bits 1 - 4 have been changes to "Reserved" for firmware version 2.004.

Options	Reserved	Reserved	Reserved	Reserved	Reserved	Reserved	Reserved	Reserved	Reserved	Reserved	Reserved	Reserved	Reserved	Reserved	Reserved	Reserved	Reserved	Reserved	Reserved	Reserved	Reserved	Reserved	Reserved	Reserved	Reserved	Reserved	Reserved	Reserved	Reserved	Reserved	Reserved	Sync Pulse
Default	x	x	x	x	x	x	x	x	x	x	x	x	x	x	x	x	x	x	x	x	x	x	x	x	x	x	x	x	x	x	x	0
Bit	31	30	29	28	27	26	25	24	23	22	21	20	19	18	17	16	15	14	13	12	11	10	9	8	7	6	5	4	3	2	1	0

0 = False
1 = True

694	**Motn Mx Pos Trvl** Positive soft overtravel threshold for the Motion Servo Axis.	Default: Min/Max:	0 -/+2147483648		RW	32-bit Integer
695	**Motn Mx Neg Trvl** Negative soft overtravel threshold for the Motion Servo Axis.	Default: Min/Max:	0 -/+2147483648		RW	32-bit Integer
696	**Motn PositErrTol** Position error tolerance for the Motion Servo Axis.	Default: Min/Max:	4096 0/2147483648		RW	32-bit Integer
697	**Motn PositLock Tol** Position lock tolerance for the Motion Servo Axis.	Default: Min/Max:	0 0/2147483648		RW	32-bit Integer

No.	Name Description	Values	Linkable	Read-Write	Data Type
698	**Motn Posit Cmmd** Position command input from the Motion Planner. This is linked as the source to the interpolator's Course Position Target.	Default: 0 Min/Max: -/+2147483648		RO	32-bit Integer
699	**Motn Speed Cmmd** Speed command input from the Motion Planner.	Default: 0.0000 Min/Max: -/+8.0000 P.U. Units: P.U.		RO	Real

700 Motn Posit Sync

Synchronization input signal from the Motion Planner. Pulse received once per coarse update period. This is linked as the course to Par 693 [Interp SynchInput].
Note: Bits 2 - 4 have been changed to "Reserved" for firmware version 2.004.

Options	Reserved	Reserved	Reserved	Reserved	Reserved	Reserved	Reserved	Reserved	Reserved	Reserved	Reserved	Reserved	Reserved	Reserved	Reserved	Reserved	Reserved	Reserved	Reserved	Reserved	Reserved	Reserved	Reserved	Reserved	Reserved	Reserved	Reserved	Reserved	Reserved	Reserved	Reserved	Reserved	SyncDataActv	Sync Pulse
Default	x	x	x	x	x	x	x	x	x	x	x	x	x	x	x	x	x	x	x	x	x	x	x	x	x	x	x	x	x	x	x	x	0	0
Bit	31	30	29	28	27	26	25	24	23	22	21	20	19	18	17	16	15	14	13	12	11	10	9	8	7	6	5	4	3	2	1	0		

0 = False
1 = True

No.	Name Description	Values	Linkable	Read-Write	Data Type
701	**FdbkAxis FdbkSel** Selection for the Motion Feedback Only Axis feedback source. Note: Options 5 and 6 are only available when compatible feedback option card is installed. Note: Bit 11 "SL Buff Rx10" was added for firmware version 4.001.	Default: 0 = "Encoder 0" Options: 0 = "Encoder 0" 1 = "Encoder 1" 2 = "Reserved" 3 = "Reserved" 4 = "Motor Sim" 5 = "FB Opt Port0" 6 = "FB Opt Port1" 7 = "SL DirIntRx0" 8 = "SL DirIntRx1" 9 = "SL DirIntRx2" 10 = "SL DirIntRx3" 11 = "SL Buff Rx10"			
702	**FdbkAxis FdbkVal** Present value of the selected feedback for the Motion Feedback Only Axis.	Default: 0 Min/Max: -/+2147483648		RO	32-bit Integer
703	**Motn TP Select** Selector for diagnostic Test point relating to Motion functionality.	Default: 0 = "SrvoAxisCnfgxe" Options: 0 = "SrvoAxisCnfg" 1 = "SrvoAxisUnwd" 2 = "Marker Dist" 3 = "HomeEvent X" 4 = "Watch Posit" 5 = "Home Posit" 6 = "SrvoMRP Ofst" 7 = "SrvoAct Ofst" 8 = "PositRegis1" 9 = "PositRegis2" 10 = "FdbkAxisCnfg" 11 = "FdbkAxisUnwd" 12 = "FdbkMRP Ofst" 13 = "FdbkAct Ofst" 14 = "TimeEvntStat" 15 = "CST Lower" 16 = "CST Upper" 17 = "FBonlyFbkRaw" 18 = "Reserved" 19 = "I/O Rx Seq#" 20 = "I/O Rx Msg#" 21 = 'I/O Tx Msg#" 22 = "Syn Rx Seq#" 23 = "Syn Rx Msg#" 24 = "Syn Tx Msg#" 25 = "Evt Rx Seq#" 26 = "Evt Rx Msg#" 27 = "Evt Tx Msg#" 28 = "Asy Rx Seq#" 29 = "Asy Rx Msg#" 30 = "Asy Tx Msg#" 31 = "Reset Msg#"			
704	**Motn TP Value** Data for diagnostic Test point relating to Motion functionality.	Default: 0 Min/Max: -/+2147483648		RO	32-bit Integer
705	**Motn RotaryCmmd** Position command input from the Motion Planner to the ServoAxis when configured in rotary mode.	Default: 0 Min/Max: 0/4294967295		RO	32-bit Integer
706	**MotnUnwdTurnCmmd** Position unwind turns command input from the Motion Planner to the Servo Axis when configured in rotary mode.	Default: 0 Min/Max: -/+32767		RO	16-bit Integer
707	**SrvoAxis RotFdbk** Position feedback output to the Motion Planner for the Servo Axis when configured in rotary mode.	Default: 0 Min/Max: 0/4294967295		RO	32-bit Integer
708 A	**SrvoAxisUnwdFdbk** Position unwind feedback output to the Motion Planner for the Servo Axis when configured in rotary mode.	Default: 0 Min/Max: -/+32767		RO	16-bit Integer
709	**FdbkAxis RotFdbk** Positon feedback output to the Motion Planner for the Feedback Only Axis when configured in rotary mode.	Default: 0 Min/Max: 0/4294967295		RO	32-bit Integer
710 A	**FdbkAxisUnwdFdbk** Position unwind feedback output to the Motion Planner for the Feedback Only Axis when configured in rotary mode.	Default: 0 Min/Max: -/+32767		RO	16-bit Integer
711	**MotnCnfgErrParam** Identifies a parameter that is not configured properly for a motion connection to be accepted. The parameter identified could either have a wrong value or an incorrect link. When bit 0 "Config OK" of Par 690 [Motn Cnct Status] is set, then this parameter contains the parameter number of an incorrectly configured parameter. If more than one parameter is incorrectly configured, each is displayed in turn after the previously identified parameter is fixed. If there are no configuration problems relating to Motion, then this parameter contains a value of zero and the bit 0 "Config OK" of parameter 690 [Motn Cnct Status] is cleared.	Default: 0 Min/Max: 0/65535		RO	16-bit Integer

No.	Name Description	Values	Linkable	Read-Write	Data Type

712 Write Mask Act

Status of write access for DPI ports. When bit 15 "Security" is set, network security controls the write mask instead of Par 669 [Write Mask].
Note: This parameter was added for firmware version 3.001.

Options	Security	Reserved	Reserved	Reserved	Reserved	Reserved	Reserved	Reserved	DriveLogix	Reserved	Int DPI Comm	Reserved	Aux DPI Conn	Ext DPI Conn	Local HIM	Terminal Blk
Default	0	x	x	x	x	x	x	x	0	x	0	x	0	0	0	0
Bit	15	14	13	12	11	10	9	8	7	6	5	4	3	2	1	0

0 = False
1 = True

713 Logic Mask Act

Indicates status of the logic mask for DPI ports. When bit 15 "Security" is set, network security controls the logic mask instead of Par 670 [Logic Mask].
Note: This parameter was added for firmware version 3.001.

Options	Security	Reserved	Reserved	Reserved	Reserved	Reserved	Reserved	Reserved	Reserved	Reserved	DPI Port 5	Reserved	DPI Port 3	DPI Port 2	DPI Port 1	Digital In
Default	0	x	x	x	x	x	x	x	x	x	0	x	0	0	0	0
Bit	15	14	13	12	11	10	9	8	7	6	5	4	3	2	1	0

0 = False
1 = True

714 Port Mask Act

Bits 0-5 indicate status for DPI port communication. Bit 15 "Security" indicates when security software controls the parameter.
Note: This parameter was added for firmware version 3.001.

Options	Security	Reserved	Reserved	Reserved	Reserved	Reserved	Reserved	Reserved	Reserved	Reserved	DPI Port 5	Reserved	DPI Port 3	DPI Port 2	DPI Port 1	Digital In
Default	0	x	x	x	x	x	x	x	x	x	0	x	0	0	0	0
Bit	15	14	13	12	11	10	9	8	7	6	5	4	3	2	1	0

0 = False
1 = True

717 PLL TP Select

Phase Locked Loop test point selection.
Note: This parameter was added for firmware version 3.001.

Default: 0 = "Zero"

Options:

0 = "Zero"	15 = "Vel Lpf In"
1 = "Bg Once"	16 = "Vel Lpf Out"
2 = "Position Err"	17 = "k1"
3 = "X to V"	18 = "k2"
4 = "Dt"	19 = "k3"
5 = "Gain"	20 = "pi"
6 = "Pos Intg"	21 = "Ve Enable"
7 = "Cal"	22 = "Ve In"
8 = "Epr Cal"	23 = "Ve Out"
9 = "Num"	24 = "Ve AnaPlsScl"
10 = "Denom"	25 = "Ve Whl Accum"
11 = "Egr Ratio"	26 = "Ve Frc AccmF"
12 = "A Comp"	27 = "Ve Frc AccmI"
13 = "H Comp"	28 = "Ve Dt"
14 = "Pos Lpf Out"	

718 PLL TP DataDInt

Test point integer data. This data is meaningful only if the selection at Par 717 [PLL TP Select] is integer data.
Note: This parameter was added for firmware version 3.001.

Default: 0
Min/Max: -/+2147483648

Linkable: | Read-Write: RO | Data Type: 32-bit Integer

719 PLL TP DataReal

Test point real data. This data is meaningful only if the selection at Par 717 [PLL TP Select] is not integer data.
Note: This parameter was added for firmware version 3.001.

Default: 0.0
Min/Max: -/+2200000000.0000

Linkable: | Read-Write: RO | Data Type: Real

720 PLL Control

Phase Locked Loop Control.
Bit 0 "Vel FdFwd En" - When set, enables the velocity feed forward path. When cleared, the feed forward path is disabled.
Bit 1 "Ext Vel In" - When set, enables external velocity feed forward through Par 728 [PLL Ext Spd Ref]. When cleared, velocity feed forward is derived from the input device position.
Bit 2 "Trckng AComp" - When set, provides an element of acceleration compensation to the feed forward branch. This is not recommended for use with external inputs because of increased noise.
Note: This parameter was added for firmware version 3.001.

Options	Reserved	Reserved	Reserved	Reserved	Reserved	Reserved	Reserved	Reserved	Reserved	Reserved	Reserved	Reserved	Trckng HComp	Trckng AComp	Ext Vel In	Vel FdFwd En
Default	x	x	x	x	x	x	x	x	x	x	x	x	0	0	0	0
Bit	15	14	13	12	11	10	9	8	7	6	5	4	3	2	1	0

0 = False
1 = True

No.	Name Description	Values		Linkable	Read-Write	Data Type
721	**PLL Position Ref** Physical encoder position input. This parameter is normally linked directly to the encoder position of the device chosen for input to PLL. Note: This parameter was added for firmware version 3.001.	Default: Min/Max:	0.0 -/+2147483648	Y	RW	32-bit Integer
722	**PLL BandWidth** Sets the internal bandwidth response of the PLL function in (rad/sec). The setting for very noisy mechanical systems could range from 1 to 10 (rad/s) while well-behaved high line count input devices could range upwards of 100 (rad/s). Higher bandwidths will quickly resolve tracking errors while the lower bandwidths will take longer to settle into a steady state. Some adjustment will be necessary to effect the best compromise between noise and tracking response. Note: This parameter was added for firmware version 3.001.	Default: Min/Max: Units:	20.00 0.00/8000.00 rad/s	Y	RW	Real
723	**PLL Rev Input** Revolution of the input encoder. This parameter must be coordinated with Par 724 [PLL Rev Out] to resolve the gear-ratio between input revolutions and output (virtual) revolutions. The ratio of input to output revolutions can always be resolved into integer values and should be reduced to their lowest common factor. Note: This parameter was added for firmware version 3.001.	Default: Min/Max:	1 -/+ 1000000		RW	32-bit Integer
724	**PLL Rev Output** Revolution of the output encoder. This parameter must be coordinated with Par 723 [PLL Rev In] to resolve the gear-ratio between input revolutions and output (virtual) revolutions. The ratio of input to output revolutions can always be resolved into integer values and should be reduced to their lowest common factor. Note: This parameter was added for firmware version 3.001.	Default: Min/Max:	1 1/2000000		RW	32-bit Integer
725	**PLL EPR Input** Edges Per Revolution of the physical input device. Use highest line count device possible to insure smoother PLL operation. Note: This parameter was added for firmware version 3.001.	Default: Min/Max: Units:	1048576 1/67108864 EPR		RW	32-bit Integer
726	**PLL EPR Output** Edges Per Revolution of virtual the physical output device. Note: This parameter was added for firmware version 3.001.	Default: Min/Max: Units:	1048576 1/67108864 EPR		RW	32-bit Integer
727	**PLL VirtEncdrRPM** Revolutions per minute (rpm) of the virtual output device. The value specified determines the 1 P.U. velocity at Par 734 [PLL Speed Out] and does not otherwise affect performance. Note: This parameter was added for firmware version 3.001.	Default: Min/Max: Units:	1750.0 1.0/30000.0 rpm		RW	Real
728	**PLL Ext Spd Ref** External Speed Reference. This is a velocity feed forward input. It is normally linked to an external velocity reference or the velocity output of the chosen physical encoder. Note: This parameter was added for firmware version 3.001.	Default: Min/Max: Units:	0.0 -/+2200000000.0 P.U.	Y	RW	Real
729	**PLL Ext SpdScale** External Speed Scale. This parameter is used to properly scale the velocity feed forward. Adjust for zero average at Par 733 [PLL FiltPositOut] while running at moderate speed. Note: This parameter was added for firmware version 3.001.	Default: Min/Max:	1.0 -/+2200000000.0	Y	RW	Real
730	**PLL LPFilter BW** Low Pass Filter BandWidth (BW). The filter has two functions: • Basic noise reduction of input velocity. • Timed delay of input when feed forward is linked to an external master reference other than an input encoder. The filter BW should be set for best tracking which occurs when the filter output coincides with the Loop filter output of PLL. Usually that means setting its BW to the bandwidth of the master reference drive. Note: This parameter was added for firmware version 3.001.	Default: Min/Max: Units:	50.00 0.00/8000.00 rad/s	Y	RW	Real
731	**PLL Posit Out** Phased Locked Loop position output. This signal is precisely in phase with the input physical device. A link should be made to it from the local drive auxiliary position input. (The local drive is the one implementing PLL.) Note: This parameter was added for firmware version 3.001.	Default: Min/Max:	0 -/+2147483648		RO	32-bit Integer
732	**PLL Posit OutAdv** Phased Locked Loop position advanced output. This signal is one position sample in advance of Par 731 [PLL Posit Out]. A link is normally made to this parameter from SynchLink. Note: This parameter was added for firmware version 3.001.	Default: Min/Max:	0 -/+2147483648		RO	32-bit Integer
733	**PLL FiltPositOut** Phased Locked Loop internal low pass filter output. This parameter is normally used to properly scale an external velocity reference. See description of Par 729 [PLL Ext SpdScale]. Note: This parameter was added for firmware version 3.001.	Default: Min/Max: Units:	0.0 -/+2200000000.0 P.U.	Y	RW	Real
734	**PLL Speed Out** Phased Locked Loop velocity output. This signal is used as a velocity feed forward. It is precisely in phase with the physical input device. A link should be made to it from one of the inputs on the local drive. (The local drive is the one implementing PLL.) The 1 P.U. rpm of this parameter is set by Par 727 [PLL VirtEncdrRPM]. Note: This parameter was added for firmware version 3.001.	Default: Min/Max: Units:	0.0 -/+2200000000.0 P.U.	Y	RW	Real
735	**PLL SpeedOut Adv** Phase Locked Loop velocity advanced output. This signal is one velocity reference sample in advance of Par 734 [PLL Speed Out]. A link is normally made to this parameter from SynchLink. (Velocity reference is performed in the same task as the position regulator.) Note: This parameter was added for firmware version 3.001.	Default: Min/Max: Units:	0.0 -/+2200000000.0 P.U.	Y	RW	Real

No.	Name Description	Values		Linkable	Read-Write	Data Type
737	**Posit TP Select** Enter or write a value to select position regulator data displayed in Par 738 [PositTP DataInt] and Par 739 [PositTP DataReal].	Default: Options:	0 = "Zero" 0 = "Zero" 1 = "del Xos Vout" 2 = "del Xcmd" 3 = "del Act Load" 4 = "del Act Mtr" 5 = "Integ Error" 6 = "Xprop Out" 7 = "Fdbk Sel Alt" 8 = "PreLim Xvout" 9 = "Limiter Out" 10 = "Ref EGR In" 11 = "OffsetSpdLim" 12 = "Pt-Pt SpdLim" 13 = "Sec per Edge" 14 = "Edge per Sec" 15 = "Ratio Guess" 16 = "Sync Count"			
738	**PositTP DataDInt** Displays the integer data selected by Par 737 [Posit TP Select]. This display should only be used if the selected value is Integer data.	Default: Min/Max:	0 -/+2147483648		RO	32-bit Integer
739	**PositTP DataReal** Displays the real data selected by Par 737 [Posit TP Select]. This display should only be used if the selected value is Real data.	Default: Min/Max:	0.0 -/+8.0 P.U.		RO	Real

740 Position Control

Set bits to enable various position control functions.

- Setting bit 1 "Speed Out En" enables position regulator output at Par 318 [Posit Spd Output].
- Setting bit 2 "Integ En" enables integrator operation. Resetting it resets the integrator.
- Setting bit 3 "Integ Hold" holds integrator in present state.
- Setting bit 4 "X Offset Pol" reverses polarity of offset parameters.
- Setting bit 5 "XOffset Ref" permits changing the value of position offsets without changing actual position. Resetting it makes the position offset relative to the re-referenced value or the latched value upon enable if re-reference was not performed.
- Bit 6 "AbsPositCtrl" may be set when a multi-turn, absolute feedback device is used for Point-to-Point positioning. Activating this bit will ReRef the position reference to the absolute feedback when position control is activated in bit 7 "Regulator On" of Par 741 [Position Status]. If the value at Par 758 [Pt-Pt Posit Ref] is different than the feedback in Par 763 [Position Actual], a position error will exist and the machine will move to position when activated. When bit 6 "AbsPositCtrl" is high, bit 9 "SetZeroPosit" of Par 740 [Position Control] may be used to set the zero "home" position accumulators. This can only be used when the drive is not in run and Par 740 [Position Control] bit 6 = 1 (true).
- Setting bit 7 "AbsoluteMode" puts the position regulator in Absolute mode. When using the Homing function while in Absolute mode, the value in Par 758 [Pt-Pt Posit Ref] must be set relative to the value in Par 763 [Position Actual] after homing is complete. For example: When homing is complete Par 763 [Position Actual] = 1000 counts. If you want to move to an absolute position of 2000 counts relative to the home switch, you must enter a value of 3000 counts into Par 758 [Pt-Pt Posit Ref] (i.e., 1000 + 2000 = 3000). If you want to move back to the home switch, using the same value in Par 763 [Position Actual] after homing (1000), you must enter a value of 1000 into Par 758 [Pt-Pt Position Ref] (i.e., 0 + 1000 = 1000).
- Setting bit 8 "Xzero Preset" presets Par 744 [PositRef EGR Out], Par 747 [Position Cmmd], Par 763 [Position Actual] and Par 765 [Posit Actl Load] with the value in Par 762 [Position Fdbk] minus Par 757 [Abs Posit Offset] upon drive enable.
- Setting bit 10 "Pt-Pt ReRef" enables setting or changing Par 758 [Pt-Pt Posit Ref] without changing the actual position.
- Setting bit 16 "X Watch1 En" enables position Watch 1. Resetting it clears Par 741 [Position Status] bit 8 "Posit Watch1".
- Setting bit 17 "X Watch1 Dir" causes Position Watch 1 output to be set when Par 763 [Position Actual] is greater than Par 780 [PositDtct1 Stpt]. Re-setting bit 17 causes Position Watch 1 output to be set when Par 763 [Position Actual] is less than Par 780 [PositDtct1 Stpt].
- Setting bit 18 "X Watch2 En" enables position Watch 2. Resetting it clears Par 741 [Position Status] bit 9 "Posit Watch2".
- Setting bit 19 "X Watch2 Dir" causes Position Watch 2 output to be set when Par 763 [Position Actual] is greater than Par 781 [PositDtct2 Stpt]. Re-setting bit 19 causes Position Watch 2 output to be set when Par 763 [Position Actual] is less than Par 781 [PositDtct2 Stpt].
- Setting bit 20 "Pt-Pt RampStop" enables the Ramp to Stop function for point-to-point positioning. When reset and the stop command is given during a move, the drive will stop at 0 ramp time. When set and the stop command is given during a move, the rive will ramp to zero at Par 760 [Pt-Pt Decel Time]. Note: Coast Stop or Removing Enable always causes a Coast to Stop function.
- Bit 24 "Find Home" - when this bit is on and the drive is started, a homing sequence is initiated.
- Bit 25 "Pos Redefine" - when this bit is set the position will be set to zero.
- Bit 26 "Home Dir" - when this bit is set the homing direction will be opposite of the Home Speed commanded in Par 1122 [Home Speed].
- Bit 27 "Return Home" - when this bit is set the homing direction will be opposite of the Home Speed commanded in P1122 [Home Speed]. Note: The position reference will not change, but Par 763 [Posit Load Fdbk] will return to zero. The Position reference should also be redefined to zero to synchronize the position with the command. This can be useful for returning to Home after a jog type operation
- Bit 28 "Home Switch" - when this bit is set the Homing sequence will look for the home switch to make a transition from it's current state when the homing sequence is started. Do not set with bit 29 "Home Marker".
- Bit 29 "Home Marker" - when set, the Homing Sequence will look for the Marker pulse. When the marker pulse is found the drive will decelerate and return to the position where the marker was found. Do not set with bit 28 "Home Switch".

Note: Bits 24 - 29 were added for future use - not active for use with firmware version 3.001 and above.

Options	Reserved	Reserved	Home Marker	Home Switch	Return Home	Home Dir	Pos Redefine	Find Home	Reserved	Reserved	Reserved	Pt-Pt RampStop	X Watch2 Dir	X Watch2 En	X Watch1 Dir	X Watch1 En	BscIndxStpRv	BscIndx Prst	BscIndx Rev	BscIndx Step	BscIndx Enbl	Pt-Pt ReRef	SetZeroPosit	Xzero Preset	AbsoluteMode	AbsPositCtrl	XOff ReRef	X Offset Pol	Integ Hold	Integ En	Speed Out En	Reserved
Default	x	x	0	0	0	0	0	0	x	x	x	0	1	0	1	0	0	0	0	0	0	0	0	1	0	0	0	0	0	0	1	x
Bit	31	30	29	28	27	26	25	24	23	22	21	20	19	18	17	16	15	14	13	12	11	10	9	8	7	6	5	4	3	2	1	0

0 = False
1 = True

No.	Name Description	Values	Linkable	Read-Write	Data Type
741	**Position Status** Indicates status of position control algorithms. • Bit 0 "X IGain LLim" indicates the position integrator is at the low limit. • Bit 1 "X IGain HLim" indicates the position integrator is at the high limit. • Bit 2 "X Spd LLim" indicates the position regulator output at the low limit. • Bit 3 "X Spd HLim" indicates the position regulator output is at the high limit. • Bit 4 "PtPtRRef Act" (TBD) • Bit 5 "XOffRRef Act" (TBD) • Bit 7 "Regulator On" indicates position regulator is active. • Bit 8 "Posit Watch1" indicates Position Watch 1 has detected motor position equal to its setpoint, from the proper direction. • Bit 9 "Posit Watch2" indicates Position Watch 2 has detected motor position equal to its setpoint, from the proper direction. • Bit 10 "In Position" indicates Par 769 [Position Error] is within the position deadband specified by Par 782 [In Posit BW]. • Bit 13 "HomeRequired" - Set when the "Find Home" bit is set in Par 740 [Position Control] and the drive is waiting on a Start command. • Bit 14 "Homing" - Set when the drive is running the Homing Sequence. • Bit 15 "Homed" - Set when the Homing Sequence has completed. Note: Bits 13 - 15 were added for future use - not active for use with firmware version 3.001 and above.				

Options	Reserved	Reserved	Reserved	Reserved	Reserved	Reserved	Reserved	Reserved	Reserved	Reserved	Reserved	Reserved	Reserved	Reserved	Reserved	Reserved	Homed	Homing	HomeRequired	Reserved	Posit Out En	In Position	Posit Watch2	Posit Watch1	Regulator On	Reserved	XOffRRef Act	PtPtRRef Act	X Spd HLim	X Spd LLim	X IGain HLim	X IGain LLim
Default	x	x	x	x	x	x	x	x	x	x	x	x	x	x	x	x	0	0	0	x	0	0	0	1	0	x	0	0	0	0	1	0
Bit	31	30	29	28	27	26	25	24	23	22	21	20	19	18	17	16	15	14	13	12	11	10	9	8	7	6	5	4	3	2	1	0

0 = False
1 = True

742	**Position Ref Sel** Enter a value to select the position mode and corresponding reference. Note: This parameter was changed to non-linkable for firmware version 3.001.	Default: Options:	1 = "AuxPosit Ref" 0 = "Interpolate" 2 = "Pt to Pt" 1 = "AuxPosit Ref"			
743	**Aux Posit Ref** Supplies position reference to the position regulator when selected by Par 742 [Posit Ref Sel] = 1. This input is designed to be linked to a position count accumulator such as a virtual encoder or hardware accumulator.	Default: Min/Max:	0 -/+2147483648	Y	RW	32-bit Integer
744	**PositRef EGR Out** Accumulated output of the position reference Electronic Gear Ratio (EGR). When the position regulator is not enabled, this parameter is initialized to Par 762 [Position Fdbk] or to the selected position reference as determined by Par 740 [Position Control] bit 6.	Default: Min/Max:	0 -/+2147483648		RO	32-bit Integer
745	**PositRef EGR Mul** An integer value in the numerator of the EGR function that is precision multiplied by the selected position reference. A negative value will effect a change in polarity.	Default: Min/Max:	1 -/+2000000	Y	RW	32-bit Integer
746	**PositRef EGR Div** An integer value in the denominator of the EGR function that divides into the product of the numerator and the selected position reference. Remainders are accumulated and not lost.	Default: Min/Max:	1 1/2000000	Y	RW	32-bit Integer
747	**Position Cmmd** Final accumulated command to the position regulator. When the position regulator is not enabled, this parameter is initialized to Par 762 [Position Fdbk] or to the selected position reference as determined by Par 750 [Position Control] bit 6. Thereafter, its value will reflect the result of reference and offset changes.	Default: Min/Max:	0 -/+2147483648		RO	32-bit Integer
748	**CoarsePosit Trgt** Input to the interpolator. This is a coarse position target reference.	Default: Min/Max:	0 -/+2147483648	Y	RW	32-bit Integer
749	**Interp Position** Input to the interpolator. This is a fine position target reference.	Default: Min/Max:	0 -/+2147483648		RO	32-bit Integer
750	**Coarse Spd Trgt** Input to the interpolator. This is a coarse speed target reference.	Default: Min/Max:	0 -/+2200000000.0000	Y	RW	Real
751	**Interp Speed** Output from the interpolator. This is a fine speed target reference.	Default: Min/Max:	0 -/+8.0000 P.U.		RO	Real
752	**Interp AccelRate** Output from interpolator. This is a fine acceleration rate. First derivative of Par 750 [Course Spd Trgt] if available, or zero (0) if not available.	Default: Min/Max:	0 -/+8.0000 P.U.		RO	Real
753	**Posit Offset 1** Supplies a position reference offset, which is summed after the EGR and used to phase trim position reference. A step in the offset position will be internally rate limited and added to the selected reference position. The rate of correction is set by Par 755 [Posit Offset Spd]. The initial value of this parameter is latched upon position enable without causing a change in reference. Subsequent changes to this value will be relative to the latched value. See Par 740 [Position Control], bit 5 for re-referencing the offsets.	Default: Min/Max:	0 -/+2147483648	Y	RW	32-bit Integer
754	**Posit Offset 2** Supplies another position reference offset, which is summed with Par 753 [Posit Offset 1]. Used to trim the phase of the selected position reference. Position offset will be internally rate limited to a velocity set by Par 755 [Posit Offset Spd].	Default: Min/Max:	0 -/+2147483648	Y	RW	32-bit Integer

No.	Name Description	Values		Linkable	Read-Write	Data Type
755	**Posit Offset Spd** Sets the speed of position offset. A position offset command will not exceed this speed. The actual speed of offset is limited to a maximum value of 1/(inertia x pos gain) so as not to cause a torque pulse greater than 1 per unit. The speed will change exponentially.	Default: Min/Max: Units: Scale:	176.4000 -/+14112.0000 rpm Par 4 [Motor NP RPM] = 1.0 P.U.	Y	RW	Real
756	**X Offst SpdFilt** Displays the output of a first order filter whose time response is shaped specifically to provide an output that represents the actual speed of offset correction. It may be used as a feed forward into speed reference to secure minimal position error during changes to offset.	Default: Min/Max: Units: Scale:	0.0000 -/+14112.0000 rpm Par 4 [Motor NP RPM] = 1.0 P.U.		RO	Real
757	**Abs Posit Offset** Provides an offset to absolute position. Setting Par 740 [Position Control], bit 8 "Xzero Preset" presets Par 744 [PositRef EGR Out], Par 747 [Position Cmmd], Par 763 [Position Actual] and Par 765 [Posit Actl Load] with the value in Par 762 [Position Fdbk] minus Par 757 [Abs Posit Offset] upon drive enable.	Default: Min/Max:	0 -/+2147483648	Y	RW	32-bit Integer
758	**Pt-Pt Posit Ref** Provides position reference to the point to point position regulator, when the value in Par 742 [Position Ref Sel] = 2 "Pt to Pt". The initial value is latched upon position enable without causing movement. Subsequent changes to reference are relative to the latched position unless the position is re-referenced by Par 740 [Position Control], bit 10 "Pt-Pt ReRef". Position moves may be made within the limits of plus or minus 31 bits. Point-to-point reference may be changed, and even reversed, during a move.	Default: Min/Max:	0 -/+2147483648	Y	RW	32-bit Integer
759	**Pt-Pt Accel Time** Acceleration time (sec) to base speed, active only in point to point mode. Acceleration to a relatively low speed may be exponential.	Default: Min/Max: Units:	10.0000 0.1000/6553.5000 s	Y	RW	Real
760	**Pt-Pt Decel Time** Deceleration time (sec) from base speed to zero, active only in point to point mode. Some tailing can be expected at the end of a move as the drive comes into command position. It is left to the user to select a time that does not place the drive in current or torque limit. Deceleration from relatively low speed may be exponential.	Default: Min/Max: Units:	10.0000 0.1000/6553.5000 s	Y	RW	Real
761	**Pt-Pt Filt BW** Sets the bandwidth of a low pass filter which affects smoothness at the start of deceleration in the point to point mode. A high filter bandwidth will produce a more square deceleration torque, one with a higher level of jerk. Typical values range from 5 to 100 (rad/sec). A zero value will bypass the filter. Tail-out is influenced mainly by Par 768 [Posit Reg P Gain].	Default: Min/Max: Units:	25.0000 0.0000/500.0000 rad/s	Y	RW	Real
762	**Position Fdbk** Displays the accumulated pulse count of the selected position feedback. Select a position feedback device with Par 777 [PositionFdbk Sel].	Default: Min/Max:	0 -/+2147483648		RO	32-bit Integer
763	**Position Actual** Displays the accumulated motor position as a 32-bit integer. It tracks Par 762 [Position Fdbk]. When the position regulator is not enabled, this parameter is initialized to Par 762 [Position Fdbk] or to the selected position reference as determined by Par 740 [Position Control], bit 6 "AbsPositCtrl".	Default: Min/Max:	0 -/+2147483648		RO	32-bit Integer
764	**Posit Load Fdbk** Tracks the load position, as a 32-bit integer. When a gear box connects the load to the motor, Par 766 [Posit FB EGR Mul] and Par 767 [Posit FB EGR Div] must be set to account for the gear ratio. Set Par 766 [Posit FB EGR Mul] equal to Par 767 [Posit FB EGR Div] if the load is directly connected to the motor.	Default: Min/Max:	0 -/+2147483648	Y	RW	32-bit Integer
765	**Posit Actl Load** Holds the accumulated output of the Load Gear Ratio as a 32-bit integer and forms the primary feedback for the position regulator integral channel. It is very important that the load gear ratio be precisely set such that the delta pulse count of one motor revolution equals the delta pulse count of this parameter. When the position regulator is not enabled, this parameter is initialized to Par 762 [Position Fdbk] or to the selected position reference as determined by Par 740 [Position Control], bit 6 "AbsPositCtrl".	Default: Mi/Max:	0 -/+2147483648		RO	32-bit Integer
766	**Posit FB EGR Mul** A 32-bit integer in the numerator of the load EGR function. It is multiplied by Par 764 [Posit Load Fdbk] and divided by Par 767 [Posit FB EGR Div] to reflect the load pulse count to the motor (effectively removing the gear box ratio). The accumulated position values Par 763 [Position Actual] and Par 765 [Posit Actl Load] will be equal if the ratio is set properly. There may be some difference due to lost motion in the gear train, but there should not be an accumulated difference. It is often necessary to count gear teeth as gear box manufacturers often approximate exact ratios with decimal numbers. Enter a negative value in the numerator to account for reversed motor rotation.	Default: Min/Max:	1 -/+1000000	Y	RW	32-bit Integer
767	**Posit FB EGR Div** This is a 32-bit integer that forms the denominator of the load EGR function.	Default: Min/Max:	1 1/2000000		RW	32-bit Integer
768	**PositReg P Gain** Sets position regulator gain as measured from position error to speed reference. The gain number is identically equal to position regulator bandwidth in rad/sec. For example: A gain of 10 means that a per unit position error of 0.1 sec. will effect a 1.0 P.U. speed change (1 per unit position error is the distance traveled in 1 sec. at base motor speed). The maximum value of this parameter is typically 1/3 of the speed bandwidth (rad/sec) but may be set considerably higher with careful tuning of the speed regulator output lead/lag filter.	Default: Min/Max: Units:	4.0000 0.0000/200.0000 rad/s	Y	RW	Real
769	**Position Error** Actual position error in motor pulse counts. When the position regulator is not enabled, this 32-bit integer register is initialized to zero. When the position regulator is enabled, this parameter contains the running value of position error, often referred to as "following error".	Default: Min/Max:	0 -/+2147483648		RO	32-bit Integer

No.	Name Description	Values		Linkable	Read-Write	Data Type
770	**PositReg Integ** Sets position regulator integral gain as measured from position error to velocity reference. It has gain units of (per unit velocity/sec) / (per unit position) and is unit compatible with Par 768 [PositReg P Gain]. An integral gain of 25 means that a per unit position error of 0.1 sec will effect a 2.5 P.U. speed change per sec. Note: 1 per unit position is the distance traveled in 1 sec. at base motor speed.	Default: Min/Max: Units:	4.0000 0.0000/1000.0000 $/S^2$	Y	RW	Real
771	**PositReg Droop** Position Droop limits the low frequency gain of the position regulators integral channel to a value of (1/droop). It provides a means to fine tune the stability for load mounted feedback devices where lost motion may cause a problem. Typically, position droop will have a value that is less than (1/position gain), perhaps even zero for tightly coupled loads. Position droop has a gain value of (per unit position) / (per unit speed). Note: 1 per unit position is the distance traveled in 1 sec. at base motor speed.	Default: Min/Max:	0.0000 0.0000/0.2500	Y	RW	Real
772	**XReg Integ LoLim** The negative limit of the position regulator integral gain.	Default: Min/Max: Units: Scale:	-176.4000 -14112.0000/0.0000 rpm Par 4 [Motor NP RPM] = 1.0 P.U.	Y	RW	Real
773	**XReg Integ HiLim** The positive limit of the position regulator integral gain.	Default: Min/Max: Units: Scale:	176.4000 0.0000/14112.0000 rpm Par 4 [Motor NP RPM] = 1.0 P.U.	Y	RW	Real
774	**XReg Integ Out** The output of the position regulator integral channel after application of the limits. This output is set to zero if the integral gain is set to zero or the integrator is not enabled.	Default: Min/Max: Units: Scale:	0 -/+14112.0000 rpm Par 4 [Motor NP RPM] = 1.0 P.U.		RO	Real
775	**XReg Spd LoLim** The negative speed limit of total position regulator output. Point to point mode uses this parameter to set the reverse speed reference.	Default: Min/Max: Units: Scale:	-176.4000 -14112.0000/0.0000 rpm Par 4 [Motor NP RPM] = 1.0 P.U.	Y	RW	Real
776	**XReg Spd HiLim** The positive speed limit of total position regulator output. Point to point mode uses this parameter to set the forward speed reference.	Default: Min/Max: Units: Scale:	176.4000 0.0000/14112.0000 rpm Par 4 [Motor NP RPM] = 1.0 P.U.	Y	RW	Real
777	**PositionFdbk Sel** Enter a value to select the position control feedback device. The feedback device used for position control may be an independent selection from the motor speed control feedback device in Par 222 [Mtr Fdbk Sel Pri] or Par 223 [Mtr Fdbk Sel Alt]. If the position feedback is to be the same as the motor feedback, select option 3 "Motor Fdbk". This option will set the selected feedback of Par 222 [Motor Fdbk Sel Pri] or Par 223 [Mtr Fdbk Sel Alt] as the position regulators position feedback. Notes: Options 5 and 6 are only available when compatible feedback option card is installed. This parameter was changed to non-linkable for firmware version 3.001.	Default: Options:	0 = "Encoder 0" 0 = "Encoder 0" 1 = "Encoder 1" 2 = "Reserved" 3 = "Mtr Fdbk Pri" 4 = "Motor Sim" 5 = "FB Opt Port0" 6 = "FB Opt Port1" 7 = "SL DirIntRx0" 8 = "SL DirIntRx1" 9 = "SL DirIntRx2" 10 = "SL DirIntRx3"			
778	**X Notch Attenu** Sets the depth for the Position Notch Filter. Attenuation is the ratio of the output to the input at the notch frequency. An attenuation of 30 means that the notch output is 1/30th of the input at the specified frequency. Calculation: Attenuation = Input / Output 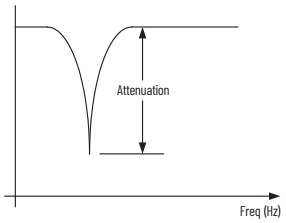 	Default: Min/Max:	50 0/500	Y	RW	Real
779	**X Notch FiltFreq** Sets the center frequency of the Position Notch Filter.	Default: Min/Max: Units:	0.0 0.0/500.0 Hz	Y	RW	Real
780	**PositDetct1 Stpt** Provides the set point for Position Watch 1. Position Watch 1 is enabled and configured with Par 740 [Position Control] bits 16 & 17. Position Watch 1 compares this value with Par 784 [Posit Dect1 In] and sets bit 8 "Posit Watch1" of Par 741 [Position Status] when the appropriate condition is satisfied.	Default: Min/Max:	0 -/+2147483648	Y	RW	32-bit Integer
781	**PositDetct2 Stpt** Provides the set point for Position Watch 2. Position Watch 2 is enabled and configured with Par 740 [Position Control] bits 18 & 19. Position Watch 2 compares this value with Par 785 [Posit Dect2 In] and sets bit 9 "Posit Watch2" of Par 741 [Position Status] when the appropriate condition is satisfied.	Default: Min/Max:	0 -/+2147483648	Y	RW	32-bit Integer
782	**In Posit BW** Sets the overall bandwidth of the In Position detector. The detector sets bit 10 "In Position" of Par 741 [Position Status], when Par 769 [Position Error] is within this bandwidth for a sufficient time, specified by Par 783 [In Posit Dwell]. A modest hysteresis count is added to the position bandwidth after the position error is within specified limits.	Default: Min/Max:	200 0/1000000	Y	RW	32-bit Integer

No.	Name Description	Values		Linkable	Read-Write	Data Type
783	**In Posit Dwell** Position error must be within the value specified by Par 782 [In Posit BW] for this amount of time before the In Position detector sets bit 10 "In Position" of Par 741 [Position Status]. A momentary out-of-position indication will reset the internal timer and clear the In Position status bit.	Default: Min/Max: Units:	0.0040 0.0000/10.0000 s	Y	RW	Real
784	**Posit Dect1 In** Provides the input variable for Position Watch 1. Position Watch 1 is enabled and configured with Par 740 [Position Control] bits 16 & 17. Position Watch 1 compares this value with Par 780 [PositDetct1 Stpt] and sets bit 8 "Posit Watch1" of Par 741 [Position Status] when the appropriate condition is satisfied. A default link connects this parameter to Par 763 [Position Actual].	Default: Min/Max:	0 -/+2147483648	Y	RW	32-bit Integer
785	**Posit Dect2 In** Provides the input variable for Position Watch 2. Position Watch 2 is enabled and configured with Par 740 [Position Control] bits 18 & 19. Position Watch 2 compares this value with Par 781 [PositDetct2 Stpt] and sets bit 9 "Posit Watch2" of Par 741 [Position Status] when the appropriate condition is satisfied. A default link connects this parameter to Par 763 [Position Actual].	Default: Min/Max:	0 -/+2147483648	Y	RW	32-bit Integer
786	**Xsync Status** Bit 0 "Sync Pulse" will go high for 0.5ms latching the Sync Generator inputs to the Sync Generator outputs. The period at which this bit is set is determined by Par 787 [Xsync Gen Period]. Note: Bit 1 was changed to "Reserved" for firmware version 2.004.					

Options	Reserved	Reserved	Reserved	Reserved	Reserved	Reserved	Reserved	Reserved	Reserved	Reserved	Reserved	Reserved	Reserved	Reserved	Reserved	Reserved	Reserved	Reserved	Reserved	Reserved	Reserved	Reserved	Reserved	Reserved	Reserved	Reserved	Reserved	Reserved	Sync Unstbl	Sync Loss	InterpInSync	Reserved	Sync Pulse
Default	x	x	x	x	x	x	x	x	x	x	x	x	x	x	x	x	x	x	x	x	x	x	x	x	x	x	x	x	0	0	0	x	0
Bit	31	30	29	28	27	26	25	24	23	22	21	20	19	18	17	16	15	14	13	12	11	10	9	8	7	6	5	4	3	2	1	0	

0 = False
1 = True

787	**Xsync Gen Period** Sets the period for the Sync Pulse Generator. Bit 0 of Par 786 [Xsync Status] will be set for 0.5 msec and will be cleared for 0.5msec x 2[Xsync Gen Period] - 0.5 msec. Note: Values 5 - "16 msec" and 6 - "32 msec" were added for firmware version 2.004.	Default: Options:	1 = "1 msec" 0 = "0.5 msec" 1 = "1 msec" 2 = "2 msec" 3 = "4 msec" 4 = "8 msec" 5 = "16 msec" 6 = "32 msec"			
788	**Xsync In 1** 32-bit integer input of the Sync Generator. Latched to Par 789 [Xsync Out 1]. Link any 32-bit integer parameter to this input parameter. Note: This parameter was changed to an unsigned integer data type and linkable to parameters that are either real or integer values for firmware version 4.001.	Default: Min/Max:	0 0/4294967295	Y	RW	32-bit Integer
789	**Xsync Out 1** Sync Generator 32-bit output register. Latched to Par 788 [Xsync In 1] every time bit 0 "Sync Pulse" of Par 786 [Xsync Status] is set. Note: This parameter was changed to an unsigned integer data type and linkable to parameters that are either real or integer values for firmware version 4.001.	Default: Min/Max:	0 0/4294967295		RO	32-bit Integer
790	**Xsync In 2** 32-bit integer input of the Sync Generator. Latched to Par 791 [Xsync Out 2]. Link any 32-bit integer parameter to this input parameter. Note: This parameter was changed to an unsigned integer data type and linkable to parameters that are either real or integer values for firmware version 4.001.	Default: Min/Max:	0 0/4294967295	Y	RW	32-bit Integer
791	**Xsync Out 2** Sync Generator 32-bit output register. Latched to Par 790 [Xsync In 2] every time bit 0 "Sync Pulse" of Par 786 [Xsync Status] is set. Note: This parameter was changed to an unsigned integer data type and linkable to parameters that are either real or integer values for firmware version 4.001.	Default: Min/Max:	0 0/4294967295		RO	32-bit Integer
792	**Xsync Out 2 Dly** Displays data of Par 791 [Xsync Out 2] from the last sync period. Note: This parameter was changed to an unsigned integer data type and linkable to parameters that are either real or integer values for firmware version 4.001.	Default: Min/Max:	0 0/4294967295		RO	32-bit Integer
793	**Xsync In 3** 32-bit integer input of the Sync Generator. Latched to Par 794 [Xsync Out 3]. Link any 32-bit integer parameter to this input parameter. Note: This parameter was changed to an unsigned integer data type and linkable to parameters that are either real or integer values for firmware version 4.001.	Default: Min/Max:	0 0/4294967295	Y	RW	32-bit Integer
794	**Xsync Out 3** Sync Generator 32-bit output register. Latched to Par 793 [Xsync In 3] every time bit 0 "Sync Pulse" of Par 786 [Xsync Status] is set. Note: This parameter was changed to an unsigned integer data type and linkable to parameters that are either real or integer values for firmware version 4.001.	Default: Min/Max:	0 0/4294967295	Y	RW	32-bit Integer
795	**Xsync Out 3 Dly** Displays data of Par 794 [Xsync Out 3] from the last sync period. Note: This parameter was changed to an unsigned integer data type and linkable to parameters that are either real or integer values for firmware version 4.001.	Default: Min/Max:	0 0/4294967295	Y	RW	32-bit Integer

No.	Name Description	Values		Linkable	Read-Write	Data Type
796	**Posit Gear Ratio** Sets the load side gear ratio for position control. Adjust this value when the selection of Par 777 [PositionFdbk Sel] is not 3 "Motor Fdbk". Calculation: Motor Encoder (Rpm) / Load Encoder (Rpm) Note: This parameter was changed to non-linkable for firmware version 3.001. This parameter was changed to be linkable for firmware version 3.004.	Default: Min/Max:	1.00 0.00/9999.00	Y	RW	Real
797	**BasicIndx Step** Sets the amount added to or subtracted from Par 799 [BasicIndx Output] on a rising edge of Par 740 [Position Control], bit 12 "BscIndx Step". Note that this value can be positive or negative.	Default: Min/Max:	0 -/+2147483648	Y	RW	32-bit Integer
798	**BasicIndx Preset** Sets the value to be moved into Par 799 [BasicIndx Output] when Par 740 [Position Control], bit 11 "BscIndx Enbl" and bit 14 "BscIndx Prst" are both on.	Default: Min/Max:	0 -/+2147483648	Y	RW	32-bit Integer
799	**BasicIndx Output** Displays the output of the Position Index function.	Default: Min/Max:	0 -/+2147483648		RO	32-bit Integer
800	**Anlg In1 Data** Displays the scaled final value for Analog Input 1.	Default: Min/Max:	0.0000 -/+2200000000.0000		RO	Real
801	**Anlg In1 Value** Displays the actual input value at Analog Input 1. Analog Input 1 may be configured for voltage or current input signal. For proper selection of the input signal, the DIP switch S-5 and Par 821 [Analog I/O Units] must be set to match. Par 801 [Anlg In1 Value] is multiplied by the value in Par 802 [Anlg In1 Scale] to produce the input to the lead lag filter function. **Type of Input:** Configurable, Voltage or Current **Polarity:** Bi-Polar **Resolution:** 14 bit (-8191 to +8191) **DIP Switch** / **Analog I/O Units** **AI 1 Voltage**: S5-2 = Open / Par 821 Bit 0 = 0 (False) **AI 1 Current**: S5-2 = Closed / Par 821 Bit 0 = 1 (True)	Default: Min/Max: Units:	0.0000 -/+20.0000 V/mA		RO	Real
802	**Anlg In1 Scale** Scales the range of Analog Input 1 to the range of Par 800 [Anlg In1 Data]. Enter the units you want per volt or mA. For example: If Par 801 [Anlg In1 Value] = 0 - 10V and you enter "6" in this parameter, Par 800 [Anlg In1 Data] will equal 0 - 60V. Par 801 x Par 802 = Par 800.	Default: Min/Max: Units:	0.1000 -/+2200000000.0000 /V or /mA	Y	RW	Real
803	**Anlg In1 Offset** Applies an offset to Analog Input 1. Use the offset to correct for zero signal errors or to create an offset to the actual input. The output of the A/D converter is summed with this parameter to produce Par 801 [Anlg In1 Value].	Default: Min/Max: Units:	0.0000 -/+20.0000 V/mA	Y	RW	Real
804	**AI 1 Filt Gain** Provides the Lead term for the Analog Input 1 filter.	Default: Min/Max:	1.0000 -/+5.0000	Y	RW	Real
805	**Anlg In1 Filt BW** Provides the Lag term for the Analog Input 1 filter. **Light** / **Heavy** Par 804 [AI 1 Filt Gain]: 0.25 / 0.1 Par 805 [Anlg In1 Filt BW]: 50 / 10	Default: Min/Max: Units:	0.0000 0.0000/3760.0000l rad/s	Y	RW	Real
806	**Anlg In2 Data** Displays the scaled final value for Analog Input 2.	Default: Min/Max:	0.0000 -/+2200000000.0000		RO	Real

No.	Name Description	Values		Linkable	Read-Write	Data Type
807	**Anlg In2 Value** Displays the actual input value at Analog Input 2. Analog Input 2 may be configured for voltage or current input signal. For proper selection of the input signal, the DIP switch S-5 and Par 821 [Analog I/O Units] must be set to match. Par 807 [Anlg In2 Value] is multiplied by Par 808 [Anlg In2 Scale] produce the input to the lead lag filter function. **Type of Input:** Configurable, Voltage or Current **Polarity:** Bi-Polar **Resolution:** 14 bit (-8191 to +8191) **DIP Switch** / **Analog I/O Units** **AI 2 Voltage**: S5-1 = Open / Par 821 Bit 1 = 0 (False) **AI 2 Current**: S5-1 = Closed / Par 821 Bit 1 = 1 (True)	Default: Min/Max: Units:	0.0000 -/+20.0000 V/mA		RO	Real
808	**Anlg In2 Scale** Scales the range of Analog Input 2 to the range of Par 806 [Anlg In2 Data]. Enter the units you want per volt or mA. For example: If Par 807 [Anlg In2 Value] = 0 - 10V and you enter "6" in this parameter, Par 806 [Anlg In2 Data] will equal 0 - 60V. Par 807 x Par 808 = Par 806.	Default: Min/Max: Units:	0.1000 -/+2200000000.0000 /V or /mA	Y	RW	Real
809	**Anlg In2 Offset** Applies an offset to Analog Input 2. Use the offset to correct for zero signal errors or to create an offset to the actual input. The output of the A/D converter is summed with this parameter to produce Par 807 [Anlg In2 Value].	Default: Min/Max: Units:	0.0000 -/+20.0000 V/mA	Y	RW	Real
810	**AI 2 Filt Gain** Provides the Lead term for the Analog Input 2 filter.	Default: Min/Max:	1.0000 -/+5.0000	Y	RW	Real
811	**Anlg In2 Filt BW** Sets the frequency for the Analog Input 2 filter. **Light** / **Heavy** Par 810 [AI 2 Filt Gain: 0.25 / 0.1 Par 811 [Anlg In2 Filt BW]: 50 / 10	Default: Min/Max: Units:	0.0000 0.0000/3760.0000 rad/s	Y	RW	Real
812	**Anlg In3 Data** Displays the scaled final value for Analog Input 3.	Default: Min/Max:	0.0000 -/+2200000000.0000		RO	Real
813	**Anlg In3 Value** Displays the actual input value at Analog Input 3. Analog Input 3 is a uni-polar voltage input only and cannot be configured for current. Type of Input = Voltage Polarity = Uni-Polar Resolution = 10 bit (0 to +1023) Note: When bit 2 "AI3 Thermstr" of Par 821 [Analog I/O Units] is set (= 1), this parameter cannot be viewed from the HIM.	Default: Min/Max: Units:	0.0000 0.0/10.0 V		RO	Real
814	**Anlg In3 Scale** Scales the raw analog input data plus the input offset (if any) to the desired data range. The scaled data for Analog Input 3 is displayed in Par 812 [Anlg In3 Data] and is available for usage in the drive. Enter the units you want per volt. For example: If Par 813 [Anlg In3 Value] = 0 - 10V and you enter "6" in this parameter, Par 812 [Anlg In3 Data] will equal 0 - 60V. Par 813 x Par 814 = Par 812. Note: When bit 2 "AI3 Thermstr" of Par 821 [Analog I/O Units] is set (= 1), this parameter cannot be viewed from the HIM.	Default: Min/Max: Units:	0.1000 -/+2200000000.0000 /V	Y	RW	Real
815	**Anlg In3 Offset** Applies an offset to Analog Input 3. Use the offset to correct for zero signal errors or to create an offset to the actual input. The output of the A/D converter is summed with this parameter to produce Par 813 [Anlg In3 Value]. Note: When bit 2 "AI3 Thermstr" of Par 821 [Analog I/O Units] is set (= 1), this parameter cannot be viewed from the HIM.	Default: Min/Max: Units:	0.0000 -/+20.0 V	Y	RW	Real
816	**AI 3 Filt Gain** Provides the Lead term for the Analog Input 3 filter. Note: When bit 2 "AI3 Thermstr" of Par 821 [Analog I/O Units] is set (= 1), this parameter cannot be viewed from the HIM.	Default: Min/Max:	1.0000 -/+5.0	Y	RW	Real

No.	Name Description	Values		Linkable	Read-Write	Data Type
817	**Anlg In3 Filt BW** Provides the Lag term for the Analog Input 3 filter. Note: When bit 2 "AI3 Thermstr" of Par 821 [Analog I/O Units] is set (= 1), this parameter cannot be viewed from the HIM.	Default: Min/Max: Units:	0.0000 0.0000/3760.0000 rad/s	Y	RW	Real

	Light	Heavy
Par 816 [AI 3 Filt Gain	0.25	0.1
Par 817 [Anlg In3 Filt BW]	50	10

821 Analog I/O Units

Use to configure the type of units (voltage or current) for the analog I/O.

- For analog input 1, configure bit 0 to match the selection of hardware switch S5-2; bit 0 set to "0" = V, or set to "1" = mA. Also, the units for Pars 801 [Anlg In1 Value], 802 [Anlg In1 Scale], and 803 [Anlg In1 Offset] will correspond to this setting.
- For analog input 2, configure bit 1 to match the selection of hardware switch S5-1; bit 1 set to "0" = V, or set to "1" = mA. Also, the units for Pars 807 [Anlg In2 Value], 808 [Anlg In2 Scale], and 809 [Anlg In2 Offset] will correspond to this setting.
- Bit 2 "AI3 Thermstr" configures analog input 3 for a thermistor input with range of 0 to 10V.
- For analog output 1, use bit 16 to configure Pars 835 [Anlg Out1 Scale], 836 [Anlg Out1 Zero], and 837 [Anlg Out1 Value] for voltage or current; bit 16 set to "0" = V, or set to "1" = mA.
- For analog output 2, use bit 17 to configure Pars 842 [Anlg Out2 Scale], 843 [Anlg Out2 Zero], and 844 [Anlg Out2 Value] for voltage or current; bit 16 set to "0" = V, or set to "1" = mA.

No hardware configuration is needed for the analog outputs.

Options	Reserved	Reserved	Reserved	Reserved	Reserved	Reserved	Reserved	Reserved	Reserved	Reserved	Reserved	Reserved	Reserved	Reserved	AO2 Current	AO1 Current	Reserved	Reserved	Reserved	Reserved	Reserved	Reserved	Reserved	Reserved	Reserved	Reserved	Reserved	Reserved	Reserved	AI3 Thermstr	AI2 Current	AI1 Current
Default	x	x	x	x	x	x	x	x	x	x	x	x	x	x	0	0	x	x	x	x	x	x	x	x	x	x	x	x	x	0	0	0
Bit	31	30	29	28	27	26	25	24	23	22	21	20	19	18	17	16	15	14	13	12	11	10	9	8	7	6	5	4	3	2	1	0

0 = False
1 = True

823 DigIn Debounce

Sets the amount of de-bounce (filtering) for each digital input. This is used to remove unwanted on/off cycling (chatter) on the digital inputs caused by relay bounce. Each digital input de-bounce is configured separately from 0.5ms to 8.0ms. The bit selections are cumulative for each digital input (1 - 6).

Example: bit 4 & 2 & 1 on = 5.5ms of de-bounce for digital input 1.

Options	Reserved	DI6 8.0ms	DI6 4.0ms	DI6 2.0ms	DI6 1.0ms	DI6 0.5ms	DI5 8.0ms	DI5 4.0ms	DI5 2.0ms	DI5 1.0ms	DI5 0.5ms	DI4 8.0ms	DI4 4.0ms	DI4 2.0ms	DI4 1.0ms	DI4 0.5ms	DI3 8.0ms	DI3 4.0ms	DI3 2.0ms	DI3 1.0ms	DI3 0.5ms	DI2 8.0ms	DI2 4.0ms	DI2 2.0ms	DI2 1.0ms	DI2 0.5ms	DI1 8.0ms	DI1 4.0ms	DI1 2.0ms	DI1 1.0ms	DI1 0.5ms	Reserved
Default	x	0	0	0	0	0	0	0	0	0	0	0	1	0	1	0	0	0	0	0	0	0	0	1	0	0	0	0	0	0	1	x
Bit	31	30	29	28	27	26	25	24	23	22	21	20	19	18	17	16	15	14	13	12	11	10	9	8	7	6	5	4	3	2	1	0

0 = False
1 = True

824 Local I/O Status

Displays the status of the local I/O.

Options	Reserved	Reserved	Reserved	Reserved	Reserved	Reserved	Reserved	Reserved	Reserved	Reserved	Reserved	Reserved	Reserved	Relay Out 3	DigOut 2	DigOut 1	SafeOffInput	Reserved	Reserved	Reserved	Reserved	Reserved	Reserved	Reserved	Reserved	DigIn 6	DigIn 5	DigIn 4	DigIn 3	DigIn 2	DigIn 1	Hw Enbl Byps
Default	x	x	x	x	x	x	x	x	x	x	x	x		0	0	0	0	x	x	x	x	x	x	x	x	0	0	0	0	0	0	0
Bit	31	30	29	28	27	26	25	24	23	22	21	20	19	18	17	16	15	14	13	12	11	10	9	8	7	6	5	4	3	2	1	0

0 = False
1 = True

No.	Name Description	Values		Linkable	Read-Write	Data Type
825	**Dig In1 Sel** Enter a value to select the function of digital input 1. Selecting options 34 "UserGen Sel0" - 37 "UserGen Sel3" sends Binary Coded Decimal (BCD) data to Par 1022 [Sel Switch Ctrl] as follows: **Selection** / **Sends Input to this bit in Par 1022** 34 "UserGen Sel0" / Bit 1 "Sel Switch 00" 35 "UserGen Sel1" / Bit 2 "Sel Switch 01" 36 "UserGen Sel2" / Bit 3 "Sel Switch 02" 37 "UserGen Sel3" / Bit 4 "Sel Switch 03" Note: For all Stop Functions: Low = Stop, High = OK to Run, In "Norm Stop-CF" Low = Normal Stop and Clear Fault. Note: When Using the MAH instruction in DriveLogix to "home" an axis and Digital Input 1 is used as the homing switch, this parameter must be set to 0 "Not Used". When the MAH instruction is executed, this parameter will be changed to option 31 "Regis 1 Ltch", to indicate that the drive registration has latched the encoder position when the switch was activated. Note: Option 38 "ExtFault Inv" was added for firmware version 2.004. Option 39 "Home Switch" was added for firmware version 3.001. Values 41 and 42 were added for firmware version 4.001. Note: Option 20 "Accel Decel2" is not functional.	Default: 0 = "Not Used" Options: 0 = "Not Used" 1 = "Enable" 2 = "Clear Faults" 3 = "Ext Fault" 4 = "Norm Stop-CF" 5 = "Start" 6 = "Reverse" 7 = "Run" 8 = "Reserved" 9 = "Reserved" 10 = "Jog 1" 11 = "Reserved" 12 = "Reserved" 13 = "Jog 2" 14 = "Normal Stop" 15 = "Spd Ref Sel0" 16 = "Spd Ref Sel1" 17 = "Spd Ref Sel2" 18 = "CurLim Stop" 19 = "Coast Stop" 20 = "Accel Decel2" 21 = "Indx Step" 22 = "Indx StepRev" 23 = "MOP Inc" 24 = "MOP Dec" 25 = "MOP Reset" 26 = "PI Trim En" 27 = "PI Trim Hold" 28 = "PI Trim Rst" 29 = "Trend Trig" 30 = "PreCharge En" 31 = "Regis 1 Ltch" 32 = "+Hrd OvrTrvl" 33 = "-Hrd OvrTrvl" 34 = "UserGen Sel0" 35 = "UserGen Sel1" 36 = "UserGen Sel2" 37 = "UserGen Sel3" 38 = "ExtFault Inv" 39 = "Home Switch" 41 = "Find Home" 42 = "Return Home"			
826	**Dig In2 Sel** Enter a value to select the function of digital input 2. Refer to Par 825 for a description of options 34 "UserGen Sel0" - 37 "UserGen Sel3". Note: For all Stop Functions: Low = Stop, High = OK to Run, In "Norm Stop-CF" Low = Normal Stop and Clear Fault. Note: Notes:Option 38 "ExtFault Inv" was added for firmware version 2.004. Option 39 "Home Switch" was added for firmware version 3.001. Values 41 and 42 were added for firmware version 4.001.	Default: 0 = "Not Used" Options: 0 = "Not Used" 1 = "Enable" 2 = "Clear Faults" 3 = "Ext Fault" 4 = "Norm Stop-CF" 5 = "Start" 6 = "Reverse" 7 = "Run" 8 = "Reserved" 9 = "Reserved" 10 = "Jog 1" 11 = "Reserved" 12 = "Reserved" 13 = "Jog 2" 14 = "Normal Stop" 15 = "Spd Ref Sel0" 16 = "Spd Ref Sel1" 17 = "Spd Ref Sel2" 18 = "CurLim Stop" 19 = "Coast Stop" 20 = "Accel Decel2" 21 = "Indx Step" 22 = "Indx StepRev" 23 = "MOP Inc" 24 = "MOP Dec" 25 = "MOP Reset" 26 = "PI Trim En" 27 = "PI Trim Hold" 28 = "PI Trim Rst" 29 = "Trend Trig" 30 = "PreCharge En" 31 = "Regis 2 Ltch" 32 = "+Hrd OvrTrvl" 33 = "-Hrd OvrTrvl" 34 = "UserGen Sel0" 35 = "UserGen Sel1" 36 = "UserGen Sel2" 37 = "UserGen Sel3" 38 = "ExtFault Inv" 39 = "Home Switch" 41 = "Find Home" 42 = "Return Home"			
827 828 829 830	**Dig In3 Sel** Enter a value to select the function of digital input 3. **Dig In4 Sel** Enter a value to select the function of digital input 4. **Dig In5 Sel** Enter a value to select the function of digital input 5. **Dig In6 Sel** Enter a value to select the function of digital input 6. Refer to Par 825 for a description of options 34 "UserGen Sel0" - 37 "UserGen Sel3". Note: For all Stop Functions: Low = Stop, High = OK to Run, In "Norm Stop-CF" Low = Normal Stop and Clear Fault. Note: Notes: Option 38 "ExtFault Inv" was added for firmware version 2.004. Option 39 "Home Switch" was added for firmware version 3.001. Values 41 and 42 were added and value 39 was deleted for firmware version 4.001. Note: (1)Opening an "Enable" input will cause the motor to coast-to-stop, ignoring any programmed Stop modes.	Default: 0 = "Not Used" Options: 0 = "Not Used" 1 = "Enable"(1) 2 = "Clear Faults" 3 = "Ext Fault" 4 = "Norm Stop-CF" 5 = "Start" 6 = "Reverse" 7 = "Run" 8 = "Reserved" 9 = "Reserved" 10 = "Jog 1" 11 = "Reserved" 12 = "Reserved" 13 = "Jog 2" 14 = "Normal Stop" 15 = "Spd Ref Sel0" 16 = "Spd Ref Sel1" 17 = "Spd Ref Sel2" 18 = "CurLim Stop" 19 = "Coast Stop" 20 = "Accel Decel2" 21 = "Indx Step" 22 = "Indx StepRev" 23 = "MOP Inc" 24 = "MOP Dec" 25 = "MOP Reset" 26 = "PI Trim En" 27 = "PI Trim Hold" 28 = "PI Trim Rst" 29 = "Trend Trig" 30 = "PreCharge En" 31 = "Reserved" 32 = "+Hrd OvrTrvl" 33 = "-Hrd OvrTrvl" 34 = "UserGen Sel0" 35 = "UserGen Sel1" 36 = "UserGen Sel2" 37 = "UserGen Sel3" 38 = "ExtFault Inv" 39 = "Reserved" 41 = "Find Home" 42 = "Return Home"			

No.	Name Description	Values	Linkable	Read-Write	Data Type
831	**Anlg Out1 Sel** Identifies the signal used on Analog Output 1. If the desired signal is not available in the selection list, choose option 0 - "User Select" and link with Par 832 [Anlg Out1 DInt] or Par 833 [Anlg Out1 Real] to select the desired parameter for output. The following table provides the parameter that corresponds to the option selected in this parameter.	Default: 17 = "Speed Fdbk" Options: 0 = "User Select" 1 = "Output Freq" 2 = "Sel Spd Ref" 3 = "Output Curr" 4 = "Trq Cur (Iq)" 5 = "% Motor Flux" 6 = "Output Power" 7 = "Output Volts" 8 = "DC Bus Volts" 9 = "PI Reference" 10 = "PI Feedback" 11 = "PI Error" 12 = "PI Output" 13 = "Reserved" 14 = "Reserved" 15 = "Motor TrqRef" 16 = "MtrTrqCurRef" 17 = "Speed Ref" 18 = "Speed Fdbk" 19 = "Torque Est" 20 = "Scl Spd Fdbk" 21 = "RampedSpdRef" 22 = "Spd Reg Out" 23 = "MOP Level" 24 = "Trend 1 DInt" 25 = "Trend 1 Real" 26 = "Trend 2 DInt" 27 = "Trend 2 Real"			

Option	Parameter	Option	Parameter
1 "Output Freq"	310 [Output Freq]	16 "MtrTrqCurRef"	305 [Mtr Trq Curr Ref]
2 "Sel Spd Ref"	40 [Selected Spd Ref]	17 "Speed Ref"	301 [Motor Speed Ref]
3 "Output Curr"	308 [Output Current]	18 "Speed Fdbk"	71 [Filtered SpdFdbk]
4 "Trq Cur (Iq)"	499 [Trq Cur Fdbk (Iq)]	19 "Torque Est"	471 [Estimated Torque]
5 "% Motor Flux"	309 [% Motor Flux]	20 "Scl Spd Fdbk"	72 [Scaled Spd Fdbk]
6 "Output Power"	311 [Output Power]	21 "RampedSpdRef"	43 [Ramped Spd Ref]
7 "Output Volts"	307 [Output Voltage]	22 "Spd Reg Out"	101 [SpdReg Integ Out]
8 "DC Bus Volts"	306 [DC Bus Voltage]	23 "MOP Level"	1090 [MOP Level Real]
9 "PI Reference"	181 [PI Reference]	24 "Trend 1 DInt"	572 [Trend Out1 DInt]
10 "PI Feedback"	182 [PI Feedback]	25 "Trend 1 Real"	573 [Trend Out1 Real]
11 "PI Error"	183 [PI Error]	26 "Trend 2 DInt"	576 [Trend Out2 DInt]
12 "PI Output"	180 [PI Output]	27 "Trend 2 Real"	577 [Trend Out2 Real]
15 "Motor TrqRef"	303 [Motor Torque Ref]		

No.	Name Description	Values	Linkable	Read-Write	Data Type
832	**Anlg Out1 DInt** Link this parameter to an integer source parameter that will control Analog Output 1.	Default: 0 Min/Max: -/+2147483648	Y	RW	32-bit Integer
833	**Anlg Out1 Real** Link this parameter to a real (floating point) source parameter that will control Analog Output 1.	Default: 0.0000 Min/Max: -/+2200000000.0000.0000	Y	RW	Real
834	**Anlg Out1 Offset** Provides an offset for Analog Output 1 before the scaling and limit blocks in the Analog Output 1 function. This parameter value is summed with either Par 832 [Anlg Out1 DInt] or Par 833 [Anlg Out1 Real] at the beginning of the function.	Default: 0.0000 Min/Max: -/+2200000000.0000	Y	RW	Real
835	**Anlg Out1 Scale** Scales the range of the source parameter to the range of Analog Output 1. For example: If Par 831 [Anlg Out1 Sel] is set to 1 "Output Freq", the output frequency of the drive is 0 - 60Hz and you enter "6" in this parameter, Par 837 [Anlg Out1 Value] = 6Hz per 1V, or 0 - 60Hz. Par 832 [Anlg Out1 DInt] or Par 833 [Anlg Out1 Real] is multiplied by this number after the limit function. Note: The turn-off point for this parameter has been changed from ±0.001 to ±0.0001 for firmware version 4.002.	Default: 0.0000 Min/Max: -/+2200000000.0000 Units: /V	Y	RW	Real
836	**Anlg Out1 Zero** Applies an offset to the scaled value of Analog Output 1. This parameter is summed with the output of the scaling block. This sum produces Par 837 [Anlg Out1 Value]. Typically this value corresponds to 0V for Analog Output 1.	Default: 0.0000 Min/Max: -/+20.0000 Units: V	Y	RW	Real
837	**Anlg Out1 Value** Displays the voltage reference for Analog Output 1 before the digital to analog conversion.	Default: 0.0000 Min/Max: -/+10.0000 Units: V		RO	Real
838	**Anlg Out2 Sel** Identifies the signal used on Analog Output 2. If the desired signal is not available in the selection list, choose option 0 - "User Select" and link with Par 839 [Anlg Out2 DInt] or Par 840 [Anlg Out2 Real] to select the desired parameter for output. Refer to Par 831 for a list of parameters that correspond to the option selected in this parameter.	Default: 3 = "Output Curr" Options: 0 = "User Select" 1 = "Output Freq" 2 = "Sel Spd Ref" 3 = "Output Curr" 4 = "Trq Cur (Iq)" 5 = "% Motor Flux" 6 = "Output Power" 7 = "Output Volts" 8 = "DC Bus Volts" 9 = "PI Reference" 10 = "PI Feedback" 11 = "PI Error" 12 = "PI Output" 13 = "Reserved" 14 = "Reserved" 15 = "Motor TrqRef" 16 = "MtrTrqCurRef" 17 = "Speed Ref" 18 = "Speed Fdbk" 19 = "Torque Est" 20 = "Scl Spd Fdbk" 21 = "RampedSpdRef" 22 = "Spd Reg Out" 23 = "MOP Level" 24 = "Trend 1 DInt" 25 = "Trend 1 Real" 26 = "Trend 2 DInt" 27 = "Trend 2 Real"			
839	**Anlg Out2 DInt** Link this parameter to an integer source parameter that will control Analog Output 2.	Default: 0 Min/Max: -/+2147483648	Y	RW	32-bit Integer
840	**Anlg Out2 Real** Link this parameter to a real (floating point) source parameter that will control Analog Output 2.	Default: 0.0000 Min/Max: -/+2200000000.0000	Y	RW	Real

No.	Name Description	Values		Linkable	Read-Write	Data Type
841	**Anlg Out2 Offset** Provides an offset for Analog Output 2 before the scaling and limit blocks in the Analog Output 2 function. This parameter value is summed with either Par 839 [Anlg Out2 DInt] or Par 840 [Anlg Out2 Real] at the beginning of the function.	Default: Min/Max:	0.0000 -/+2200000000.0000	Y	RW	Real
842	**Anlg Out2 Scale** Scales the range of the source parameter to the range of Analog Output 2. For example: If Par 838 [Anlg Out2 Sel] is set to 1 "Output Freq", the output frequency of the drive is 0 - 60Hz and you enter "6" in this parameter, Par 844 [Anlg Out2 Value] = 6Hz per 1V, or 0 - 60Hz. Par 839 [Anlg Out2 DInt] or Par 840 [Anlg Out2 Real] is multiplied by this number after the limit function. Note: The turn-off point for this parameter has been changed from ±0.001 to ±0.0001 for firmware version 4.002.	Default: Min/Max: Units:	0.0000 -/+2200000000.0000 /V	Y	RW	Real
843	**Anlg Out2 Zero** Applies an offset to the scaled value of Analog Output 2. This parameter is summed with the output of the scaling block. This sum produces Par 844 [Anlg Out2 Value]. Typically this value corresponds to 0V for Analog Output 2.	Default: Min/Max: Units:	0.0000 -/+20.0000 V	Y	RW	Real
844	**Anlg Out2 Value** Displays the voltage reference for Analog Output 2 before the digital to analog conversion.	Default: Min/Max: Units:	0.0000 -/+10.0000 V		RO	Real
845	**Dig Out1 Sel** identifies the signal used on Digital Output 1. If the desired signal is not available in the selection list, choose option 0 - "User Select" and link with Par 846 [Dig Out1 Data] and Par 847 [Dig Out1 Bit] to select the desired parameter and bit for output.	Default: Options:	3 = "Ready" 0 = "User Select" 15 = "Torque Limit" 1 = "Not Fault" 16 = "Power Limit" 2 = "Not Alarm" 17 = "Fault" 3 = "Ready" 18 = "Alarm" 4 = "Running" 19 = "Command Dir" 5 = "Reserved" 20 = "Actual Dir" 6 = "Reserved" 21 = "Jogging" 7 = "Enable On" 22 = "In Position" 8 = "Active" 23 = "Posit Watch1" 9 = "At Speed" 24 = "Posit Watch2" 10 = "At Setpt 1" 25 = "Cmpr 1 A</=B" 11 = "Above Setpt 2" 26 = "Cmpr 1 A>/=B" 12 = "At ZeroSpeed" 27 = "Cmpr 2 A</=B" 13 = "Speed Limit" 28 = "Cmpr 2 A>/=B" 14 = "CurrentLimit"			
846	**Dig Out1 Data** Link a word to this parameter that will control Digital Output 1. The bit within the selected word that will control Digital Output 1 is set by Par 847 [Dig Out1 Bit].	Default: Min: Max:	00000000000000000000000000000000 00000000000000000000000000000000 11111111111111111111111111111111	Y	RW	32-bit Boolean
847	**Dig Out1 Bit** Selects the bit, from the word linked to Par 846 [Dig Out1 Data], that will change the status of Digital Output 1 (e.g., when Par 847 [Dig Out1 Bit] equals 0, bit 0 of Par 846 [Dig Out1 Data] will control Digital Output 1).	Default: Min/Max:	0 -32/31	Y	RW	16-bit Integer
848	**Dig Out1 On Time** Defines the amount of time between a False to True transition on the output status and the corresponding change in state of Digital Output 1. If a transition on an output condition occurs and starts the time delay and the output condition returns to its original state before the delay timer reaches the setpoint, the delay timer will be aborted and the corresponding output status or digital output will not change state. Par 848 [Dig Out1 On Time] can be disabled by setting the delay time to 0 (zero). Note: This parameter was added for firmware version 3.001.	Default: Min/Max: Units:	0.00 0.00/600.00 s		RW	16-bit Integer
849	**Dig Out1 OffTime** Defines the amount of time between a True to False transition on the output status and the corresponding change in state of Digital Output 1. If a transition on an output condition occurs and starts the time delay and the output condition returns to its original state before the delay timer reaches the setpoint, the delay timer will be aborted and the corresponding output status or digital output will not change state. Note: This parameter was added for firmware version 3.001.	Default: Min/Max: Units:	0.00 0.00/600.00 s		RW	16-bit Integer
850	**Dig Out2 Sel** Identifies the signal used on Digital Output 2. If the desired signal is not available in the selection list, choose option 0 - "User Select" and link with Par 851 [Dig Out 2 Data] and Par 852 [Dig Out2 Bit] to select the desired parameter and bit for output.	Default: Options:	8 = "Active" 0 = "User Select" 15 = "Torque Limit" 1 = "Not Fault" 16 = "Power Limit" 2 = "Not Alarm" 17 = "Fault" 3 = "Ready" 18 = "Alarm" 4 = "Running" 19 = "Command Dir" 5 = "Reserved" 20 = "Actual Dir" 6 = "Reserved" 21 = "Jogging" 7 = "Enable On" 22 = "In Position" 8 = "Active" 23 = "Posit Watch1" 9 = "At Speed" 24 = "Posit Watch2" 10 = "At Setpt 1" 25 = "Cmpr 1 A</=B" 11 = "Above Setpt 2" 26 = "Cmpr 1 A>/=B" 12 = "At ZeroSpeed" 27 = "Cmpr 2 A</=B" 13 = "Speed Limit" 28 = "Cmpr 2 A>/=B" 14 = "CurrentLimit"			
851	**Dig Out2 Data** Link a word to this parameter that will control Digital Output 2. The bit within the selected word that will control Digital Output 2 is set by Par 852 [Dig Out2 Bit].	Default: Min: Max:	00000000000000000000000000000000 00000000000000000000000000000000 11111111111111111111111111111111	Y	RW	32-bit Boolean

No.	Name Description	Values		Linkable	Read-Write	Data Type
852	**Dig Out 2 Bit** Selects the bit, from the word linked to Par 851 [Dig Out 2 Data], that will change the status of Digital Output 2 (e.g., when Par 852 [Dig Out 2 Bit] equals 0, bit 0 of Par 851 [Dig Out 2 Data] will control Digital Output 2).	Default: Min/Max:	0 -32/31	Y	RW	16-bit Integer
853	**Dig Out2 On Time** Defines the amount of time between a False to True transition on the output status and the corresponding change in state of Digital Output 2. If a transition on an output condition occurs and starts the time delay and the output condition returns to its original state before the delay timer reaches the setpoint, the delay timer will be aborted and the corresponding output status or digital output will not change state. Par 853 [Dig Out2 On Time] can be disabled by setting the delay time to 0 (zero). Note: This parameter was added for firmware version 3.001.	Default: Min/Max: Units:	0.00 0.00/600.00 s		RW	16-bit Integer
854	**Dig Out2 OffTime** Defines the amount of time between a True to False transition on the output status and the corresponding change in state of Digital Output 2. If a transition on an output condition occurs and starts the time delay and the output condition returns to its original state before the delay timer reaches the setpoint, the delay timer will be aborted and the corresponding output status or digital output will not change state. Note: This parameter was added for firmware version 3.001.	Default: Min/Max: Units:	0.0 0.0/600.00 s		RW	16-bit Integer
855	**Rly Out3 Sel** Identifies the signal used on Digital Output 3. If the desired signal is not available in the selection list, choose option 0 - "User Select" and link with Par 856 [Rly Out3 Data] and Par 857 [Rly Out3 Bit] to select the desired parameter for output.	Default: Options:	1 = "Not Fault" 0 = "User Select" 1 = "Not Fault" 2 = "Not Alarm" 3 = "Ready" 4 = "Running" 5 = "Reserved" 6 = "Reserved" 7 = "Enable On" 8 = "Active" 9 = "At Speed" 10 = "At Setpt 1" 11 = "Above Setpt 2" 12 = "At ZeroSpeed" 13 = "Speed Limit" 14 = "CurrentLimit" 15 = "Torque Limit" 16 = "Power Limit" 17 = "Fault" 18 = "Alarm" 19 = "Command Dir" 20 = "Actual Dir" 21 = "Jogging" 22 = "In Position" 23 = "Posit Watch1" 24 = "Posit Watch2" 25 = "Cmpr 1 A</=B" 26 = "Cmpr 1 A>/=B" 27 = "Cmpr 2 A</=B" 28 = "Cmpr 2 A>/=B"			
856	**Rly Out3 Data** Link a word to this parameter that will control the Relay Output 3. The bit within the selected word that will control Relay Output 3 is set by Par 857 [Rly Out3 Bit].	Default: Min: Max:	00000000000000000000000000000000 00000000000000000000000000000000 11111111111111111111111111111111	Y	RW	32-bit Boolean
857	**Rly Out3 Bit** Selects the bit, from the word linked to Par 856 [Rly Out3 Data] that will change the status of the Relay Output 3 (e.g., when Par 857 [Rly Out3 Bit] equals 0, bit 0 of Par 856 [Rly Out3 Data] will control the Relay Output 3).	Default: Min/Max:	0 -32/31	Y	RW	16-bit Integer
858	**Rly Out3 On Time** Defines the amount of time between a False to True transition on the output status and the corresponding change in state of Relay Output 3. If a transition on an output condition occurs and starts the time delay and the output condition returns to its original state before the delay timer reaches the setpoint, the delay timer will be aborted and the corresponding output status or relay output will not change state. Par 858 [Rly Out3 On Time] can be disabled by setting the delay time to 0 (zero). Note: This parameter was added for firmware version 3.001.	Default: Min/Max: Units:	0.00 0.00/600.00 s		RW	16-bit Integer
859	**Rly Out3 OffTime** Defines the amount of time between a True to False transition on the output status and the corresponding change in state of Relay Output 3. If a transition on an output condition occurs and starts the time delay and the output condition returns to its original state before the delay timer reaches the setpoint, the delay timer will be aborted and the corresponding output status or relay output will not change state. Note: This parameter was added for firmware version 3.001.	Default: Min/Max: Units:	0.00 0.00/600.00 s		RW	16-bit Integer
	General BitSwap Description The six (6) Bit Swap functions are used to replace one bit in a word with one bit from a different word. This is typically done to a control word where one bit in the control word is replaced by a bit from another word such as a digital input. Four (4) input parameters and one (1) output parameter are used to accomplish each Bit Swap function. Refer to the User Functions 1 block diagram on page 190.					
860 865 870 875 880 885	**BitSwap 1A Data** **BitSwap 2A Data** **BitSwap 3A Data** **BitSwap 4A Data** **BitSwap 5A Data** **BitSwap 6A Data** This is the main word in which 1 bit will be edited. All of the data from this word except the selected bit in Par 861 [BitSwap 1A Bit] are passed to Par 864 [BitSwap 1 Result].	Default: Min/Max:	0 32 bits of data	Y	RW	32-bit Boolean
861 866 871 876 881 886	**BitSwap 1A Bit** **BitSwap 2A Bit** **BitSwap 3A Bit** **BitSwap 4A Bit** **BitSwap 5A Bit** **BitSwap 6A Bit** This parameter specifies the bit to be replaced in Par 860 [BitSwap 1A Data].	Default: Min/Max:	0 0/31		RW	16-bit Integer

No.	Name Description	Values		Linkable	Read-Write	Data Type
862 867 872 877 882 887	**BitSwap 1B Data** **BitSwap 2B Data** **BitSwap 3B Data** **BitSwap 4B Data** **BitSwap 5B Data** **BitSwap 6B Data** This parameter contains the word from which the replacement bit will be selected. Only the selected bit is passed to Par 864 [BitSwap 1 Result].	Default: Min/Max:	0 32 bits of data	Y	RW	32-bit Boolean
863 868 873 878 883 888	**BitSwap 1B Bit** **BitSwap 2B Bit** **BitSwap 3B Bit** **BitSwap 4B Bit** **BitSwap 5B Bit** **BitSwap 6B Bit** This parameter specifies the bit from Par 862 [BitSwap 1B Data] that will replace the specified bit in Par 860 [BitSwap 1A Data] and be loaded to Par 864 [BitSwap 1 Result]. A negative bit selection may be used to invert the data. Use "-32" to invert the value of bit 0.	Default: Min/Max:	0 -32/+31		RW	16-bit Integer
864 869 874 879 884 889	**BitSwap 1 Result** **BitSwap 2 Result** **BitSwap 3 Result** **BitSwap 4 Result** **BitSwap 5 Result** **BitSwap 6 Result** This parameter contains the result of the Bit Swap operation.	Default: Min/Max:	0 32 bits of data		RO	32-bit Boolean
892	**SL Comm TP Sel** Enter or write a value to select SynchLink™ data displayed by Par 893 [SL Comm TP Data].	Default: Options:	0 = "Zero" 0 = "Zero" 1 = "SL MultA Src" 2 = "SL Mult A In" 3 = "SL Mult B In" 4 = "SL Mult Out" 5 = "Rx Axis Size" 6 = "Rx Dir Size" 7 = "Rx Buf Size" 8 = "Rx Pkg Size" 9 = "Rx Seq Cnt" 10 = "Rx Index 0" 11 = "Rx Index 1" 12 = "Rx Index 2" 13 = "BufSeqErrTim" 14 = "Rx Sys Rev" 15 = "Tx Axis Size" 16 = "Tx Dir Size" 17 = "Tx Buf Size" 18 = "Tx Pkg Size" 19 = "Tx Seq Cnt" 20 = "Tx Index 0" 21 = "Tx Index 1" 22 = "Tx Index 2" 23 = "Rx Vendor ID" 24 = "Rx ModuleTyp" 25 = "Rx Serial #"			
893	**SL Comm TP Data** Displays data selected by Par 892 [SL Comm TP Sel].	Default: Min/Max:	0 -/+2147483648		RO	32-bit Integer
894 A	**SL CRC Err Accum** Displays the total accumulated number of Cycle Redundancy Check (CRC) errors. Clearing a fault resets this accumulator. This data is visible on the SynchLink diagnostics tab of the Peer Communication window. Refer to the *SynchLink System Design Guide*, publication 1756-TD008, for PowerFlex 700S SynchLink topologies, hardware and wiring details.	Default: Min/Max:	0 0/4294967296		RO	32-bit Integer
895 A	**SL CRC Error** Displays the number of CRC errors that occurred during the last test (last 8 ms). This data is visible on the SynchLink diagnostics tab of the Peer Communication window.	Default: Min/Max:	0 0/4294967296		RO	32-bit Integer
896 A	**SL BOF Err Accum** Displays the total accumulated number of Beginning of Frame (BOF) errors. Clearing a fault resets this accumulator. This data is visible on the SynchLink diagnostics tab of the Peer Communication window.	Default: Min/Max:	0 0/4294967296		RO	32-bit Integer
897 A	**SL BOF Error** Displays the number of BOF errors that occurred during the last test (last 8 ms). This data is visible on the SynchLink diagnostics tab of the Peer Communication window.	Default: Min/Max:	0 0/4294967296		RO	32-bit Integer
898 A	**SL CRC Err Limit** Identifies the number of CRC errors per test (per 8 ms) allowed before the drive declares a SynchLink CRC Error exception event. Set this limit on the SynchLink diagnostics tab of the Peer Communication window.	Default: Min/Max:	2 0/256		RW	32-bit Integer
899 A	**SL BOF Err Limit** The number of BOF errors per test (per 8 ms) allowed before the drive declares a SynchLink BOF Error exception event. Set this limit on the SynchLink diagnostics tab of the Peer Communication window.	Default: Min/Max:	2 0/256		RW	32-bit Integer
900	**SynchLink Rev** Indicates the current revision of the local SynchLink Programmable Logic firmware.	Default: Min/Max:	0.1 0.1/999.9		RO	16-bit Integer
901	**SL System Rev** Indicates the system revision of the SynchLink network. To be compatible on the network, all nodes must have the same major revision.	Default: Min/Max:	0.001 0.001/999.999		RO	32-bit Integer

No.	Name Description	Values	Linkable	Read-Write	Data Type

902
903

SL Error Status
SL Error History

Indicates the presence of SynchLink faults. This data is visible on the SynchLink diagnostics tab of the Peer Communication window.

- Bit 0 "Sync Loss" indicates SynchLink communication has failed, after it had been established.
- Bit 1 "Rx Loss" indicates the receive port is not receiving data, and the receive port configuration is set to receive data.
- Bit 2 "Many BOF Err" indicates the number of Beginning Of Frame (BOF) errors exceeds limit set by Par 899 [SL BOF Err Limit].
- Bit 3 "Many CRC Err" indicates the number of Cyclic Redundancy Check (CRC) errors exceeds limit set by Par 893 [SL CRC Err Limit].
- Bit 4 "Pckg Msg Err" indicates the received package sequence number has not matched for 1.0S.
- Bit 5 "CommForm Err" indicates the format of received data does not match the configuration of the receive port.
- Bit 6 "Sys Rev Err" indicates the system revision in the received data does not match the value of Par 900 [SynchLink Rev].
- Bit 7 "Mult TKeeper" indicates more than one node on the SynchLink system is configured as a time keeper.

Options	Reserved	Reserved	Reserved	Reserved	Reserved	Reserved	Reserved	Reserved	Mult TimeKpr	Sys Rev Err	Comm Frmt Er	Pckg Msg Err	Many CRC Err	Many BOF Err	Rx Loss	Sync Loss
Default	x	x	x	x	x	x	x	x	0	0	0	0	0	0	0	0
Bit	15	14	13	12	11	10	9	8	7	6	5	4	3	2	1	0

0 = False
1 = True

904

SL Node Cnfg

Set bits to configure the SynchLink node.

- Setting bit 0 "Time Keeper" configures the local node as the Time Master.
- Setting bit 2 "Sync Now" configures the node to synchronize with the Time Master immediately (1-2S per node) on power-up or recovery. If you do not set bit 2, the node will stay in the fast mode, taking up to 36S per node to synchronize on power-up or recovery.
- Setting bit 3 "Reset SL" resets SynchLink. This can be used to reset SynchLink after a configuration change instead of cycling the drive's power.

Note: This parameter was changed to non-linkable for firmware version 3.001.

Options	Reserved	Reserved	Reserved	Reserved	Reserved	Reserved	Reserved	Reserved	Reserved	Reserved	Reserved	Reserved	Reset SL	Sync Now	Reserved	Time Keeper
Default	x	x	x	x	x	x	x	x	x	x	x	x	0	0	x	0
Bit	15	14	13	12	11	10	9	8	7	6	5	4	3	2	1	0

0 = False
1 = True

905

SL Rx CommFormat

Defines the node's communication format for receiving SynchLink data. This determines the number of axis data, direct data and buffered data words received. Configure the format by using the Peer Communication window in the DriveExecutive™ programming software.

- Option 14 can be used to allow the drive to receive position data that can be used as a position reference.

Notes: Options 6 and 16 were added for firmware version 2.004. Option 14 was added and this parameter was changed to non-linkable for firmware version 3.001.

	Value	Axis (A)	Direct (D)	Buffered (B)
Options	0	0	0	0
	6	1	2	4
	7	0	2	18
	9	0	4	8
	14	1	3	14
	16	1	4	4
	17	0	4	18

906
907
908
909

SL Rx DirectSel0
Determines the destination for the data received at word 0 of direct received data. Configure the selection by using the Peer Communication window.

SL Rx DirectSel1
Determines the destination for the data received at word 1 of direct received data. Configure the selection by using the Peer Communication window.

SL Rx DirectSel2
Determines the destination for the data received at word 2 of direct received data. Configure the selection by using the Peer Communication window.

SL Rx DirectSel3
Determines the destination for the data received at word 3 of direct received data. Configure the selection by using the Peer Communication window.

Notes: Options 16 - 26 were added for firmware version 2.004. These parameters were changed to non-linkable for firmware version 3.001.

Default: 0 = "No Data"

Options:

0 = "No Data"	14 = "Reserved"
1 = "SL Multiply"	15 = "Reserved"
2 = "Event P0"	16 = "Reserved"
3 = "Event P1"	17 = "Reserved"
4 = "Reserved"	18 = "Reserved"
5 = "Reserved"	19 = "Reserved"
6 = "Reserved"	20 = "Reserved"
7 = "Reserved"	21 = "Dir Tx Data"
8 = "Reserved"	22 = "Dir Rx Data"
9 = "Reserved"	23 = "E0 Accum"
10 = "Event Status"	24 = "E1 Accum"
11 = "Reserved"	25 = "Opt0 Accum"
12 = "Reserved"	26 = "Opt1 Accum"
13 = "Reserved"	

No.	Name Description	Values	Linkable	Read-Write	Data Type
910	**SL Tx Comm Format** Defines the node's communication format for transmitting SynchLink data. This determines the number of axis data words, direct data words and buffered data words transmitted. Configure the format by using the Peer Communication window in the DriveExecutive™ programming software. • Value 14 can be used to allow the drive to transmit position data that can be used as a position reference. Note: Option 14 was added and this parameter was changed to non-linkable for firmware version 3.001.				

	Value	Axis (A)	Direct (D)	Buffered (B)
Options	0	0	0	0
	7	0	2	18
	9	0	4	8
	14	1	3	14
	17	0	4	18

911 912 913 914	**SL Tx DirectSel0** Determines the source type for the data transmitted by direct transmit word 0. The source type selections are: no data, event, feedback and drive parameter. **SL Tx DirectSel1** Determines the source type for the data transmitted by direct transmit word 1. The source type selections are: no data, event, feedback and drive parameter. **SL Tx DirectSel2** Determines the source type for the data transmitted by direct transmit word 2. The source type selections are: no data, event, feedback and drive parameter. **SL Tx DirectSel3** Determines the source type for the data transmitted by direct transmit word 3. The source type selections are: no data, event, feedback and drive parameter. Note: These parameters were changed to non-linkable for firmware version 3.001.	Default: 0 = "No Data" Options: 0 = "No Data" 1 = "SL Multiply" 2 = "Event P0" 3 = "Event P1" 4 = "Reserved" 5 = "Reserved" 6 = "Reserved" 7 = "Reserved" 8 = "Reserved" 9 = "Reserved" 10 = "Event Status" 11 = "Reserved" 12 = "Reserved" 13 = "Reserved" 14 = "Reserved" 15 = "Reserved" 16 = "Reserved" 17 = "Reserved" 18 = "Reserved" 19 = "Reserved" 20 = "Reserved" 21 = "Dir Tx Data" 22 = "Dir Rx Data" 23 = "E0 Accum" 24 = "E1 Accum" 25 = "Opt0 Accum" 26 = "Opt1 Accum"		

915 **SL Rcv Events**
Displays the received event status from Par 917 [SL Rx P0 Regis].

916 **SL Clr Events**
Set these bits to clear the corresponding event latches indicated in Par 915 [SL Rcv Events].

Options	Reserved	Reserved	Reserved	Reserved	Reserved	Reserved	Reserved	Reserved	Reserved	Reserved	Reserved	Reserved	Reserved	Reserved	Reserved	Reserved	Reserved	Reserved	Reserved	Reserved	Reserved	Reserved	Reserved	Reserved	Reserved	Reserved	Opt0 Regis	Reserved	Reserved	Reserved	Reserved	E1 Regis	E0 Regis
Default	x	x	x	x	x	x	x	x	x	x	x	x	x	x	x	x	x	x	x	x	x	x	x	x	x	x	0	x	x	x	x	0	0
Bit	31	30	29	28	27	26	25	24	23	22	21	20	19	18	17	16	15	14	13	12	11	10	9	8	7	6	5	4	3	2	1	0	

0 = False
1 = True

917	**SL Rx P0 Regis** Displays received port 0 registration data, if direct received data is configured to be port 0 registration data by the Rx Direct Data Selector (Parameters 905…909). Configure this selection by using the Peer Communication window.	Default: 0 Min/Max: -/+2147483648		RO	32-bit Integer
918	**SL Rx P1 Regis** Displays received port 1 registration data, if direct received data is configured to be port 1 registration data by the Rx Direct Data Selector (Parameters 905…909). Configure this selection by using the Peer Communication window.	Default: 0 Min/Max: -/+2147483648		RO	32-bit Integer
921	**SL Real2DInt In** Provides the floating point (real) input to the real to integer conversion function.	Default: 0.0000 Min/Max: -/+16.0000	Y	RW	Real
922	**SL Real2DInt Out** Displays the integer output of the real to integer conversion function. The value is the result of the formula: Par 921 [SL Real2DInt In] x Par 923 [SL Mult Base].	Default: 0 Min/Max: 0/65535		RO	16-bit Integer
923	**SL Mult Base** Specifies the base for SynchLink real to integer and integer to real conversion functions. Determines the resolution of the conversion results. You must use the same value at the transmitting node and receiving / multiplying nodes. Enter a value that will not produce an overflow - the product of this value and the inputs to the conversion and multiply functions must be less than 65,536.	Default: 10000.0000 Min/Max: 0.2000/50000.0000		RW	Real
924	**SL Mult A In** Displays the A Multiplier Input, as a floating point (real) value. This value is divided by the Par 923 [SL Mult Base]. The source of the A Multiplier is determined by the Rx Direct Data Selector (Parameters 905-909). The possible sources are: zero, Par 1054 [MulDiv 1 Mul], Par 1056 [MulDiv 1 Result], Par 1058 [MulDiv 2 Mul], or Par 1060 [MulDiv 2 Result]. The SynchLink Multiply function takes this input before it is converted to floating point.	Default: 0.0000 Min/Max: 0.0000/65535.0000		RO	Real
925	**SL Mult B In** The B Multiplier Input. This must be a floating point (real) value. The SynchLink Multiply function takes this input after it is converted to integer.	Default: 1.0000 Min/Max: 0.25000/2.0000	Y	RW	Real
926	**SL Mult Out** Displays the output of the SynchLink Multiply function as a floating point (real) value. The value is the result of the formula: Par 924 [SL Mult A In] source (integer) x Par 925 [SL Mult B In] / Par 923 [SL Mult Base] or Par 924 [SL Mult A In] x Par 925 [SL Mult B In]. Note: The SynchLink Multiply function produces an output that is always positive.	Default: 0.0000 Min/Max: 0.0000/65535.0000		RO	Real

No.	Name Description	Values	Linkable	Read-Write	Data Type

927 **SL Mult State**

Displays the status of the SynchLink Multiply function.

- Bit 0 "Local Ovflow" indicates a math overflow due to local multiply.
- Bit 1 "Rx Ovflow" indicates a math overflow in received data.
- Bit 3 "Ftol Ovflow" indicates a math overflow in the real to integer conversion function.

Options	Reserved	Reserved	Reserved	Reserved	Reserved	Reserved	Reserved	Reserved	Reserved	Reserved	Reserved	Reserved	Reserved	Reserved	Reserved	Reserved	Reserved	Reserved	Reserved	Reserved	Reserved	Reserved	Reserved	Reserved	Reserved	Reserved	Reserved	Reserved	Ftol Ovflow	Reserved	Rx Ovflow	Local Ovflow
Default	x	x	x	x	x	x	x	x	x	x	x	x	x	x	x	x	x	x	x	x	x	x	x	x	x	x	x	x	0	x	0	0
Bit	31	30	29	28	27	26	25	24	23	22	21	20	19	18	17	16	15	14	13	12	11	10	9	8	7	6	5	4	3	2	1	0

0 = False
1 = True

928 **Rx Dir Data Type**

Sets the data type for the SynchLink received direct words. If the word's bit is set the data type is floating point (real). If the bit is not set the data type is integer.

Options	Reserved	Reserved	Reserved	Reserved	Reserved	Reserved	Reserved	Reserved	Reserved	Reserved	Reserved	Reserved	Reserved	Reserved	Reserved	Reserved	Reserved	Reserved	Reserved	Reserved	Reserved	Reserved	Reserved	Reserved	Reserved	Reserved	Reserved	Reserved	SLDir03 Real	SLDir02 Real	SLDir01 Real	SLDir00 Real
Default	x	x	x	x	x	x	x	x	x	x	x	x	x	x	x	x	x	x	x	x	x	x	x	x	x	x	x	x	0	0	0	0
Bit	31	30	29	28	27	26	25	24	23	22	21	20	19	18	17	16	15	14	13	12	11	10	9	8	7	6	5	4	3	2	1	0

0 = False
1 = True

929 to **932** **SL Dir Data Rx00** to **SL Dir Data Rx03**

This is the SynchLink direct data received. See Par 928 [Rx Dir Data Type] for data type configuration.

Default:	0		RO	32-bit Integer
Min/Max:	32 bits of data			

933 **Rx Buf Data Type**

Sets the data type for the SynchLink received buffered data. If the word's bit is set the data type is floating point (real). If the bit is not set the data type is integer.

Options	Reserved	Reserved	SLBuf29 Real	SLBuf28 Real	SLBuf27 Real	SLBuf26 Real	SLBuf25 Real	SLBuf24 Real	SLBuf23 Real	SLBuf22 Real	SLBuf21 Real	SLBuf20 Real	SLBuf19 Real	SLBuf18 Real	SLBuf17 Real	SLBuf16 Real	SLBuf15 Real	SLBuf14 Real	SLBuf13 Real	SLBuf12 Real	SLBuf11 Real	SLBuf10 Real	SLBuf09 Real	SLBuf08 Real	SLBuf07 Real	SLBuf06 Real	SLBuf05 Real	SLBuf04 Real	SLBuf03 Real	SLBuf02 Real	SLBuf01 Real	SLBuf00 Real
Default	x	x	0	0	0	0	0	0	0	0	0	0	0	0	0	0	0	0	0	0	0	0	0	0	0	0	0	0	0	0	0	0
Bit	31	30	29	28	27	26	25	24	23	22	21	20	19	18	17	16	15	14	13	12	11	10	9	8	7	6	5	4	3	2	1	0

0 = False
1 = True

934 to **951** **SL Buf Data Rx00** to **SL Buf Data Rx17**

This is the SynchLink buffered data received. See Par 933 [Rx Buf Data Type] for data type configuration.

Default:	0		RO	32-bit Integer
Min/Max:	32 bits of data			

964 **Tx Dir Data Type**

Indicates the data type of each Direct Transmit word. If the word's bit is set the data type is floating point (real). If the bit is not set the data type is integer. Use the Peer Communication window to configure this selection.

Options	Reserved	Reserved	Reserved	Reserved	Reserved	Reserved	Reserved	Reserved	Reserved	Reserved	Reserved	Reserved	Reserved	Reserved	Reserved	Reserved	Reserved	Reserved	Reserved	Reserved	Reserved	Reserved	Reserved	Reserved	Reserved	Reserved	Reserved	Reserved	SLDir03 Real	SLDir02 Real	SLDir01 Real	SLDir00 Real
Default	x	x	x	x	x	x	x	x	x	x	x	x	x	x	x	x	x	x	x	x	x	x	x	x	x	x	x	x	0	0	0	0
Bit	31	30	29	28	27	26	25	24	23	22	21	20	19	18	17	16	15	14	13	12	11	10	9	8	7	6	5	4	3	2	1	0

0 = False
1 = True

965 to **968** **SL Dir Data Tx00** to **SL Dir Data Tx03**

This is the SynchLink direct data transmitted. See Par 964 [Tx Dir Data Type] for data type configuration.

Default:	0	Y	RW	32-bit Integer
Min/Max:	32 bits of data			

969 **Tx Buf Data Type**

Indicates the data type of each Buffered Transmit word. If the word's bit is set the data type is floating point (real). If the bit is not set the data type is integer. Use the Peer Communication window to configure this selection.

Options	Reserved	Reserved	SLBuf29 Real	SLBuf28 Real	SLBuf27 Real	SLBuf26 Real	SLBuf25 Real	SLBuf24 Real	SLBuf23 Real	SLBuf22 Real	SLBuf21 Real	SLBuf20 Real	SLBuf19 Real	SLBuf18 Real	SLBuf17 Real	SLBuf16 Real	SLBuf15 Real	SLBuf14 Real	SLBuf13 Real	SLBuf12 Real	SLBuf11 Real	SLBuf10 Real	SLBuf09 Real	SLBuf08 Real	SLBuf07 Real	SLBuf06 Real	SLBuf05 Real	SLBuf04 Real	SLBuf03 Real	SLBuf02 Real	SLBuf01 Real	SLBuf00 Real
Default	x	x	0	0	0	0	0	0	0	0	0	0	0	0	0	0	0	0	0	0	0	0	0	0	0	0	0	0	0	0	0	0
Bit	31	30	29	28	27	26	25	24	23	22	21	20	19	18	17	16	15	14	13	12	11	10	9	8	7	6	5	4	3	2	1	0

0 = False
1 = True

970 to **987** **SL Buf Data Tx00** to **SL Buf Data Tx17**

This is the SynchLink buffered data transmitted. See Par 969 [Tx Buf Data Type] for data type configuration.

Default:	0	Y	RO W	32-bit Integer
Min/Max:	32 bits of data			

No.	Name Description	Values	Linkable	Read-Write	Data Type

1000 **UserFunct Enable**

This parameter is used to enable and disable the optional user functions. If a bit is set the corresponding function in enabled. If the bit is not set the corresponding function is disabled and will not be processed (outputs will not be updated).

Notes: Bit 16 "Ratio Calc" was added for firmware version 2.004. Bit 5 "AddSub Math" and bit 6 "Delay Timer" were added for firmware version 3.001. Bit 7 "EGR" (Electronic Gear Ratio) was added for firmware version 4.001.

Options	Reserved	Reserved	Reserved	Reserved	Reserved	Reserved	Reserved	Reserved	Reserved	Reserved	Reserved	Reserved	Reserved	Reserved	MOP	Ratio Calc	Reserved	Reserved	Reserved	Reserved	Reserved	Reserved	Reserved	Reserved	EGR	Delay Timer	AddSub Math	MulDiv Math	Logic Functs	Converts	Sel Switches	User Params
Default	x	x	x	x	x	x	x	x	x	x	x	x	x	x	1	0	x	x	x	x	x	x	x	x	0	1	1	1	1	1	1	1
Bit	31	30	29	28	27	26	25	24	23	22	21	20	19	18	17	16	15	14	13	12	11	10	9	8	7	6	5	4	3	2	1	0

0 = False
1 = True

1001 **UserFunct Actual**

This parameter displays the actual status of the user functions. If a bit is set, then the corresponding function is active. When Par 1001 [UserFunct Actual] does not match Par 1000 [UserFunct Enable] it is an indication that the function could not activate because of an error. Typically, the limitation is caused by processor overloading. Adjust Par 146 [FW TaskTime Sel] to a slower task cycle (more time).

Options	Reserved	Reserved	Reserved	Reserved	Reserved	Reserved	Reserved	Reserved	Reserved	Reserved	Reserved	Reserved	Reserved	Reserved	MOP	Reserved	Reserved	Reserved	Reserved	Reserved	Reserved	Reserved	Reserved	Reserved	Reserved	Reserved	Reserved	MulDiv Math	Logic Functs	Converts	Sel Switches	User Params
Default	x	x	x	x	x	x	x	x	x	x	x	x	x	x	0	x	x	x	x	x	x	x	x	x	x	x	x	0	0	0	0	0
Bit	31	30	29	28	27	26	25	24	23	22	21	20	19	18	17	16	15	14	13	12	11	10	9	8	7	6	5	4	3	2	1	0

0 = False
1 = True

1002 to **1011**	**UserData DInt 01** to **UserData DInt 10** These are general purpose parameters available for storage of 32-bit enumerated data or DInt data by the user. These parameters will be retained through power cycles.	Default: Min/Max:	0 -/+2147483648	Y	RW	32-bit Integer
1012 to **1021**	**User Data Real 01** to **UserData Real 10** These are general purpose parameters available for storage of Real data by the user. These parameters will be retained through power cycles.	Default: Min/Max:	0.0000 -/+2200000000.0000	Y	RW	Real

1022 **Sel Switch Ctrl**

This is the control parameter for the switches used by the Selector Switch user functions. 16 Input Selector Switches (Pars 1029 - 1044) are controlled by bits 1-4.

- Bit 0 "SSW DataPass" Updates the output. If bit 0 is low, the output is NOT updated with the selected input.
- Bits 1 "Sel Swtch 00" - 4 "Sel Swtch 03" Binary coded selection of the 16 inputs to the switch. Bit 1 is the Least Significant Bit. If these bits are all low (set to "0"), Par 1029 is selected. If these bits are all high (set to "1") Par 1044 is selected. (Refer to Pars 1029 - 1044.) The values in these bits can be controlled by the digital inputs. (Refer to Pars 825 - 830 and to the "Selector Switches" section of the *PowerFlex 700S Drives with Phase II Control - Reference Manual*, publication PFLEX-RM003, for more information.)
- Bit 5 "SW Real 1 On" activates the Real switch. (Refer to Pars 1023 - 1025.)
- Bit 6 "SW DInt 1 On" activates the DInt switch. (Refer to Pars 1026 - 1028.)

Options	Reserved	Reserved	Reserved	Reserved	Reserved	Reserved	Reserved	Reserved	Reserved	SW DInt 1 On	SW Real 1 On	Sel Swtch 03	Sel Swtch 02	Sel Swtch 01	Sel Swtch 00	SSW DataPass
Default	x	x	x	x	x	x	x	x	x	0	0	0	0	0	0	0
Bit	15	14	13	12	11	10	9	8	7	6	5	4	3	2	1	0

0 = False
1 = True

1023	**Swtch Real 1 NC** This is the Normally Closed input to the Real switch. When Par 1022 [Sel Switch Ctrl], bit 5 "SW Real 1 On" is low, this input is updated to Par 1025 [Swtch Real 1 Output].	Default: Min/Max:	0.0000 -/+2200000000.0000	Y	RW	Real
1024	**Swtch Real 1 NO** This is the Normally Open input to the Real switch. When Par 1022 [Sel Switch Ctrl], bit 5 "SW Real 1 On" is high, this input is updated to Par 1025 [Swtch Real 1 Output].	Default: Min/Max:	0.0000 -/+2200000000.0000	Y	RW	Real
1025	**Swtch Real 1 Out** This is the result of the Real switch. The output is loaded with the selected input based on Par 1022 [Sel Switch Ctrl], bit 5 "SW Real 1 On". If this parameter does not update, check the setting of Par 1000 [UserFunct Enable], bit 1 "User Params".	Default: Min/Max:	0.0000 -/+2200000000.0000		RO	Real
1026	**Swtch DInt 1 NC** This is the Normally Closed input to the DInt switch. When Par 1022 [Sel Switch Ctrl], bit 6 "SW DInt 1 On" is low, this input is updated to Par 1028 [Swtch DInt 1 Output].	Default: Min/Max:	0.0000 -/+2200000000.0000	Y	RW	32-bit Integer
1027	**Swtch DInt 1 NO** This is the Normally Open input to the Real switch. When Par 1022 [Sel Switch Ctrl], bit 6 "SW DInt 1 On" is high, this input is updated to Par 1028 [Swtch DInt 1 Output].	Default: Min/Max:	0.0000 -/+2200000000.0000	Y	RW	32-bit Integer

No.	Name Description	Values		Linkable	Read-Write	Data Type
1028	**Swtch DInt 1 Out** This is the result of the switch. The output is loaded with the selected input based on Par 1022 [Sel Switch Ctrl], bit 6 "SW DInt 1 On". If this parameter does not update, check the setting of Par 1000 [UserFunct Enable], bit 1 "User Params".	Default: Min/Max:	0.0000 -/+2200000000.0000		RO	32-bit Integer
1029 to 1044	**Sel Swtch In00** to **Sel Swtch In15** Set these values for the inputs to the selector switch specified in Par 1022 [Sel Switch Ctrl]. All inputs are entered as Real values. You may use the output of the selector switch as either Real or DInt. A conversion is done to create the DInt value.	Default: Min/Max:	0.0000 -/+2200000000.0000	Y	RW	Real
1045	**SelSwtch Real0ut** This is the result of the selector switch. The output is loaded with the selected input based on Par 1022 [Sel Switch Ctrl], bit 0 and bits 1-4. The output is only updated when Par 1022 [Sel Switch Ctrl], bit 0 "SSW DataPass" is high. If Par 1022 [Sel Switch Ctrl], bit 0 is not high the output will not be updated to the selected input. If this parameter does not update, check the setting of Par 1000 [UserFunct Enable], bit 1 "User Params".	Default: Min/Max:	0.0000 -/+2200000000.0000		RO	Real
1046	**SelSwtch DInt0ut** This value is the value of Par 1045 [SelSwtch Real0ut] converted to a DInt value. Use this value for point to point positioning values.	Default: Min/Max:	0 -/+2147483648		RO	32-bit Integer
1047	**DInt2Real1 In** Input value for a first DInt to Real value conversion. Note: This parameter name changed from [DInt2Real In] to [DInt2Real1 In] for firmware version 3.001.	Default: Min/Max:	0 -/+2147483648	Y	RW	32-bit Integer
1048	**DInt2Real1 Scale** Input value to scale the first conversion from DInt to Real. This is a multiplication to the input value after conversion to a Real value. Note: This parameter name changed from [DInt2Real Scale] to [DInt2Real1 Scale] for firmware version 3.001.	Default: Min/Max:	0.0000 -/+2200000000.0000	Y	RW	Real
1049	**DInt2Real1Result** This is the resultant output of the first conversion form a DInt value to a Real value after scaling. Note: This parameter name changed from [DInt2RealResult] to [DInt2Real1Result] for firmware version 3.001.	Default: Min/Max:	0.0000 -/+2200000000.0000		RO	Real
1050	**Real2DInt In** Input value for Real to DInt value conversion.	Default: Min/Max:	0.0000 -/+2200000000.0000	Y	RW	Real
1051	**Real2DInt Scale** Input value to scale the conversion from Real to DInt. This is a multiplication to the input value after conversion to a DInt value.	Default: Min/Max:	0.0000 -/+2200000000.0000	Y	RW	Real
1052	**Real2DInt Result** This is the resultant output of the conversion form a Real value to a DInt value after scaling.	Default: Min/Max:	0 -/+2147483648		RO	32-bit Integer
1053	**MulDiv 1 Input** Input value to be scaled as need with the Multiplication and Division function. This input will be multiplied by Par 1054 [MulDiv 1 Mul] and then divided by Par 1055 [MulDiv 1 Div]. The result will be loaded to Par 1056 [MulDiv 1 Result]. Equation: (Par 1053 x Par 1054) / Par 1055 = Par 1056	Default: Min/Max:	0.0000 -/+2200000000.0000	Y	RW	Real
1054	**MulDiv 1 Mul** Set this value as the multiplier to the value of Par 1053 [MulDiv 1 Input]. The result will be divided by Par 1055 and loaded into Par 1056. See Par 1053.	Default: Min/Max:	0.0000 -/+2200000000.0000	Y	RW	Real
1055	**MulDiv 1 Div** Set this value as the divisor of the result of Par 1053 x Par 1054. The result will be loaded into Par 1056. See Par 1053.	Default: Min/Max:	0.0000 -/+2200000000.0000	Y	RW	Real
1056	**MulDiv 1 Result** This is the result output from the Multiplication and Division function. See Par 1053. Equation: Par 1056 = (Par 1053 x Par 1054) / Par 1055	Default: Min/Max:	0.0000 -/+2200000000.0000		RO	Real
1057	**MulDiv 2 Input** Input value to be scaled as need with the Multiplication and Division function. This input will be multiplied by Par 1058 [MulDiv 2 Mul] and then divided by Par 1059 [MulDiv 2 Div]. The result will be loaded to Par 1060 [MulDiv 2 Result]. Equation: (Par 1057 x Par 1058) / Par 1059 = Par 1060	Default: Min/Max:	0.0000 -/+2200000000.0000	Y	RW	Real
1058	**MulDiv 2 Mul** Set this value as the multiplier to the value of Par 1057 [MulDiv 2 Input]. The result will be divided by Par 1059 and loaded into Par 1060. See Par 1057.	Default: Min/Max:	0.0000 -/+2200000000.0000	Y	RW	Real
1059	**MulDiv 2 Div** Set this value as the divisor of the result of Par 1057 x Par 1058. The result will be loaded into Par 1060. See Par 1057.	Default: Min/Max:	0.0000 -/+2200000000.0000	Y	RW	Real
1060	**MulDiv 2 Result** This is the result output from the Multiplication and Division function. See Par 1057. Equation: Par 1060 = (Par 1057 x Par 1058) / Par 1059	Default: Min/Max:	0.0000 -/+2200000000.0000		RO	Real

No.	Name Description	Values	Linkable	Read-Write	Data Type

1061 Logic Config

Set this parameter to configure the logic routine in Pars 1063 - 1070. The result of this logic routine is displayed in Par 1062 [Logic/Cmpr State]. There are three configurable logic blocks as displayed below. Each block can be configured as (AND / NAND / OR / NOR / XOR / NXOR). Select the functions as desired. Multiple operation selection for one block will result in the first selection (least significant bit) being the active mode.

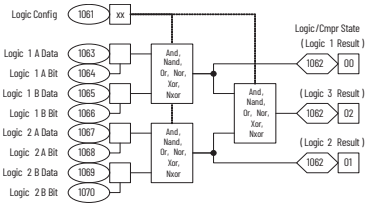

Options	Reserved	Reserved	Reserved	Reserved	Reserved	Reserved	Reserved	Reserved	Reserved	Reserved	Reserved	Reserved	Reserved	Reserved	Logic 3 NXOR	Logic 3 XOR	Logic 3 NOR	Logic 3 OR	Logic 3 NAND	Logic 3 AND	Logic 2 NXOR	Logic 2 XOR	Logic 2 NOR	Logic 2 OR	Logic 2 NAND	Logic 2 AND	Logic 1 NXOR	Logic 1 XOR	Logic 1 NOR	Logic 1 OR	Logic 1 NAND	Logic 1 AND	
Default	x	x	x	x	x	x	x	x	x	x	x	x	x	x	0	0	0	0	0	0	0	0	0	0	0	0	0	0	0	0	0	0	0 = False
Bit	31	30	29	28	27	26	25	24	23	22	21	20	19	18	17	16	15	14	13	12	11	10	9	8	7	6	5	4	3	2	1	0	1 = True

1062 Logic/Cmpr State

Displays the logical states of the Logic routine (Pars 1063 - 1070) and the results of the compare functions (Par 1071 - 1074).

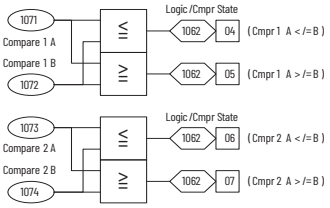

Options	Reserved	Reserved	Reserved	Reserved	Reserved	Reserved	Reserved	Reserved	Reserved	Reserved	Reserved	Reserved	Reserved	Reserved	Reserved	Reserved	Reserved	Reserved	Reserved	Reserved	Reserved	Reserved	Reserved	Reserved	Cmpr 2 A>/=B	Cmpr 2 A</=B	Cmpr 1 A>/=B	Cmpr 1 A</=B	Reserved	Logic 3 Rslt	Logic 2 Rslt	Logic 1 Rslt	
Default	x	x	x	x	x	x	x	x	x	x	x	x	x	x	x	x	x	x	x	x	x	x	x	x	0	0	0	0	0	0	0	0	0 = False
Bit	31	30	29	28	27	26	25	24	23	22	21	20	19	18	17	16	15	14	13	12	11	10	9	8	7	6	5	4	3	2	1	0	1 = True

1063	**Logic 1A Data** Selects the data word for the first input to Logic Block 1. See Par 1061 [Logic Config].	Default: Min/Max:	0 32 bits of data	Y	RW	32-bit Boolean
1064	**Logic 1A Bit** Selects the bit of Par 1063 [Logic 1A Data] for the first input to Logic Block 1. Note: To invert the selected input enter the desired bit as negative. Use -32 to invert bit 0.	Default: Min/Max:	0 -31/32		RW	16-bit Integer
1065	**Logic 1B Data** Selects the data word for the second input to Logic Block 1. See Par 1061 [Logic Config].	Default: Min/Max:	0 32 bits of data	Y	RW	32-bit Boolean
1066	**Logic 1B Bit** Selects the bit of Par 1065 [Logic 1B Data] for the second input to Logic Block 1. Note: To invert the selected input enter the desired bit as negative. Use -32 to invert bit 0.	Default: Min/Max:	0 -31/32		RW	16-bit Integer
1067	**Logic 2A Data** Selects the data word for the first input to Logic Block 2. See Par 1061 [Logic Config]	Default: Min/Max:	0 32 bits of data	Y	RW	32-bit Boolean
1068	**Logic 2A Bit** Selects the bit of Par 1067 [Logic 2A Data] for the first input to Logic Block 2. Note: To invert the selected input enter the desired bit as negative. Use -32 to invert bit 0.	Default: Min/Max:	0 -31/32		RW	16-bit Integer
1069	**Logic 2B Data** Selects the data word for the second input to Logic Block 2. See Par 1061 [Logic Config].	Default: Min/Max:	0 32 bits of data	Y	RW	32-bit Boolean
1070	**Logic 2B Bit** Selects the bit of Par 1069 [Logic 2B Data] for the second input to Logic Block 2. Note: To invert the selected input enter the desired bit as negative. Use -32 to invert bit 0.	Default: Min/Max:	0 -31/32		RW	16-bit Integer
1071	**Compare 1A** Sets input A for the Compare 1 function. The compare function allows the user to compare two values. The results of the compare are displayed in Par 1062 [Logic/Cmpr State]. Available functions are (A <= B , A >= B).	Default: Min/Max:	0.0000 -/+2200000000.0000	Y	RW	Real
1072	**Compare 1B** Sets input B for the Compare 1. The compare functions allow the user to compare two values. The results of the compare are displayed in Par 1062 [Logic/Cmpr State]. Available functions are (A <= B , A >= B).	Default: Min/Max:	0.0000 -/+2200000000.0000	Y	RW	Real

No.	Name Description	Values		Linkable	Read-Write	Data Type
1073	**Compare 2A** Sets input A for the Compare 2. The compare functions allow the user to compare two values. The results of the compare are displayed in Par 1062 [Logic/Cmpr State]. Available functions are (A <= B , A >= B).	Default: Min/Max:	0.0000 -/+2200000000.0000	Y	RW	Real
1074	**Compare 2B** Sets input B for the Compare 2. The compare functions allow the user to compare two values. The results of the compare are displayed in Par 1062 [Logic/Cmpr State]. Available functions are (A <= B , A >= B).	Default: Min/Max:	0.0000 -/+2200000000.0000	Y	RW	Real
1086	**MOP Control** Motor Operated Potentiometer (MOP) control and configuration. • Bit 0 "Increase", if set, increments the MOP level (output) from Par 1087 [MOP Rate] to Par 1088 [MOP High Limit]. • Bit 1 "Decrease", if set, decrements the MOP level (output) from Par 1087 [MOP Rate] to Par 1089 [MOP Low Limit]. • Bit 2 "Reset", if set, resets the MOP level (output) to zero and bit 0 "Increment" and bit 1 "Decrease" are inhibited. • Bit 3 "Reset @ Stop", if set, resets the MOP level (output) to zero when stop is set. • Bit 4 "Reset @ PwrLs", if set, resets the MOP level (output) to zero when power is lost. Note: If either bit 3 or bit 4 is not set, the MOP level (output) will be saved until bit 2 "Reset" is set. **Options** / Reset @ PwrLs / Reset @ Stop / Reset / Decrease / Increase **Default** 0 0 0 0 0 **Bit** 4 3 2 1 0					
1087	**MOP Rate** Sets the rate of change (increment or decrement) for the MOP. The setting 0.1/sec will equate to an increment or decrement of 0.1 for every second active. If this is used for the speed reference, that equals 10% of base speed every second for a total of 10 seconds to reach base speed reference.	Default: Min/Max: Units:	0.1000 s 0.0000/2200000000.0000 s	Y	RW	Real
1088	**MOP High Limit** Sets the upper limit for the MOP output. The MOP cannot be incremented above this level.	Default: Min/Max: Units:	1.0000 s 0.0000/2200000000.0000 s	Y	RW	Real
1089	**MOP Low Limit** Sets the lower limit for the MOP output. The MOP cannot be decremented below this level.	Default: Min/Max: Units:	-1.0000 s -2200000000.0000/0.0000 s	Y	RW	Real
1090	**MOP Level Real** Actual output value of the MOP as a real number. This value is also found in the speed reference selection. A value of 1.0 equals base motor speed.	Default: Min/Max: Units:	0.0000 -/+2200000000.0000 s		RO	Real
1091	**MOP Scale Dint** Set this value for scaling of the Dint MOP output. The MOP is calculated and controlled as a Real value MOP. Use this scaler to adjust for an integer value. Use this parameter to scale the conversion from Par 1090 [MOP Level Real] to Par 1092 [MOP Level Dint].	Default: Min/Max:	1.0000 -/+2200000000.0000	Y	RW	Real
1092	**MOP Level DInt** Actual output value of the MOP as a DInt number. This value is scaled by Par 1091 [MOP Scale DInt].	Default: Min/Max:	0.0000 -/+2147483648		RO	32-bit Integer
1093 1094 1095	**Anlg In1LossCnfg** **Anlg In2LossCnfg** **Anlg In3LossCnfg** Selects drive action when an analog input signal loss is detected. Signal loss is defined as an analog signal less than 1 V or 2 mA. The signal loss event ends and normal operation resumes when the input signal is greater than or equal to 1.5 V or 3 mA. Note: This parameter was added for firmware version 3.001.	Default: Options:	0 = "Disabled" 0 = "Disabled" 1 = "Fault" 2 = "Hold Input" 3 = "Set Input Lo" 4 = "Set Input Hi" 5 = "Goto Preset1" 6 = "Hold OutFreq"			
1096	**AddSub 1 Input** Input value to be added to and/or subtracted from as need with the Add and Subtract function. This input will be added with Par 1097 [AddSub 1 Add]. The result will be subtracted from by the value in Par 1098 [AddSub 1 Subtrct]. The result of the operation is loaded to Par 1099 [AddSub 1 Result]. Equation: Par (1096 + Par 1097) - Par 1098 = Par 1099 Note: This parameter was added for firmware version 3.001.	Default: Min/Max:	1.0000 -/+2200000000.0000	Y	RW	Real
1097	**AddSub 1 Add** This value is added to the value of Par 1096 [AddSub 1 Input]. The result will be subtracted from by Par 1098 and loaded into Par 1099. See Par 1096. Note: This parameter was added for firmware version 3.001.	Default: Min/Max:	1.0000 -/+2200000000.0000	Y	RW	Real
1098	**AddSub 1 Subtrct** This value is subtracted from the result of Par 1096 + Par 1097. The result will be loaded into Par 1099. See Par 1096. Note: This parameter was added for firmware version 3.001.	Default: Min/Max:	1.0000 -/+2200000000.0000	Y	RW	Real

No.	Name Description	Values		Linkable	Read-Write	Data Type
1099	**AddSub 1 Result** This is the result output from the Add and Subtract function. See Par 1096. Equation: Par 1099 = (Par 1096 + Par 1097) - Par 1098 Note: This parameter was added for firmware version 3.001.	Default: Min/Max:	1.0000 -/+2200000000.0000		RO	Real
1100	**AddSub 2 Input** Input value to be added to and/or subtracted from as need with the Add and Subtract function. This input will be added with Par 1101 [AddSub 2 Add]. The result will be subtracted from by the value in Par 1102 [AddSub 2 Subtrct]. The result of the operation is loaded to Par 1103 [AddSub 2 Result]. Equation: Par (1100 + Par 1101) - Par 1102 = Par 1103 Note: This parameter was added for firmware version 3.001.	Default: Min/Max:	1.0000 -/+2200000000.0000	Y	RW	Real
1101	**AddSub 2 Add** This value is added to the value of Par 1100 [AddSub 2 Input]. The result will be subtracted from by Par 1102 and loaded into Par 1103. See Par 1100. Note: This parameter was added for firmware version 3.001.	Default: Min/Max:	1.0000 -/+2200000000.0000	Y	RW	Real
1102	**AddSub 2 Subtrct** This value is subtracted from the result of Par 1100 + Par 1101. The result will be loaded into Par 1103. See Par 1100. Note: This parameter was added for firmware version 3.001.	Default: Min/Max:	1.0000 -/+2200000000.0000	Y	RW	Real
1103	**AddSub 2 Result** This is the result output from the Add and Subtract function. See Par 1100. Equation: Par 1103 = (Par 1100 + Par 1101) - Par 1102 Note: This parameter was added for firmware version 3.001.	Default: Min/Max:	1.0000 -/+2200000000.0000		RO	Real
1104	**AddSub 3 Input** Input value to be added to and/or subtracted from as need with the Add and Subtract function. This input will be added with Par 1105 [AddSub 3 Add]. The result will be subtracted from by the value in Par 1106 [AddSub 3 Subtrct]. The result of the operation is loaded to Par 1107 [AddSub 3 Result]. Equation: Par (1104 + Par 1105) - Par 1106 = Par 1107 Note: This parameter was added for firmware version 3.001.	Default: Min/Max:	1.0000 -/+2200000000.0000	Y	RW	Real
1105	**AddSub 3 Add** This value is added to the value of Par 1104 [AddSub 3 Input]. The result will be subtracted from by Par 1106 and loaded into Par 1107. See Par 1104. Note: This parameter was added for firmware version 3.001.	Default: Min/Max:	1.0000 -/+2200000000.0000	Y	RW	Real
1106	**AddSub 3 Subtrct** This value is subtracted from the result of Par 1104 + Par 1105. The result will be loaded into Par 1107. See Par 1104 Note: This parameter was added for firmware version 3.001.	Default: Min/Max:	1.0000 -/+2200000000.0000	Y	RW	Real
1107	**AddSub 3 Result** This is the result output from the Add and Subtract function. See Par 1104. Equation: Par 1107 = (Par 1104 + Par 1105) - Par 1106 Note: This parameter was added for firmware version 3.001.	Default: Min/Max:	1.0000 -/+2200000000.0000		RO	Real
1108	**DelTmr1 TrigData** Link a word to this parameter that will control a user-defined on or off delay timer. The bit within the selected word that will control the delay timer is set by Par 1109 [DelTmr1 Trig Bit]. The user-defined on/off delay timer is enabled by setting bit 6 "Delay Timer" of Par 1000 [UserFunct Enable]. 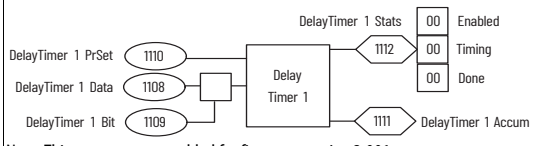 Note: This parameter was added for firmware version 3.001.	Default: Min/Max:	0 32 bits of data	Y	RW	32-bit Boolean
1109	**DelTmr1 Trig Bit** Selects the bit, from the word linked to Par 1108 [DelTmr1 TrigData], that will change the status of the user-defined delay timer to on or off. When Par 1109 [DelTmr1 Trig Bit] is a positive number, the delay timer is an "on" timer. When Par 1109 is a negative number, the delay timer is an "off" timer. Note: This parameter was added for firmware version 3.001.	Default: Min/Max:	0 -/+32		RW	16-bit Integer

No.	Name Description	Values		Linkable	Read-Write	Data Type
1110	**DelayTimer1PrSet** The time that the value in Par 1111 [DelayTimer1Accum] must reach before bit 2 "Timer Done" in Par 1112 [DelayTimer1Stats] is set. Note: This parameter was added for firmware version 3.001.	Units: Default: Min/Max:	s 0 0/600.00	Y	RW	16-bit Integer
1111	**DelayTimer1Accum** The amount of time that has elapsed since the timer was enabled (Par 1112 [DelayTimer1Stats], bit 2 set). Note: This parameter was added for firmware version 3.001.	Default: Min/Max: Units:	0 0/600.00 s		RO	16-bit Integer

1112 DelayTimer1Stats

Displays the status of the user-defined on or off delay timer.
Bit 0 "Timer Enable" when this bit is set, the timer is enabled.
Bit 1 "Timer Timing" when this bit is set, the timer is running.
Bit 2 "Timer Done" when this bit is set, the timer is done.
Note: This parameter was added for firmware version 3.001.

Options	Reserved	Reserved	Reserved	Reserved	Reserved	Reserved	Reserved	Reserved	Reserved	Reserved	Reserved	Reserved	Reserved	Timer Done	Timer Timing	Timer Enable
Default	x	x	x	x	x	x	x	x	x	x	x	x	x	0	0	0
Bit	15	14	13	12	11	10	9	8	7	6	5	4	3	2	1	0

0 = False
1 = True

1113	**DelTmr2 TrigData** Link a word to this parameter that will control a user-defined on or off delay timer. The bit within the selected word that will control the delay timer is set by Par 1114 [DelTmr2 Trig Bit]. The user-defined on/off delay timer is enabled by setting bit 6 "Delay Timer" of Par 1000 [UserFunct Enable].	Default: Min/Max:	0 32 bits of data	Y	RW	32-bit Boolean

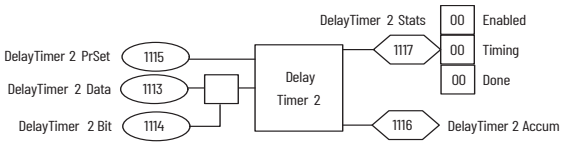

Note: This parameter was added for firmware version 3.001.

1114	**DelTmr2 Trig Bit** Selects the bit, from the word linked to Par 1113 [DelTmr2 TrigData], that will change the status of the user-defined delay timer to on or off. When Par 1114 [DelTmr2 Trig Bit] is a positive number, the delay timer is an "on" timer. When Par 1114 is a negative number, the delay timer is an "off" timer. Note: This parameter was added for firmware version 3.001.	Default: Min/Max:	0 -/+32	Y	RW	16-bit Integer
1115	**DelayTimer2PrSet** The time that the value in Par 1116 [DelayTimer2Accum] must reach before bit 2 "Timer Done" in Par 1117 [DelayTimer2Stats] is set. Note: This parameter was added for firmware version 3.001.	Default: Min/Max: Units:	0 0/60000 s	Y	RW	16-bit Integer
1116	**DelayTimer2Accum** The amount of time that has elapsed since the timer was enabled (Par 1117 [DelayTimer2Stats], bit 1 set). Note: This parameter was added for firmware version 3.001.	Default: Min/Max: Units:	0 0/60000 s		RO	16-bit Integer

1117 DelayTimer2Stats

Displays the status of the user-defined on or off delay timer.
Bit 0 "Timer Enable" when this bit is set, the timer is enabled.
Bit 1 "Timer Timing" when this bit is set, the timer is running.
Bit 2 "Timer Done" when this bit is set, the timer is done.
Note: This parameter was added for firmware version 3.001.

Options	Reserved	Reserved	Reserved	Reserved	Reserved	Reserved	Reserved	Reserved	Reserved	Reserved	Reserved	Reserved	Reserved	Timer Done	Timer Timing	Timer Enable
Default	x	x	x	x	x	x	x	x	x	x	x	x	x	0	0	0
Bit	15	14	13	12	11	10	9	8	7	6	5	4	3	2	1	0

0 = False
1 = True

1120 A	**Home Accel Time** Acceleration rate when Homing. Note: This parameter was added for firmware version 3.001.	Default: Min/Max: Units:	10.00 0.01/6553.50 s	Y	RW	Real
1121 A	**Home Decel Time** Deceleration rate when Homing. Note: This parameter was added for firmware version 3.001.	Default: Min/Max: Units:	10.00 0.01/6553.50 s	Y	RW	Real
1122 A	**Home Speed** Speed reference used when Homing. Notes: This parameter was added for firmware version 3.001. The default value was changed from "0.000" to "0.005" for firmware version 4.001.	Default: Min/Max: Units:	0.005 -/+ 8.000 rpm	Y	RW	Real

No.	Name Description	Values		Linkable	Read-Write	Data Type
1123	**Home Position** User-defined Home position. After the Homing function is completed, the following parameters are updated with the value of Par 1123: Par 744 [PositRef EGR Out], Par 747 [Position Cmmd], Par 763 [Position Actual] and Par 765 [Posit Actl Load]. Note: This parameter was added for firmware version 3.001. This parameter was activated for firmware version 4.001.	Default: Min/Max:	0 -/+ 2147483648	Y	RW	32-bit Integer
1124	**Home Actual Pos** Actual home position after the Homing function is complete. The value in this parameter displays the raw position feedback data at home position. Note: This parameter was added for firmware version 4.001.	Default: Min/Max:	0 -/+ 2147483648		RO	32-bit Integer
1125	**DC Brake Level** Defines the DC brake current level injected into the motor when "DC Brake" is selected as a stop mode. This also sets the braking current level when "Fast Stop" is selected. The DC braking voltage used in this function is created by a PWM algorithm and may not generate the smooth holding force needed for some applications. Refer to the PowerFlex 700S with Phase II Control Reference Manual, publication PFLEX-RM003. Notes: This parameter was added for firmware version 3.001, but is not functional (for future use). The maximum value was changed from 1170.0 to 3000.0 for firmware version 4.002.	Default: Min/Max: Units:	0.0 0.0/3000.0 V	Y	RW	Real

ATTENTION: If a hazard of injury due to movement of equipment or material exists, an auxiliary mechanical braking device must be used. This feature should not be used with synchronous or permanent magnet motors. Motors may be demagnetized during braking.

1126	**DC Brake Time** Sets the amount of time DC brake current is "injected" into the motor. Note: This parameter was added for firmware version 3.001, but is not functional (for future use).	Default: Min/Max: Units:	0.0 0.0/655.0 s	Y	RW	Real
1130	**PPMP Pos Command** Sets the position reference for the Motion Planner. The units are counts. Note: This parameter was added for firmware version 3.001.	Default: Min/Max:	0 -/+ 2147483648	Y	RW	32-bit Integer
1131	**PPMP Pos Mul** Part of the input scale block. Set this value as the multiplier to the value of Par 1130 [PPMP Pos Command]. Also see Par 1132 [PPMP Pos Div]. The scale block is enabled by setting bit 4 of Par 1134 [PPMP Control]. The the intermediate product must be < 31 bits. Note: This parameter was added for firmware version 3.001.	Default: Min/Max:	1 1/2000000	Y	RW	32-bit Integer
1132	**PPMP Pos Div** Part of input scale block. Set this value as the divisor of the product of Par 1130 [PPMP Pos Command] and Par 1131 [PPMP Pos Mul]. Integer math applies. The scale block is enabled by setting bit 4 of Par 1134 [PPMP Control]. Note: This parameter was added for firmware version 3.001.	Default: Min/Max:	1 1/2000000	Y	RW	32-bit Integer
1133	**PPMP Scaled Cmd** Indicates the result of integer scaling of the position reference for the Motion planner or the Position loop. The units are counts. Note: This parameter was added for firmware version 3.001.	Default: Min/Max:	0 -/+ 2147483648		RO	32-bit Integer

1134 PPMP Control

Establishes the operating condition for the Motion Planner. The operating mode(s) is selected if the corresponding bit is set.

Bit 0 "Absolute" Absolute mode. When using the Homing function while in Absolute mode, the value in Par 758 [Pt-Pt Posit Ref] must be set relative to the value in Par 763 [Position Actual] after homing is complete. For example: When homing is complete Par 763 [Position Actual] = 1000 counts. If you want to move to an absolute position of 2000 counts relative to the home switch, you must enter a value of 3000 counts into Par 758 [Pt-Pt Posit Ref] (i.e., 1000 + 2000 = 3000). If you want to move back to the home switch, using the same value in Par 763 [Position Actual] after homing (1000), you must enter a value of 1000 into Par 758 [Pt-Pt Position Ref] (i.e., 0 + 1000 = 1000).

- Bit 1 "Incremental" Incremental mode
- Bit 2 "Start" Start
- Bit 4 "Scaling En" Scaling enabled
- Bit 5 "Over Ride En" Override enabled
- Bit 6 "S Curve En" S Curve Enabled
- Bit 7 "Cond Hold" Conditional Hold
- Bit 8 "Pause" Pause
- Bit 9 "Re-Synch" Re-Synch

Note: This parameter was added for firmware version 3.001.

Options	Reserved	Reserved	Reserved	Reserved	Reserved	Reserved	Re-Synch	Pause	Cond Hold	S Curve En	Over Ride En	Scaling En	Reserved	Start	Incremental	Absolute
Default	x	x	x	x	x	x	0	0	0	0	0	0	x	0	0	0
Bit	15	14	13	12	11	10	9	8	7	6	5	4	3	2	1	0

0 = False
1 = True

No.	Name Description	Values		Linkable	Read-Write	Data Type
1135	**PPMP Status** Displays the current operating status of the Motion Planner. Note: This parameter was added for firmware version 3.001.					

Options	Reserved	Reserved	Reserved	Running	Done	Zero Speed	Re-Synch	Pause	Cond Hold	S Curve En	Over Ride En	Scaling En	Reserved	Start	Incremental	Absolute
Default	x	x	x	0	0	0	0	0	0	0	0	0	x	0	0	0
Bit	15	14	13	12	11	10	9	8	7	6	5	4	3	2	1	0

0 = False
1 = True

No.	Name Description	Values		Linkable	Read-Write	Data Type
1136	**PPMP Rev Spd Lim** Sets the maximum reverse speed reference limit. Notes: This parameter was added for firmware version 3.001. Changed the default value and made the parameter linkable for firmware version 4.001.	Default: Min/Max: Units:	-0.5 -/+ 8.0 rpm	Y	RW	Real
1137	**PPMP Fwd Spd Lim** Sets the maximum forward speed reference limit. Note: This parameter was added for firmware version 3.001. Changed the default value and made the parameter linkable for firmware version 4.001.	Default: Min/Max: Units:	+0.5 -/+ 8.0 rpm	Y	RW	Real
1138	**PPMP Over Ride** Multiplies both forward (Par 1136 [PPMP Rev Spd Lim]) and reverse (Par 1137 [PPMP Fwd Spd Lim]) speed limits by this value. Note: This parameter was added for firmware version 3.001. Changed the default value, minimum value and made the parameter linkable for firmware version 4.001.	Default: Min/Max:	1.0 0.0/1.5	Y	RW	Real
1139	**PPMP Accel Time** Sets the ramp time for acceleration (time to go from zero to full speed). Note: This parameter was added for firmware version 3.001.	Default: Min/Max: Units:	10.00 0.01/6553.50 s	Y	RW	Real
1140	**PPMP Decel Time** Sets the ramp time for deceleration (time to go from full speed to zero speed). Note: This parameter was added for firmware version 3.001.	Default: Min/Max: Units:	10.00 0.01/6553.50 s	Y	RW	Real
1141	**PPMP SCurve Time** Sets the amount of time that is applied to the S Curve. Half of the time specified is added at the beginning and half end of the acceleration and deceleration ramp. Note: This parameter was added for firmware version 3.001.	Default: Min/Max: Units:	0.05 0.00/4.00 s	Y	RW	Real
1142	**PPMP Spd Output** Provides a speed reference output from the Motion Planner. Typically this parameter would be used by the drives speed loop. A link could be made from a velocity reference input to this parameter. Note: This parameter was added for firmware version 3.001.	Default: Min/Max: Units:	0.0 -/+ 8.0 rpm		RO	Real
1143	**PPMP Pos Output** Provides a position reference output from the Motion Planner. This output is scaled in counts. Typically this parameter would be used by the drive's Position Loop. A link could be made from auxiliary position input to this parameter. Note: This parameter was added for firmware version 3.001.	Default: Min/Max:	0.0 -/+ 2147483648.0		RO	Real
1144	**PPMP Pos To Go** Provides indication of feedback counts remaining in the move. Note: This parameter was added for firmware version 3.001.	Default: Min/Max:	0.0 -/+ 2147483648.0		RO	Real
1145	**PPMP TP Select** Motion Planner test point selection. Notes: This parameter was added for firmware version 3.001. Selection 9 was changed to "Reserved" for firmware version 4.001.	Default: Options:	0 = "Zero" 0 = "Zero" 1 = "MP FrctAccml" 2 = "MP WholeAccm" 3 = "MP EPR" 4 = "MP NBase" 5 = "MP Once Flag" 6 = "MP Pos Fdbk" 7 = "MP Pos Fdbk1" 8 = "MP ErrorSum" 9 = "Reserved" 10 = "MP IntegHold" 11 = "MP Pos Exact" 12 = "MP Pos Diff" 13 = "MP One Shot" 14 = "MP Run Delay" 15 = "MP ResyncOne" 16 = "MP Task Time" 17 = "MP Mtn Calc" 18 = "MP AnlgPulse" 19 = "MP Rate In" 20 = "MP Rate Out" 21 = "MP Gain" 22 = "MP Kx" 23 = "MP FrctAccmR" 24 = "MP AccelRate" 25 = "MP DecelRate" 26 = "MP Cal" 27 = "SC Sum" 28 = "SC Index" 29 = "SC ArraySize" 30 = "SC Once" 31 = "SC Enable" 32 = "SC Ipos"			
1146	**PPMP TP DataDInt** Test point integer data. This data is meaningful only if the selection at Par 1145 [PPMP TP Select] is integer data. Note: This parameter was added for firmware version 3.001.	Default: Min/Max:	0.0 -/+ 2147483648.0		RO	32-bit Integer
1147	**PPMP TP DataReal** Test point real data. This data is meaningful only if the selection at Par 1145 [PPMP TP Select] is not integer data. Note: This parameter was added for firmware version 3.001.	Default: Min/Max:	0.0 -/+2200000000.0		RO	Real

No.	Name Description	Values		Linkable	Read-Write	Data Type
1150	**DInt2Real2 In** Input value for a second DInt to Real value conversion. Note: This parameter was added for firmware version 3.001.	Default: Min/Max:	0 -/+2147483648.0	Y	RW	32-bit Integer
1151	**DInt2Real2 Scale** Input value to scale the second conversion from DInt to Real. This is a multiplication to the input value after conversion to a Real value. Note: This parameter was added for firmware version 3.001.	Default: Min/Max:	0.0 -/+2200000000.0	Y	RW	Real
1152	**DInt2Real2Result** This is the resultant output of the second conversion form a DInt value to a Real value after scaling. Note: This parameter was added for firmware version 3.001.	Default: Min/Max:	0.0 -/+2200000000.0		RO	Real
1155	**Heidn VM Pos Ref** Virtual Master position reference for the Heidenhain option card. This value is used by the Virtual Master function as a position reference. This parameter can be linked to a position reference source, such as Par 1160 [VirtEncPositFast]. Note: This parameter was added for firmware version 4.001.	Default: Min/Max:	0.0 -/+2147483648.0	Y	RW	32-bit Integer
1156	**Heidn VM Enc PPR** Virtual Master Encoder Pulse per Revolution (PPR). This value defines the encoder PPR for the Virtual Master function. The Heidenhain option card produces the encoder pulse according to this PPR value, which is limited to 1024 or 2048 encoder lines. Note: This parameter was added for firmware version 4.001.	Default: Min/Max: Units:	1024 1024 and 2048 only PPR		RW	32-bit Integer
1160	**VirtEncPositFast** Virtual Encoder position output in Task 1. One of three outputs from the Virtual Encoder function. This value is the encoder position reference output for Task1 (fast rate). Par 62 [Virt Encdr Posit] and Par 63 [Virt Encdr Dlyed] are the encoder position output in Task 2. For the Virtual Master Encoder function, you must use Par 1160 [VirEncPosiFast] as the position reference updated in Task 1. Note: This parameter was added for firmware version 4.001.	Default: Min/Max:	0.0 -/+2147483648.0		RO	32-bit Integer
1161	**EGR Config** Configuration for the Electrical Gear Ratio (EGR) user function. Setting bit 7 "EGR" of Par 1000 [UserFunct Enable] enables the EGR user function. The combination of bit 0 "Output Sel 0" and bit 1 "Output Sel 1" determines the output of the EGR user function as follows: Note: This parameter was added for firmware version 4.001.					

Bit 1	Bit 0	Description
0	0	Par 1165 [EGR Pos Output] is set to zero
0	1	Par 1165 [EGR Pos Output] is active
1	0	Par 1165 [EGR Pos Output] is set to the value of Par 1164 [EGR Pos Input]
1	1	Par 1165 [EGR Pos Output] is set to the value of Par 1166 [EGR Pos preset]

Options	Reserved	Reserved	Reserved	Reserved	Reserved	Reserved	Reserved	Reserved	Reserved	Reserved	Reserved	Reserved	Reserved	Reserved	Output Sel 1	Output Sel 0
Default	x	x	x	x	x	x	x	x	x	x	x	x	x	x	0	0
Bit	15	14	13	12	11	10	9	8	7	6	5	4	3	2	1	0

0 = False
1 = True

No.	Name Description	Values		Linkable	Read-Write	Data Type
1162	**EGR Mul** Multiplier (numerator) of the EGR user function position input. (Par 1164 [EGR Pos Input] x Par 1162 [EGR Mul]) / Par 1163 [EGR Div] = Par 1165 [EGR Pos Output] Note: This parameter was added for firmware version 4.001.	Default: Min/Max:	1.0 -/+2000000.0	Y	RW	32-bit Integer
1163	**EGR Div** Divisor (denominator) of the EGR user function position input. (Par 1164 [EGR Pos Input] x Par 1162 [EGR Mul]) / Par 1163 [EGR Div] = Par 1165 [EGR Pos Output] Note: This parameter was added for firmware version 4.001.	Default: Min/Max:	1.0 +1.0/+2000000.0	Y	RW	32-bit Integer
1164	**EGR Pos Input** Position reference input to the Electrical Gear Ratio user function. This parameter can be linked to a position reference source, such as Par 1160 [VirtEncPositFast]. Note: This parameter was added for firmware version 4.001.	Default: Min/Max:	0.0 -/+2147483648.0	Y	RW	32-bit Integer
1165	**EGR Pos Output** Position reference output from the Electrical Gear Ratio user function. This parameter can be linked to a position reference sink, such as Par 1155 [Heidn VM Pos Ref]. Note: This parameter was added for firmware version 4.001.	Default: Min/Max:	0.0 -/+2147483648.0		RO	32-bit Integer
1166	**EGR Pos Preset** A preset value for the Electrical Gear Ratio user function. This value is set to the value in Par 1165 [EGR Pos Output] when bits 0 "Output Sel 0" and 1 "Output Sel 1" of Par 1161 [EGR Config] are set. Note: This parameter was added for firmware version 4.001.	Default: Min/Max:	0.0 -/+2147483648.0	Y	RW	32-bit Integer

No.	Name Description	Values		Linkable	Read-Write	Data Type
1168	**MC TP3 Select** Enter a value to select Motor Control (MC) data displayed in Par 1169 [MC TP3 Value]. Par 1168 [MC TP3 Select] and Par 1169 [MC TP3 Value] are diagnostic tools you can use to view internal drive parameters	Default: Options:	0 = VdsError 0 = VdsError 1 = VdsRef 2 = VdsFdbk 3 = SlipGain 4 = SlipGnMaxLim 5 = SlipGnMinLim 6 = SlipGainRtd 7 = MaxSlipGain 8 = MinSlipGain 9 = KpTermSlipRg 10 = IntgtrmSlpRg 11 = P510Bit26 12 = LatchedSlpGn	Y	RW	32-bit Integer
1169	**MC TP3 Value** Displays the data selected by Par 1168 [MC TP3 Select]. This display should only be used if the selected value is integer data. This parameter is a diagnostic tool you can use to view internal drive parameters	Default: Min/Max:	0.0 -/+2147483648.0		RO	32-bit Integer
1170	**MC Generic 1** For Future Use. Note: This parameter was added for firmware version 4.001.	Default: Min/Max:	0 +/-32767		RW	16-bit Integer
1171	**MC Generic 2** For Future Use. Note: This parameter was added for firmware version 4.001.	Default: Min/Max:	0 +/-32767		RW	16-bit Integer
1172	**MC Generic 3** For Future Use. Note: This parameter was added for firmware version 4.001.	Default: Min/Max:	0 +/-32767		RW	16-bit Integer
1173	**MC Generic 4** For Future Use. Note: This parameter was added for firmware version 4.001.	Default: Min/Max:	0 +/-32767		RW	16-bit Integer
1174	**MC Generic 5** For Future Use. Note: This parameter was added for firmware version 4.001.	Default: Min/Max:	0 +/-32767		RW	16-bit Integer
1175	**MC Generic 6** For Future Use. Note: This parameter was added for firmware version 4.001.	Default: Min/Max:	0 +/-32767		RW	16-bit Integer
1176	**MC Generic 7** For Future Use. Note: This parameter was added for firmware version 4.001.	Default: Min/Max:	0 +/-32767		RW	16-bit Integer
1177	**MC Generic 8** For Future Use. Note: This parameter was added for firmware version 4.001.	Default: Min/Max:	0 +/-32767		RW	16-bit Integer
1178	**MC Generic 9** For Future Use. Note: This parameter was added for firmware version 4.001.	Default: Min/Max:	0 +/-32767		RW	16-bit Integer
1179	**MC Generic 10** For Future Use. Note: This parameter was added for firmware version 4.001.	Default: Min/Max:	0 +/-32767		RW	16-bit Integer

Parameter Cross Reference By Name

Param Name Text	Parameter #
% Motor Flux	309
+Hrd OvrTrvlCnfg	397
+Sft OvrTrvlCnfg	395
700L AlarmStatus	334
700L EventStatus	332
700L FaultStatus	333
Abs OverSpd Lim	335
Abs Posit Offset	757
Accel Time 1	32
Act Spd Reg BW	97
CurrFdbk AdjTime	551
AddSub 1 Add	1097
AddSub 1 Input	1096
AddSub 1 Result	1099
AddSub 1 Subtrct	1098
AddSub 2 Add	1101
AddSub 2 Input	1100
AddSub 2 Result	1103
AddSub 2 Subtrct	1102
AddSub 3 Add	1105
AddSub 3 Input	1104
AddSub 3 Result	1107
AddSub 3 Subtrct	1106
AI 1 Filt Gain	804
AI 2 Filt Gain	810
AI 3 Filt Gain	816
Alarm Status 1	326
Alarm Status 2	327
Alarm Status 3	328
Analog I/O Units	821
Anlg In1 Data	800
Anlg In1 Filt BW	805
Anlg In1 Offset	803
Anlg In1 Scale	802
Anlg In1 Value	801
Anlg In1LossCnfg	1093
Anlg In2 Data	806
Anlg In2 Filt BW	811
Anlg In2 Offset	809
Anlg In2 Scale	808
Anlg In2 Value	807
Anlg In2LossCnfg	1094
Anlg In3 Data	812
Anlg In3 Filt BW	817
Anlg In3 Offset	815
Anlg In3 Scale	814
Anlg In3 Value	813
Anlg In3LossCnfg	1095
Anlg Out1 DInt	832
Anlg Out1 Offset	834
Anlg Out1 Real	833

Param Name Text	Parameter #
Anlg Out1 Scale	835
Anlg Out1 Sel	831
Anlg Out1 Value	837
Anlg Out1 Zero	836
Anlg Out2 DInt	839
Anlg Out2 Offset	841
Anlg Out2 Real	840
Anlg Out2 Scale	842
Anlg Out2 Sel	838
Anlg Out2 Value	844
Anlg Out2 Zero	843
Applied LogicCmd	152
Atune Spd Ref	74
Atune Trq Ref	129
Aux Posit Ref	743
BasicIndx Output	799
BasicIndx Preset	798
BasicIndx Step	797
BitSwap 1 Result	864
BitSwap 1A Bit	861
BitSwap 1A Data	860
BitSwap 1B Bit	863
BitSwap 1B Data	862
BitSwap 2 Result	869
BitSwap 2A Bit	866
BitSwap 2A Data	865
BitSwap 2B Bit	868
BitSwap 2B Data	867
BitSwap 3 Result	874
BitSwap 3A Bit	871
BitSwap 3A Data	870
BitSwap 3B Bit	873
BitSwap 3B Data	872
BitSwap 4 Result	879
BitSwap 4A Bit	876
BitSwap 4A Data	875
BitSwap 4B Bit	878
BitSwap 4B Data	877
BitSwap 5 Result	884
BitSwap 5A Bit	881
BitSwap 5A Data	880
BitSwap 5B Bit	883
BitSwap 5B Data	882
BitSwap 6 Result	889
BitSwap 6A Bit	886
BitSwap 6A Data	885
BitSwap 6B Bit	888
BitSwap 6B Data	887
Brake OL Cnfg	369
Brake PulseWatts	416
Brake TP Data	419
Brake TP Sel	418
Brake Watts	417
Brake/Bus Cnfg	414

Param Name Text	Parameter #
Break Frequency	530
Break Voltage	529
Bus Reg ACR Kp	548
Bus Reg Kd	547
Bus Reg Ki	545
Bus Reg Kp	546
Bus Util Limit	500
BusReg/Brake Ref	415
BusUndervoltCnfg	393
Cnv NotLogin Cfg	368
Coarse Spd Trgt	750
CoarsePosit Trgt	748
Compare 1A	1071
Compare 1B	1072
Compare 2A	1073
Compare 2B	1074
Control Options	153
CurrFdbk AdjTime	551
Current Limit Gain	362
Current Reg BW	503
Curr Ref TP Data	358
Curr Ref TP Sel	357
DC Brake Level	1125
DC Brake Time	1126
DC Bus Voltage	306
Dead Time	404
Dead Time Comp	405
Decel Time 1	33
Delayed Spd Ref	45
DelayTimer1Accum	1111
DelayTimer1PrSet	1110
DelayTimer1Stats	1112
DelayTimer2Accum	1116
DelayTimer2PrSet	1115
DelayTimer2Stats	1117
DelTmr1 Trig Bit	1109
DelTmr1 TrigData	1108
DelTmr2 Trig Bit	1114
DelTmr2 TrigData	1113
DeltaSpeedScale	60
Dig In1 Sel	825
Dig In2 Sel	826
Dig In3 Sel	827
Dig In4 Sel	828
Dig In5 Sel	829
Dig In6 Sel	830
Dig Out1 Bit	847
Dig Out1 Data	846
Dig Out1 OffTime	849
Dig Out1 On Time	848
Dig Out1 Sel	845
Dig Out2 Bit	852
Dig Out2 Data	851
Dig Out1 OffTime	854

Param Name Text	Parameter #
Dig Out2 On Time	853
Dig Out2 Sel	850
DigIn ConfigStat	159
DigIn Debounce	823
DInt2Real1 In	1047
DInt2Real1 Scale	1048
DInt2Real1Result	1049
DInt2Real2 In	1150
DInt2Real2 Scale	1151
DInt2Real2Result	1152
Direction Mask	673
Direction Owner	680
DPI CommLoss Cfg	391
DPI Data In A1	651
DPI Data In A2	652
DPI Data In B1	653
DPI Data In B2	654
DPI Data In C1	655
DPI Data In C2	656
DPI Data In D1	657
DPI Data In D2	658
DPI Data Out A1	660
DPI Data Out A2	661
DPI Data Out B1	662
DPI Data Out B2	663
DPI Data Out C1	664
DPI Data Out C2	665
DPI Data Out D1	666
DPI Data Out D2	667
DPI In DataType	650
DPI Out DataType	659
Drive Logic Rslt	158
Drive OL JnctTmp	345
Drive OL Status	346
Drive OL TP Data	348
Drive OL TP Sel	347
Drive Ramp Rslt	53
EGR Config	1161
EGR Div	1163
EGR Mul	1162
EGR Pos Input	1164
EGR Pos Output	1165
EGR Pos Preset	1166
Elapsed MWHrs	299
Elapsed Run Time	298
Encdr 0/1 Config	233
Encdr 0/1 Error	234
Encdr0 Position	230
Encdr0 Spd Fdbk	231
Encdr1 Position	240
Encdr1 Spd Fdbk	241
Encoder0 PPR	232
Encoder1 PPR	242
Err Count Lmt	589

Param Name Text	Parameter #
Est Theta Delay	477
Estimated Torque	471
Exception Event1	320
Exception Event2	321
Exception Event3	322
External DB Res	544
Ext Flt/Alm Cnfg	379
Fault Clr Mask	674
Fault Clr Owner	681
Fault Status 1	323
Fault Status 2	324
Fault Status 3	325
Fault TP Data	330
Fault TP Sel	329
FB Opt0 Posit	250
FB Opt0 Spd Fdbk	251
FB Opt1 Posit	252
FB Opt1 Spd Fdbk	253
Fdbk LsCnfg Alt	366
Fdbk LsCnfg Pri	365
Fdbk LsCnfgPosit	367
Fdbk Option ID	249
FdbkAxis FdbkSel	701
FdbkAxis FdbkVal	702
FdbkAxis RotFdbk	709
FdbkAxisUnwdFdbk	710
Filtered SpdFdbk	71
Flux Current	488
Flux Rate Limit	425
Flux Ratio Ref	424
Flux Reg I Gain	444
Flux Reg P Gain1	443
Flux Reg P Gain2	470
Flux Satur Coef	426
Flx CurFdbk (Id)	489
Flx LpassFilt BW	361
Flying StartGain	170
FricComp Rated	68
FricComp Setup	65
FricComp Slip	67
FricComp Spd Ref	64
FricComp Stick	66
FricComp Trq Add	69
From DL DataType	601
FromDriveLogix00	602
FromDriveLogix01	603
FromDriveLogix02	604
FromDriveLogix03	605
FromDriveLogix04	606
FromDriveLogix05	607
FromDriveLogix06	608
FromDriveLogix07	609
FromDriveLogix08	610
FromDriveLogix09	611

Param Name Text	Parameter #
FromDriveLogix10	612
FromDriveLogix11	613
FromDriveLogix12	614
FromDriveLogix13	615
FromDriveLogix14	616
FromDriveLogix15	617
FromDriveLogix16	618
FromDriveLogix17	619
FromDriveLogix18	620
FromDriveLogix19	621
FromDriveLogix20	622
FVC CEMF Comp	469
FVC Mode Config	510
FVC Tune Config	515
FVC2 Mode Config	511
FVC2 Tune Config	516
FW Functions En	147
FW FunctionsActl	149
FW TaskTime Actl	148
FW TaskTime Sel	146
Fwd Speed Limit	76
Hardware Present	145
Heatsink Temp	313
Heidenhain0 Cnfg	263
Heidenhain0 Stat	264
Heidn Encdr PPR	267
Heidn Encdr Type	266
Heidn Mkr Offset	265
Heidn VM Enc PPR	1155
Heidn VM Pos Ref	1156
HiHp InPhsLs Cfg	370
Home Accel Time	1120
Home Actual Pos	1124
Home Decel Time	1121
Home Position	1123
Home Speed	1122
-Hrd OvrTrvlCnfg	398
IdsCmd Slew Rate	586
IdsCompCoeff Mot	459
IdsCompCoeff Reg	460
Ids Command	496
Ids Integ Freq	429
Ids Reg P Gain	430
In Posit BW	782
In Posit Dwell	783
Inert Adapt BW	133
Inert Adapt Gain	134
Inert Adapt Sel	132
Inertia SpeedRef	56
Inertia Trq Add	59
Inertia TrqLpfBW	54
InertiaAccelGain	57
InertiaDecelGain	58
Interp AccelRate	752

Param Name Text	Parameter #
Interp Flt Cnfg	378
Interp Position	749
Interp Speed	751
Interp SyncInput	693
Inv OL Pend Cnfg	376
Inv OL Trip Cnfg	377
Inv OT Pend Cnfg	375
Iq Actual Lim	353
Iq Actual Ref	350
Iq Rate Limit	354
Iq Ref Limited	355
Iq Ref Trim	351
Iqs Command	495
Iqs Integ Freq	421
Iqs Rate Limit	423
Iqs Reg P Gain	422
Ireg IGain Fctr	428
Is Actual Lim	352
Iu Offset	453
Iw Offset	454
Jerk	42
Jog Mask	672
Jog Owner	679
Jog Speed 1	29
Jog Speed 2	39
Kd Current Limit	364
Ki Current Limit	363
Language	201
Leak Indc Satur1	493
Leak Indc Satur2	494
Leak Inductance	492
LED Status	554
Lgx Closed Cnfg	388
Lgx Comm Format	600
Lgx CommLossData	385
Lgx LinkChngCnfg	389
Lgx OutOfRunCnfg	386
Lgx Timeout Cnfg	387
LID Version Num	455
LimGen X axis In	206
LimGen Y axis Mn	205
LimGen Y axis Mx	204
Limit Gen Hi Out	207
Limit Gen Lo Out	208
Limit Status	304
Limited Spd Ref	41
Lin1 Update Rate	289
Lin1Stahl Status	291
Line Undervolts	409
Linear1 Config	285
Linear1 CPR	290
Linear1 Status	286
Linear1 TP Data	288
Linear1 TP Sel	287

Param Name Text	Parameter #
Load Estimate	221
Local I/O Status	824
Logic 1A Bit	1064
Logic 1A Data	1063
Logic 1B Bit	1066
Logic 1B Data	1065
Logic 2A Bit	1068
Logic 2A Data	1067
Logic 2B Bit	1070
Logic 2B Data	1069
Logic Command	151
Logic Config	1061
Logic Ctrl State	157
Logic Mask	670
Logic Mask Act	713
Logic State Mach	150
Logic Status	155
Logic TP Data	162
Logic TP Sel	161
Logic/Cmpr State	1062
LstFaultStopMode	331
Max Spd Ref Lim	31
Maximum Freq	532
Maximum Voltage	531
MC Build Number	456
MC Cmd Lim Cnfg	382
MC Diag Done	519
MC Diag Error 1	463
MC Diag Error 2	464
MC Diag Error 3	465
MC Diag Status	518
MC FaultTPSelect	475
MC FaultTP Value	476
MC Firmware Rev	457
MC Generic 1	1170
MC Generic 2	1171
MC Generic 3	1172
MC Generic 4	1173
MC Generic 5	1174
MC Generic 6	1175
MC Generic 7	1176
MC Generic 8	1177
MC Generic 9	1178
MC Generic 10	1179
MC Status	555
MC TP1 Bit	468
MC TP1 Select	466
MC TP1 Value	467
MC TP2 Select	473
MC TP2 Value	474
MC TP3 Select	1168
MC TP3 Value	1169
Min Flux	360
Min Spd Ref Lim	30

Param Name Text	Parameter #
MOP Control	1086
MOP High Limit	1088
MOP Level DInt	1092
MOP Level Real	1090
MOP Low Limit	1089
MOP Rate	1087
MOP Scale Dint	1091
Motn Axis Resp	689
Motn Axis Status	687
Motn AxisControl	688
Motn Cnct Status	690
Motn CoarseMulti	685
Motn Config	686
Motn Event Ctrl	692
Motn EventStatus	691
Motn Mx Neg Trvl	695
Motn Mx Pos Trvl	694
Motn Posit Cmmd	698
Motn Posit Sync	700
Motn PositErrTol	696
Motn RotaryCmmd	705
Motn Speed Cmmd	699
Motn TP Select	703
Motn TP Value	704
MotnCnfgErrParam	711
MotnPositLockTol	697
MotnUnwdTurnCmmd	706
MotnUpdatePeriod	684
Motor Ctrl Ackn	167
Motor Ctrl Cmmd	166
Motor Ctrl Mode	485
Motor Flux Est	359
Motor Freq Ref	296
Motor NP FLA	2
Motor NP Hertz	3
Motor NP Power	5
Motor NP RPM	4
Motor NP Volts	1
Motor NTC Coef	487
Motor OL Factor	336
Motor Poles	7
Motor Posit Est	227
Motor Spd Fdbk	300
Motor Speed Est	226
Motor Speed Ref	301
Motor Stall Cnfg	374
Motor Stall Time	373
Motor Torque Ref	303
MotorFluxCurr FB	312
Mth Amplitude	598
Mth CompOff Freq	535
Mth Phase Shift	599
Mth Torq Compen	597
Mtr Current Lim	356

Param Name Text	Parameter #
Mtr Fdbk Sel Alt	223
Mtr Fdbk Sel Pri	222
Mtr I2T Calibrat	339
Mtr I2T Count	341
Mtr I2T Curr Min	337
Mtr I2T Spd Min	338
Mtr I2T Trp ThrH	340
Mtr NP Pwr Units	6
Mtr OL Pend Cnfg	372
Mtr OL Trip Cnfg	371
Mtr Trq Curr Ref	305
Mtr Vds Base	434
Mtr Vqs Base	435
Mtring Power Lim	127
MtrPosit Simulat	229
MtrSpd Simulated	228
MulDiv 1 Div	1055
MulDiv 1 Input	1053
MulDiv 1 Mul	1054
MulDiv 1 Result	1056
MulDiv 2 Div	1059
MulDiv 2 Input	1057
MulDiv 2 Mul	1058
MulDiv 2 Result	1060
NetLoss DPI Cnfg	392
Normal Stop Mode	168
Notch Filt Freq	118
NotchAttenuation	117
Nth Amplitude	595
Nth CompOff Freq	534
Nth Phase Shift	596
Nth Torq Compen	594
OL ClsLp CurrLim	344
OL OpnLp CurrLim	343
Opt 0 Regis Ltch	257
Opt 1 Regis Ltch	258
Opt0/1 RegisCnfg	254
Opt0/1 RegisCtrl	255
Opt0/1 RegisStat	256
Output Curr Disp	297
Output Current	308
Output Freq	310
Output Power	311
Output Voltage	307
ParamAccessLevel	196
PeakDetect1 Out	215
PeakDetect2 Out	219
PeakDtct Ctrl In	210
PeakDtct Status	211
PeakDtct1 Preset	214
PeakDtct2 Preset	218
PI Error	183
PI Feedback	182
PI High Limit	191

Param Name Text	Parameter #
PI Integ HLim	188
PI Integ LLim	189
PI Integ Output	190
PI Integ Time	187
PI Lower Limit	192
PI Lpass Filt BW	184
PI Output	180
PI Preload	185
PI Prop Gain	186
PI Reference	181
PI TP Data	179
PI TP Sel	178
PkDtct1 In DInt	212
PkDtct1 In Real	213
PkDtct2 In DInt	216
PkDtct2 In Real	217
PLL Bandwidth	722
PLL Control	720
PLL EPR Input	725
PLL EPR Output	726
PLL Ext Spd Ref	728
PLL Ext SpdScale	729
PLL LPFilter BW	730
PLL FiltPositOut	733
PLL Posit Out	731
PLL Posit OutAdv	732
PLL Position Ref	721
PLL Rev Input	723
PLL Rev Output	724
PLL Speed Out	734
PLL SpeedOut Adv	735
PLL TP DataDInt	718
PLL TP DataReal	719
PLL TP Select	717
PLL VirtEncdrRPM	727
PM AbsEncd Offst	504
PM D Inductance	521
PM Mtr CEMF Coef	523
PM Mtr CEMF Comp	427
PM Q Inductance	520
PM Stator Resist	522
PM Test Freq Ref	508
PM Test FreqRamp	507
PM Test I Ref	509
PM Test Idc Ramp	506
PM TestWait Time	505
PMag Mode Config	512
PMag Tune Config	517
Port Mask Act	714
Posit Actl Load	765
Posit Detct1 In	784
Posit Detct2 In	785
Posit FB EGR Div	767
Posit FB EGR Mul	766

Param Name Text	Parameter #
Posit Gear Ratio	796
Posit Load Fdbk	764
Posit Offset 1	753
Posit Offset 2	754
Posit Offset Spd	755
Posit Spd Output	318
Posit TP Select	737
PositDetct1 Stpt	780
PositDetct2 Stpt	781
Position Actual	763
Position Cmmd	747
Position Control	740
Position ErrCnfg	399
Position Error	769
Position Fdbk	762
Position Ref Sel	742
Position Status	741
PositionFdbk Sel	777
PositRef EGR Div	746
PositRef EGR Mul	745
PositRef EGR Out	744
PositReg Droop	771
PositReg Integ	770
PositReg P Gain	768
PositTP DataDInt	738
PositTP DataReal	739
Power EE TP Data	413
Power EE TP Sel	412
Power Loss Level	408
Power Loss Mode	406
Power Loss Time	407
PPMP Accel Time	1139
PPMP Control	1134
PPMP Decel Time	1140
PPMP Fwd Spd Lim	1137
PPMP Over Ride	1138
PPMP Pos Command	1130
PPMP Pos Div	1132
PPMP Pos Mul	1131
PPMP Pos Output	1143
PPMP Pos To Go	1144
PPMP Rev Spd Lim	1136
PPMP Scaled Cmd	1133
PPMP SCurve Time	1141
PPMP Spd Output	1142
PPMP Status	1135
PPMP TP DataDInt	1146
PPMP TP DataReal	1147
PPMP TP Select	1145
PreCharge Delay	472
PreChrg Control	411
PreChrg Err Cnfg	381
PreChrg TimeOut	410
Preset Speed 1	14

Param Name Text	Parameter #
Preset Speed 2	15
Preset Speed 3	16
Preset Speed 4	17
Preset Speed 5	18
Preset Speed 6	19
Preset Speed 7	20
Pt-Pt Accel Time	759
Pt-Pt Decel Time	760
Pt-Pt Filt BW	761
Pt-Pt Posit Ref	758
PWM Frequency	402
Pwr Strct Mode	420
Ramped Spd Ref	43
Rated Amps	400
Rated Slip Freq	486
Rated Volts	401
Real2DInt In	1050
Real2DInt Result	1052
Real2DInt Scale	1051
Regen Power Lim	128
RegisLtch0 Value	235
RegisLtch0/1Cnfg	236
RegisLtch0/1Ctrl	237
RegisLtch0/1Stat	238
RegisLtch1 Value	239
Reslvr0 CableBal	276
Reslvr0 Carrier	273
Reslvr0 In Volts	274
Reslvr0 SpdRatio	272
Reslvr0 TP Data	271
Reslvr0 TP Sel	270
Reslvr0 Type Sel	277
Resolver0 Cnfg	268
Resolver0 Status	269
Rev Speed Limit	75
Rly Out3 Bit	857
Rly Out3 Data	856
Rly Out3 OffTime	859
Rly Out3 On Time	858
Rly Out3 Sel	855
Rotor Resistance	502
Rslvr0 XfrmRatio	275
RsTempCoefAdjust	590
RsTmpCoefAdjstEn	591
Run Boost	528
Rx Buf Data Type	933
Rx Dir Data Type	928
S Curve Time	34
Saved Events	436
Scaled Spd Fdbk	72
Scaled Spd Ref	46
Sel Switch Ctrl	1022
Sel Swtch In00	1029
Sel Swtch In01	1030

Param Name Text	Parameter #
Sel Swtch In02	1031
Sel Swtch In03	1032
Sel Swtch In04	1033
Sel Swtch In05	1034
Sel Swtch In06	1035
Sel Swtch In07	1036
Sel Swtch In08	1037
Sel Swtch In09	1038
Sel Swtch In10	1039
Sel Swtch In11	1040
Sel Swtch In12	1041
Sel Swtch In13	1042
Sel Swtch In14	1043
Sel Swtch In15	1044
Selected Spd Ref	40
Selected SpdRefA	49
Selected SpdRefB	50
Selected Trq Ref	319
SelSwtch DIntOut	1046
SelSwtch RealOut	1045
SrLssAngleStblty	537
SrLss VoltStblty	538
SrLss StbltyFilt	539
Servo Lock Gain	85
Set Speed Lim	171
Setpt 1 Data	172
Setpt 1 Limit	174
Setpt 2 Data	175
Setpt 2 Limit	177
Setpt1 TripPoint	173
Setpt2 TripPoint	176
-Sft OvrTrvlCnfg	396
Skip Speed 1	136
Skip Speed 2	137
Skip Speed 3	138
Skip Speed Band	139
SL BOF Err Accum	896
SL BOF Err Limit	899
SL BOF Error	897
SL Buf Data Rx00	934
SL Buf Data Rx01	935
SL Buf Data Rx02	936
SL Buf Data Rx03	937
SL Buf Data Rx04	938
SL Buf Data Rx05	939
SL Buf Data Rx06	940
SL Buf Data Rx07	941
SL Buf Data Rx08	942
SL Buf Data Rx09	943
SL Buf Data Rx10	944
SL Buf Data Rx11	945
SL Buf Data Rx12	946
SL Buf Data Rx13	947
SL Buf Data Rx14	948

Param Name Text	Parameter #
SL Buf Data Rx15	949
SL Buf Data Rx16	950
SL Buf Data Rx17	951
SL Buf Data Rx18	952
SL Buf Data Rx19	953
SL Buf Data Rx20	954
SL Buf Data Rx21	955
SL Buf Data Rx22	956
SL Buf Data Rx23	957
SL Buf Data Rx24	958
SL Buf Data Rx25	959
SL Buf Data Rx26	960
SL Buf Data Rx27	961
SL Buf Data Rx28	962
SL Buf Data Rx29	963
SL Buf Data Tx00	970
SL Buf Data Tx01	971
SL Buf Data Tx02	972
SL Buf Data Tx03	973
SL Buf Data Tx04	974
SL Buf Data Tx05	975
SL Buf Data Tx06	976
SL Buf Data Tx07	977
SL Buf Data Tx08	978
SL Buf Data Tx09	979
SL Buf Data Tx10	980
SL Buf Data Tx11	981
SL Buf Data Tx12	982
SL Buf Data Tx13	983
SL Buf Data Tx14	984
SL Buf Data Tx15	985
SL Buf Data Tx16	986
SL Buf Data Tx17	987
SL Buf Data Tx18	988
SL Buf Data Tx19	989
SL Buf Data Tx20	990
SL Buf Data Tx21	991
SL Buf Data Tx22	992
SL Buf Data Tx23	993
SL Buf Data Tx24	994
SL Buf Data Tx25	995
SL Buf Data Tx26	996
SL Buf Data Tx27	997
SL Buf Data Tx28	998
SL Buf Data Tx29	999
SL Clr Events	916
SL Comm TP Data	893
SL Comm TP Sel	892
SL CommLoss Cnfg	384
SL CommLoss Data	383
SL CRC Err Accum	894
SL CRC Err Limit	898
SL CRC Error	895
SL Dir Data Rx00	929

Param Name Text	Parameter #
SL Dir Data Rx01	930
SL Dir Data Rx02	931
SL Dir Data Rx03	932
SL Dir Data Tx00	965
SL Dir Data Tx01	966
SL Dir Data Tx02	967
SL Dir Data Tx03	968
SL Error History	903
SL Error Status	902
SL Mult A In	924
SL Mult B In	925
SL Mult Base	923
SL Mult Out	926
SL Mult State	927
SL MultErr Cnfg	390
SL Node Cnfg	904
SL Rcv Events	915
SL Real2DInt In	921
SL Real2DInt Out	922
SL Rx CommFormat	905
SL Rx DirectSel0	906
SL Rx DirectSel1	907
SL Rx DirectSel2	908
SL Rx DirectSel3	909
SL Rx P0 Regis	917
SL Rx P1 Regis	918
SL System Rev	901
SL System Time	317
SL Tx CommFormat	910
SL Tx DirectSel0	911
SL Tx DirectSel1	912
SL Tx DirectSel2	913
SL Tx DirectSel3	914
SLAT Dwell Time	120
SLAT ErrorSetpnt	119
Sleep Control	284
Sleep Level	282
Sleep Time	283
Sleep-Wake Mode	278
Sleep-Wake Ref	279
SlewRateTimeLimit	533
SlipReg Err Lmt	587
SlipReg Off Iqs	461
SlipReg On Hystr	593
Slip Comp Gain	99
Slip Gain Max	445
Slip Gain Min	446
Slip Preload Val	552
Slip Ratio	525
Slip Reg I Gain	448
Slip Reg P Gain	447
Slip RPM @ FLA	98
Slip RPM Meter	107
Slip Slew Rate	553

Param Name Text	Parameter #
Spd Err Filt BW	89
Spd Fdbk Scale	73
Spd Fdbk TP Data	247
Spd Fdbk TP RPM	246
Spd Fdbk TP Sel	245
Spd Ref Bypass	37
Spd Ref Bypass2	48
Spd Ref TP Data	79
Spd Ref TP RPM	78
Spd Ref TP Sel	77
Spd Ref1 Divide	11
Spd Ref2 Multi	13
Spd Reg BW	90
Spd Reg Damping	91
Spd Reg Droop	86
Spd Reg I Gain	82
Spd Reg Neg Lim	103
Spd Reg P Gain	81
Spd Reg PI Out	302
Spd Reg Pos Lim	102
Spd Reg TP Data	109
Spd Reg TP Sel	108
SpdRef + SpdTrm1	47
SpdRef Filt BW	36
SpdRef Filt Gain	35
SpdReg AntiBckup	84
SpdReg Integ Out	101
SpdReg P Gain Mx	92
SpdTrim 3 Scale	24
SpdTrim2 Filt BW	26
Speed Comp	55
Speed Error	100
Speed Ref 1	10
Speed Ref 2	12
Speed Ref A Sel	27
Speed Ref B Sel	28
Speed Ref Scale	38
Speed Trim 1	21
Speed Trim 2	22
Speed Trim 3	23
Speed/TorqueMode	110
SReg FB Filt BW	94
SReg Out Filt BW	96
SReg Trq Preset	87
SRegFB Filt Gain	93
SRegOut FiltGain	95
SrLss Angl Comp	541
SrLss FreqReg Ki	449
SrLss FreqReg Kp	450
Srlss Spd Reg BW	106
Srlss Spd Reg Ki	105
Srlss Spd Reg Kp	104
SrLss StbltyFilt	539
SrLss Volt Comp	542

Param Name Text	Parameter #
SrLss VoltStblty	538
Srlss ZeroSpdLim	169
SrLssAngleStblty	537
SrvoAxis RotFdbk	707
SrvoAxisUnwdFdbk	708
Start/Acc Boost	527
Start Inhibits	156
Start Mask	671
Start Owner	678
Start/Acc Boost	527
Startup State	452
Stator Frequency	526
StatorInductance	490
StatorResistance	491
Steg&Heidn TPDta	262
Steg&Heidn TPSel	261
Stegmann0 Cnfg	259
Stegmann0 Status	260
Stop Dwell Time	154
Stop Oper TP Sel	163
Stop Owner	677
StopOper TP Data	164
STrim2 Filt Gain	25
Swtch DInt 1 NC	1026
Swtch DInt 1 NO	1027
Swtch DInt 1 Out	1028
Swtch Real 1 NC	1023
Swtch Real 1 NO	1024
Swtch Real 1 Out	1025
SynchLink Rev	900
SynchLink Status	316
TachSwitch Level	224
Test Current Ref	431
Test Freq Rate	433
Test Freq Ref	432
Test Mode Config	514
Time Axis Output	203
Time Axis Rate	202
To DL DataType	625
To DriveLogix00	626
To DriveLogix01	627
To DriveLogix02	628
To DriveLogix03	629
To DriveLogix04	630
To DriveLogix05	631
To DriveLogix06	632
To DriveLogix07	633
To DriveLogix08	634
To DriveLogix09	635
To DriveLogix10	636
To DriveLogix11	637
To DriveLogix12	638
To DriveLogix13	639
To DriveLogix14	640

Param Name Text	Parameter #
To DriveLogix15	641
To DriveLogix16	642
To DriveLogix17	643
To DriveLogix18	644
To DriveLogix19	645
To DriveLogix20	646
Torque En Dly	501
Torque Neg Limit	126
Torque Pos Limit	125
Torque Ref1	111
Torque Ref1 Div	112
Torque Ref2	113
Torque Ref2 Mult	114
Torque Step	116
Torque Trim	115
Total Inertia	9
Trend Control	556
Trend In1 DInt	570
Trend In1 Real	571
Trend In2 DInt	574
Trend In2 Real	575
Trend In3 DInt	578
Trend In3 Real	579
Trend In4 DInt	582
Trend In4 Real	583
Trend Mark DInt	567
Trend Mark Real	568
Trend Out1 DInt	572
Trend Out1 Real	573
Trend Out2 DInt	576
Trend Out2 Real	577
Trend Out3 DInt	580
Trend Out3 Real	581
Trend Out4 DInt	584
Trend Out4 Real	585
Trend PreSamples	566
Trend Rate	559
Trend State	558
Trend Status	557
Trend Trig Bit	565
Trend Trig Data	564
Trend TrigA DInt	560
Trend TrigA Real	561
Trend TrigB DInt	562
Trend TrigB Real	563
TrendBuffPointer	569
Trq CurFdbk (Iq)	499
Trq NegLim Actl	124
Trq PosLim Actl	123
Trq Ref TP Data	131
Trq Ref TP Sel	130
Tune Test Status	165
Tx Buf Data Type	969
Tx Dir Data Type	964

Param Name Text	Parameter #
UserData Dint 01	1002
UserData Dint 02	1003
UserData Dint 03	1004
UserData Dint 04	1005
UserData Dint 05	1006
UserData Dint 06	1007
UserData Dint 07	1008
UserData Dint 08	1009
UserData Dint 09	1010
UserData Dint 10	1011
UserData Real 01	1012
UserData Real 02	1013
UserData Real 03	1014
UserData Real 04	1015
UserData Real 05	1016
UserData Real 06	1017
UserData Real 07	1018
UserData Real 08	1019
UserData Real 09	1020
UserData Real 10	1021
UserFunct Actual	1001
UserFunct Enable	1000
V/Hz Mode Config	513
V/Hz Status	540
Vds Command	498
Vds Fdbk Filt	441
Vds Max	438
Vds Min	440
VirtEncPositFast	1160
Virt Encdr Dlyed	63
Virt Encdr Posit	62
Virt Encoder EPR	61
Virtual Edge/Rev	225
Voltage Class	403
VoltFdbkLossCnfg	394
VPL Build Number	315
VPL Firmware Rev	314
VPL Mem Address	479
VPL Mem Data Bit	482
VPL Mem Data Flt	481
VPL Mem Data Int	480
VPL Mem Link Flt	484
VPL Mem Link Int	483
VPL Mem Password	478
Vqs Command	497
Vqs Fdbk Filt	442
Vqs Max	437
Vqs Min	439
VqsReg Err Lmt	588
VqsReg Off Freq	462
VqsReg On Hystr	592
Vuv Fdbk Offset	549
Vvw Fdbk Offset	550
Wake Level	280

Param Name Text	Parameter #
Wake Time	281
Write Mask	669
Write Mask Act	712
X Notch Attenu	778
X Notch FiltFreq	779
X Offst SpdFilt	756
XReg Integ HiLim	773
XReg Integ LoLim	772
XReg Integ Out	774
XReg Spd HiLim	776
XReg Spd LoLim	775
Xsync Gen Period	787
Xsync In 1	788
Xsync In 2	790
Xsync In 3	793
Xsync Out 1	789
Xsync Out 2	791
Xsync Out 2 Dly	792
Xsync Out 3	794
Xsync Out 3 Dly	795
Xsync Status	786
Zero Speed Lim	160

Troubleshooting

This chapter provides information to guide you in troubleshooting the PowerFlex® 700S drive. A list and description of drive faults (with possible solutions, when applicable) and alarms is included.

Status Indicators

The condition or state of your drive and DriveLogix™ controller (if installed) is constantly monitored. Any changes will be indicated through the front panel LEDs and/or the HIM (if present). See Drive Status Indicators on page 138 for more information. The DriveLogix option also provides a RUN LED and the controller LEDs that indicate the state of the controller. See DriveLogix5730 Controller Status Indicators on page 139 for more information.

Drive Status Indicators

Table 4 - Drive Status Indicator Descriptions

			#	Name	Color	State	Description
DRIVE	Power Structure		1	PWR (Power)	Green	Steady	Illuminates when power is applied to the drive.
			2	STS (Status)	Green	Flashing	Drive ready, but not running & no faults are present.
						Steady	Drive running, no faults are present.
					Yellow	Flashing	When running, a type 2 (non-configurable) alarm condition exists, drive continues to run. When stopped, a start inhibit exists and the drive cannot be started.
						Steady	A type 1 (user configurable) alarm condition exists, but drive continues to run.
					Red	Flashing	A fault has occurred.
						Steady	A non-resettable fault has occurred.
					Red / Yellow	Flashing Alternately	The drive is in flash recovery mode. The only operation permitted is flash upgrade.
	Control Assembly	Communications	3	PORT	Refer to the *Communication Adapter User Manual*		Status of DPI port internal communications (if present).
				MOD			Status of communications module (when installed).
				NET A			Status of network (if connected).
				NET B			Status of secondary network (if connected).
		Control	(1)	SYNCHLINK	Green	Steady	The module is configured as the time keeper. or The module is configured as a follower and synchronization is complete.
					Green	Flashing	The follower(s) are not synchronized with the time keeper.
					Red	Flashing	The module is configured as a time master on SynchLink™ and has received time information from another time master on SynchLink.
				ENABLE	Green	On	The drive's enable input is high.
					Green	Off	The drive's enable input is low.

(1) SynchLink LEDs are located on the SynchLink daughtercard on the main circuit board in the control cassette. Refer to the *SynchLink System Design Guide*, publication 1756-TD008, for more information.

DriveLogix5730 Controller Status Indicators

The status indicators (LEDs) for the DriveLogix controller are only operational when the drive is energized. The LEDs are only visible when the drive door is open or when viewed from the HIM or from an application program (e.g., DriveExplorer™) in parameter 554 [LED Status]. This feature is only available with DriveLogix version 15.03 or later.

ATTENTION: The RUN LED and the controller LEDs are only operational when the drive is energized, and are visible with the drive door open. Servicing energized equipment can be hazardous. Severe injury or death can result from electrical shock, burn or unintended actuation of controlled equipment. Follow Safety related practices of NFPA 70E, *ELECTRICAL SAFETY FOR EMPLOYEE WORKPLACES*. DO NOT work alone on energized equipment!

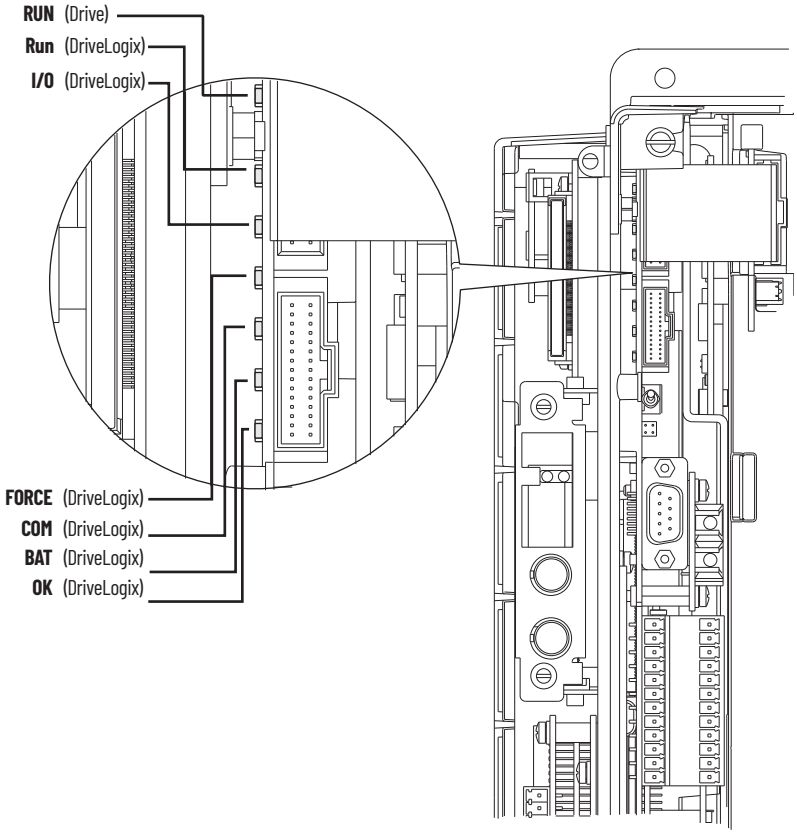

Table 5 - DriveLogix5730 Controller Status Indicator Descriptions

LED	Color/Condition:	Description:	
RUN	off	The controller is in Program or Test mode.	
	solid green	The controller is in Run mode.	
I/O	off	Either: There are *no* devices in the I/O configuration of the controller. The controller does *not* contain a project (controller memory is empty).	
	solid green	The controller is communicating with all the devices in its I/O configuration.	
	flashing green	One or more devices in the I/O configuration of the controller are *not* responding.	
	flashing red	The controller is not communicating to any devices. The controller is faulted.	
FORCE	off	No tags contain I/O force values. I/O forces are inactive (disabled).	
	solid amber	I/O forces are active (enabled). I/O force values may or may not exist.	
	flashing amber	One or more input or output address have been forced to an On or Off state, but the forces have not been enabled.	
COM	off	No RS-232 activity.	
	flashing green	RS-232 activity.	
BAT	off	The battery supports memory.	
	solid red	Either the battery is: • Not installed. • 95% discharged and should be replaced.	
OK	off	No power is applied.	
	flashing red	If the controller is:	Then:
		a new controller	the controller requires a firmware update
		not a new controller	A major fault occurred. To clear the fault, either: Turn the key switch from PROG to RUN to PROG Go online with RSLogix 5000 software
	solid red	The controller detected a non-recoverable fault, so it cleared the project from memory. To recover: • Cycle power to the chassis. • Download the project. • Change to Run mode. • If the OK LED remains solid red, contact your Rockwell Automation representative or local distributor.	
	solid green	Controller is OK.	
	flashing green	The controller is storing or loading a project to or from nonvolatile memory.	

Precharge Board Status Indicators

The Precharge Board indicators (LEDs) are found on Frame 5 and 6 drives only and are located above the "Line Type" Phase selection jumper. Refer to the PowerFlex 700S Adjustable Frequency Drive - Phase II Control, Frames 1...6 Installation Instructions, publication 20D-IN024, for the location of the Phase selection jumper.

Name	Color	State	Description
Power	Green	Steady	Indicates when precharge board power supply is operational
Alarm	Yellow	Flashing [1] [2] [3] [4] [5] [6] [7]	Number in "[ ]" indicates flashes and associated alarm (1): Low line voltage (<90%). Very low line voltage (<50%). Low phase (one phase <80% of line voltage). Frequency out of range or asymmetry (line sync failed). Low DC bus voltage (triggers ride-through operation). Input frequency momentarily out of range (40-65 Hz). DC bus short circuit detection active.
Fault	Red	Flashing [2] [4]	Number in "[ ]" indicates flashes and associated fault (2): DC bus short (Udc <2% after 20 ms). Line sync failed or low line (Uac <50% Unom).

(1) An alarm condition automatically resets when the condition no longer exists
(2) A fault indicates a malfunction that must be corrected and can only be reset after cycling power.

HIM Indication of a Fault

The HIM also provides visual notification of a fault.

Condition	Display
Drive is indicating a fault. The LCD HIM immediately reports the fault condition by displaying the following: • "Faulted" appears in the status line • Fault number • Fault name • Time that has passed since the fault occurred Press Esc to regain control of the HIM	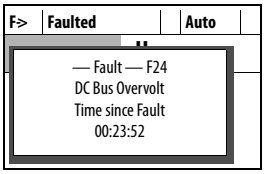

Manually Clearing Faults

Follow the steps to manually clear a fault:

1. Press (Esc) on the HIM to acknowledge the fault.
   The fault information will be removed so that you can use the HIM.
2. Address the condition that caused the fault.
   The cause must be corrected before the fault can be cleared.
3. After corrective action has been taken, clear the fault using one of the methods:

- Press (Stop) on the HIM
- Cycle drive power
- Select "Clear Faults" from the Diagnostics > Faults menu on the HIM

Fault and Alarm Types

A fault is a condition that stops the drive. An alarm is a condition that, if left untreated, may stop the drive. There are three configuration types for indicating a fault and/or alarm.

Table 6 - Fault Type Descriptions

Type	Fault Description	
1	Non-Configurable Fault	The cause of the fault must be corrected before the fault can be cleared.
2	User Configurable	Programming and commissioning personnel can configure the drive's response to the exception events. Response include: • Ignore • Alarm • Fault Coast Stop • Fault Ramp Stop • Fault Current Limit Stop
3	Non-Configurable Alarm	Can only be configured as a alarm.

Fault/Alarm Descriptions

Table 7 - Fault/Alarm Descriptions, Actions and Configuration Parameters

No.	Name	Type[1]	Description	Action
1	Abs Ovespd Det	1	The motor speed has exceeded the limits set in Par 75 [Rev Speed Limit], Par 76 [Fwd Speed Limit] and Par 335 [Abs OverSpd Lim].	• Check to see if the encoder feedback polarity is correct. • Check to see if the drive is in torque mode (selected in Par 110 [Speed/TorqueMode] value 2 "Torque Ref"). If the drive is in torque mode, verify that there is a load present. • Verify the min/max settings in Par 75 [Rev Speed Lim] and Par 76 [Fwd Speed Lim]. • Check to see if the load is overhauling. If it is overhauling, turn the bus regulator off using Par 414 [Brake/Bus Cnfg] bit 2 "BusRef High".
2	Vref Decel Fail	1	The value of Par 301 [Motor Spd Ref] has failed to decrease during a ramp to zero speed stop.	This could possibly be due to a speed trim from Par 21 [Speed Trim 1], Par 22 [Speed Trim 2] or Par 23 [Speed Trim 3].
3	Encoder 0 Loss	2	One of the following has occurred on encoder 0: • missing encoder (broken wire) • quadrature error • phase loss	Reconnect or replace the encoder. Configured with Par 365 [Fdbk LsCnfg Pri], Par 366 [Fdbk LsCnfg Alt], and Par 367 [Fdbk LsCnfgPosit].
4	Encoder 1 Loss	2	One of the following has occurred on encoder 1: • missing encoder (broken wire) • quadrature error • phase loss	Reconnect or replace the encoder. Configured with Par 365 [Fdbk LsCnfg Pri], Par 366 [Fdbk LsCnfg Alt], and Par 367 [Fdbk LsCnfgPosit].
5	Opt Port 0 Loss	2	A fault on port 0 of the Hi-Resolution Encoder feedback option card, MDI option card, Heidenhain option card, or Resolver feedback option card has occurred. • Par 260 [Stegmann0 Status] displays the fault status for port 0 of the Hi-Resolution Encoder feedback option card. • Par 264 [Heidenhain0 Stat] displays the fault status for port 0 of the Heidenhain feedback option card. • Par 269 [Resolver0 Status] displays the fault status for port 0 of the Resolver feedback option card.	• Reconnect or replace the encoder • Reconnect the option feedback card Configured with Par 365 [Fdbk LsCnfg Pri], Par 366 [Fdbk LsCnfg Alt], and Par 367 [Fdbk LsCnfgPosit].
6	Opt Port 1 Loss	2	The Linear sensor portion of the MDI feedback option card has detected a fault condition. • Par 286 [Linear1 Status] displays the fault status for linear portion of the MDI feedback option card.	• Reconnect or replace the encoder. • Reconnect the feedback option card. Configured with Par 365 [Fdbk LsCnfg Pri], Par 366 [Fdbk LsCnfg Alt], and Par 367 [Fdbk LsCnfgPosit].
7	Params Defaulted	1	All parameters are reset to default by user.	(Informational Only)
8	SLink HW Fail	1	A fault has occurred while loading the SynchLink firmware into FPGA on the Main Control board at power up.	Replace the Main Control board.
9	SLink Comm Fail	2	A SynchLink communication fault has occurred. • Par 902 [SL Error Status] displays SynchLink errors.	Verify the SynchLink configuration in: • Par 904 [SL Node Cnfg] • Par 905 [SL Rx CommFormat], and • Par 910 [SL Tx CommFormat] Reconnect SynchLink communication fibers. Configured with Par 384 [SL CommLoss Cnfg].
10	Drive Power Loss	1	One of the following has occurred: • DC Bus voltage has fallen below the minimum value. • Par 306 [DC Bus Voltage] displays bus voltage. • Par 330 [Fault TP Data] displays the minimum value when Par 329 [Fault TP I] is set to five. • The drive must first complete precharge before this check is made.	Verify AC line power.
11	Motor OLoad Trip	2	A motor overload trip has occurred. Par 308 [Output Current] is squared, scaled and integrated over time. When this integrated value exceeds 1.0, this exception event occurs. The integrator's output can be viewed in Par 330 [Fault TP Data] when Par 329 [Fault TP I] is set to 13 "Mtr OL Outpt". The overload integration rate is affected by Par 336 [Motor OL Factor], Par 337 [Mtr I2T Curr Min], Par 338 [Mtr I2T Spd Min] and Par 339 [Mtr I2T Calibrat].	• Reduce mechanical load • Enter correct motor nameplate full load amps Par 2 [Motor NP FLA] Configured with Par 371 [Mtr OL Trip Cnfg]

No.	Name	Type[1]	Description	Action
12	Motor OLoad Pend	2	A motor overload is pending. Par 308 [Output Current] is squared, scaled and integrated over time. When this integrated value exceeds 0.5, this exception event occurs. The integrator's output can be viewed in Par 330 [Fault TP Data] when Par 329 [Fault TP I] is set to 13 "Mtr OL Outpt". The overload integration rate is affected by Par 336 [Motor OL Factor], Par 337 [Mtr I2T Curr Min], Par 338 [Mtr I2T Spd Min] and Par 339 [Mtr I2T Calibrat].	• Reduce the mechanical load. • Enter correct motor nameplate full load amps Par 2 [Motor NP FLA]. Configured with Par 371 [Mtr OL Trip Cnfg].
13	Motor Stalled	2	The motor has stalled. The three conditions listed below have occurred at the same time for the amount of time specified in Par 373 [Motor Stall Time]: 1. The drive is not stopped (Par 150 [Logic State Mach] is not equal to zero). 2. The drive is on limit (Par 304 [Limit Status] is not equal to zero). 3. The drive is at zero speed (Par 155 [Logic Status], bit 13 "At Zero Spd" is set).	• Increase the torque limit. • Reduce the mechanical load. Configured with Par 374 [Motor Stall Cnfg].
14	Inv OTemp Pend	2	Par 313 [Heatsink Temp] is within 10°C of maximum. View the maximum heat sink temperature in Par 348 [Drive OL TP Data] when Par 347 [Drive OL TP I] is set to 30 "fMaxHsDegc".	• Reduce the mechanical load. • Lower the ambient temperature. Configured with Par 375 [Inv OT Pend Cnfg].
15	Inv OTemp Trip	1	Par 313 [Heatsink Temp] is above the maximum limit or a temperature sensor has failed (shorted or open). See Par 346 [Drive OL Status], bit 0 "NTC Shorted" and bit 1 "NTC Open". Or, the calculated junction temperature (displayed in Par 345 [Drive OL JnctTmp]) of the power semiconductors in the inverter has been exceeded.	• Reduce the mechanical load. • Lower the ambient temperature.
16	Inv OLoad Pend	2	The drive's operating point is approaching the intermittent current rating limitation. If output current remains at or above present levels, an inverter overload condition will occur.	Reduce the load on the drive. Configured with Par 376 [Inv OL Pend Cnfg].
17	Inv OLoad Trip	2	The drive's operating point has exceeded the intermittent current rating and a foldback to the continuous rating in Par 400 [Rated Amps] has occurred.	Reduce the mechanical load. Configured with Par 377 [Inv OL Trip Cnfg].
18	Ext Fault Input	2	A digital input has detected an external fault.	Enter a value of 3 "Ext Fault" or 38 "ExtFault Inv" in one of the following parameters to configure an input to detect an external fault: • Par 825 [Digin 1 Sel] • Par 826 [Digin 2 Sel] • Par 827 [Digin 3 Sel] • Par 828 [Dig In4 Sel] • Par 829 [Dig In5 Sel] • Par 830 [Dig In6 Sel] Configured with Par 379 [Ext Flt/Alm Cnfg].
19	DSP Memory Error	1	Flash memory does not match the SRAM memory.	Cycle the drive power. If the fault remains, replace the Main Control board.
20	DSP Device Error	1	A DSP (Velocity Position Loop) interrupt task has not been completed in the allotted time.	Cycle the drive power. If the fault remains, replace the Main Control board.
22	Over Frequency	1	The Encoderless algorithm failed to converge on the correct speed. Two possible causes include: 1. The Velocity regulator is attempting to run below the motor's slip speed. 2. The Frequency regulator "pulls out" and the commanded motor frequency slows to the maximum frequency limit.	
23	MC Commissn Fail	1	The drive has failed to complete either the Motor Autotuning procedure or the Power Circuits Diagnostics test. Par 463 [MC Diag Error 1], Par 464 [MC Diag Error 2], and Par 465 [MC Diag Error 3] display Motor Autotuning and Power Circuit Diagnostic faults. Par 465 [MC Diag Error 3] - Drive current, inductance, voltage and speed are not within motor nameplate specifications. This fault occurs most frequently on low horsepower motors.	• Verify that the motor nameplate data is entered correctly into the drive. • Verify that the motor is wired for the correction voltage entering into the drive. • Verify that the encoder (if used) and velocity feedback is correct. • Change the tuning mode in Par 515 [FVC Tune Config] to 9 "NoRotate Tune".
24	DC Bus Overvolt	1	A DC Bus overvoltage has occurred.	• Verify the AC Line. • Verify that either the brake or bus regulator is enabled (Par 414 [Brake/Bus Cnfg], bit 0 "Brake Enable" or bit 3 "Bus Reg Enable", respectively). • Verify that Par 128 [Regen Power Lim] is set properly. • If Par 414 [Brake/Bus Cnfg] bit 0 "Brake Enable" is set, verify that the braking resistor is properly sized.
25	Inv Trans Desat	1	The IGBT detects a transistor failure (Desaturation).	

No.	Name	Type[1]	Description	Action
26	Ground Fault	1	A current to earth exceeds 35% of the peak drive rating.	Check the motor and external wiring to the drive output terminals for a grounded condition.
27	Inst Overcurrent	1	The instantaneous motor current exceeds 214% of the rating.	• Reduce the mechanical load. • Check the motor and external wiring to the motor.
28	VPL/MC Comm Fail	1	A communication failure has occurred between the Velocity Position Loop (VPL) processor and the Motor Control (MC) processor on the main control board. Possible cause are: • The VPL is flashing the MC firmware into the MC processor when HIM indicates "Loading Config". • The MC has failed to complete or pass diagnostic tests. • The MC has not detected VPL handshake activity for over 32 ms. • The VPL has not detected MC handshake activity for over 32 ms. This is indicated when Fault Test Point 15 or 16 equals 1. This test point is viewed in Par 330 [Fault TP Data] when Par 329 [Fault TP select] is set to value 15 or 16.	• Cycle power to the drive. • Reflash the firmware. • Replace the Main Control board.
29	PWM Signal Short	1	This fault is detected when ever the actual IGBT gate is different than the commanded IGBT states. This fault is detected by the Motor Control (MC) processor.	
30	MC Firmware	1	One of the following Motor Control (MC) firmware errors has occurred: • MC Task Over Run • Illegal Interrupt • Self Diagnostic Fault • Data Error	• Cycle power to the drive. • Reflash the firmware. • Replace the Main Control board.
31	Precharge Error	2	The precharge function has failed to complete within 30 seconds (default) of the precharge request. The precharge time out is configurable in Par 410 [PreChrg TimeOut]. A precharge request is initiated when the DC Bus voltage is above the Undervoltage Trip level and the precharge input is high (the requirement for the precharge being high can be bypassed by setting Par 411 [PreChrg Control], bit 01 "PreChrg Enable" to 0 "Off").	• Verify the value in Par 410 [PreChrg TimeOut]. • Verify the bit value in Par 411 [PreChrg Control] = 1 "Enbl PrChrg". Configured with Par 381 [PreChrg Err Cnfg]
32	PWM Asynch	1	The Motor Control Processor is not synchronized with SynchLink.	
33	+/- 15volt Power	1	The12V DC control voltage is outside the tolerance range. The positive voltage power must be within the band from +17.00 to +11.61V DC. The negative voltage power must be within the band from -17.00 to -11.61V DC.	Replace switch mode power supply. For smaller frames, replace drive.
35	Parameter Chksum	1	The checksum read from the EEPROM does not match the checksum calculated	• Cycle power to the drive. • Replace the Main Control board.
38	Brake OL Trip	2	The calculated temperature of the dynamic braking resistor is too high. The temperature is calculated by a thermal model. If the resistor is internal, the model uses the resistor characteristics stored in the power structure EEPROM memory. If the resistor is external, the model uses values of Par 416 [Brake PulWatts] and Par 417 [Brake Watts].	Verify actual temperature of brake: • If hot, wait for the brake to cool. • If cold, cycle power to the drive. If cold, verify that the values of Par 416 [Brake PulWatts] and Par 417 [Brake Watts] are correct. Configured with Par 369 [Brake OL Cnfg].
39	PowerEE CRC Fail	1	The Cycling Ring Checksum (CRC) of the data stored in the Power Board EEPROM does not match the stored CRC.	Cycle power to the drive. In frame 9…14 drives, check the communication bus lines - 10 pin connector on the Main Control board, Fiber Optic Power Interface board, and fiber optic cable connections.
40	SLink Mult Oflow	2	A SynchLink Multiplier Overflow has occurred. Par 927 [SL Mult State] displays SynchLink multiplier overflow errors.	Configured with Par 390 [SL MultErr Cnfg].
41	Ridethru Timeout	1	The drive has been in a bus loss ridethrough condition for more than two seconds (default). The ridethrough timeout is configurable in Par 407 [Power Loss Time].	• Verify the AC Line. • Verify the value in Par 407 [Power Loss Time].
42	DC Bus Undervolt	2	The Bus voltage has fallen below the level configured in Par 409 [Line Undervolts].	Verify the AC Line. In frames 1…4 and 9…14, verify that the precharge resistor is present (with power off, there should be a resistance between DC+ and BR+). In frames 5 & 6, check the precharge board for errors. See the precharge board LED for fault sequence. Configured with Par 393 [BusUndervoltCnfg].

No.	Name	Type[1]	Description	Action
43	VoltageFdbk Loss	2	A loss of motor or DC Bus voltage feedback has occurred because of a communication failure between Motor Control and Voltage Feedback board.	• Check the communication line between Motor Control (MC) and the Voltage Feedback board. • Replace the Voltage Feedback board. Configured with Par 394 [VoltFdbkLossCnfg].
44	Runtime Data Rst	3	Runtime data (hours, energy) has been reset to zero due to a checksum error.	(Informational Only)
45	Enable Health	1	The safety circuit is active.	Check the input signal to the safety circuit.
46	Interp Out Synch	2	The interpolator for position feedback lost synchronization with the Velocity Position Loop (VPL).	Configured with Par 378 [Interp Flt Cnfg].
47	MC CML Task Fail	3	The Current Minor Loop (CML) task has been delayed or run with an incorrect interval.	Cycle power to the drive.
48	No Ctrl Device	1	The controlling device (HIM or controller) has been disconnected while the drive was running.	Check the controlling device connections to the drive.
49	DPI Loss Port 1	2	The device at DPI port 1 has stopped communicating with the drive. A SCANport device is connected to a drive operating DPI devices at 500k Baud.	Verify that the DPI device is present and functional at port 1. Configured with Par 391 [DPI CommLoss Cfg].
50	DPI Loss Port 2	2	The device at DPI port 2 has stopped communicating with the drive. A SCANport device is connected to a drive operating DPI devices at 500k Baud.	Verify that the DPI device is present and functional at port 2. Configured with Par 391 [DPI CommLoss Cfg].
51	DPI Loss Port 3	2	The device at DPI port 3 has stopped communicating with the drive. A SCANport device is connected to a drive operating DPI devices at 500k Baud.	Verify that the DPI device is present and functional at port 3. Configured with Par 391 [DPI CommLoss Cfg].
52	DPI Loss Port 4	2	The device at DPI port 4 has stopped communicating with the drive. A SCANport device is connected to a drive operating DPI devices at 500k Baud.	Verify that the DPI device is present and functional at port 4. Configured with Par 391 [DPI CommLoss Cfg].
53	DPI Loss Port 5	2	The device at DPI port 5 has stopped communicating with the drive. A SCANport device is connected to a drive operating DPI devices at 500k Baud.	Verify that the DPI device is present and functional at port 5. Configured with Par 391 [DPI CommLoss Cfg].
54	DPI Loss Port 6	2	The device at DPI port 6 has stopped communicating with the drive. A SCANport device is connected to a drive operating DPI devices at 500k Baud.	Verify that the DPI device is present and functional at port 6. Configured with Par 391 [DPI CommLoss Cfg].
55	Net Loss DPI P1	2	A communications fault has occurred between the communication adapter at DPI port 1 and the network.	Verify the network connection. Verify the status of network. Configured with Par 392 [NetLoss DPI Cnfg].
56	Net Loss DPI P2	2	A communications fault has occurred between the communication adapter at DPI port 2 and the network.	Verify the network connection. Verify the status of network. Configured with Par 392 [NetLoss DPI Cnfg].
57	Net Loss DPI P3	2	A communications fault has occurred between the communication adapter at DPI port 3 and the network.	Verify the network connection. Verify the status of network. Configured with Par 392 [NetLoss DPI Cnfg].
58	Net Loss DPI P4	2	A communications fault has occurred between the communication adapter at DPI port 4 and the network.	Verify the network connection. Verify the status of network. Configured with Par 392 [NetLoss DPI Cnfg].
59	Net Loss DPI P5	2	A communications fault has occurred between the communication adapter at DPI port 5 and the network.	Verify the network connection. Verify the status of network. Configured with Par 392 [NetLoss DPI Cnfg].
60	Net Loss DPI P6	2	A communications fault has occurred between the communication adapter at DPI port 6 and the network.	Verify the network connection. Verify the status of network. Configured with Par 392 [NetLoss DPI Cnfg].
61	Logix Out of Run	2	The DriveLogix controller is in a Non-Run mode. Non-Run modes include program, remote-program and faulted modes.	Clear the fault. Configured with Par 386 [Lgx OutOfRunCnfg].
62	Logix Timeout	2	The communication connection to the DriveLogix controller has timed out.	Configured with Par 387 [Lgx Timeout Cnfg].
63	Logix Closed	2	The DriveLogix controller has closed the Controller to Drive connection.	Verify that the Drive is present in the Controller I/O configuration. Configured with Par 388 [Lgx Clod Cnfg].
64	Logix Link Chng	2	A required link in the Controller to Drive Communication Format has been modified.	Clear the fault. Configured with Par 389 [Lgx LinkChngCnfg].
65	HiHp In PhaseLs	2	*(High Horse Power Only)* AC Input Phase Loss - the AC input phase voltage has fallen.	• Check for voltage on each AC input phase. • Check the status of each external AC input fuse. Configured with Par 370 [HiHp InPhsLs Cfg].

No.	Name	Type[1]	Description	Action
66	HiHp Bus Com Dly	1	*(High Horse Power Only)* Bus Communication Time Delay - the communication bus has delayed feedback or bad communication quality.	Check the communication bus lines - 10 pin connector on the Main Control board, Fiber Optic Power Interface board, and fiber optic connections.
67	HiHp Bus Link Ls	1	*(High Horse Power Only)* Bus Communication Link Loss - bus communication between the Fiber Optic Power Interface board and the Voltage Feedback board has stopped.	Check the communication bus lines - 10 pin connector on the Main Control board, Fiber Optic Power Interface board, and fiber optic connections.
68	HiHp Bus CRC Er	1	*(High Horse Power Only)* Bus Communication CRC Error - too many Cycling Ring Checksum (CRC) errors have occurred in the communication bus. A fast power cycle may cause the 700S Main Control board to attempt to communicate with the ASIC board before the ASIC board is energized.	Check the communication bus lines - 10 pin connector on the Main Control Board, Fiber Optic Power Interface board, and fiber optic connections.
69	HiHp Bus WtchDog	1	*(High Horse Power Only)* Bus Communication Watchdog Error, No message (packets) came through in the communication bus - a watchdog error was detected.	Check the communication bus lines - 10 pin connector on the Main Control board, Fiber Optic Power Interface board, and fiber optic connections.
70	HiHp Fan Fdbk Ls	1	*(High Horse Power Only)* Fan Feedback Loss - an inverter cooling fan did not send active feedback or did not work.	• Check the communication bus lines - 10 pin connector on the Main Control board, Fiber Optic Power Interface board, and fiber optic connections. • Check the inverter cooling fans.
71	HiHp Drv OvrLoad	1	*(High Horse Power Only)* Drive Overload - the drive's operating point has exceeded the intermittent current rating and a foldback to the continuous rating in Par 400 [Rated Amps] has occurred.	Reduce the mechanical load.
72	HiHp PwrBd PrcEr	1	*(High Horse Power Only)* Power Board Processor Error - a processor on the Fiber Optic Power Interface circuit board has detected a self diagnostic problem.	Replace the Fiber Optic Power Interface board.
73	HiHp PrChrg Cntc	1	*(High Horse Power Only)* Precharge Contactor Fault - the precharge contactor did not send back active feedback.	• If the drive has AC input, check the precharge resistor and contactor. • If the drive has DC input, check the jumper for precharge bypass switch on the Fiber Optic Power Interface board.
74	HiHp PwrEE Error	1	*(High Horse Power Only)* Power EEPROM Error - the Cycling Ring Checksum (CRC) of the data stored in the Fiber Optic Power Interface board's EEPROM does not match the stored CRC.	• Cycle power to the drive. • Check the communication bus lines - 10 pin connector on the Main Control board, Fiber Optic Power Interface board, and fiber optic connections.
75	HiHP PwrBd Otemp	1	*(High Horse Power Only)* Power Board Over Temperature - the temperature of the Fiber Optic Power Interface board has exceeded 85° C.	Lower the ambient temperature.
76	HiHP HardwareVer	3	(*High Horse Power Star-coupler Frame 12 & 14 Drives Only*) The left and right side inverter units have different current ratings or the ASIC board or the Fiber Optic Power Interface board is not functioning.	Check the version of each inverter (left and right units), then replace the unit.
77	HiHP CurrUnbInce	3	(*High Horse Power Star-coupler Frame 12 & 14 Drives Only*) The output current between the left and right side inverter units are unbalanced (20% of current feedback rating, e.g. 184A = 920A * 0.2).	Check the motor wiring for each unit.
78	HiHP VoltUnbInce	3	(*High Horse Power Star-coupler Frame 12 & 14 Drives Only*) The bus voltage for the left and right side inverter units is unbalanced (6% of normal bus voltage, e.g. 41Vdc = 675Vdc * 0.06).	Check the input power and wiring for each unit.
79	HiHP Bus Data	3	(*High Horse Power Star-coupler Frame 12 & 14 Drives Only*) Communication Bus data are mismatched between the left and right side unit.	Check communication bus lines - 10 pin connector on Main Control board, Fiber Optic Power Interface board and fiber optic connections.
81	+ Soft Over Trvl	2	*(Motion Only)* The position feedback exceeds the maximum positive travel setting in Par 694 [Motn Mx Pos Trvl].	Configured with Par 395 [+Sft OvrTrvlCnfg].
82	- Soft Over Trvl	2	*(Motion Only)* The position feedback exceeds the maximum negative travel setting in Par 695 [Motn Mx Neg Trvl].	Configured with Par 396 [-Sft OvrTrvlCnfg].
83	+ Hard Over Trvl	2	*(Motion Only)* The signal for the hardware positive over travel appears on a digital input.	Configured with Par 397 [+Hrd OvrTrvlCnfg].
84	- Hard Over Trvl	2	*(Motion Only)* The signal for the hardware negative over travel appears on a digital input.	Configured with Par 398 [-Hrd OvrTrvlCnfg].

No.	Name	Type[1]	Description	Action
85	Position Error	2	*(Motion Only)* The value of Par 769 [Position Error] exceeded the value of Par 696 [Motn PositErrTol].	Verify the value in Par 696 [Motn PositErrTol]. Configured with Par 399 [Position ErrCnfg].
86	Drive Homing	3	When the drive is in Drive Homing mode (Par 740 [Position Control], bit 24 or bit 27 is On), the Drive Homing Alarm triggers and the drive moves to a home position automatically.	Check Par 740 [Position Control], bit14 "Find Home" or bit 27 "Return Home".
88	Stahl Optics	3	The Linear Stahl encoder detected a fault. Par 291 [Lin1Stahl Status] displays the details of the fault.	• Reconnect encoder or replace encoder. • Reconnect option feedback card.
89	Drv Waking	3	The Wake timer is counting toward a value that will start the drive.	
92	Ride Thru	3	The Bus voltage has dropped to the Ride-Through level specified in Par 408 [Power Loss Level].	Check the AC input voltage and the DC bus voltage.
93	+/- 12volt Power Alarm	3	The12V DC control voltage is outside the tolerance range (Alarm). The positive voltage power exceeds +15.50 V DC. The negative voltage power exceeds -15.50V DC.	
94	Analog In 1 Loss	1	Analog Input channel 1 is lost. For configuration of Analog Input channel 1, see Par 1093 [Anlg In1LossCnfg].	• Check condition of Analog Input channel 1. • Change configuration for parameter 1093 [Anlg In1LossCnfg].
95	Analog In 2 Loss	1	Analog Input channel 2 is lost. For configuration of Analog Input channel 2, see Par 1094 [Anlg In2LossCnfg].	• Check condition of Analog Input channel 2. • Change configuration for parameter 1094 [Anlg In2LossCnfg].
96	Analog In 3 Loss	1	Analog Input channel 3 is lost. For configuration of Analog Input channel 3, see Par 1095 [Anlg In3LossCnfg].	• Check condition of Analog Input channel 3. • Change configuration for parameter 1095 [Anlg In3LossCnfg].
129	Faults Cleared	*	Indicates that all faults have been cleared.	*Informational only.
130	Fault Q Cleared	*	Indicates that the fault queue has been cleared.	*Informational only.
131	Alarm Cleared	*	Indicates that all alarms have been cleared.	*Informational only.
132	Alarm Q Cleared	*	indicates that the alarm queue has been cleared.	*Informational only.

(1) Refer to Table 6 on page 142 for Fault Type Descriptions.

For Allen-Bradley Drives Technical Support:

Title	Online at…
Allen-Bradley Drives Technical Support	http://www.rockwellautomation.com/literature **or** Call M-F, 7:00a.m. to 6:00p.m. Central STD time: 1.262.512.8176

For Automation and Control Technical Support:

Title	Online at…
Rockwell Automation Technical Support	http://support.rockwellautomation.com/knowledgebase

Table 8 - Fault/Alarm Description Cross Reference

Fault/Alarm	No.
+/- 12volt Power Alarm	93
+/- 15volt Power	33
+ Hard Over Trvl	83
- Hard Over Trvl	84
+ Soft Over Trvl	81
- Soft Over Trvl	82
Abs Ovespd Det	1
Alarm Cleared	131
Alarm Q Cleared	132
Analog In 1 Loss	94
Analog In 2 Loss	95
Analog In 3 Loss	96
Brake OL Trip	38
DC Bus Overvolt	24
DC Bus Undervolt	42
DPI Loss Port 1	49
DPI Loss Port 2	50
DPI Loss Port 3	51
DPI Loss Port 4	52
DPI Loss Port 5	53
DPI Loss Port 6	54
Drive Homing	83
Drive Power Loss	10
Drv Waking	89
DSP Device Error	20
DSP Memory Error	19
Enable Health	45
Encoder 0 Loss	3
Encoder 1 Loss	4
Ext Fault Input	18
Faults Cleared	129
Fault Q Cleared	130
Ground Fault	26
HiHp Bus Com Dly	66
HiHp Bus CRC Er	68
HiHP Bus Data	79
HiHp Bus Link Ls	67
HiHp Bus WtchDog	69
HiHP CurrUnblnce	77
HiHp Drv OvrLoad	71
HiHp Fan Fdbk Ls	70
HiHP HardwareVer	76
HiHp In PhaLs	65
HiHp PrChrg Cntc	73
HiHP PwrBd Otemp	75
HiHp PwrBd PrcEr	72

Fault/Alarm	No.
HiHp PwrEE Error	74
HiHP VoltUnblnce	78
Inst Overcurrent	27
Interp Out Synch	46
Inv OLoad Pend	16
Inv OLoad Trip	17
Inv OTemp Pend	14
Inv OTemp Trip	15
Inv Trans Desat	25
Logix Clod	63
Logix Link Chng	64
Logix Out of Run	61
Logix Timeout	62
MC CML Task Fail	47
MC Commissn Fail	23
MC Firmware	30
Motor OLoad Pend	12
Motor OLoad Trip	11
Motor Stalled	13
Net Loss DPI P1	55
Net Loss DPI P2	56
Net Loss DPI P3	57
Net Loss DPI P4	58
Net Loss DPI P5	59
Net Loss DPI P6	60
No Ctrl Device	48
Opt Port 0 Loss	5
Opt Port 1 Loss	6
Over Frequency Fault	22
Parameter Chksum	35
Params Defaulted	7
Position Error	85
PowerEE CRC Fail	39
Precharge Error	31
PWM Asynch	32
PWM Signal short	29
Ridethru Timeout	41
Ride Thru	92
Runtime Data Rst	44
SLink Comm Fail	9
SLink HW Fail	8
SLink Mult Oflow	40
Stahl Optics	88
VoltageFdbk Loss	43
VPL/MC Comm Fail	28
Vref Decel Fail	2

Notes:

Human Interface Module Overview

This section provides information on using the PowerFlex® 7-Class (DPI) Human Interface Module (HIM). Refer to the PowerFlex 20-HIM-A6 and 20-HIM-C6S HIM User Manual, publication 20HIM-UM001, for information on using the Enhanced HIM (if installed).

External and Internal Connections

The PowerFlex 700S provides a cable connection for a hand-held HIM or Port Expander/Splitter (Frame 1 shown).

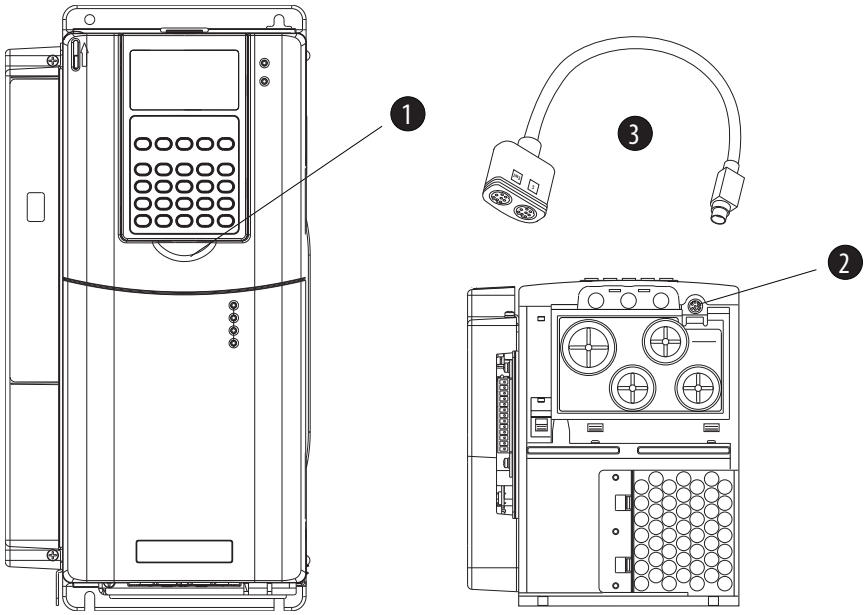

No.	Connector	Description
1	DPI Port 1	HIM connection when installed in cover.
2	DPI Port 2	Cable connection for handheld and remote options.
3	DPI Port 3 or 2	Splitter cable connected to DPI Port 2 provides additional port.

LCD Display Elements

Display	Description
F> | Power Loss | Auto	Direction | Drive Status | Alarm | Auto/Man | Information
0.0 RPM	Commanded or Output Speed
Main Menu: Diagnostics Parameter Device select	Programming / Monitoring / Troubleshooting

HIM Key Functions

Key	Description	
Esc	Exit a menu, cancel a change to a parameter value, or acknowledge a fault/alarm.	
Sel	Select a digit, select a bit, or enter edit mode in a parameter screen.	
▲	Scroll through options, increase a value, or toggle a bit.	
▼	Scroll through options, decrease a value, or toggle a bit.	
↵	Enter a menu, enter edit mode in a parameter screen, or save a change to a parameter value.	
ALT	Access the function associated with a programming or numeric key. Provides access to the Large Format Display.	
|	Start the drive.	
○	Stop the drive or clear a fault.	
Jog	Jog the drive.	
	Change direction.	The keys are active only when the HIM is granted Manual Control or Par 27 [Speed Ref A I] / 28 [Speed Ref B I] is set to: Option 12 "DPI Port 1" for a HIM installed in the drive cover or Option 13 "DPI Port 2" for a HIM connected by cable for handheld or remote installation option
	Increase speed.	
	Decrease speed.	

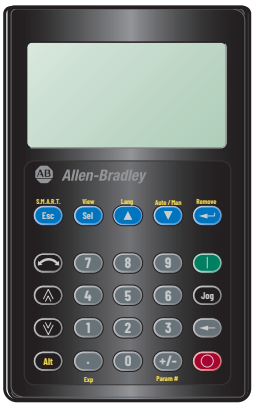

Human Interface Module (HIM)

Alternate (ALT) Functions

Follow these steps to use an ALT function.

1. Press the ALT key and release it.
2. Press the programming key for the desired function as identified in Table 9.

Table 9 - ALT Key Functions

ALT Key and then …			Function
ALT	Esc	S.M.A.R.T.	Function not available.
	Sel	View	Allows the selection of how parameters will be viewed or detailed information about a parameter or component.
	▲	Lang	Function not available.
	▼	Auto/Man	Function not available.
	↵	Remove	Allows HIM removal without causing a fault if the HIM is not the last controlling device and does not have manual control of the drive.
	.	Exp	Allows the value to be entered as an exponent.
	+/–	Param #	Allows entry of a parameter number for viewing/editing.

Access the Start-Up Routine

The start-up routine asks simple yes or no questions and prompts you to input required information. To access the Start-Up routine from the User Display screen:

1. On the User Display screen, press Esc.

   The Main menu displays.
2. Use the ▼ key to scroll to "Start-Up" in the list and press ↵.
3. select "Continue" and press ↵.

   The PowerFlex 700S Start-Up screen displays.
4. Follow the prompts as necessary.

Menu Structure

Figure 2 - HIM Menu Structure

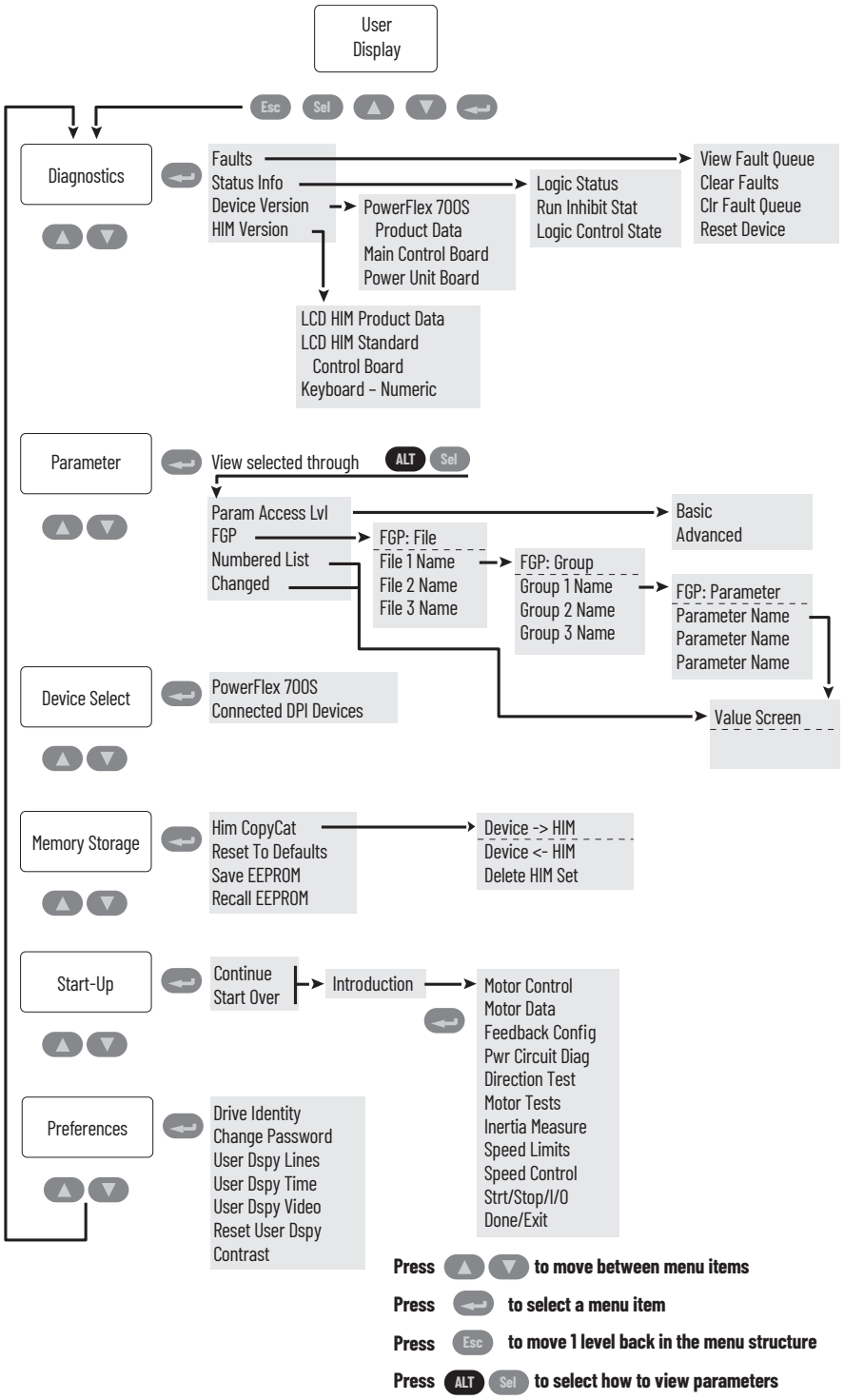

Diagnostics Menu

When a fault trips the drive, use this menu to access detailed data about the drive.

Option	Description
Faults	View the fault queue or fault information, clear faults or resets the drive.
Status Info	View parameters that display status information about the drive.
Device Version	View the firmware version and hardware series of components.
HIM Version	View the firmware version and hardware series of the HIM.

Parameter Menu

Refer to View and Edit Parameters on page 156.

Device Select Menu

Use this menu to access parameters in connected peripheral devices.

Memory Storage Menu

Drive data can be saved to, or recalled from, the HIM or EEPROM. EEPROM is permanent non-volatile drive memory. HIM sets are files stored in permanent non-volatile HIM memory.

Option	Description
HIM Copycat Device -> HIM Device <- HIM	Save data to a HIM set, load data from a HIM set to active drive memory or delete a HIM set.
EEPROM	Save data to EEPROM, load data from EEPROM to active drive memory or name a User set.
Reset To Defaults	Restore the drive to its factory-default settings.

IMPORTANT When loading data from a HIM set via the Copycat function, values for parameters 81 [Spd Reg P Gain] and 82 [Spd Reg I Gain] are re-calculated and overwritten due to parameter 90 [Spd Reg BW] being set to the default value of "10". To avoid overwriting the values of parameters 81 and 82, record the values before performing the Copycat from a HIM to the drive, manually update the values after the download and set parameter 90 to "0".

Start Up Menu

See Figure 1 on page 12.

Preferences Menu

The HIM and drive have features that you can customize.

Option	Description
Drive Identity	Add text to identify the drive.
Change Password	Enable/disable or modify the password.
User Dspy Lines	Select the display, parameter, scale and text for the User Display. The User Display is two lines of user-defined data that appears when the HIM is not being used for programming.
User Dspy Time	Set the wait time for the User Display or enable/disable it.
User Dspy Video	Select Reverse or Normal video for the Frequency and User Display lines.
Reset User Dspy	Return all the options for the User Display to factory default values.

The PowerFlex 700S drive is initially set to Basic Parameter View. To view all parameters, set parameter 196 [ParamAccessLvl] to option 1 “Advanced”. Parameter 196 is not affected by the Reset to Defaults function.

View and Edit Parameters

LCD HIM

Steps:	Key(s):	Example Displays”
1. In the Main Menu, press the Up Arrow or Down Arrow to scroll to “Parameter.”	▲ or ▼	
2. Press Enter. “FGP File” appears on the top line and the first three files appear below it.	↵	FGP: File Monitor Motor Control Dynamic Control
3. Press the Up Arrow or Down Arrow to scroll through the files.	▲ or ▼	
4. Press Enter to select a file. The groups in the file are displayed under it.	↵	FGP: Group Motor Data Monitoring Drive Config
5. Repeat steps 3 and 4 to select a group and then a parameter. The parameter value screen will appear.		
6. Press Enter to edit the parameter.	↵	FGP: Parameter Motor NP Volts Motor NP FLA Motor NP Hertz
7. Press the Up Arrow or Down Arrow to change the value. If desired, press Sel to move from digit to digit, letter to letter, or bit to bit. The digit or bit that you can change will be highlighted.	▲ or ▼ Sel	FGP: Par 2 Motor NP FLA 1.000 Amps [ALT][VIEW] -> Limits
8. Press Enter to save the value. If you want to cancel a change, press Esc.	↵	
9. Press the Up Arrow or Down Arrow to scroll through the parameters in the group, or press Esc to return to the group list.	▲ or ▼	FGP: Par 2 Motor NP FLA 1.500 Amps [ALT][VIEW] -> Limits

Numeric Keypad Shortcut

If using a HIM with a numeric keypad, press the ALT key and the +/– key to access the parameter by typing its number.

Parameter Links

Most parameter values are entered directly by the user. However, certain parameters can be "linked," so the value of one parameter becomes the value of another. For Example, the value of an analog input can be linked to [Accel Time 1]. Rather than entering an acceleration time directly (via HIM), the link allows the value to change by varying the analog signal. This can provide additional flexibility for advanced applications.

Each link has 2 components:

- Source parameter – sender of information.
- Destination parameter – receiver of information.

Most parameters can be a source of data for a link, except parameter values that contain an integer representing an ENUM (text choice). The are not allowed, since the integer is not actual data (it represents a value). Refer to the list of parameters in Chapter 2 Programming and Parameters for information on which parameters can be destinations. All links must be established between equal data types (parameter value formatted in floating point can only source data to a destination parameter value that is also floating point).

Establishing A Link

Steps:	Key(s):	Example Displays:
1. Select a valid destination parameter to be linked. The parameter value screen displays. 2. Press Enter to edit the parameter. The cursor will move to the value line. 3. Press ALT and then View (Sel). Next, press the Up or Down Arrow to change "Present Value" to "Define Link". Press Enter. 4. Enter the Source Parameter Number and press Enter. The linked parameter can now be viewed two different ways by repeating steps 1…4 and selecting "Present Value" or "Define Link." If an attempt is made to edit the value of a linked parameter, "Parameter is Linked!" will be displayed, indicating that the value is coming from a source parameter and cannot be edited. 5. To remove a link, repeat steps 1…5 and change the source parameter number to zero (0). 6. Press Esc to return to the group list.	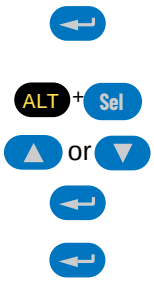	FG1: Parameter Accel Time 1 Decel Time 1 S Curve Time Min: 0.01000 Max: 6553.5 Dflt: 10.0 Present Value Define Link Parameter: #32 Accel Time 1 Link: 800 Analog In1 Data

Remove/Install the HIM

The HIM can be removed or installed while the drive is powered.

Steps:	Key(s):	Example Display:
To remove the HIM… 1. Press ALT and then Enter (Remove). The Remove HIM configuration screen appears. 2. Press Enter to confirm that you want to remove the HIM. 3. Remove the HIM from the drive or disconnect the cable. To install HIM… • Insert the HIM into drive or re-connect cable.	ALT + ↵	Remove Op Intrfc: Press Enter to Disconnect Op Intfc? (Port 2 Control)

Application Notes

For additional application notes, refer to the PowerFlex® 700S Adjustable Frequency AC Drive with Phase II Control Reference Manual, publication PFLEX-RM003.

DPI Communication Configurations

Typical Programmable Controller Configurations

IMPORTANT If programs are written that continuously write information to the drive, care must be taken to properly format the block transfer. If attribute 10 is selected for the block transfer, values will be written only to RAM and will not be saved by the drive. This is the preferred attribute for continuous transfers. If attribute 9 is selected, each program scan will complete a write to the drives non-volatile memory (EEprom). Since the EEprom has a fixed number of allowed writes, continuous block transfers will quickly damage the EEprom. Do Not assign attribute 9 to continuous block transfers. Refer to the individual communications adapter User Manual for additional details.

Logic Command Word

Logic Bits																	
15	14	13	12	11	10	9	8	7	6	5	4	3	2	1	0	Command	Description
															x	Normal Stop	0 = Not Normal Stop 1 = Normal Stop
														x		Start (1)	0 = Not Start 1 = Start
													x			Jog 1	0 = Not Jog using [Jog Speed 1] 1 = Jog using [Jog Speed 1]
												x				Clear Fault (2)	0 = Not Clear Fault 1 = Clear Fault
										x	x					Unipolar Direction	00 = No Command 01 = Forward Command 10 = Reverse Command 11 = Hold Direction Control
									x							Reserved	
								x								Jog 2	0 = Not Jog using [Jog Speed 2] 1 = Jog using [Jog Speed 2]
							x									Current Limit Stop	0 = Not Current Limit Stop 1 = Current Limit Stop
						x										Coast Stop	0 = Not Coast to Stop 1 = Coast to Stop
					x											Reserved	
				x												Reserved	
			x													Spd Ref l0	
		x														Spd Ref l1	
	x															Spd Ref l2	
x																Reserved	

Bits				
14	13	12		
0	0	0	=	Spd Ref A
0	0	1	=	Spd Ref B
0	1	0	=	Preset 2
0	1	1	=	Ref. 3 (Preset 3)
1	0	0	=	Ref. 4 (Preset 4)
1	0	1	=	Ref. 5 (Preset 5)
1	1	0	=	Ref. 6 (Preset 6)
1	1	1	=	Ref. 7 (Preset 7)

(1) A Not Stop condition (logic bit 0 = 0, logic bit 8 = 0, and logic bit 9 = 0) must first be present before a 1 = Start condition will start the drive.

(2) To perform this command, the value must switch from “0” to “1”.

Logic Status Word

Logic Bits																	
15	14	13	12	11	10	9	8	7	6	5	4	3	2	1	0	Status	Description
															x	Active	0 = Not Active 1 = Active
														x		Running	0 = Not Running 1 = Running
													x			Command Direction	0 = Reverse 1 = Forward
												x				Actual Direction	0 = Reverse 1 = Forward
											x					Accel	0 = Not Accelerating 1 = Accelerating
										x						Decel	0 = Not Decelerating 1 = Decelerating
									x							Jogging	0 = Not Jogging 1 = Jogging
								x								Fault	0 = No Fault 1 = Fault
							x									Alarm	0 = No Alarm 1 = Alarm
						x										Flash Mode	0 = Not in Flash Mode 1 = In Flash Mode
					x											Run Ready	0 = Not Ready to Run 1 = Ready to Run
				x												At Limit (1)	0 = Not At Limit 1 = At Limit
			x													Tach Loss Sw	0 = Not Tach Loss Sw 1 = Tach Loss Sw
		x														At Zero Spd	0 = Not At Zero Speed 1 = At Zero Speed
	x															At setpt Spd	0 = Not At Setpoint Speed 1= At Setpoint Speed
x																Enable	0 = Not Enabled 1 = Enabled

(1) See parameter 304 - [Limit Status] for a description of the limit status conditions.

DPI Device Limitations

PowerFlex 700S drives use a 450 mA device on the 12V DPI power supply. Due to the typical load of a external DPI device of 140 mA, there is a three DPI device limit.

Motor Control Mode

Parameter 485 [Motor Ctrl Mode] selects the type of motor control to use. This parameter is set during the HIM assisted startup when asked to select the Motor Control. The settings for Parameter 485 [Motor Ctrl Mode] are:

0 - "FOC" selects field oriented control. Field oriented control is used with AC squirrel cage induction motors for high performance.

1 - "FOC 1"selects field oriented control and is only used for a specific type of AC induction motor with motor thermal feedback. Note: "FOC 2" is used only for motors manufactured by Reliance Electric - Japan.

2 - "Pmag Motor" selects control for permanent magnet motors.

3 - "V/Hz" selects volts per hertz control. This selection is available in v2.003 and later.

4 - "Test" puts the drive in a test mode to perform the direction test. "Test" is automatically selected during the direction test portion of the Start-Up routine and does not need to be set manually by the user.

Field Oriented Control, Permanent Magnet Motor Control, and Volts/Hertz Control are described in further detail below.

Field Oriented Control

Field oriented control is used with AC squirrel cage induction motors for high performance. Motor data and an autotune is required for correct operation in this mode. Field oriented control is selected by setting parameter 485 [Motor Ctrl Mode] = 0 "FOC".

In field oriented control, the drive takes the speed reference that is specified by the Speed Reference selection Block and compares it to the speed feedback. The speed regulator uses Proportional and Integral gains to adjust the torque reference for the motor. This torque reference attempts to operate the motor at the specified speed. The torque reference is then converted to the torque producing component of the motor current.

This type of speed regulator produces a high bandwidth response to speed command and load changes. In field oriented control the flux and torque producing currents are independently controlled. Therefore, you can send a torque reference directly instead of a speed reference. The independent flux control also allows you to reduce the flux in order to run above base motor speed.

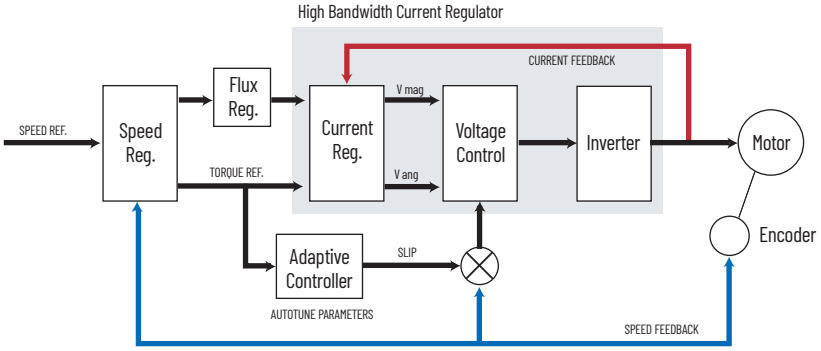

Permanent Magnet Control

Permanent magnet control is used with permanent magnet motors. Permanent magnet motor control is selected by setting parameter 485 [Motor Ctrl Mode] = 2 “Pmag Motor”.

- Permanent magnet motor control requires either a Hi-Resolution Stegmann encoder or compatible resolver feedback on the motor.
- Motor data and an autotune is required for correct operation in this mode. Refer to PowerFlex 700S Permanent Magnet Motor Specifications on page 199 for a list of compatible Allen-Bradley® permanent magnet motors and motor data to be used with the PowerFlex 700S Phase II drives.

Volts/Hertz Control - v2.003 and Later

Volts/Hertz control is used in fan, pump, or multi-motor applications. Volts/Hertz operation creates a fixed relationship between output voltage and output frequency.

Configuration:

Volts/Hertz control is selected by setting parameter 485 [Motor Ctrl Mode] = 3 “V/Hz”.

Volts/Hertz allows a wide variety of patterns using linear segments. The default configuration is a straight line from zero to rated voltage and frequency. This is the same volts/hertz ratio that the motor would see if it were started across the line. As seen in the diagram below, the volts/hertz ratio can be changed to provide increased torque performance when required. The shaping takes place by programming five distinct points on the curve:

1. Parameter 527 [Start/Acc Boost] is used to create additional torque for breakaway from zero speed and acceleration of heavy loads at lower speeds.
2. Parameter 528 [Run Boost] is used to create additional running torque at low speeds. The value is typically less than the required acceleration torque. The drive will lower the boost voltage to this level when running at low speeds (not accelerating). This reduces excess motor heating that could be caused if the higher start/accel boost level were used.
3. Parameters 529 [Break Voltage] and 530 [Break Frequency] are used to increase the slope of the lower portion of the Volts/Hertz curve, providing additional torque.
4. Parameters 1 [Motor NP Volts] and 3 [Motor NP Hertz] set the upper portion of the curve to match the motor design and mark the beginning of the constant horsepower region.

5. Parameters 531 [Maximum Voltage] and 532 [Maximum Freq] slope that portion of the curve used above base speed.

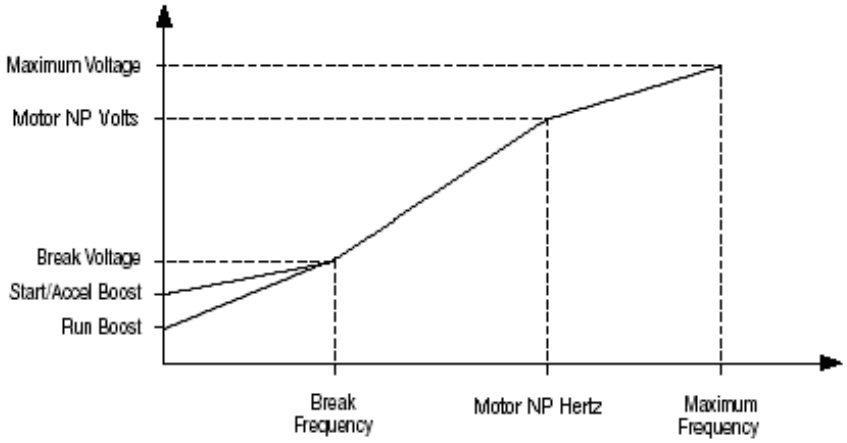

Motor Overload

Setting Parameter 338 [Mtr I2T Spd Min]

Parameter 338 [Mtr I2T Spd Min] sets the minimum speed for the motor overload (I^2T) function. This value determines the minimum speed the drive should run below the minimum current threshold set in parameter 337 [Mtr I2T Curr Min]. Parameters 338 [Mtr I2T Spd Min] and 337 [Mtr I2T Curr Min] set the first current/speed breakpoint. From this point the current threshold is linear to the value specified by the motor service factor set in parameter 336 [Motor OL Factor]. Set this parameter to the minimum value for the motor overload trip to vary in time at low speeds.

Figure 3 - Motor Overload Curve When Par 338 [Mtr I2T Spd Min] Is Less Than 1.0

When motor current exceeds the value of the curve, the motor overload output integrates. A motor overload exception event occurs when the value of the motor overload output reaches 1.0. The value of the motor overload output is visible in
Par 330 [Fault TP Data] when the value of Par 329 [Fault TP I] equals 13.

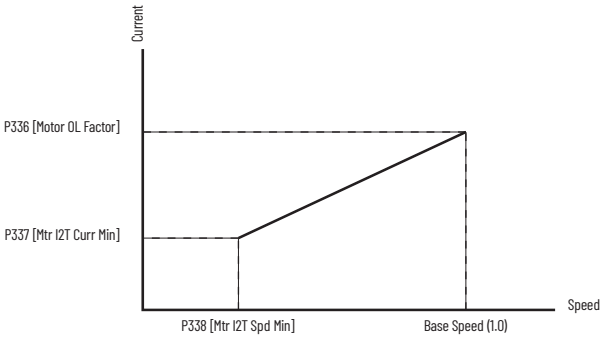

Figure 4 - Motor Overload Curve When Par 338 [Mtr I2T Spd Min] Is Equal To 1.0

When the value of Par 338 [Mtr I2T Spd Min] equals 1.0, the curve is flat - at the value of rated motor current times the value of Par 336 [Motor OL Factor]. If the motor current exceeds the value of the curve, the value of the motor overload output integrates. The value of the motor overload output is visible in Par 330 [Fault TP Data] when the value of Par 329 [Fault TP I] equals 13.

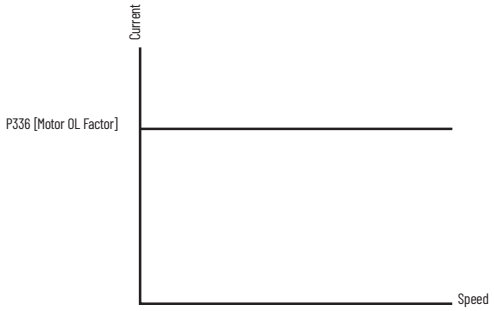

Motor Overload Memory Retention Per 2005 NEC

The PowerFlex 700S drive with Phase II control (firmware 3.001 and higher) has the ability to retain the motor overload count at power down per the 2005 NEC motor overtemperature requirement.

- To enable motor overload memory retention, set bit 20 “Motor OL Ret” of parameter 153 [Control Options] to “1”.
- To disable motor overload memory retention, set bit 20 “Motor OL Ret” of parameter 153 [Control Options] to “0”.

The motor overload count value can be viewed in parameter 341 [Mtr I2T Count].

Motors with Compatible Thermistor Ratings

Motor Type	Motor (kW)	Type (Catalog No.)(1)	Poles	Base Speed (RPM)	Voltage (Vrms)	Rated Current (Arms)	Ex. Current (Arms)	GD2 (Kg/m^2)
200 STD Motor	1.5	M-51027	4	1500	180	7.5	-	0.024
	2.2	M-51028	4	1500	180	11	-	0.045
	3.7	M-51001	4	1500	180	18	-	0.066
	3.7	M-51007-1	4	1500	180	18	-	0.066
	5.5	M-51002	4	1500	180	25	-	0.12
	5.5	M-51008-1	4	1500	180	25	-	0.12
	7.5	M-51003	4	1500	180	33	-	0.15
	7.5	M-51009-1	4	1500	180	33	-	0.15
	11	M-51004	4	1500	180	47	-	0.32
	11	M-51010-1	4	1500	180	47	-	0.32
	15	M-51005	4	1500	180	63	-	0.43
	15	M-51011-1	4	1500	180	63	-	0.43
	18.5	M-51012	4	1500	180	81	-	0.71
	18.5	M-51012-1	4	1500	180	81	-	0.71
	22	M-51013	4	1500	180	95	-	0.82
	22	M-51013-1	4	1500	180	95	-	0.82
	30	M-51050	4	1500	155	145	-	0.83
	37	M-51051	4	1500	155	183	-	1.1
	45	M-51052	4	1500	155	220	-	1.4
	55	M-51053	4	1500	155	265	-	2
	75	M-51054	4	1500	155	346	-	2.7
200 SVO Motor	0.75	M-51043	4	1500	140	5.3	-	0.0075
	1.5	M-51015	4	1500	140	11.4	-	0.0100
	2.2	M-51016	4	1500	140	15	-	0.0120
	3.7	M-51017	4	1500	140	24.5	-	0.0180
	5.5	M-51018	4	1500	140	34.8	-	0.0390
	7.5	M-51019	4	1500	140	44	-	0.0470
	11	M-51020	4	1500	140	67.1	-	0.0810
	15	M-51021	4	1500	140	80.7	-	0.1370
	22	M-51022	4	1500	140	120	-	0.2000
	30	M-51023	6	1000	155	176	-	0.5800
	37	M-51024	6	1000	155	210	-	0.7000
	55	M-51026	6	1000	135	334	-	1.1000
	55	M-51027	6	500	155	315	-	4.0000
400 STD Motor	1.5	MC-M2051	4	1500	320	4.7	2.0045	-
	2.2	MC-M2052	4	1500	320	6.3	3.24	-
	3.7	MC-M2053	4	1500	320	10	5.25	-
	5.5	MC-M2054	4	1500	320	15.5	8.8	-
	7.5	MC-M2055	4	1500	320	20.5	11.25	-
	11	MC-M2056	4	1500	320	29	14.3	-
	15	MC-M2057	4	1500	320	37	16.4	-
	18.5	MC-M2058	4	1500	320	45	19.65	-
	22	MC-M2059	4	1500	320	53	23	-
	30	MC-M2060	4	1500	320	71	28.15	-
	37	MC-M2061	4	1500	320	85	29.7	-
	45	MC-M2062	4	1500	320	97	30.55	-
	55	MC-M2063	4	1500	320	121	-	-
	75	MC-M2064	4	1500	320	163	-	-
	90	MC-M2065	4	1500	320	188	-	-
	110	MC-M2066	4	1500	320	227	-	-
	132	MC-M2067	4	1500	320	280	-	-
	160	MC-M2068	4	1500	320	335	-	-
	200	MC-M2069	4	1500	320	375	-	-

Motor Type	Motor (kW)	Type (Catalog No.)(1)	Poles	Base Speed (RPM)	Voltage (Vrms)	Rated Current (Arms)	Ex. Current (Arms)	GD2 (Kg/m^2)
400 SVO Motor	1.5	MC-M20	4	1500	280	5.4	-	-
	2.2	MC-M20	4	1500	280	7.3	-	-
	3.7	MC-M20	4	1500	280	12.3	-	-
	5.5	MC-M20	4	1500	280	17.3	-	-
	7.5	MC-M20	4	1500	280	22	-	-
	11	MC-M20	4	1500	280	34	-	-
	15	MC-M20	4	1500	280	42	-	-
	22	MC-M20	4	1500	280	58.5	-	-
	22	MC-M20	4	1500	280	58.5	-	-
	30	MC-M20	6	1000	280	88	-	-
	37	MC-M20	6	1000	280	125	-	-

(1) Manufacturer, Reliance Electric-Japan, catalog number for ordering.

Setpt 1 Data

Provides data for comparison of Par 172 [Setpt 1 Data] to Par 173 [Setpt1 TripPoint], driving bit 16 “At Setpt 1” of Par 155 [Logic Status].

Figure 5 - At Setpoint 1 Status

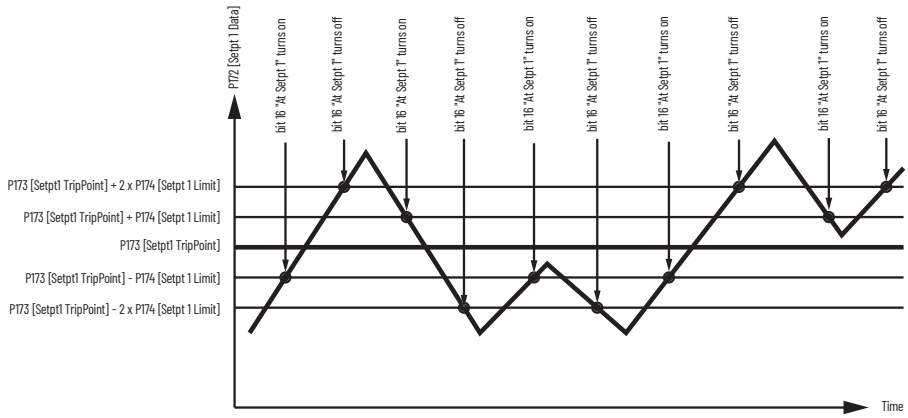

Setpt 2 Data

Provides data for comparison of Par175 [Setpt 2 Data] to Par 176 [Setpt2 TripPoint], driving bit 17 “Above Setpt 2” of Par 155 [Logic Status].

Figure 6 - Above Setpoint 2 Status

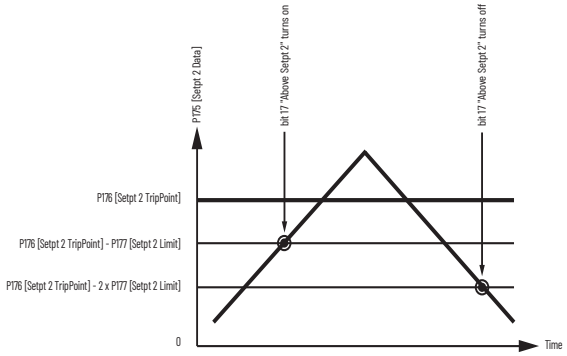

Stop Dwell Time

Sets an adjustable delay time between detecting zero speed and disabling the speed and torque regulators, when responding to a stop command.

IMPORTANT Consult industry and local codes when setting the value of this parameter.

Figure 7 - Drive Operation When Par 154 [Stop Dwell Time] Equals Zero

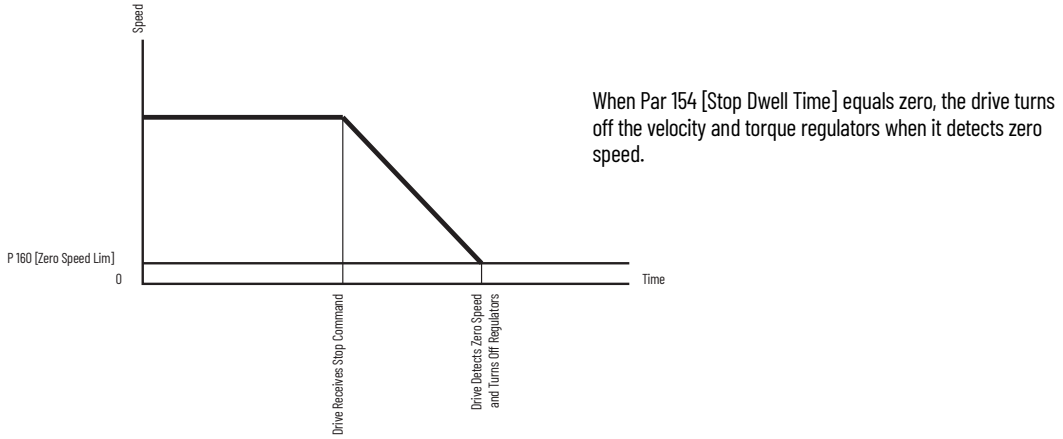

Figure 8 - Drive Operation When Par 154 [Stop Dwell Time] is Greater Than Zero

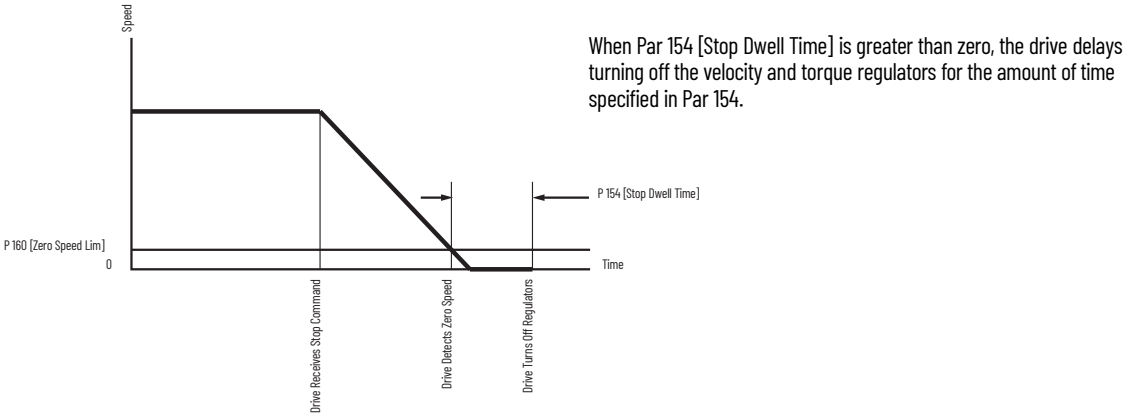

Sleep-Wake Mode

This function stops (sleep) and starts (wake) the drive based on separately configured analog input levels rather than discrete start and stop signals. When enabled in "Direct" mode, the drive will start (wake) when an analog signal is greater than or equal to the user specified [Wake Level], and stop the drive when an analog signal is less than or equal to the user specified [Sleep Level]. When Sleep-Wake mode is enabled for "Invert" mode, the drive will start (wake) when an analog signal is less than or equal to the user-specified [Wake Level], and stop the drive when an analog signal is greater than or equal to the user-specified [Sleep Level]. See Figure 9 on page 170 for more information on Sleep-Wake mode configuration.

Definitions

- Wake - A start command generated when the analog input value remains above [Wake Level] (or below when Invert mode is active) for a time greater than [Wake Time].
- Sleep - A Stop command generated when the analog input value remains below [Sleep Level] (or above when Invert mode is active) for a time greater than [Sleep Time].
- Speed Reference – The active speed command to the drive as selected by drive logic and [Speed Ref x Sel].
- Start Command - A command generated by pressing the Start button on the HIM, closing a digital input programmed for Start, Run, Run Forward or Run Reverse.

Figure 9 - Sleep-Wake Mode Flow Chart

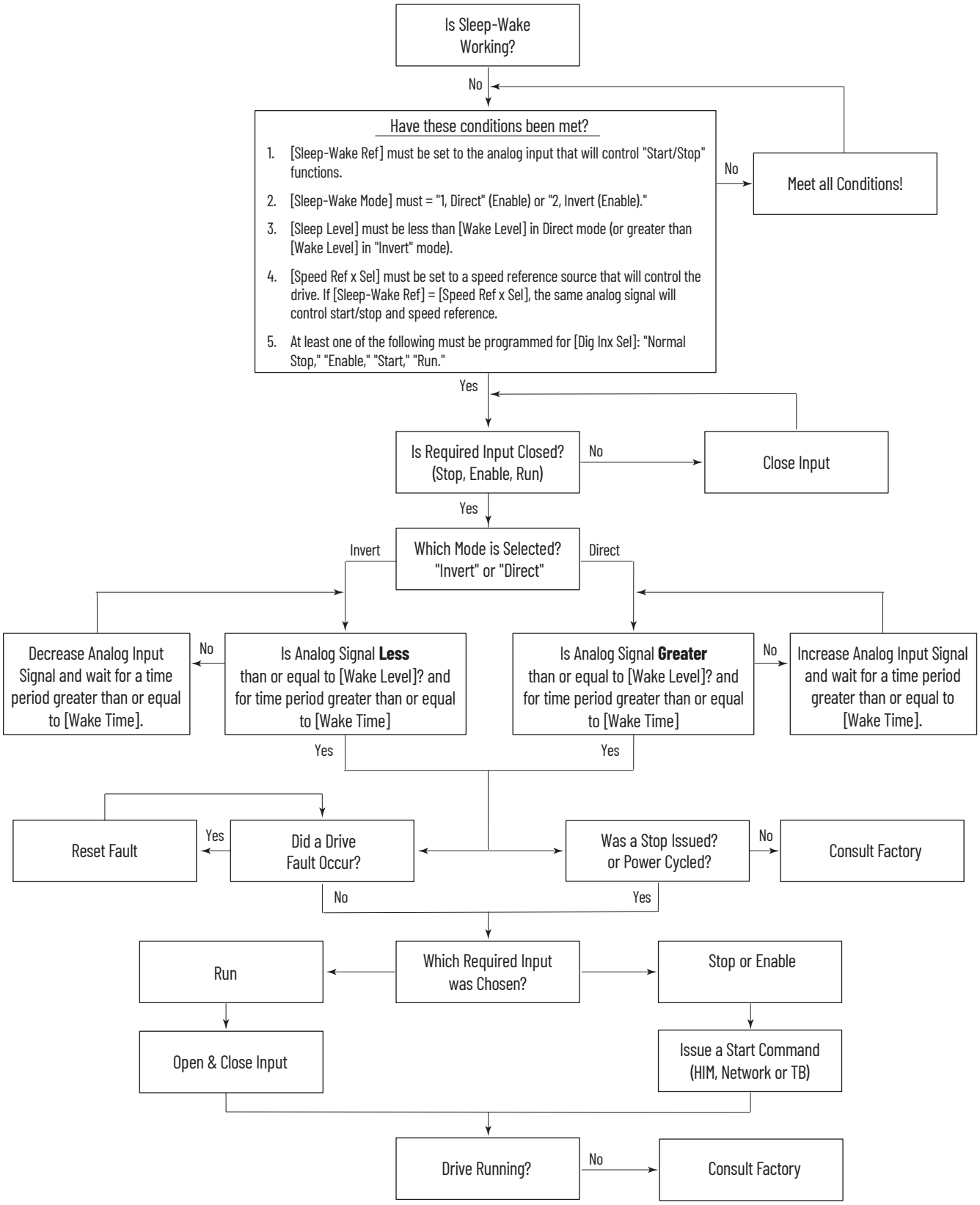

Control Block Diagrams

List of Control Block Diagrams

Flow diagrams on the following pages illustrate the drive's control algorithms.

Diagram Conventions and Definitions

Definitions of the Per Unit system:
1.0 PU Position = Distance traveled / 1 sec at Base Spd
1.0 PU Speed = Base Speed of the Motor
1.0 PU Torque = Base Troque of the Motor

Symbols:

Read Only Parameter

Read / Write Parameter

Read Only Parameter with Bit Enumeration

Read / Write Parameter with Bit Enumeration

Provides additional information

( ) = Enumerated Parameter
[ ] = Page and Coordinate
Ex. 3 A 2 = Page 3, Column A, Row 2
= Constant value

Processor Task time selection:

NOTE: Faster Task time selections may require program functions to be disabled to stay within processor load capabilities.

FW TaskTime Sel 146
FW TaskTime Actl 148

	val = 0	val = 1	val = 2
Task 1	0.5 mS	0.5 mS	0.25 mS
Task 2	2.0 mS	1.0 mS	1.0 mS
Task 3	8.0 mS	8.0 mS	8.0 mS

* Important:

(1) Parameter 147 [FW Functions EN] is used to activate and deactivate firmware functions. The PowerFlex 700S drives ships with the position regulator deactivated. To enable the position regulator, set Parameter 147, bit 16 to 1 "On".
(2) Parameter 1000 [UserFunct Enable] is used to activate and deactivate the User Functions.
(3) These diagrams are for reference only and may not accurately reflect all logical control signals; actual functionality is implied by the approximated diagrams. Accuracy of these diagrams is not guaranteed.

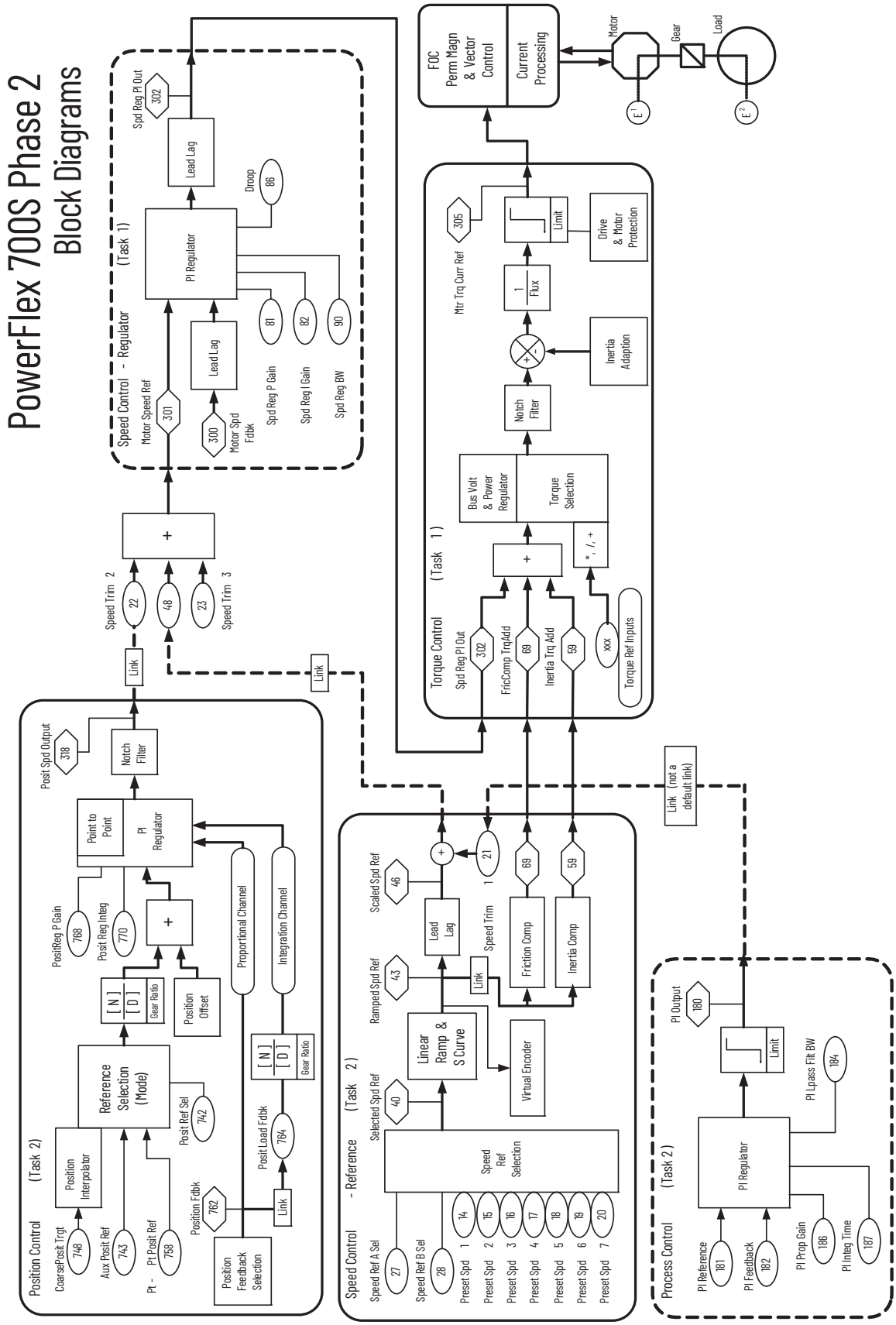
PowerFlex 700S Phase 2
Block Diagrams
Position Control (Task 2)
CoarsePosit Trgt
748
Aux Posit Ref
743
Pt - Pt Posit Ref
758
Position Interpolator
Reference Selection (Mode)
Posit Ref Sel
742
Gear Ratio
Position Offset
Position Fdbk
762
Position Feedback Selection
Posit Load Fdbk
764
Proportional Channel
Integration Channel
PositReg P Gain
768
Posit Reg Integ
770
Point to Point
PI Regulator
Notch Filter
Posit Spd Output
318
Link
Speed Trim 2
22
48
23
Speed Trim 3
Speed Control - Regulator (Task 1)
Motor Speed Ref
301
Motor Spd Fdbk
300
Lead Lag
PI Regulator
Lead Lag
Spd Reg Pl Out
302
Droop
86
Spd Reg P Gain
81
Spd Reg I Gain
82
Spd Reg BW
90
Speed Control - Reference (Task 2)
Speed Ref A Sel
27
Speed Ref B Sel
28
Preset Spd 1
14
Preset Spd 2
15
Preset Spd 3
16
Preset Spd 4
17
Preset Spd 5
18
Preset Spd 6
19
Preset Spd 7
20
Speed Ref Selection
Selected Spd Ref
40
Linear Ramp & S Curve
Virtual Encoder
Ramped Spd Ref
43
Lead Lag
Scaled Spd Ref
46
Speed Trim 1
21
Friction Comp
69
Inertia Comp
59
Torque Control (Task 1)
Spd Reg Pl Out
302
FricComp TrqAdd
69
Inertia Trq Add
59
xxx
Torque Ref Inputs
Bus Volt & Power Regulator
Torque Selection
Notch Filter
Inertia Adaption
1/Flux
Limit
Drive & Motor Protection
Mtr Trq Curr Ref
305
FOC Perm Magn & Vector Control
Current Processing
Motor
Gear
Load
Link (not a default link)
Process Control (Task 2)
PI Reference
181
PI Feedback
182
PI Regulator
PI Prop Gain
186
PI Integ Time
187
PI Lpass Filt BW
184
Limit
PI Output
180

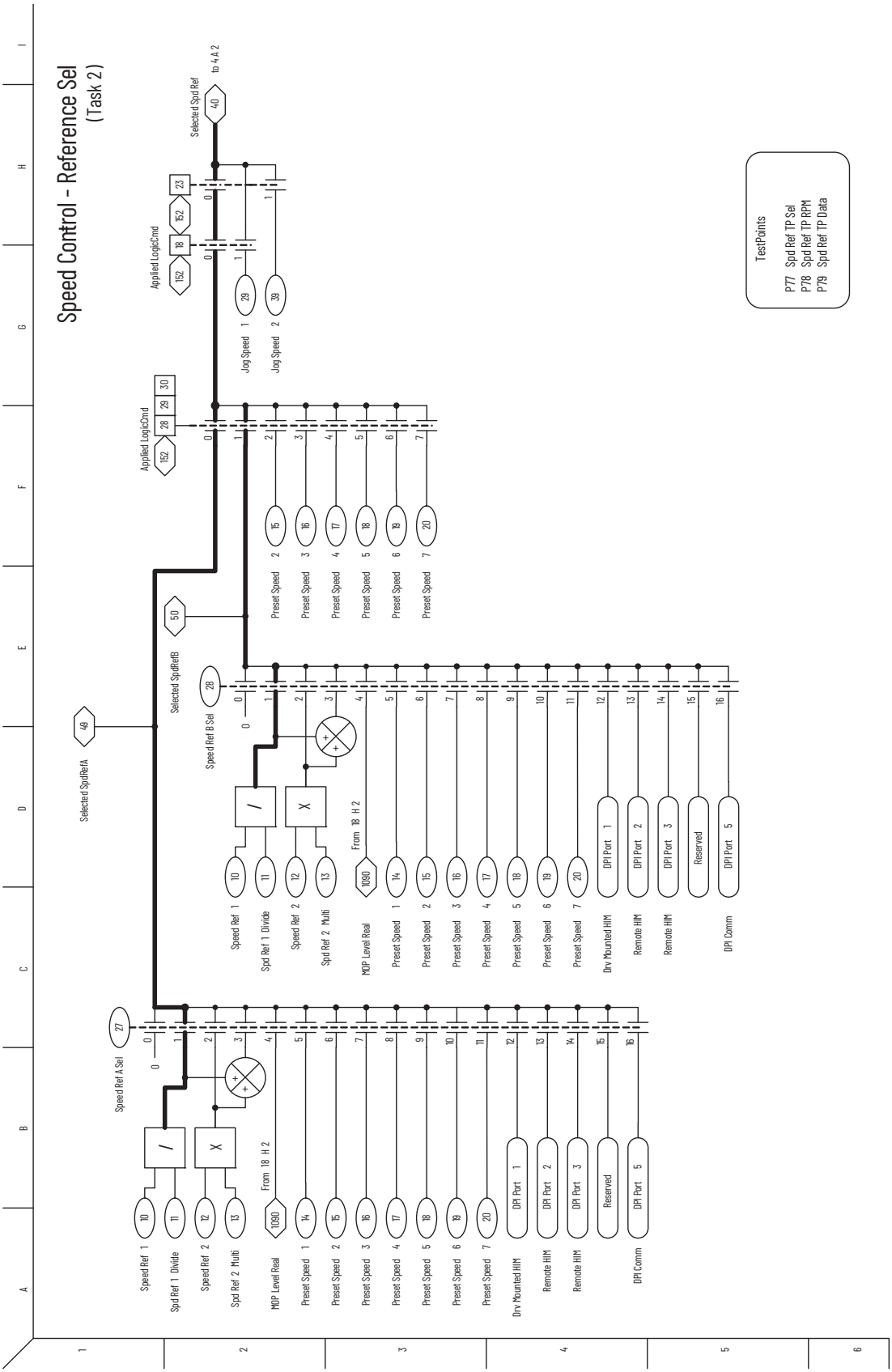
Speed Control - Reference Sel
(Task 2)
Selected Spd Ref
to 4 A 2
40
Applied LogicCmd
152
18
152
23
Jog Speed 1
Jog Speed 2
29
39
Applied LogicCmd
152
28
29
30
Preset Speed 2
Preset Speed 3
Preset Speed 4
Preset Speed 5
Preset Speed 6
Preset Speed 7
15
16
17
18
19
20
50
Selected SpdRefB
Speed Ref B Sel
28
Selected SpdRefA
49
Speed Ref 1
Spd Ref 1 Divide
Speed Ref 2
Spd Ref 2 Multi
10
11
12
13
From 18 H 2
1090
MOP Level Real
Preset Speed 1
Preset Speed 2
Preset Speed 3
Preset Speed 4
Preset Speed 5
Preset Speed 6
Preset Speed 7
14
15
16
17
18
19
20
Drv Mounted HIM
Remote HIM
Remote HIM
DPI Comm
DPI Port 1
DPI Port 2
DPI Port 3
Reserved
DPI Port 5
Speed Ref A Sel
27
TestPoints
P77 Spd Ref TP Sel
P78 Spd Ref TP RPM
P79 Spd Ref TP Data

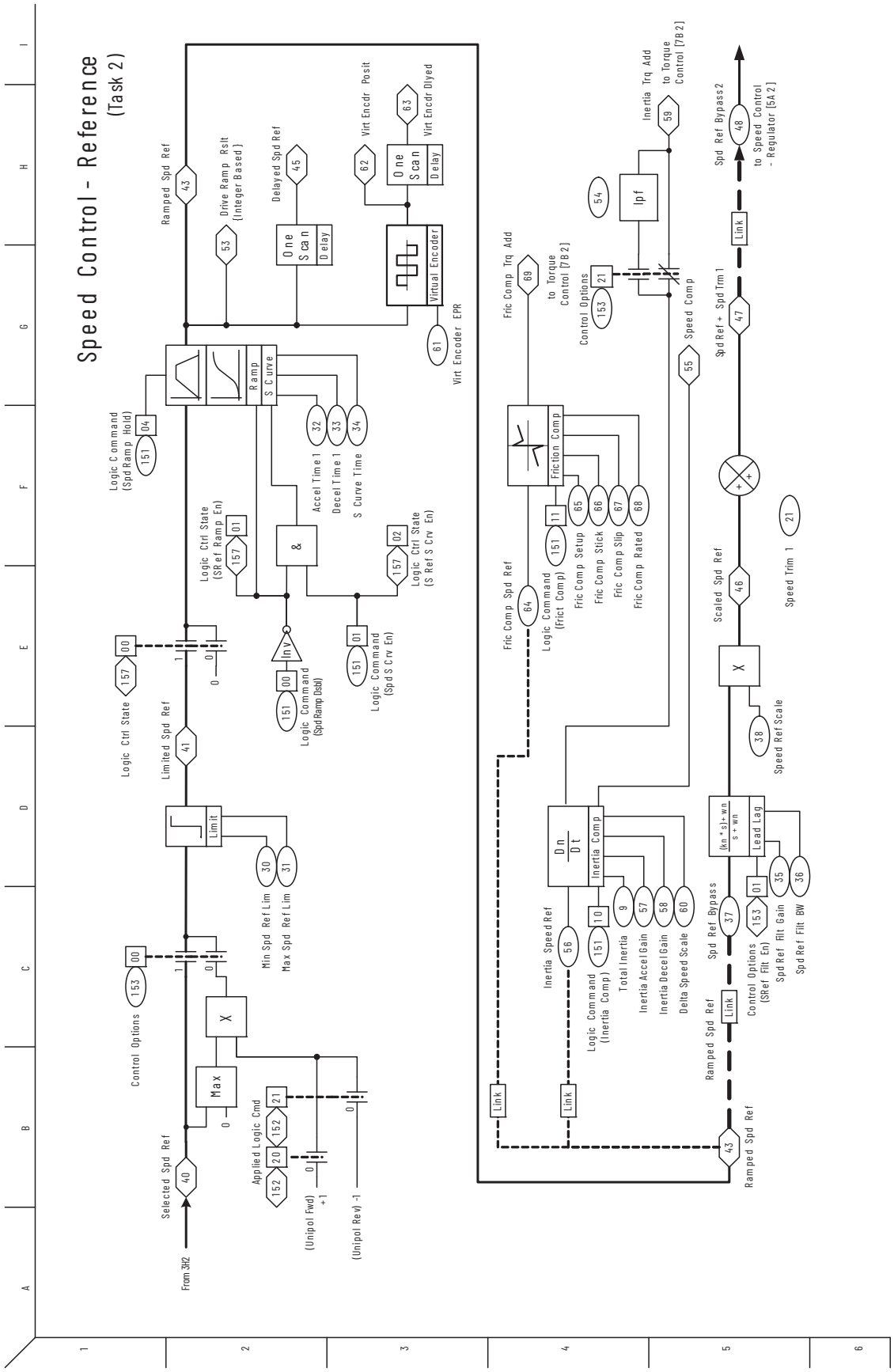
Speed Control - Reference
(Task 2)
Ramped Spd Ref
43
Drive Ramp Rslt
(Integer Based)
53
Delayed Spd Ref
45
One Scan
Delay
Virt Encdr Posit
62
Virt Encdr Dlyed
63
Virtual Encoder
Virt Encoder EPR
61
Ramp
S Curve
Logic Command
(Spd Ramp Hold)
151
04
32
33
34
Accel Time 1
Decel Time 1
S Curve Time
Logic Ctrl State
(SRef Ramp En)
157
01
&
Logic Ctrl State
(S Ref S Crv En)
157
02
Inv
00
151
Logic Command
(Spd Ramp Dsbl)
151
01
Logic Command
(Spd S Crv En)
157
00
Logic Ctrl State
Limited Spd Ref
41
Limit
30
31
Min Spd Ref Lim
Max Spd Ref Lim
153
00
Control Options
X
Max
Applied Logic Cmd
152
21
152
20
Selected Spd Ref
40
From 3K2
(Unipol Fwd) +1
(Unipol Rev) -1
Fric Comp Trq Add
69
to Torque
Control [7B2]
Control Options
153
21
54
Ipf
Inertia Trq Add
to Torque
Control [7B2]
59
Speed Comp
55
Friction Comp
11
151
65
66
67
68
Fric Comp Setup
Fric Comp Stick
Fric Comp Slip
Fric Comp Rated
Fric Comp Spd Ref
64
Logic Command
(Frict Comp)
Dn
Dt
Inertia Comp
Inertia Speed Ref
56
Logic Command
(Inertia Comp)
151
10
Total Inertia
9
Inertia Accel Gain
57
Inertia Decel Gain
58
Delta Speed Scale
60
Link
Link
Spd Ref Bypass2
48
to Speed Control
- Regulator [5A2]
Link
Spd Ref + Spd Trm 1
47
Scaled Spd Ref
46
X
Speed Ref Scale
38
Speed Trim 1
21
(kn * s) + wn
s + wn
Lead Lag
Spd Ref Bypass
37
Control Options
(SRef Flt En)
153
01
Spd Ref Flt Gain
35
Spd Ref Flt BW
36
Ramped Spd Ref
Link
Ramped Spd Ref
43

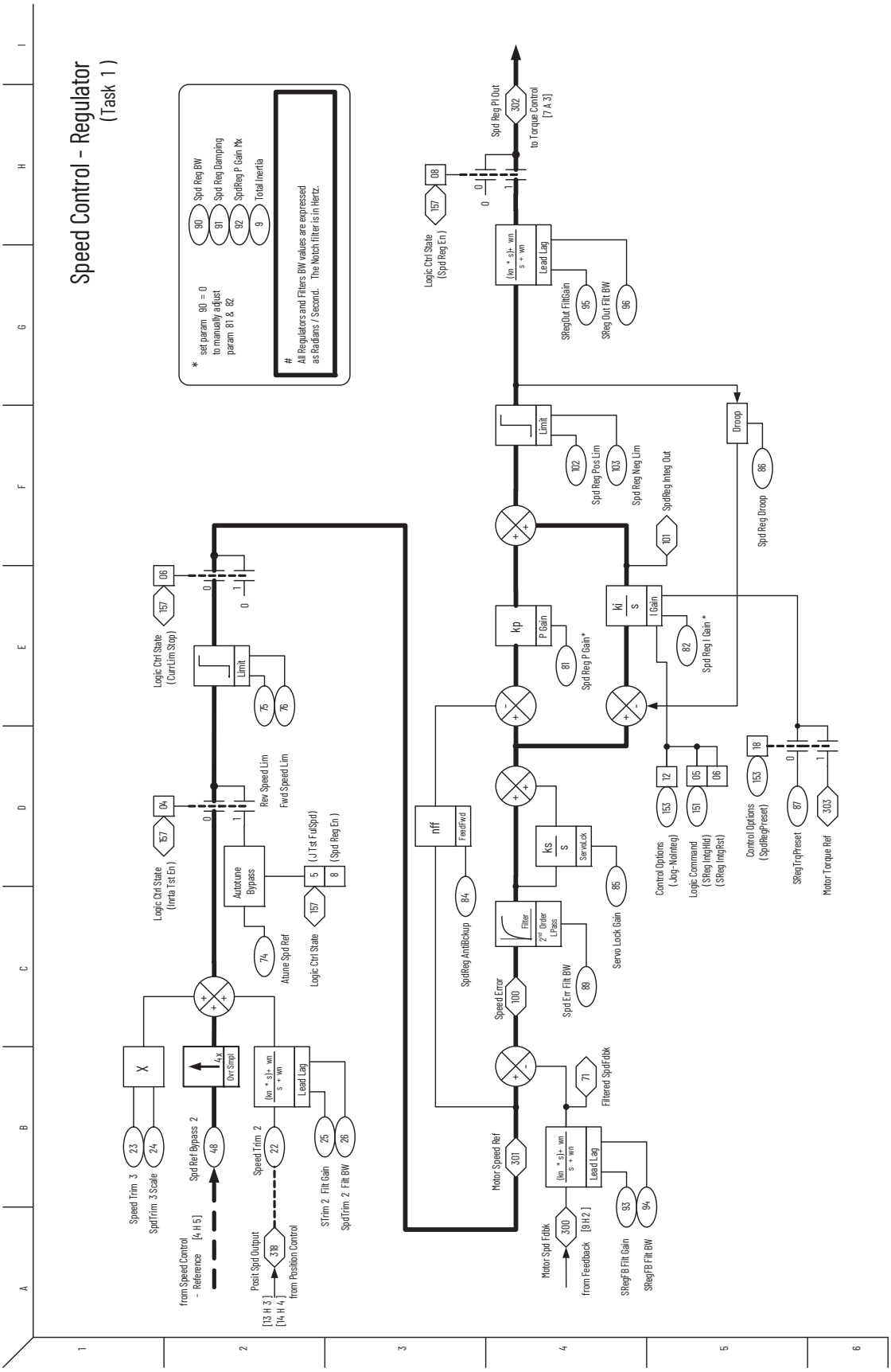
Speed Control - Regulator
(Task 1)
* set param 90 = 0 to manually adjust param 81 & 82
90 Spd Reg BW
91 Spd Reg Damping
92 SpdReg P Gain Mx
9 Total Inertia
All Regulators and Filters BW values are expressed as Radians / Second. The Notch filter is in Hertz.
Logic Ctrl State (Spd Reg En)
157
08
Spd Reg PI Out
302
to Torque Control [7 A 3]
Lead Lag
SRegOut FiltGain
95
SReg Out Filt BW
96
Limit
102
Spd Reg Pos Lim
103
Spd Reg Neg Lim
SpdReg Integ Out
101
Droop
86
Spd Reg Droop
Kp
P Gain
81
Spd Reg P Gain*
Ki
I Gain
82
Spd Reg I Gain *
12
153
Control Options (Jog +NoIntEg)
05
06
151
Logic Command (SReg IntgHld) (SReg IntgRst)
18
Control Options (SpdRegPreset)
87
SReg TrqPreset
303
Motor Torque Ref
nff
FeedFwd
84
SpdReg AntiBckup
Ks
S
ServoLck
85
Servo Lock Gain
Filter
2nd Order LPass
89
Spd Err Filt BW
Speed Error
100
71
Filtered SpdFdbk
Motor Speed Ref
301
Lead Lag
93
94
SRegFB Filt Gain
SRegFB Filt BW
Motor Spd Fdbk
300
from Feedback [9 H 2]
Limit
75
76
Logic Ctrl State (CurrLim Stop)
157
06
Rev Speed Lim
Fwd Speed Lim
Autotune Bypass
74
Atune Spd Ref
Logic Ctrl State (Inrtia Tst En)
157
04
5 (J Tst FulSpd)
8 (Spd Reg En)
Logic Ctrl State
157
X
4x
Ovr Smpl
Lead Lag
23
24
Speed Trim 3
SpdTrim 3 Scale
48
Spd Ref Bypass 2
22
Speed Trim 2
25
26
STrim 2 Filt Gain
SpdTrim 2 Filt BW
from Speed Control - Reference [4 H 5]
318
Posit Spd Output
[13 H 3]
[14 H 4]
from Position Control

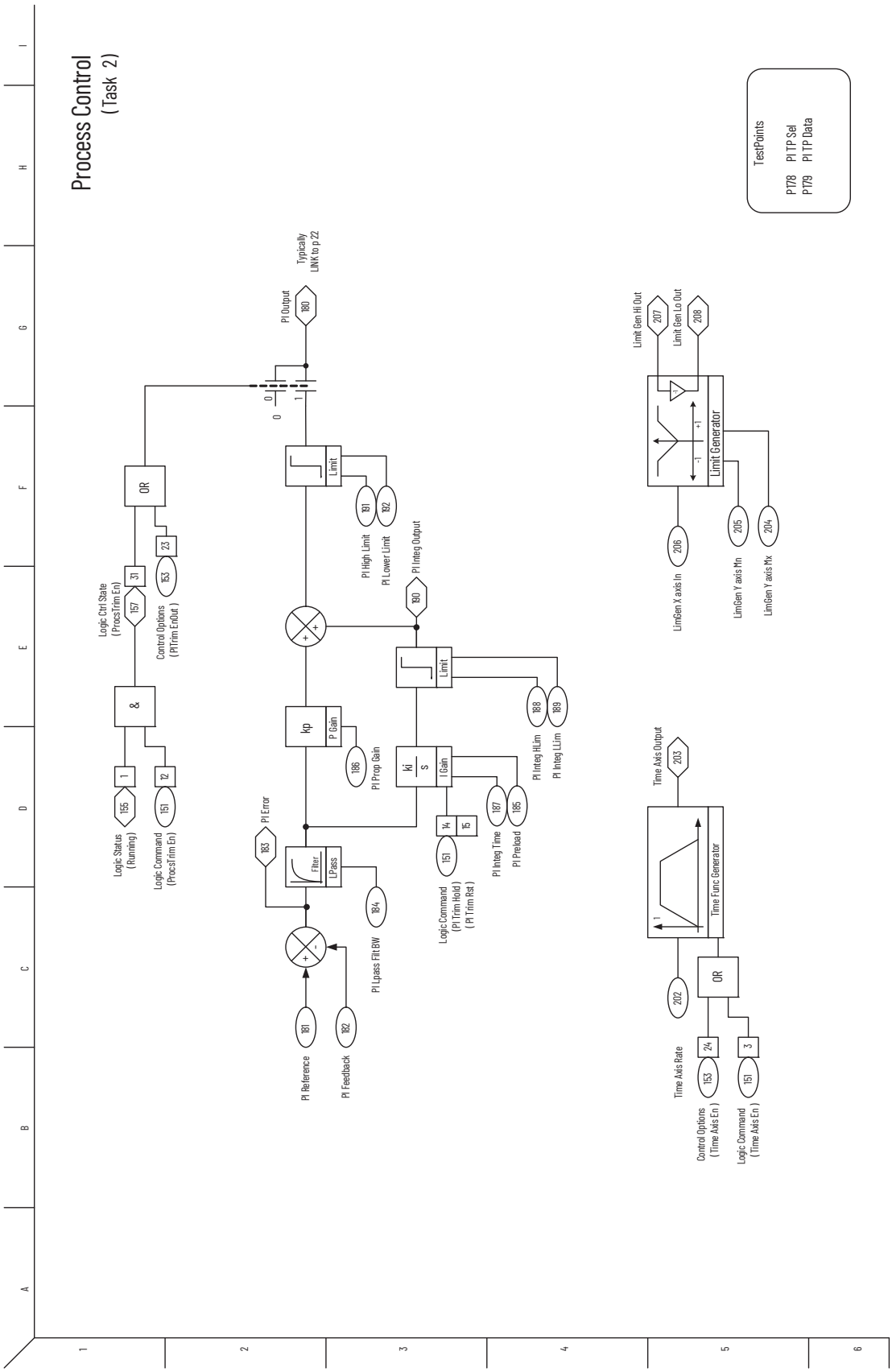
Process Control
(Task 2)
TestPoints
P178 PI TP Sel
P179 PI TP Data
Typically
LINK to p 22
PI Output
180
Limit
181
182
PI High Limit
PI Lower Limit
PI Integ Output
180
Limit
188
189
PI Integ HLim
PI Integ LLim
Kp
P Gain
186
PI Prop Gain
Ki
s
I Gain
14
15
187
185
PI Integ Time
PI Preload
151
Logic Command
(PI Trim Hold)
(PI Trim Rst)
Filter
LPass
184
PI Lpass Filt BW
183
PI Error
181
182
PI Reference
PI Feedback
OR
23
153
Control Options
(PI Trim EnOut)
31
157
Logic Ctrl State
(ProcsTrim En)
&
1
155
Logic Status
(Running)
12
151
Logic Command
(Procs Trim En)
Limit Gen Hi Out
207
Limit Gen Lo Out
208
Limit Generator
206
LimGen X axis In
205
LimGen Y axis Mn
204
LimGen Y axis Mx
Time Axis Output
203
Time Func Generator
1
OR
202
Time Axis Rate
24
153
Control Options
(Time Axis En)
3
151
Logic Command
(Time Axis En)

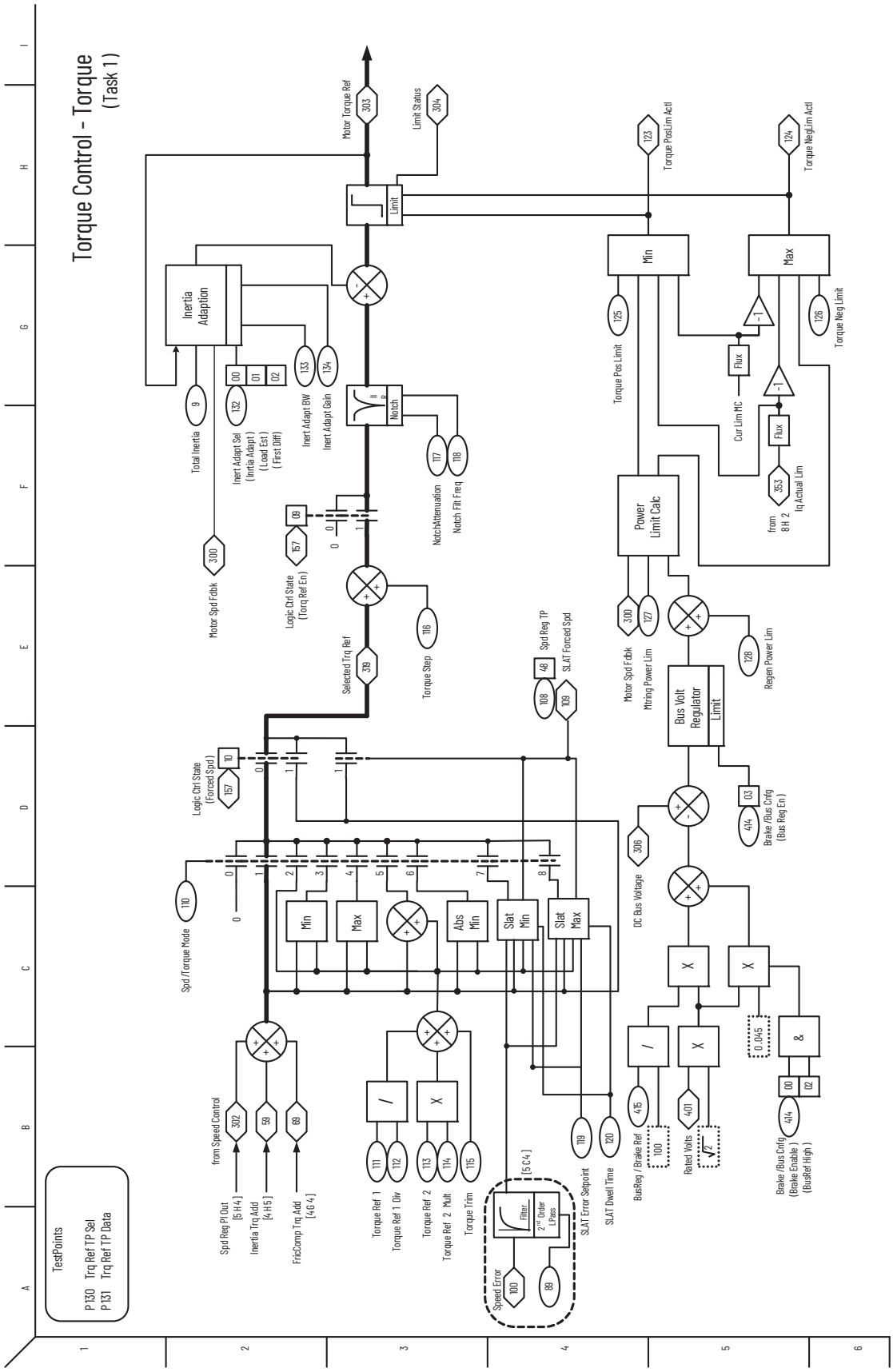
Torque Control - Torque
(Task 1)
TestPoints
P 130 Trq Ref TP Sel
P 131 Trq Ref TP Data
Motor Torque Ref
303
Limit Status
304
Limit
Inertia Adaption
Total Inertia
9
Inert Adapt Sel
(Inrtia Adapt)
(Load Est)
(First Diff)
132
00
01
02
Inert Adapt BW
133
Inert Adapt Gain
134
Notch
Notch Attenuation
117
Notch Filt Freq
118
Motor Spd Fdbk
300
Logic Ctrl State
(Torq Ref En)
157
09
Selected Trq Ref
339
Torque Step
116
Logic Ctrl State
(Forced Spd)
157
10
Spd /Torque Mode
110
Min
Max
Abs
Min
Slat
Min
Slat
Max
Spd Reg TP
48
SLAT Forced Spd
108
109
from Speed Control
Spd Reg PI Out
[5 H 4]
302
Inertia Trq Add
[4 H 5]
59
FricComp Trq Add
[4 G 4]
69
Torque Ref 1
111
Torque Ref 1 Div
112
Torque Ref 2
113
Torque Ref 2 Mult
114
Torque Trim
115
Filter
2nd Order
LPass
[5 C 4]
Speed Error
100
89
SLAT Error Setpoint
119
SLAT Dwell Time
120
Torque Pos Limit
125
Min
Max
Torque PosLim Actl
123
Torque NegLim Actl
124
Torque Neg Limit
126
-1
Flux
Cur Lim MC
Iq Actual Lim
353
from
8 H 2
Power
Limit Calc
Motor Spd Fdbk
300
Mtring Power Lim
127
Regen Power Lim
128
Bus Volt
Regulator
Limit
Brake /Bus Cnfg
(Bus Reg En)
03
414
DC Bus Voltage
306
BusReg / Brake Ref
415
100
Rated Volts
401
0.045
Brake /Bus Cnfg
(Brake Enable)
(BusRef High)
414
00
02

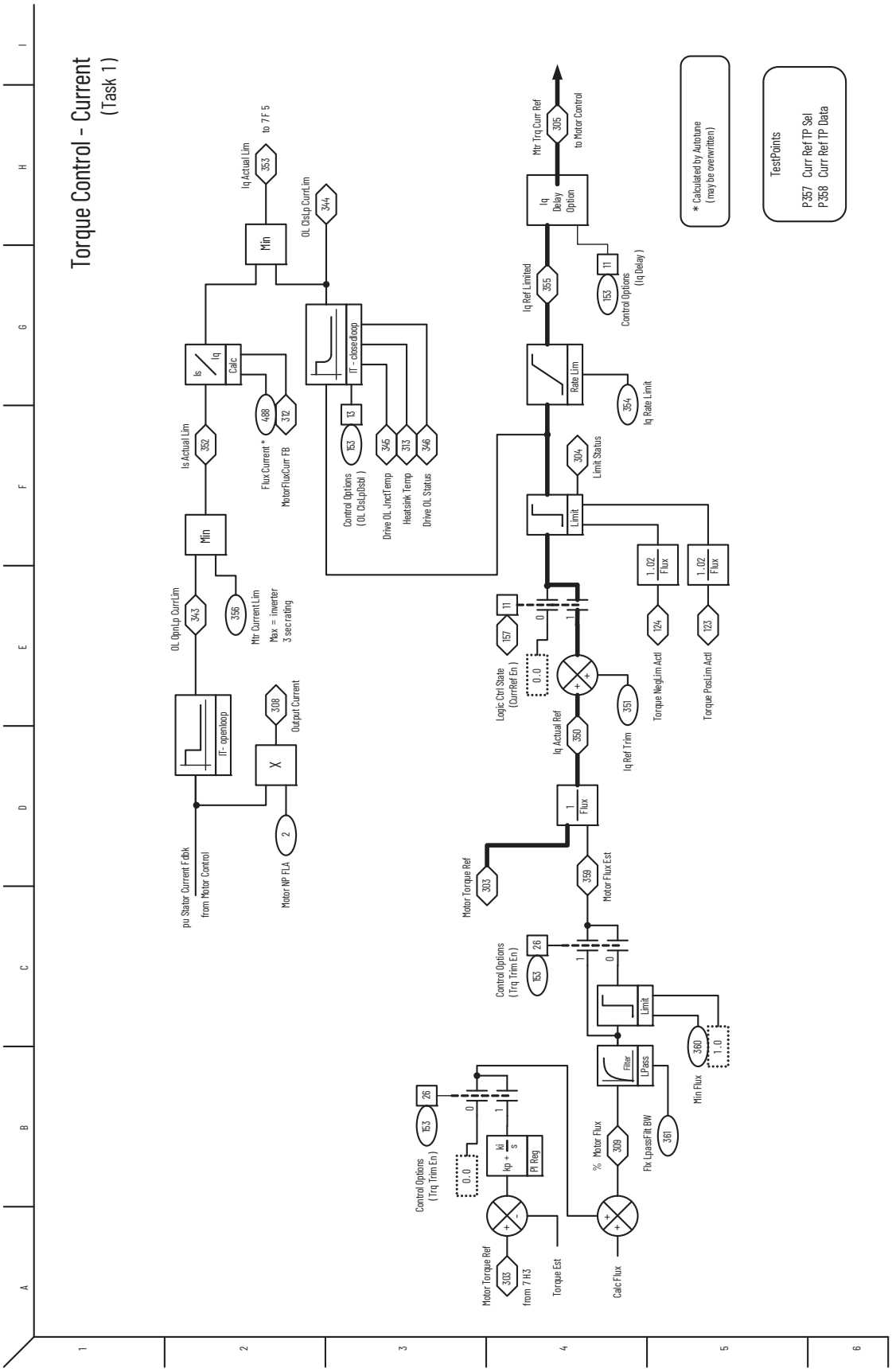
Torque Control - Current
(Task 1)
pu Stator Current Fdbk
from Motor Control
IT - openloop
Motor NP FLA
2
Output Current
308
OL OpnLp CurrLim
343
Mtr Current Lim
Max = inverter
3 sec rating
356
Min
Is Actual Lim
352
Is
Iq
Calc
Flux Current *
488
MotorFluxCurr FB
372
Iq Actual Lim
353
to 7 F 5
Min
OL ClsLp CurrLim
344
IT - closedloop
Control Options
(OL ClsLpIsbl)
153
13
Drive OL JnctTemp
345
Heatsink Temp
313
Drive OL Status
346
Motor Torque Ref
303
Flux
1
Motor Flux Est
359
Iq Actual Ref
350
Logic Ctrl State
(CurrRef En)
157
11
0
1
0.0
Iq Ref Trim
351
Torque NegLim Actl
124
1.02
Flux
Torque PosLim Actl
123
1.02
Flux
Limit
Limit Status
304
Iq Ref Limited
355
Rate Lim
Iq Rate Limit
354
Control Options
(Iq Delay)
153
11
Iq
Delay
Option
Mtr Trq Curr Ref
305
to Motor Control
Control Options
(Trq Trim En)
153
26
1
0
Filter
LPass
Min Flux
360
1.0
% Motor Flux
309
Flx LpassFlt BW
361
Calc Flux
Control Options
(Trq Trim En)
153
26
0
1
0.0
ki
kp + s
PI Reg
Motor Torque Ref
303
from 7 H 3
Torque Est
* Calculated by Autotune
(may be overwritten)
TestPoints
P357 Curr Ref TP Sel
P358 Curr Ref TP Data

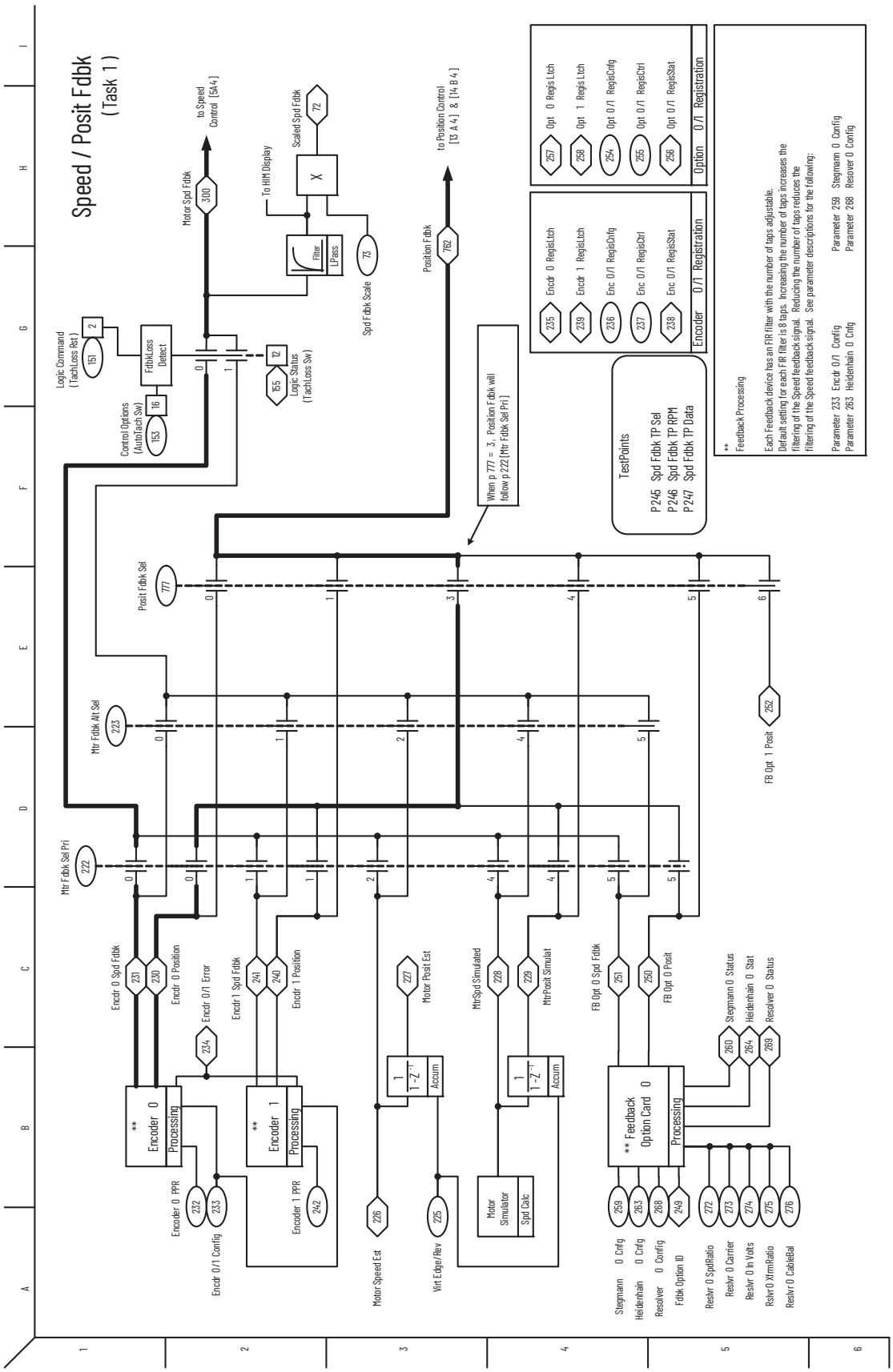
Speed / Posit Fdbk
(Task 1)
Motor Spd Fdbk
300
to Speed
Control [5A4.]
To HIM Display
Scaled Spd Fdbk
72
Filter
LPass
X
73
Spd Fdbk Scale
Position Fdbk
762
to Position Control
[13 A 4.] & [14 B 4.]
Logic Command
(TachLoss Rst.)
151
2
FdbkLoss
Detect
Control Options
(AutoTach Sw)
153
16
155
12
Logic Status
(TachLoss Sw)
When p 777 = 3, Position Fdbk will
follow p 222 [Mtr Fdbk Sel Pri.]
TestPoints
P 245 Spd Fdbk TP Sel
P 246 Spd Fdbk TP RPM
P 247 Spd Fdbk TP Data
Encdr 0 RegisLtch
235
Encdr 1 RegisLtch
239
Enc 0/1 RegisCnfg
236
Enc 0/1 RegisCtrl
237
Enc 0/1 RegisStat
238
Encoder 0/1 Registration
Opt 0 RegisLtch
257
Opt 1 RegisLtch
258
Opt 0/1 RegisCnfg
254
Opt 0/1 RegisCtrl
255
Opt 0/1 RegisStat
256
Option 0/1 Registration
**
Feedback Processing
Each Feedback device has an FIR filter with the number of taps adjustable.
Default setting for each FIR filter is 8 taps. Increasing the number of taps increases the
filtering of the Speed feedback signal. Reducing the number of taps reduces the
filtering of the Speed feedback signal. See parameter descriptions for the following:
Parameter 233 Encdr 0/1 Config
Parameter 263 Heidenhain 0 Cnfg
Parameter 259 Stegmann 0 Config
Parameter 268 Resolver 0 Config
Posit Fdbk Sel
777
Mtr Fdbk Alt Sel
223
Mtr Fdbk Sel Pri
222
FB Opt 1 Posit
252
Encdr 0 Spd Fdbk
231
230
Encdr 0 Position
Encdr 0/1 Error
234
Encdr 1 Spd Fdbk
241
240
Encdr 1 Position
227
Motor Posit Est
MtrSpd Simulated
228
229
MtrPosit Simulat
FB Opt 0 Spd Fdbk
251
250
FB Opt 0 Posit
Stegmann 0 Status
260
Heidenhain 0 Stat
264
Resolver 0 Status
269
** Encoder 0
Processing
** Encoder 1
Processing
1
1 - Z⁻¹
Accum
** Feedback
Option Card 0
Processing
Motor
Simulator
Spd Calc
Encoder 0 PPR
232
233
Encdr 0/1 Config
Encoder 1 PPR
242
226
Motor Speed Est
225
Virt Edge/Rev
259
263
268
249
Stegmann 0 Cnfg
Heidenhain 0 Cnfg
Resolver 0 Config
Fdbk Option ID
272
273
274
275
276
Rslvr 0 SpdRatio
Rslvr 0 Carrier
Rslvr 0 In Volts
Rslvr 0 XfrmRatio
Rslvr 0 CableBal

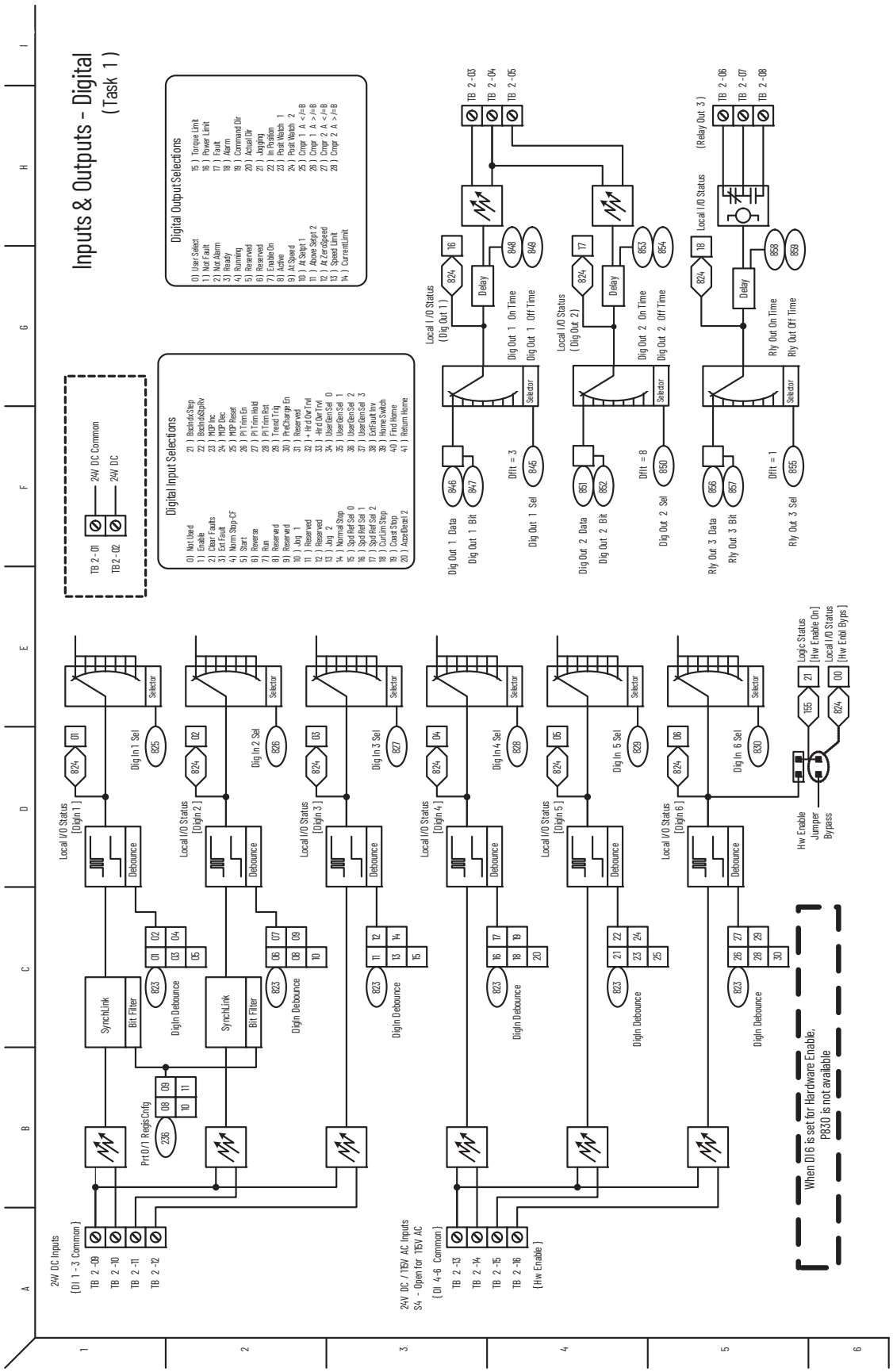
Inputs & Outputs - Digital
(Task 1)
Digital Output Selections
0) User Select
1) Not Fault
2) Not Alarm
3) Ready
4) Running
5) Reserved
6) Reserved
7) Reserved
8) At Speed
10) At Setpt 1
11) Above Setpt 2
12) At ZeroSpeed
13) Speed Limit
14) CurrentLimit
15) Torque Limit
16) Power Limit
17) Fault
18) Alarm
19) CommandDir
20) Actual Dir
21) Jogging
22) PosRestart
23) Pos Watch 1
24) Pos Watch 2
25) Cmpr 1 A <=B
26) Cmpr 1 A >=B
27) Cmpr 2 A <=B
28) Cmpr 2 A >=B
Digital Input Selections
01) Not Used
11) Enable
21) Clear Faults
31) Ext Fault
41) Norm Stop-CF
51) Start
61) Reverse
71) Run
81) Reserved
91) Reserved
101) Jog 1
111) Reserved
121) Reserved
131) Jog 2
141) Normal Stop
151) SpdRef Sel 0
161) SpdRef Sel 1
171) SpdRef Sel 2
181) CurLim Stop
191) Coast Stop
201) AccelDecel 2
21) BackstopStep
22) BackstopSpdlv
23) MOP Inc
24) MOP Dec
25) MOP Reset
26) PI Trim En
27) PI Trim Hold
28) PI Trim Rst
29) Trend Trig
30) PreCharge En
31) Reserved
32) + Hrd Ovr Trvl
33) -Hrd Ovr Trvl
34) UserDefinSel 0
35) UserDefinSel 1
36) UserDefinSel 2
37) UserDefinSel 3
38) ExtFault Inv
39) Home Switch
40) Find Home
41) Return Home
24V DC Common
24V DC
TB 2 -01
TB 2 -02
Local I/O Status (Dig Out 1)
Dig Out 1 Data
Dig Out 1 Bit
Dig Out 1 Sel
Dig Out 1 On Time
Dig Out 1 Off Time
Local I/O Status (Dig Out 2)
Dig Out 2 Data
Dig Out 2 Bit
Dig Out 2 Sel
Dig Out 2 On Time
Dig Out 2 Off Time
Local I/O Status (Relay Out 3)
Rly Out 3 Data
Rly Out 3 Bit
Rly Out 3 Sel
Rly Out On Time
Rly Out Off Time
Selector
Delay
Dflt = 3
Dflt = 8
Dflt = 1
Local I/O Status [Digin 1]
Local I/O Status [Digin 2]
Local I/O Status [Digin 3]
Local I/O Status [Digin 4]
Local I/O Status [Digin 5]
Local I/O Status [Digin 6]
Debounce
Dig In 1 Sel
Dig In 2 Sel
Dig In 3 Sel
Dig In 4 Sel
Dig In 5 Sel
Dig In 6 Sel
SynchLink
Bit Filter
Digin Debounce
Prt 0/1 Regis Cnfg
Hw Enable Jumper Bypass
Logic Status [Hw Enable On]
Local I/O Status [Hw Enbl Byps]
24V DC Inputs
{DI 1 - 3 Common}
TB 2 -09
TB 2 -10
TB 2 -11
TB 2 -12
24V DC / 115V AC Inputs
S4 - Open for 115V AC
{DI 4-6 Common}
TB 2 -13
TB 2 -14
TB 2 -15
TB 2 -16
{Hw Enable}
TB 2 -03
TB 2 -04
TB 2 -05
TB 2 -06
TB 2 -07
TB 2 -08
When DI6 is set for Hardware Enable, P830 is not available

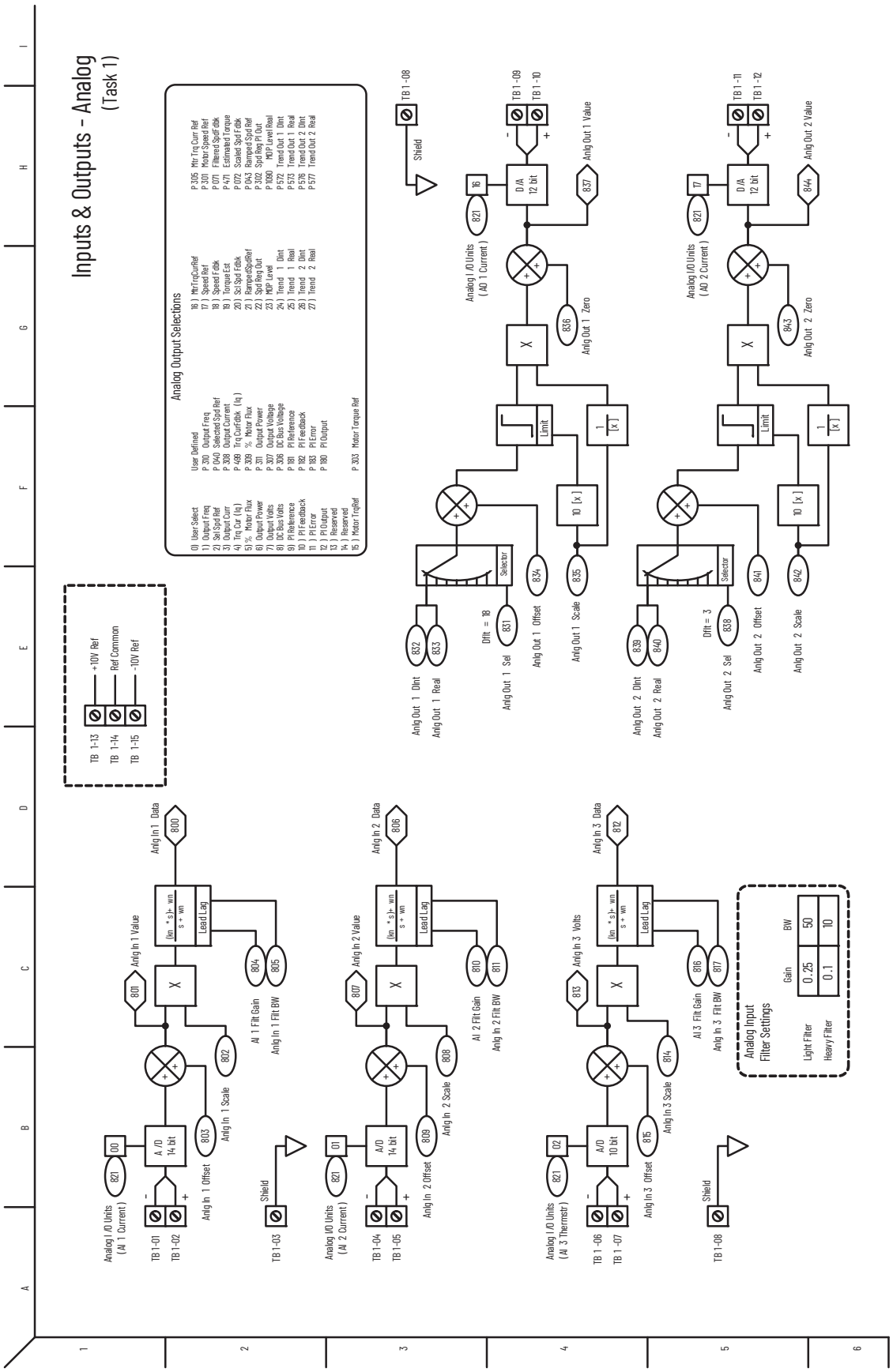
Inputs & Outputs - Analog
(Task 1)
Analog Output Selections
0) User Select User Defined
1) Output Freq P 310 Output Freq
2) Sel Spd Ref P 940 Selected Spd Ref
3) Output Curr P 308 Output Current
4) Trq Cur (Iq) P 499 Trq Curfdbk (Iq)
5) % Motor Flux P 309 % Motor Flux
6) Output Power P 311 Output Power
7) Output Volts P 307 Output Voltage
8) DC Bus Volts P 306 DC Bus Voltage
9) PI Reference P 181 PI Reference
10) PI Feedback P 182 PI Feedback
11) PI Error P 183 PI Error
12) PI Output P 180 PI Output
13) Reserved
14) Reserved
15) Motor Trq Ref P 303 Motor Torque Ref
16) Mtr Trq CurRef P 305 Mtr Trq Curr Ref
17) Speed Ref P 301 Motor Speed Ref
18) Speed Fdbk P 071 Filtered Spd Fdbk
19) Torque Est P 471 Estimated Torque
20) Scl Spd Fdbk P 072 Scaled Spd Fdbk
21) RamperSpdRef P 043 Ramped Spd Ref
22) Spd Reg PI Out P 302 Spd Reg PI Out
23) MDP Level P 1090 MDP Level Real
24) Trend 1 Dint P 572 Trend Out 1 Dint
25) Trend 1 Real P 573 Trend Out 1 Real
26) Trend 2 Dint P 576 Trend Out 2 Dint
27) Trend 2 Real P 577 Trend Out 2 Real
TB 1-13 +10V Ref
TB 1-14 Ref Common
TB 1-15 -10V Ref
Analog I/O Units (AI 1 Current)
TB 1-01
TB 1-02
A /D 14 bit
Anlg In 1 Offset
Anlg In 1 Scale
Anlg In 1 Value
Lead Lag
Anlg In 1 Data
AI 1 Filt Gain
Anlg In 1 Filt BW
Shield
TB 1-03
Analog I/O Units (AI 2 Current)
TB 1-04
TB 1-05
A/D 14 bit
Anlg In 2 Offset
Anlg In 2 Scale
Anlg In 2 Value
Anlg In 2 Data
AI 2 Filt Gain
Anlg In 2 Filt BW
Analog I/O Units (AI 3 Thermistr)
TB 1-06
TB 1-07
A/D 10 bit
Anlg In 3 Offset
Anlg In 3 Scale
Anlg In 3 Volts
Anlg In 3 Data
AI 3 Filt Gain
Anlg In 3 Filt BW
Analog Input Filter Settings
Gain BW
Light Filter 0.25 50
Heavy Filter 0.1 10
TB 1-08
Shield
Analog I/O Units (AO 1 Current)
D/A 12 bit
TB 1-09
TB 1-10
Anlg Out 1 Value
Anlg Out 1 Zero
Limit
1/[x]
10 [x]
Selector
Anlg Out 1 Dint
Anlg Out 1 Real
Dint = 18
Anlg Out 1 Sel
Anlg Out 1 Offset
Anlg Out 1 Scale
Analog I/O Units (AO 2 Current)
TB 1-11
TB 1-12
Anlg Out 2 Value
Anlg Out 2 Zero
Anlg Out 2 Dint
Anlg Out 2 Real
Dint = 3
Anlg Out 2 Sel
Anlg Out 2 Offset
Anlg Out 2 Scale

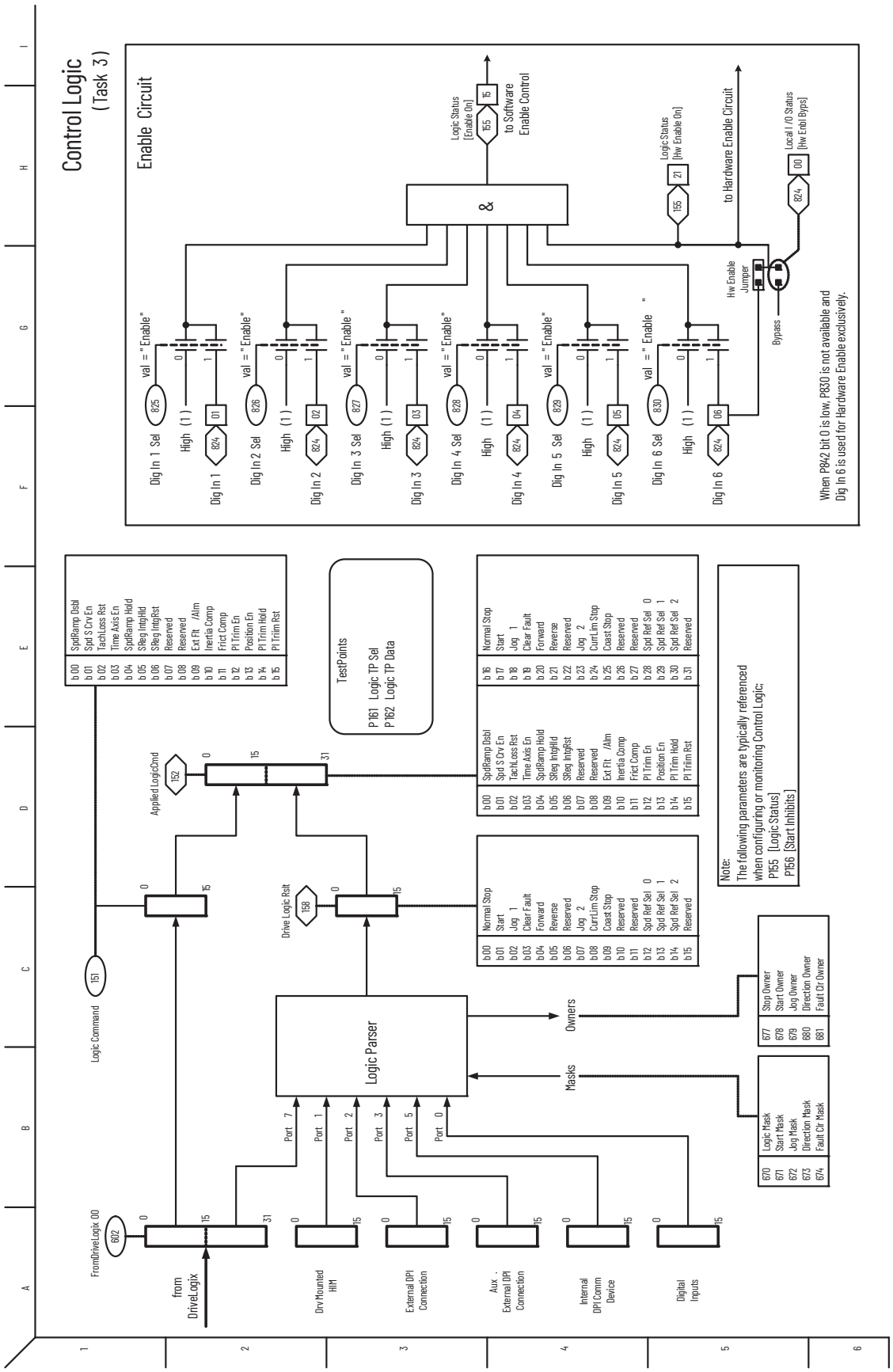
Control Logic
(Task 3)
Enable Circuit
Dig In 1 Sel
Dig In 2 Sel
Dig In 3 Sel
Dig In 4 Sel
Dig In 5 Sel
Dig In 6 Sel
val = " Enable "
High (1)
Dig In 1
Dig In 2
Dig In 3
Dig In 4
Dig In 5
Dig In 6
Logic Status [Enable On]
to Software Enable Control
Logic Status [Hw Enable On]
to Hardware Enable Circuit
Local I/O Status [Hw Enbl Bypss]
Hw Enable Jumper
Bypass
When P842 bit 0 is low, P830 is not available and Dig In 6 is used for Hardware Enable exclusively.
FromDriveLogix 00
from DriveLogix
Drv Mounted HIM
External DPI Connection
Aux. External DPI Connection
Internal DPI Comm Device
Digital Inputs
Logic Command
Applied LogicCmd
Drive Logic Rsit
Logic Parser
Port 7
Port 1
Port 2
Port 3
Port 5
Port 0
Masks
Owners
Logic Mask
Start Mask
Jog Mask
Direction Mask
Fault Clr Mask
Stop Owner
Start Owner
Jog Owner
Direction Owner
Fault Clr Owner
TestPoints
P161 Logic TP Sel
P162 Logic TP Data
Note:
The following parameters are typically referenced when configuring or monitoring Control Logic:
P155 [Logic Status]
P156 [Start Inhibits]

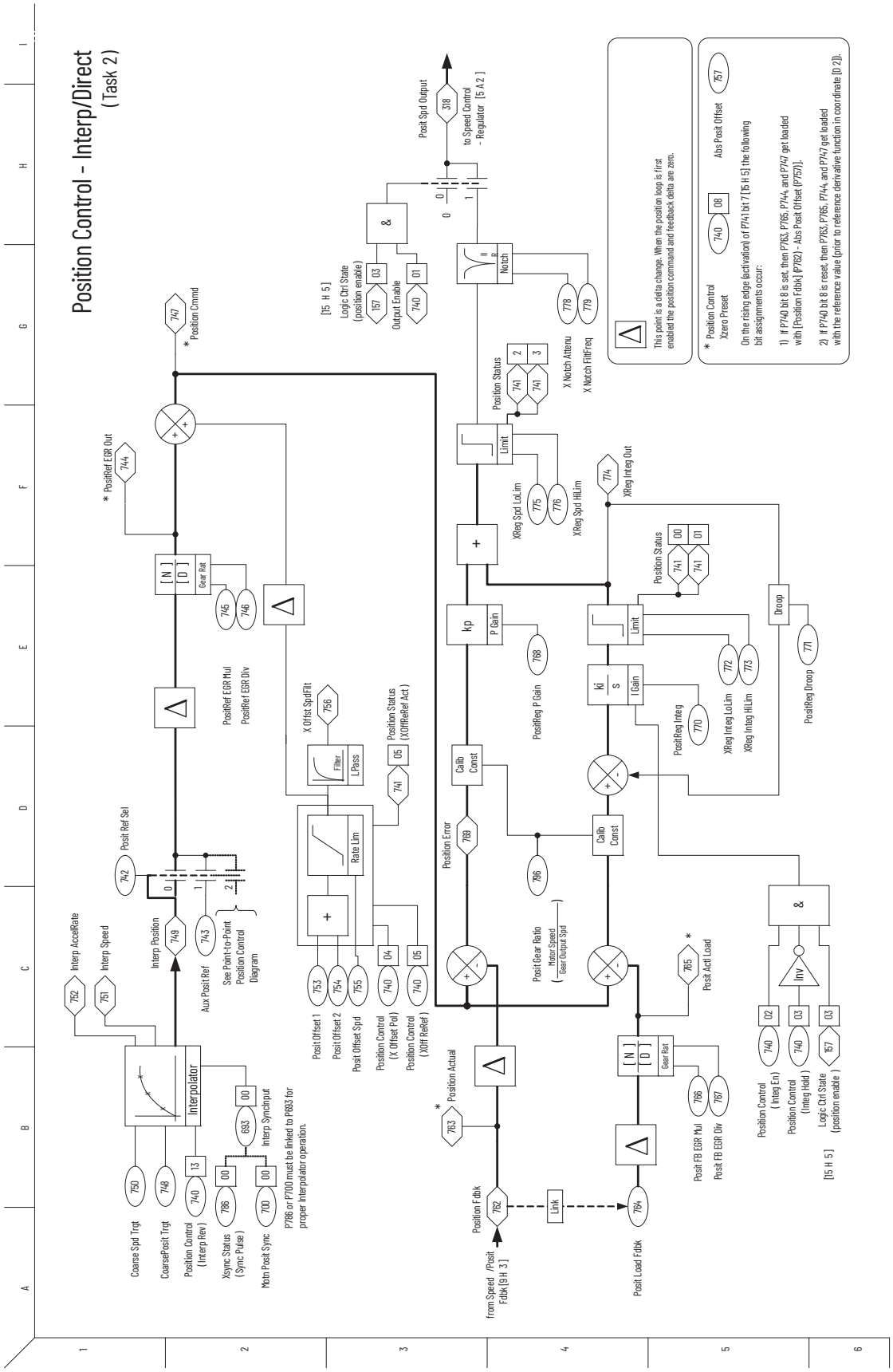
Position Control - Interp/Direct
(Task 2)
Interp AccelRate
Interp Speed
Posit Ref Sel
Interp Position
Aux Posit Ref
See Point-to-Point Position Control Diagram
Interpolator
Coarse Spd Trqt
CoarsePosit Trqt
Position Control (Interp Rev)
Xsync Status (Sync Pulse)
Mstr Posit Sync
Interp Synchput
P786 or P700 must be linked to P693 for proper Interpolator operation.
Posit Offset 1
Posit Offset 2
Posit Offset Spd
Position Control (X Offset Pol)
Position Control (XOff ReRef)
Rate Lim
Filter
LPass
X Offst SpdFilt
Position Status (XOffReRef Act)
PositRef EGR Mul
PositRef EGR Div
Gear Rat
* PositRef EGR Out
* Position Cmmd
Position Actual
Position Fdbk
from Speed /Posit Fdbk [9 H 3]
Link
Posit Load Fdbk
Posit Gear Ratio
Motor Speed / Gear Output Spd
Position Error
Calib Const
P Gain
PositReg P Gain
I Gain
PositReg Integ
Limit
XReg Spd LoLim
XReg Spd HiLim
XReg Integ Out
XReg Integ LoLim
XReg Integ HiLim
Droop
PositReg Droop
Posit Actl Load
Posit FB EGR Mul
Posit FB EGR Div
Position Control (Integ En)
Position Control (Integ Hold)
Logic Ctrl State (position enable)
[15 H 5]
Inv
Notch
X Notch Attenu
X Notch FiltFreq
Position Status
Posit Spd Output
to Speed Control - Regulator [5 A 2]
Output Enable
Logic Ctrl State (position enable)
This point is a delta change. When the position loop is first enabled the position command and feedback delta are zero.
* Position Control Xzero Preset
On the rising edge (activation) of P741 bit 7 [15 H 5] the following bit assignments occur:
1) If P740 bit 8 is set, then P763, P765, P744, and P747 get loaded with [Position Fdbk] (P762) - Abs Posit Offset (P757).
2) If P740 bit 8 is reset, then P763, P765, P744, and P747 get loaded with the reference value (prior to reference derivative function in coordinate [0 2]).
Abs Posit Offset

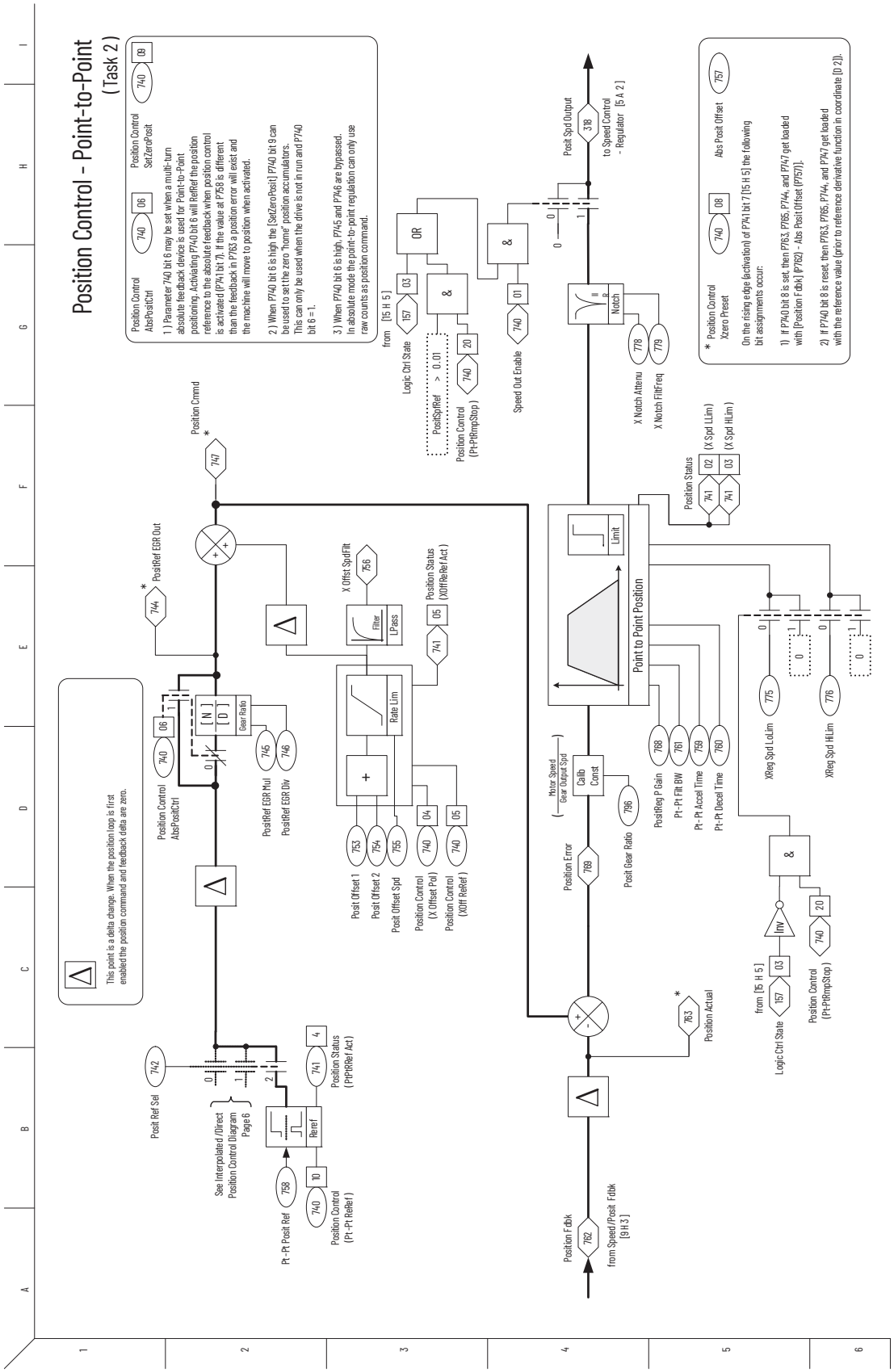
Position Control - Point-to-Point
(Task 2)
Position Control AbsPositCtrl 740 06
Position Control SetZeroPosit 740 09
1) Parameter 740 bit 6 may be set when a multi-turn absolute feedback device is used for Point-to-Point positioning. Activating P740 bit 6 will ReRef the position reference to the absolute feedback when position control is activated (P741 bit 7). If the value at P758 is different than the feedback in P763 a position error will exist and the machine will move to position when activated.
2) When P740 bit 6 is high, the [SetZeroPosit] P740 bit 9 can be used to set the zero 'home' position accumulators. This can only be used when the drive is not in run and P740 bit 6 = 1.
3) When P740 bit 6 is high, P745 and P746 are bypassed. In absolute mode the point-to-point regulation can only use raw counts as position command.
This point is a delta change. When the position loop is first enabled the position command and feedback delta are zero.
Position Control AbsPositCtrl 740 06
Gear Ratio
[N]
[D]
PositRef EGR Mul 745
PositRef EGR Div 746
Posit Ref Sel 742
See Interpolated / Direct Position Control Diagram Page 6
Pt - Pt Posit Ref 758
Reref
Position Control (Pt - Pt ReRef) 740 10
Position Status (PtPtRef Act) 741 4
Position Cmmd * 747
PositRef EGR Out * 744
X Offst SpdFilt 756
Filter
LPass
Rate Lim
Posit Offset 1 753
Posit Offset 2 754
Posit Offset Spd 755
Position Control (X Offset Pol) 740 04
Position Control (XOff ReRef) 740 05
Position Status (XOffReRef Act) 741 05
Position Fdbk 762
from Speed / Posit Fdbk [9 H 3]
Position Error 769
Motor Speed / Gear Output Spd
Calib Const
Posit Gear Ratio 786
Position Actual * 763
Point to Point Position
Limit
PositReg P Gain 768
Pt - Pt Filt BW 761
Pt - Pt Accel Time 759
Pt - Pt Decel Time 760
Position Status 741 02 (X Spd LLim) 741 03 (X Spd HLim)
XReg Spd LoLim 775
XReg Spd HiLim 776
Posit Spd Output 318
to Speed Control - Regulator [5 A 2]
Notch
X Notch Attenu 778
X Notch FltFreq 779
Speed Out Enable 740 01
&
OR
PositSpdRef > 0.01
Position Control (Pt-PtRmpStop) 740 20
from [15 H 5]
Logic Ctrl State 157 03
Inv
Position Control (Pt-PtRmpStop) 740 20
Position Control Xzero Preset * 740 08
Abs Posit Offset 757
On the rising edge (activation) of P741 bit 7 [15 H 5] the following bit assignments occur:
1) If P740 bit 8 is set, then P763, P765, P744, and P747 get loaded with [Position F dbk] (P762) - Abs Posit Offset (P757)].
2) If P740 bit 8 is reset, then P763, P765, P744, and P747 get loaded with the reference value (prior to reference derivative function in coordinate [0 2]).

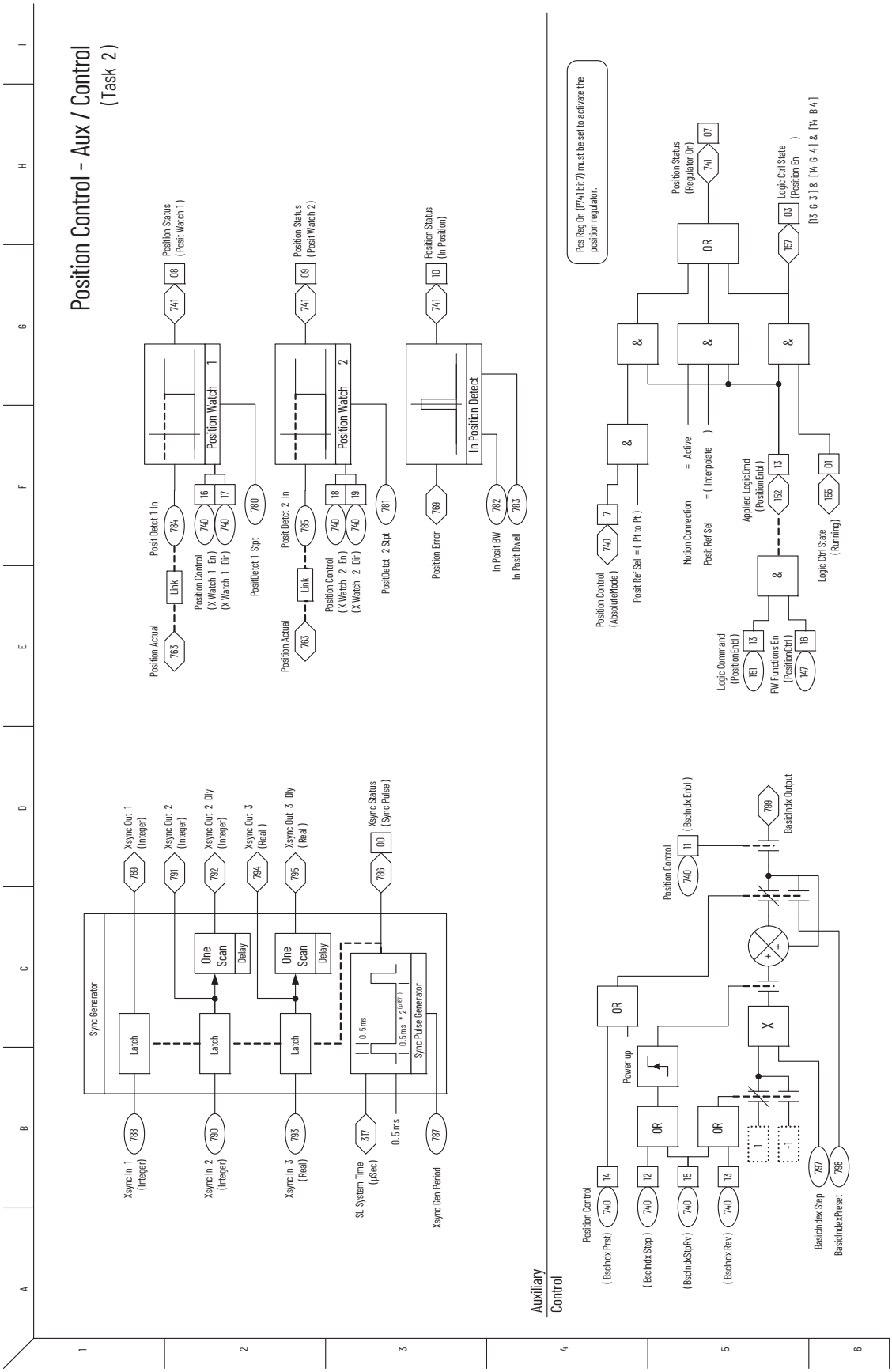
Position Control - Aux / Control
(Task 2)
Position Status
(Posit Watch 1)
Position Watch 1
Posit Detct 1 In
Position Actual
Link
Position Control
(X Watch 1 En)
(X Watch 1 Dir)
PositDetct 1 Stpt
Position Status
(Posit Watch 2)
Position Watch 2
Posit Dectct 2 In
Position Actual
Link
Position Control
(X Watch 2 En)
(X Watch 2 Dir)
PositDetct 2 Stpt
Position Status
(In Position)
In Position Detect
Position Error
In Posit BW
In Posit Dwell
Pos Reg On (P741 bit 7) must be set to activate the position regulator.
Position Status
(Regulator On)
Logic Ctrl State
(Position En)
[13 G 3] & [14 G 4] & [14 B 4]
Position Control
(AbsoluteMode)
Posit Ref Sel = (Pt to Pt)
Motion Connection = Active
Posit Ref Sel = (Interpolate)
Applied LogicCmd
(PositionEnbl)
Logic Command
(PositionEnbl)
FW Functions En
(PositionCtrl)
Logic Ctrl State
(Running)
Sync Generator
Xsync In 1
(Integer)
Xsync Out 1
(Integer)
Xsync Out 2
(Integer)
Xsync Out 2 Dly
(Integer)
Xsync Out 3
(Real)
Xsync Out 3 Dly
(Real)
Xsync Status
(Sync Pulse)
Xsync In 2
(Integer)
Xsync In 3
(Real)
SL System Time
(µSec)
Xsync Gen Period
Latch
One Scan
Delay
0.5 ms
Sync Pulse Generator
Auxiliary Control
Position Control
(BscIndx Enbl)
BasicIndx Output
Power up
OR
BasicIndx Step
BasicIndexPreset
Position Control
(BscIndx Prst)
(BscIndx Step)
(BscIndxStpRev)
(BscIndx Rev)

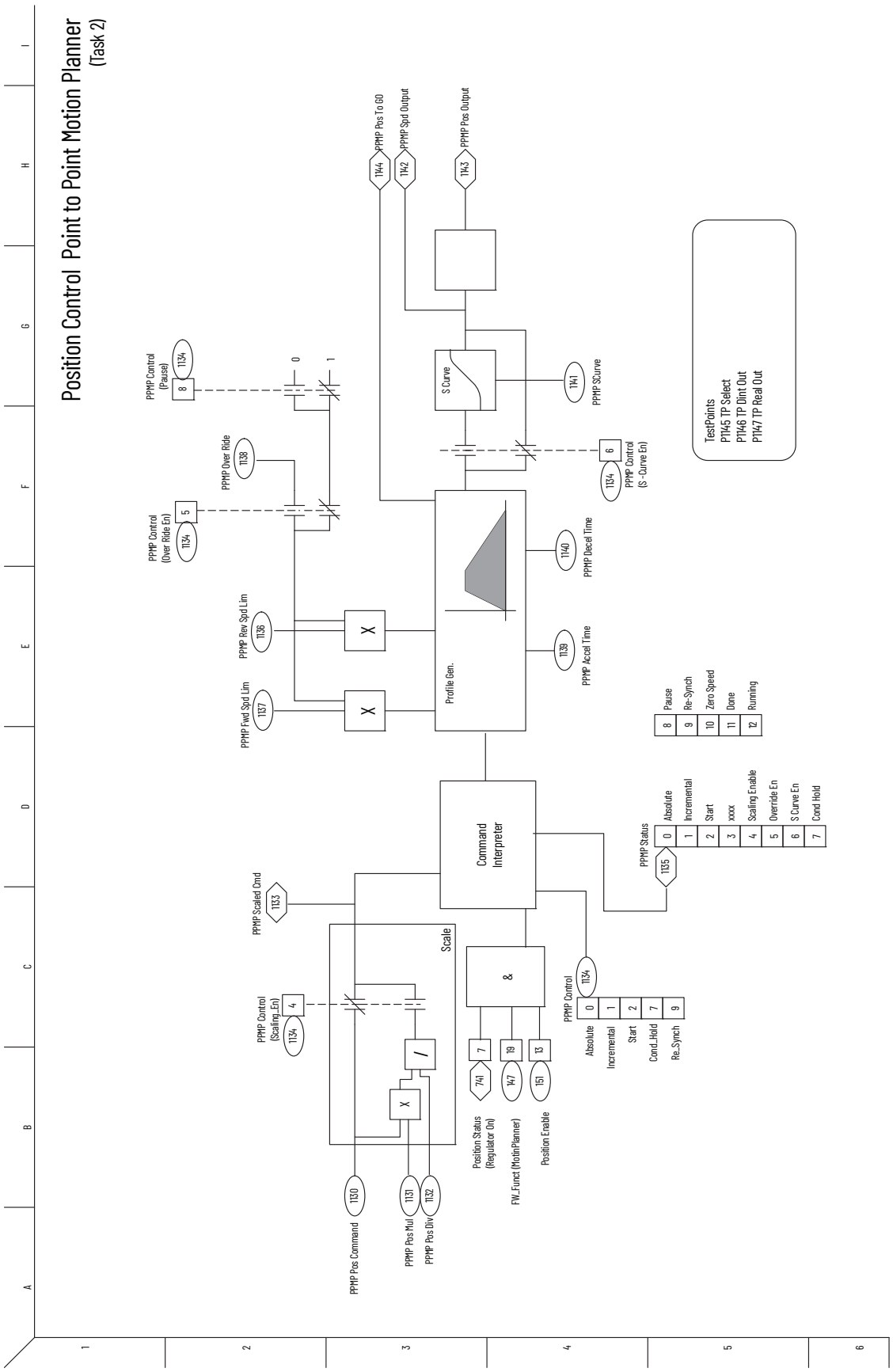
Position Control Point to Point Motion Planner
(Task 2)
PPMP Pos To GO
PPMP Spd Output
PPMP Pos Output
PPMP Control (Pause)
PPMP Over Ride
PPMP Control (Over Ride En)
PPMP Rev Spd Lim
PPMP Fwd Spd Lim
S Curve
PPMP SCurve
PPMP Control (S-Curve En)
PPMP Decel Time
PPMP Accel Time
Profile Gen.
TestPoints
PT145 TP Select
PT146 TP Dint Out
PT147 TP Real Out
Pause
Re-Synch
Zero Speed
Done
Running
Command Interpreter
PPMP Status
Absolute
Incremental
Start
xxxx
Scaling Enable
Override En
S Curve En
Cond Hold
PPMP Scaled Cmd
Scale
PPMP Control (Scaling_En)
PPMP Control
Cond_Hold
Re_Synch
Position Status (Regulator On)
FW_Funct (MotionPlanner)
Position Enable
PPMP Pos Command
PPMP Pos Mul
PPMP Pos Div

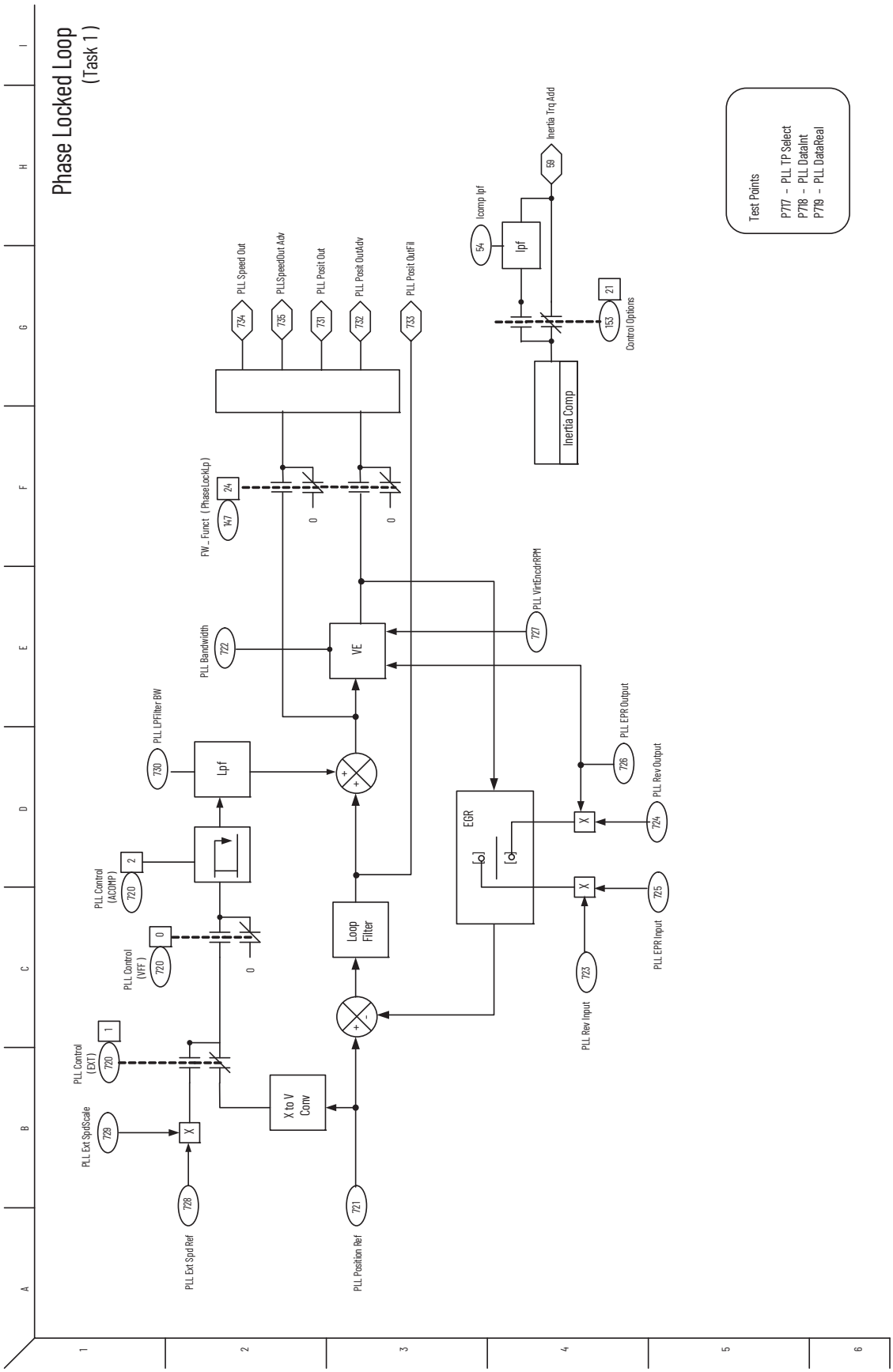
Phase Locked Loop
(Task 1)
PLL Speed Out
PLLSpeedOut Adv
PLL Posit Out
PLL Posit OutAdv
PLL Posit OutFil
734
735
731
732
733
Inertia Trq Add
59
Icomp lpf
54
Lpf
Inertia Comp
153
21
Control Options
FW_Funct (PhaseLockUp)
947
24
0
0
PLL Bandwidth
722
VE
PLL VirtEncdrRPM
727
PLL LPFilter BW
730
Lpf
PLL EPR Output
726
PLL Rev Output
724
EGR
PLL Control (ACDMP)
720
2
PLL Control (VFF)
720
0
0
Loop Filter
PLL EPR Input
725
PLL Rev Input
723
PLL Control (EXT)
720
1
PLL Ext SpdScale
729
X to V Conv
PLL Ext Spd Ref
728
PLL Position Ref
721
Test Points
P717 - PLL TP Select
P718 - PLL DataInt
P719 - PLL DataReal

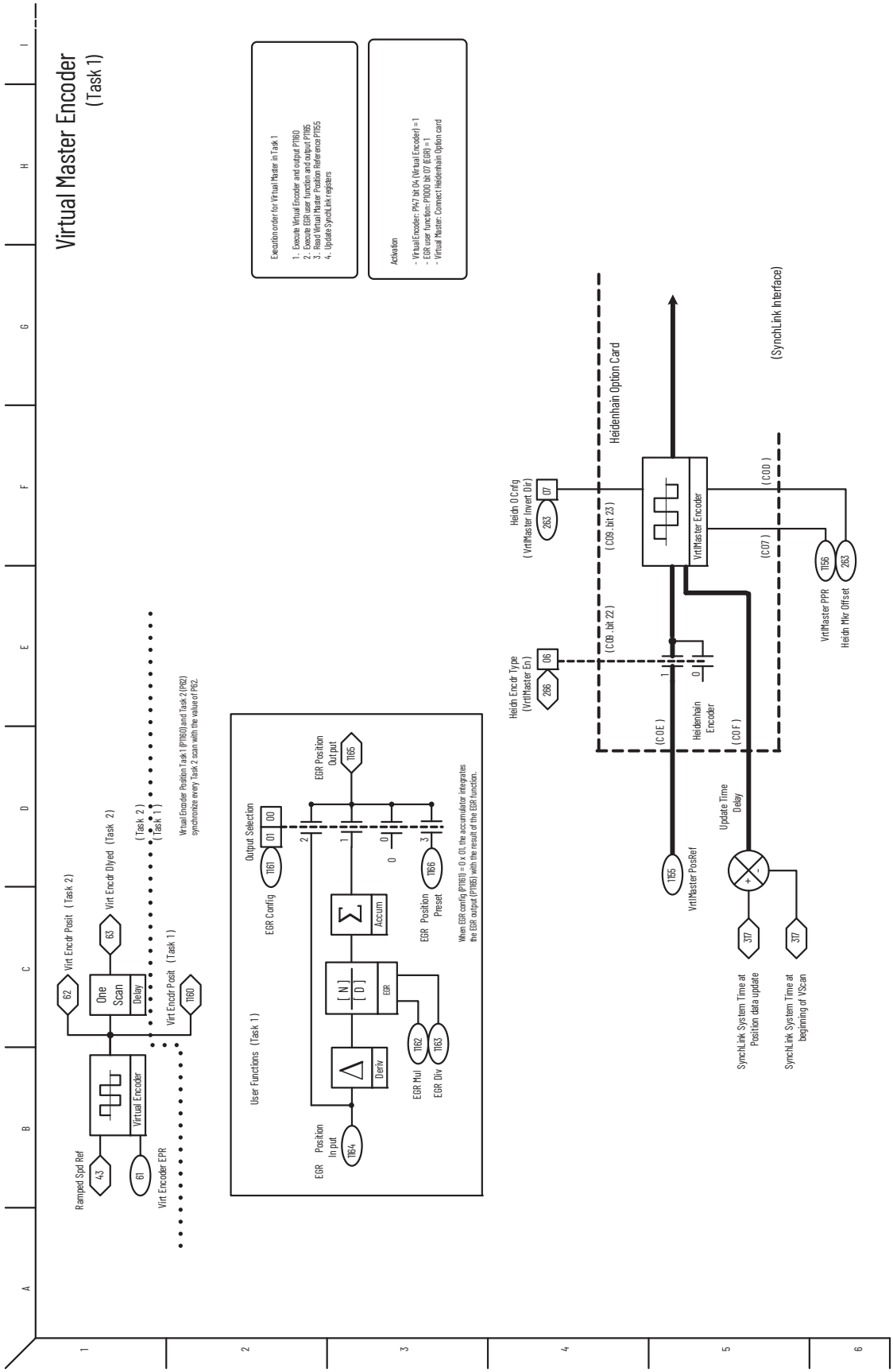
Virtual Master Encoder
(Task 1)
Execution order for Virtual Master in Task 1
1. Execute Virtual Encoder and output P1160
2. Execute EGR user function and output P1165
3. Read Virtual Master Position Reference P1155
4. Update SynchLink registers
Activation
- Virtual Encoder: PN7 bit 04 (Virtual Encoder) = 1
- EGR user function: P1000 bit 07 (EGR) = 1
- Virtual Master: Connect Heidenhain Option card
Ramped Spd Ref
43
Virtual Encoder
61
Virt Encoder EPR
Virt Encdr Posit (Task 2)
62
One Scan
Delay
Virt Encdr Dlyed (Task 2)
63
Virt Encdr Posit (Task 1)
1160
(Task 2)
(Task 1)
Virtual Encoder Position Task 1 (P1160) and Task 2 (P62) synchronize every Task 2 scan with the value of P62.
User Functions (Task 1)
EGR Position Input
1164
Deriv
EGR Mul
1162
EGR Div
1163
[N]
[D]
EGR
Accum
EGR Position Preset
1166
EGR Config
1161
Output Selection
01
00
2
1
0
0
3
EGR Position Output
1165
When EGR config (P1161) = 0 x 01, the accumulator integrates the EGR output (P1165) with the result of the EGR function.
Heidenhain Option Card
Heidn Encdr Type (VrtlMaster En)
266
06
(C0B. bit 22)
Heidn O.Crfg (VrtlMaster Invert Dir)
263
07
(C09. bit 23)
Heidenhain Encoder
VrtlMaster Encoder
(C0E)
(C0F)
(C0D)
(C07)
(SynchLink Interface)
VrtlMaster PosRef
1155
Update Time Delay
VrtlMaster PPR
1156
Heidn Mkr Offset
263
377
SynchLink System Time at Position data update
377
SynchLink System Time at beginning of VScan

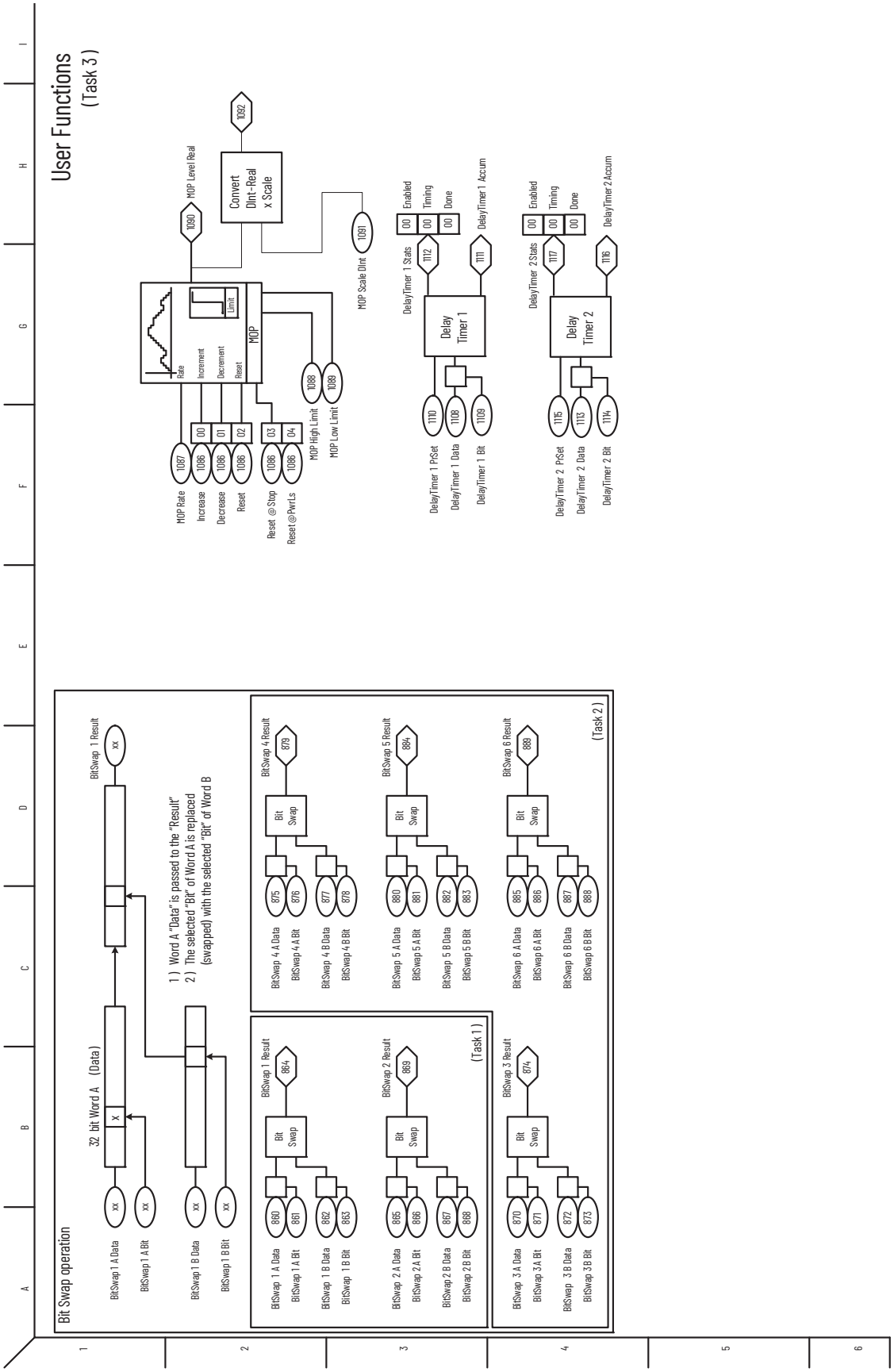
User Functions
(Task 3)
MOP Level Real
1090
Convert
DInt-Real
x Scale
1092
1091
MOP Scale DInt
Rate
Increment
Decrement
Reset
Limit
MOP
MOP Rate
Increase
Decrease
Reset
Reset @ Stop
Reset @ PwrLs
MOP High Limit
MOP Low Limit
1087
1086
1088
1089
Enabled
Timing
Done
DelayTimer 1 Stats
DelayTimer 1 Accum
1112
1111
Delay
Timer 1
DelayTimer 1 PrSet
DelayTimer 1 Data
DelayTimer 1 Bit
1110
1108
1109
DelayTimer 2 Stats
DelayTimer 2 Accum
1117
1116
Delay
Timer 2
DelayTimer 2 PrSet
DelayTimer 2 Data
DelayTimer 2 Bit
1115
1113
1114
Bit Swap operation
32 bit Word A (Data)
BitSwap 1 A Data
BitSwap 1 A Bit
BitSwap 1 B Data
BitSwap 1 B Bit
BitSwap 1 Result
1) Word A "Data" is passed to the "Result"
2) The selected "Bit" of Word A is replaced
(swapped) with the selected "Bit" of Word B
(Task 1)
BitSwap 1 Result
BitSwap 1 A Data
BitSwap 1 A Bit
BitSwap 1 B Data
BitSwap 1 B Bit
BitSwap 2 Result
BitSwap 2 A Data
BitSwap 2 A Bit
BitSwap 2 B Data
BitSwap 2 B Bit
BitSwap 3 Result
BitSwap 3 A Data
BitSwap 3 A Bit
BitSwap 3 B Data
BitSwap 3 B Bit
(Task 2)
BitSwap 4 Result
BitSwap 4 A Data
BitSwap 4 A Bit
BitSwap 4 B Data
BitSwap 4 B Bit
BitSwap 5 Result
BitSwap 5 A Data
BitSwap 5 A Bit
BitSwap 5 B Data
BitSwap 5 B Bit
BitSwap 6 Result
BitSwap 6 A Data
BitSwap 6 A Bit
BitSwap 6 B Data
BitSwap 6 B Bit
Bit
Swap

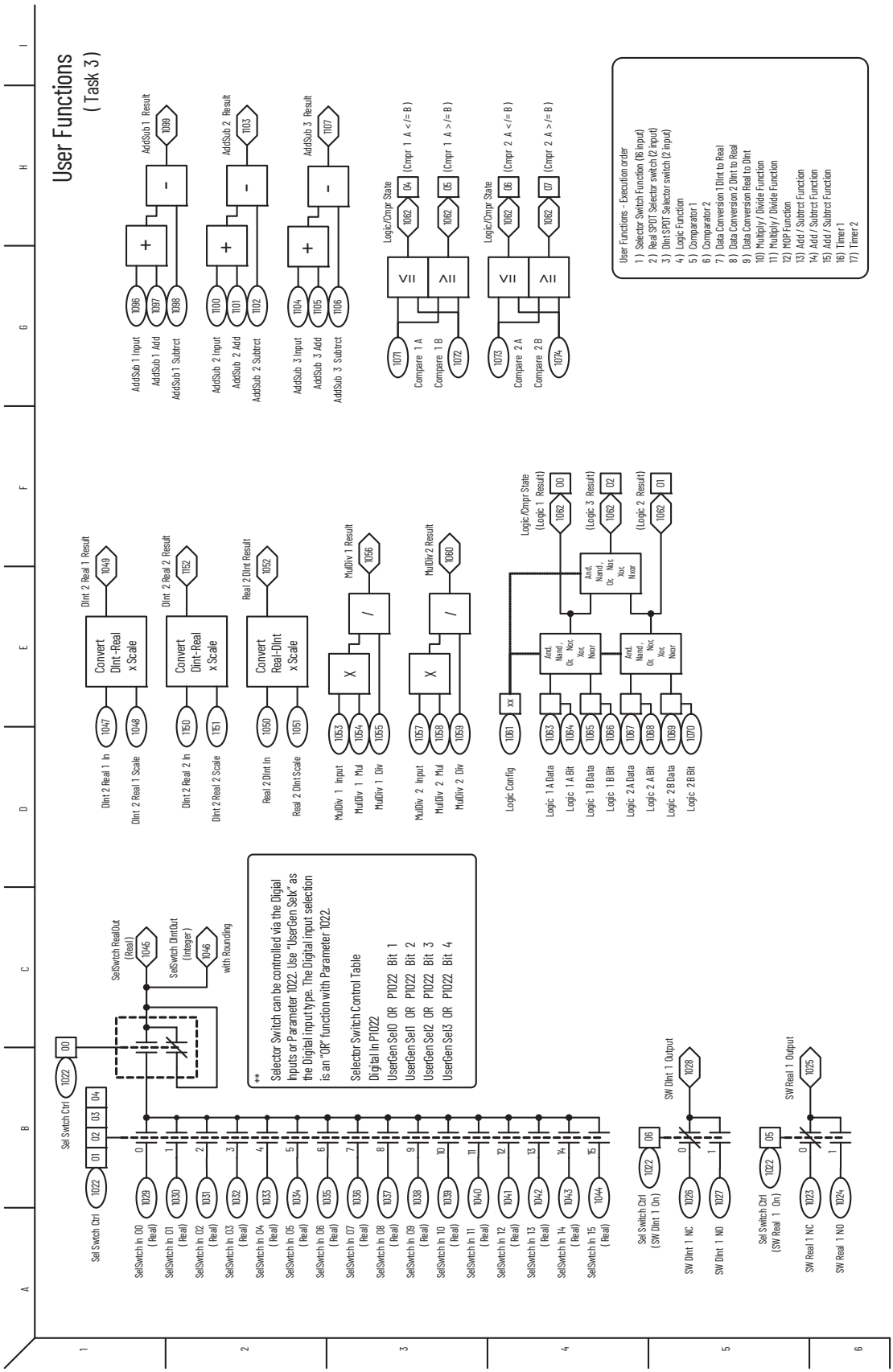
User Functions
(Task 3)
AddSub 1 Result
1099
AddSub 1 Input
AddSub 1 Add
AddSub 1 Subtract
1096
1097
1098
AddSub 2 Result
1103
AddSub 2 Input
AddSub 2 Add
AddSub 2 Subtract
1100
1101
1102
AddSub 3 Result
1107
AddSub 3 Input
AddSub 3 Add
AddSub 3 Subtract
1104
1105
1106
Logic/Cmpr State
(Cmpr 1 A <= B)
04
1062
(Cmpr 1 A >= B)
05
1062
Compare 1 A
Compare 1 B
1071
1072
Logic/Cmpr State
(Cmpr 2 A <= B)
06
1062
(Cmpr 2 A >= B)
07
1062
Compare 2 A
Compare 2 B
1073
1074
User Functions - Execution order
1) Selector Switch Function (16 input)
2) Real SPDT Selector switch (2 input)
3) Dint SPDT Selector switch (2 input)
4) Logic Function
5) Comparator 1
6) Comparator 2
7) Data Conversion 1 Dint to Real
8) Data Conversion 2 Dint to Real
9) Data Conversion Real to Dint
10) Multiply / Divide Function
11) Multiply / Divide Function
12) MOP Function
13) Add / Subtract Function
14) Add / Subtract Function
15) Add / Subtract Function
16) Timer 1
17) Timer 2
Dint 2 Real 1 Result
1049
Convert
Dint-Real
x Scale
Dint 2 Real 1 In
1047
Dint 2 Real 1 Scale
1048
Dint 2 Real 2 Result
1152
Convert
Dint-Real
x Scale
Dint 2 Real 2 In
1150
Dint 2 Real 2 Scale
1151
Real 2 Dint Result
1052
Convert
Real-Dint
x Scale
Real 2 Dint In
1050
Real 2 Dint Scale
1051
MulDiv 1 Result
1056
X
/
MulDiv 1 Input
MulDiv 1 Mul
MulDiv 1 Div
1053
1054
1055
MulDiv 2 Result
1060
X
/
MulDiv 2 Input
MulDiv 2 Mul
MulDiv 2 Div
1057
1058
1059
Logic/Cmpr State
(Logic 1 Result)
00
1062
(Logic 3 Result)
02
1062
(Logic 2 Result)
01
1062
And, Nand, Or, Nor, Xor, Nxor
xx
Logic Config
1061
Logic 1 A Data
Logic 1 A Bit
Logic 1 B Data
Logic 1 B Bit
Logic 2 A Data
Logic 2 A Bit
Logic 2 B Data
Logic 2 B Bit
1063
1064
1065
1066
1067
1068
1069
1070
SelSwitch RealOut
(Real)
1045
SelSwitch DintOut
(Integer)
1046
with Rounding
Sel Switch Ctrl
1022
00
01
02
03
04
**
Selector Switch can be controlled via the Digial Inputs or Parameter 1022. Use "UserGen Selx" as the Digital input type. The Digital input selection is an "OR" function with Parameter 1022.
Selector Switch Control Table
Digital In P1022
UserGen Sel0 OR P1022 Bit 1
UserGen Sel1 OR P1022 Bit 2
UserGen Sel2 OR P1022 Bit 3
UserGen Sel3 OR P1022 Bit 4
Sel Switch Ctrl
1022
0
1
2
3
4
5
6
7
8
9
10
11
12
13
14
15
SelSwitch In 00 (Real)
SelSwitch In 01 (Real)
SelSwitch In 02 (Real)
SelSwitch In 03 (Real)
SelSwitch In 04 (Real)
SelSwitch In 05 (Real)
SelSwitch In 06 (Real)
SelSwitch In 07 (Real)
SelSwitch In 08 (Real)
SelSwitch In 09 (Real)
SelSwitch In 10 (Real)
SelSwitch In 11 (Real)
SelSwitch In 12 (Real)
SelSwitch In 13 (Real)
SelSwitch In 14 (Real)
SelSwitch In 15 (Real)
1029
1030
1031
1032
1033
1034
1035
1036
1037
1038
1039
1040
1041
1042
1043
1044
Sel Switch Ctrl
(SW Dint 1 On)
06
1022
SW Dint 1 Output
1028
SW Dint 1 NC
SW Dint 1 NO
1026
1027
Sel Switch Ctrl
(SW Real 1 On)
05
1022
SW Real 1 Output
1025
SW Real 1 NC
SW Real 1 NO
1023
1024

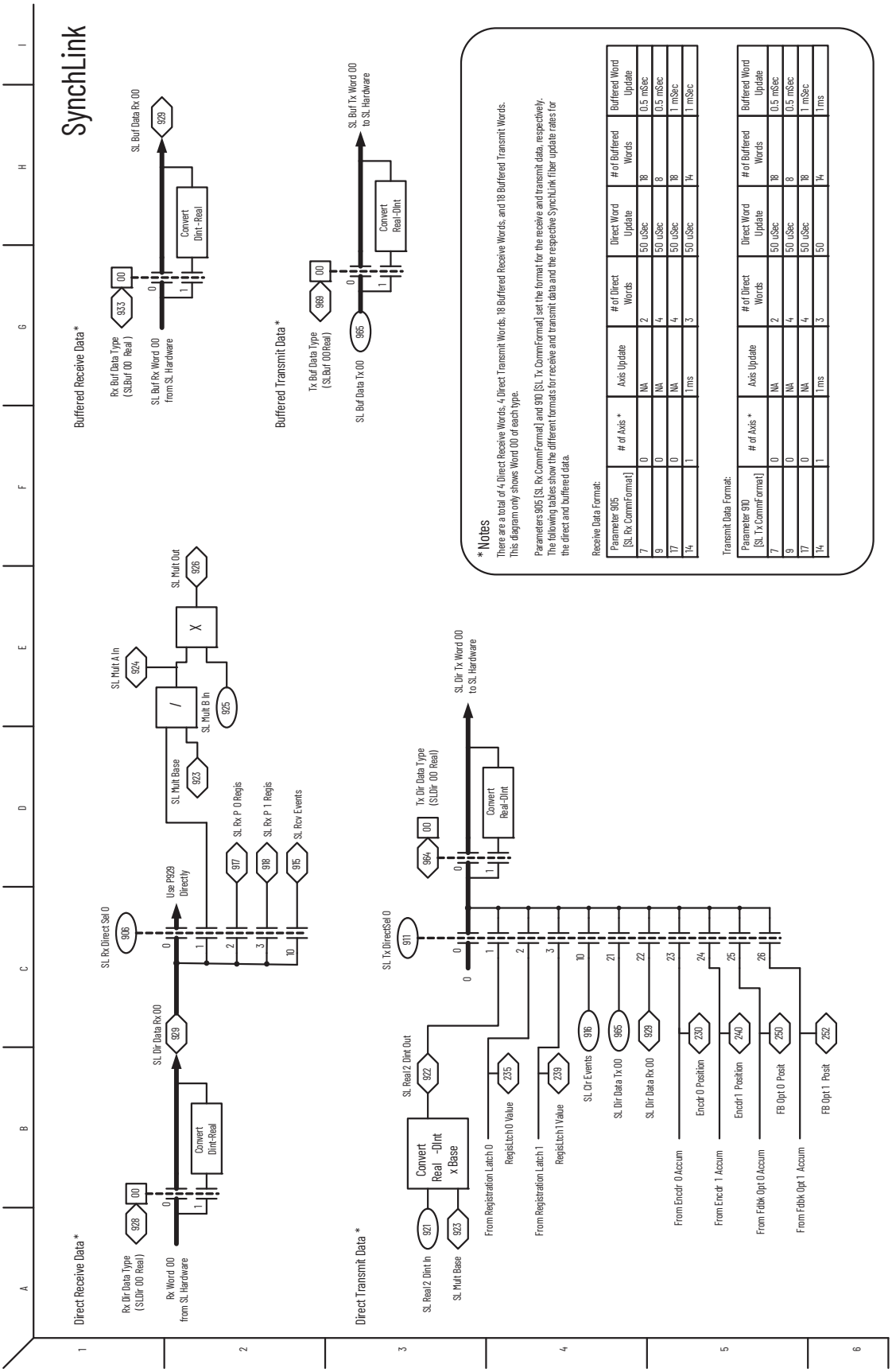

*Notes

There are a total of 4 Direct Receive Words, 4 Direct Transmit Words, 18 Buffered Receive Words, and 18 Buffered Transmit Words. This diagram only shows Word 00 of each type.

Parameters 905 [SL Rx CommFormat] and 910 [SL Tx CommFormat] set the format for the receive and transmit data, respectively. The following tables show the different formats for receive and transmit data and the respective SynchLink fiber update rates for the direct and buffered data.

Receive Data Format:

Parameter 905 [SL Rx CommFormat]	# of Axis *	Axis Update	# of Direct Words	Direct Word Update	# of Buffered Words	Buffered Word Update
7	0	NA	2	50 uSec	18	0.5 mSec
9	0	NA	4	50 uSec	8	0.5 mSec
17	0	NA	4	50 uSec	18	1 mSec
14	1	1 ms	3	50 uSec	14	1 mSec

Transmit Data Format:

Parameter 910 [SL Tx CommFormat]	# of Axis *	Axis Update	# of Direct Words	Direct Word Update	# of Buffered Words	Buffered Word Update
7	0	NA	2	50 uSec	18	0.5 mSec
9	0	NA	4	50 uSec	8	0.5 mSec
17	0	NA	4	50 uSec	18	1 mSec
14	1	1 ms	3	50	14	1 ms

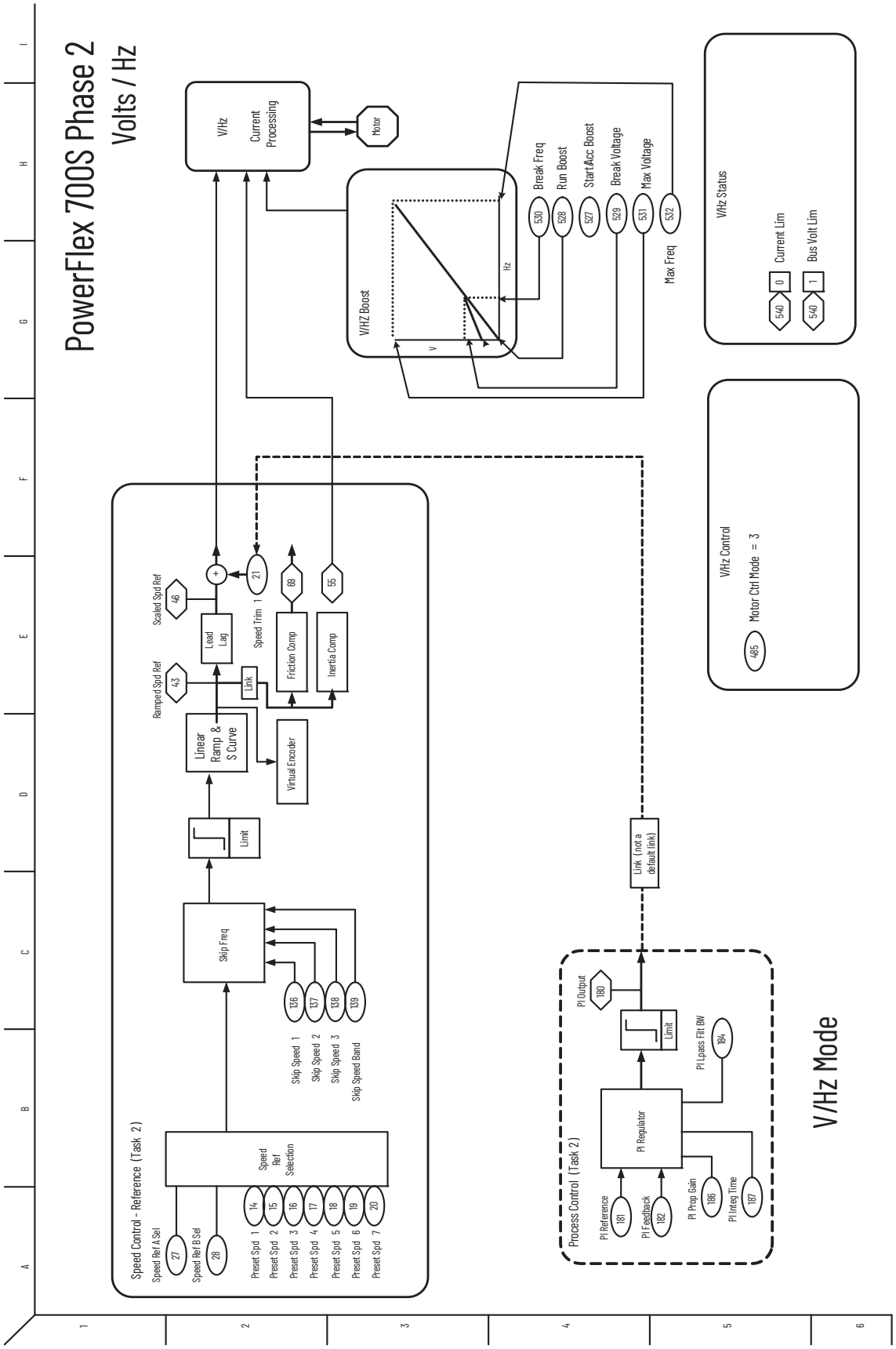
PowerFlex 700S Phase 2
Volts / Hz
V/Hz
Current Processing
Motor
V/HZ Boost
V
Hz
Break Freq
Run Boost
Start/Acc Boost
Break Voltage
Max Voltage
Max Freq
530
528
527
529
531
532
V/Hz Status
Current Lim
Bus Volt Lim
540
0
1
V/Hz Control
Motor Ctrl Mode = 3
485
Speed Control - Reference (Task 2)
Speed Ref A Sel
Speed Ref B Sel
27
28
Speed Ref Selection
Preset Spd 1
Preset Spd 2
Preset Spd 3
Preset Spd 4
Preset Spd 5
Preset Spd 6
Preset Spd 7
14
15
16
17
18
19
20
Skip Freq
136
137
138
139
Skip Speed 1
Skip Speed 2
Skip Speed 3
Skip Speed Band
Limit
Linear Ramp & S Curve
Virtual Encoder
Ramped Spd Ref
43
Link
Lead Lag
Scaled Spd Ref
46
Speed Trim 1
21
Friction Comp
69
Inertia Comp
55
Link (not a default link)
Process Control (Task 2)
PI Reference
181
PI Feedback
182
PI Regulator
PI Prop Gain
186
PI Integ Time
187
PI Lpass Filt BW
194
Limit
PI Output
180
V/Hz Mode

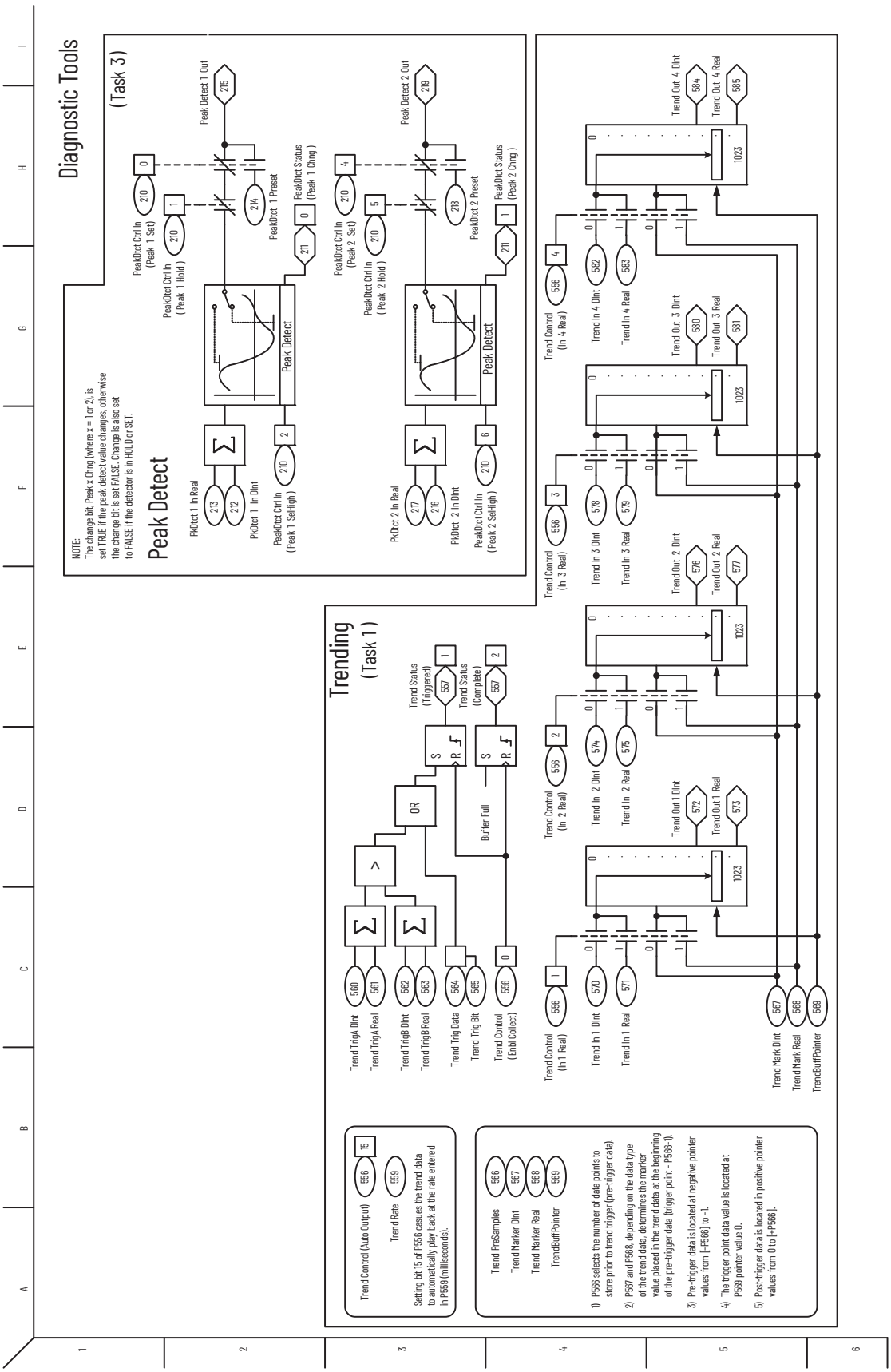
Diagnostic Tools
(Task 3)
NOTE:
The change bit, Peak x Chng (where x = 1 or 2), is set TRUE if the peak detect value changes, otherwise the change bit is set FALSE. Change is also set to FALSE if the detector is in HOLD or SET.
Peak Detect
PkDtct 1 In Real
PkDtct 1 In Dint
PeakDtct Ctrl In (Peak 1 SetHigh)
PeakDtct Ctrl In (Peak 1 Set)
PeakDtct Ctrl In (Peak 1 Hold)
Peak Detect
PeakDtct 1 Preset
Peak Detect 1 Out
PeakDtct Status (Peak 1 Chng)
PkDtct 2 In Real
PkDtct 2 In Dint
PeakDtct Ctrl In (Peak 2 SetHigh)
PeakDtct Ctrl In (Peak 2 Set)
PeakDtct Ctrl In (Peak 2 Hold)
Peak Detect
PeakDtct 2 Preset
Peak Detect 2 Out
PeakDtct Status (Peak 2 Chng)
Trending
(Task 1)
Trend Trig A Dint
Trend Trig A Real
Trend Trig B Dint
Trend Trig B Real
Trend Trig Data
Trend Trig Bit
Trend Control (Enbl Collect)
OR
Buffer Full
Trend Status (Triggered)
Trend Status (Complete)
Trend Control (In 1 Real)
Trend In 1 Dint
Trend In 1 Real
Trend Control (In 2 Real)
Trend In 2 Dint
Trend In 2 Real
Trend Out 1 Dint
Trend Out 1 Real
Trend Control (In 3 Real)
Trend In 3 Dint
Trend In 3 Real
Trend Out 2 Dint
Trend Out 2 Real
Trend Control (In 4 Real)
Trend In 4 Dint
Trend In 4 Real
Trend Out 3 Dint
Trend Out 3 Real
Trend Out 4 Dint
Trend Out 4 Real
Trend Mark Dint
Trend Mark Real
TrendBuffPointer
Trend Control (Auto Output)
Trend Rate
Setting bit 15 of P556 casues the trend data to automatically play back at the rate entered in P559 (milliseconds).
Trend PreSamples
Trend Marker Dint
Trend Marker Real
TrendBuffPointer
1) P566 selects the number of data points to store prior to trend trigger (pre-trigger data).
2) P567 and P568, depending on the data type of the trend data, determines the marker value placed in the trend data at the beginning of the pre-trigger data [trigger point - P566-1].
3) Pre-trigger data is located at negative pointer values from [-P566] to -1.
4) The trigger point data value is located at P568 pointer value 0.
5) Post-trigger data is located in positive pointer values from 0 to [+P566].

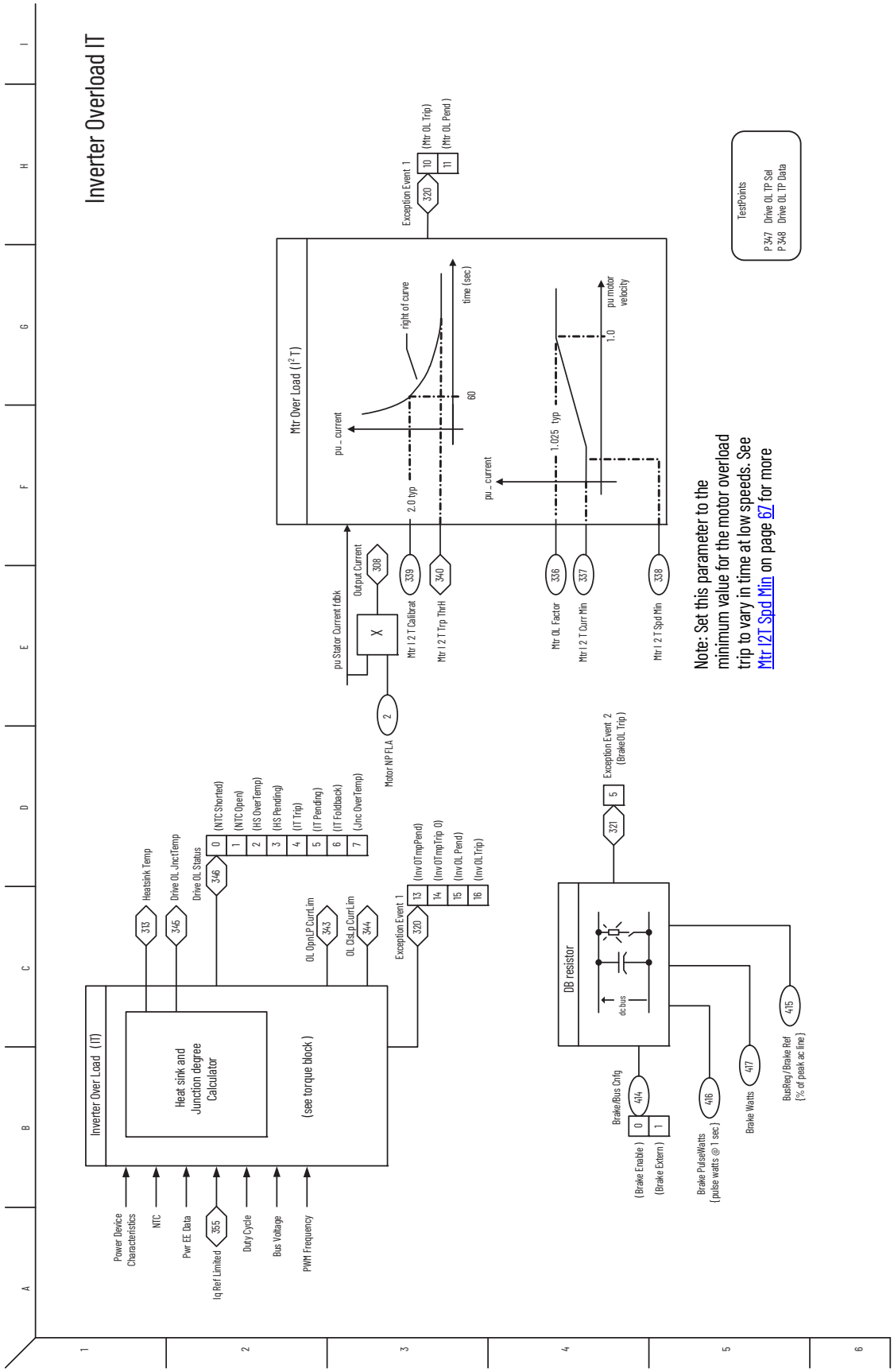
Inverter Overload IT
Inverter Over Load (IT)
Heat sink and Junction degree Calculator
(see torque block)
Power Device Characteristics
NTC
Pwr EE Data
Iq Ref Limited
Duty Cycle
Bus Voltage
PWM Frequency
355
Heatsink Temp
313
Drive OL JnctTemp
345
Drive OL Status
346
0 (NTC Shorted)
1 (NTC Open)
2 (HS OverTemp)
3 (HS Pending)
4 (IT Trip)
5 (IT Pending)
6 (IT Foldback)
7 (Junc OverTemp)
OL OpnLP CurrLim
343
OL Clsd p CurrLim
344
Exception Event 1
320
13 (Inv OTmpPend)
14 (Inv OTmpTrip 0)
15 (Inv OL Pend)
16 (Inv OL Trip)
Motor NP FLA
2
pu Stator Current fdbk
X
Output Current
308
Mtr I 2 T Calibrat
339
Mtr I 2 T Trip Thrh
340
Mtr Over Load (I2T)
pu _ current
right of curve
time (sec)
60
2.0 typ
pu _ current
1.025 typ
1.0
pu motor velocity
Mtr OL Factor
336
Mtr I 2 T Curr Min
337
Mtr I 2 T Spd Min
338
Exception Event 1
320
10 (Mtr OL Trip)
11 (Mtr OL Pend)
TestPoints
P 347 Drive OL TP Sel
P 348 Drive OL TP Data
Note: Set this parameter to the minimum value for the motor overload trip to vary in time at low speeds. See Mtr I2T Spd Min on page 67 for more
DB resistor
dc bus
Exception Event 2 (BrakeOL Trip)
321
5
Brake/Bus Cnfg
414
0 (Brake Enable)
1 (Brake Extern)
Brake PulseWatts (pulse watts @ 1 sec)
416
Brake Watts
417
BusReg/Brake Ref (% of peak ac line)
415

PowerFlex 700S Phase 2
DriveLogix - Speed Control

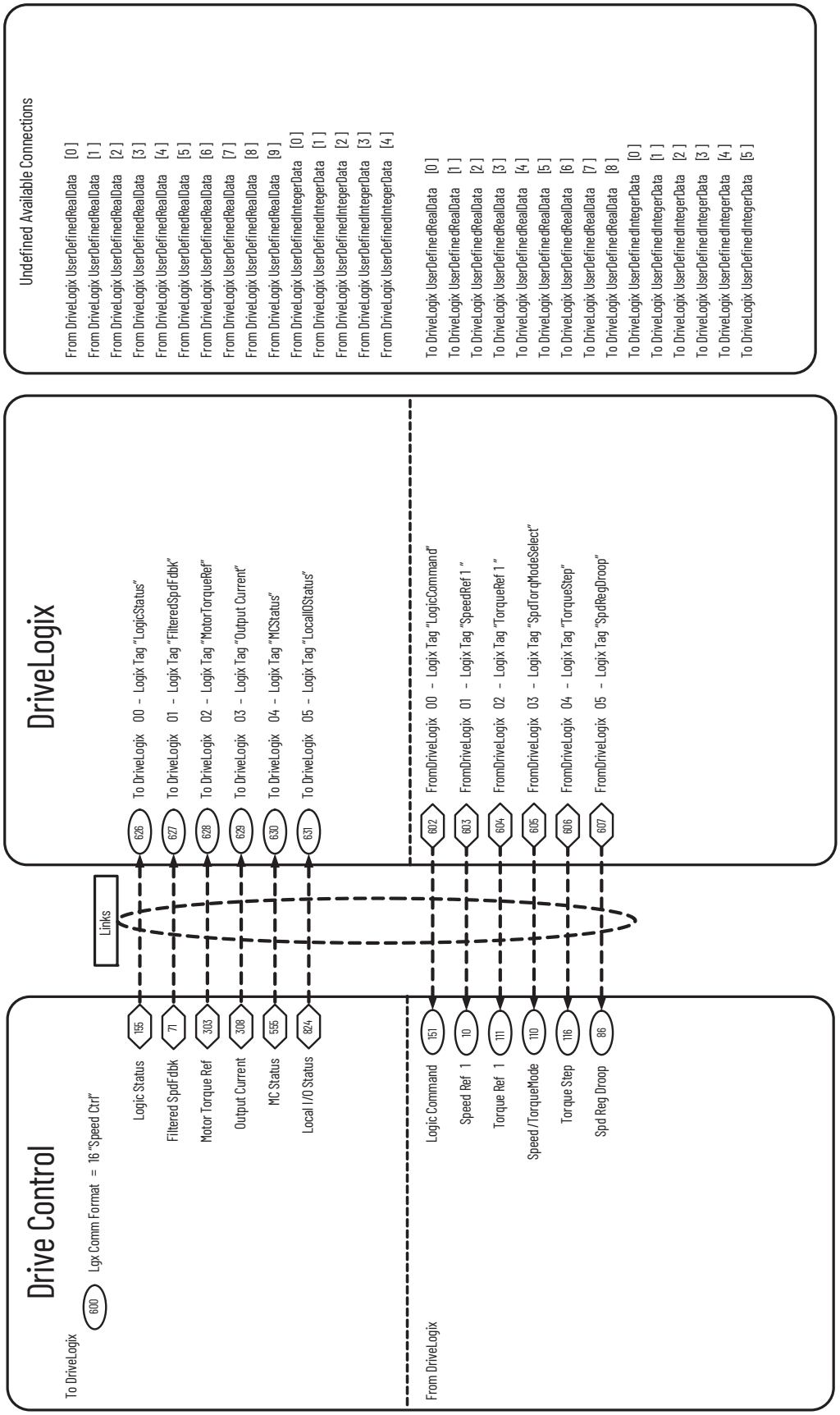

PowerFlex 700S Phase 2
DriveLogix - Position Control

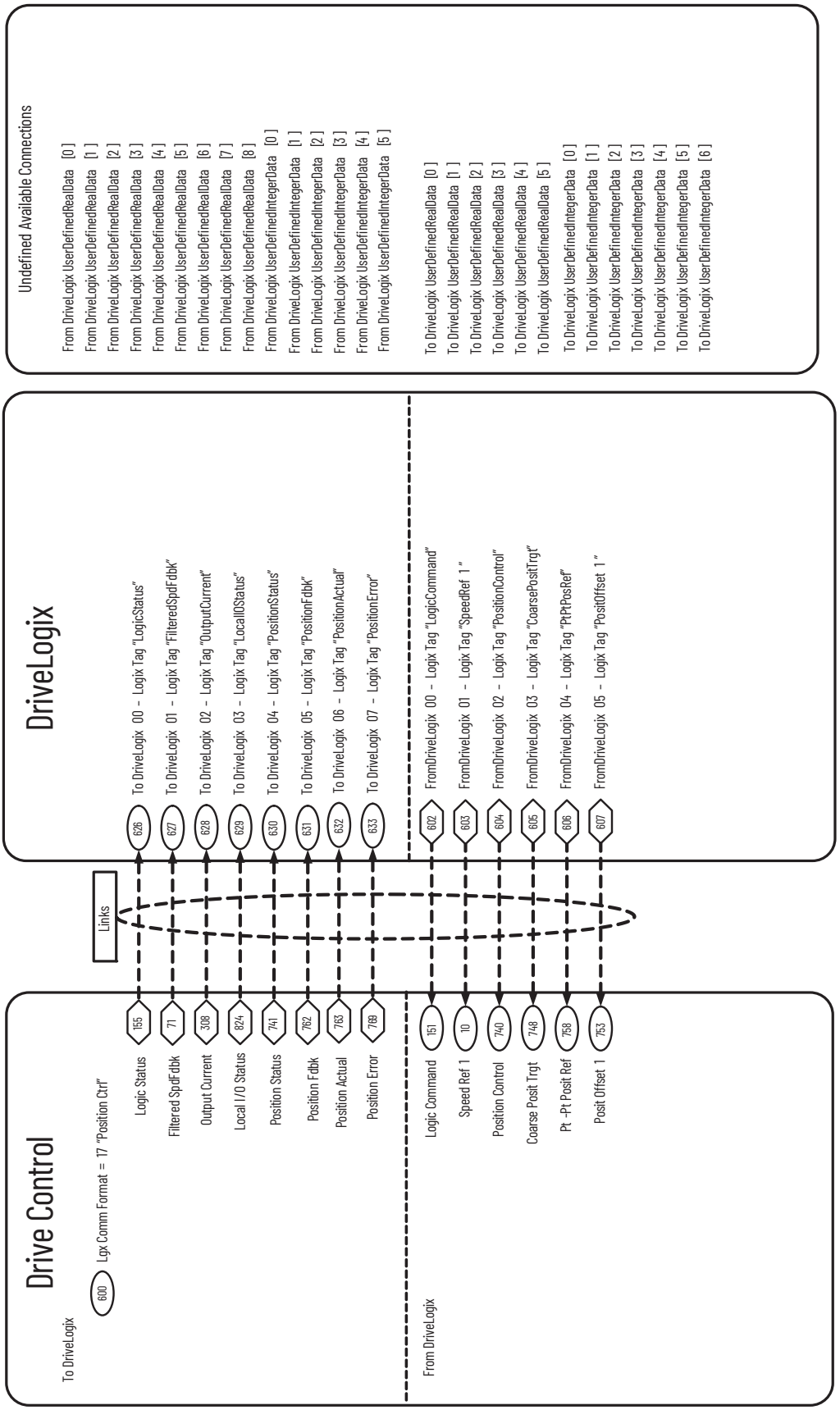

PowerFlex 700S Phase 2
DriveLogix - Motion Control

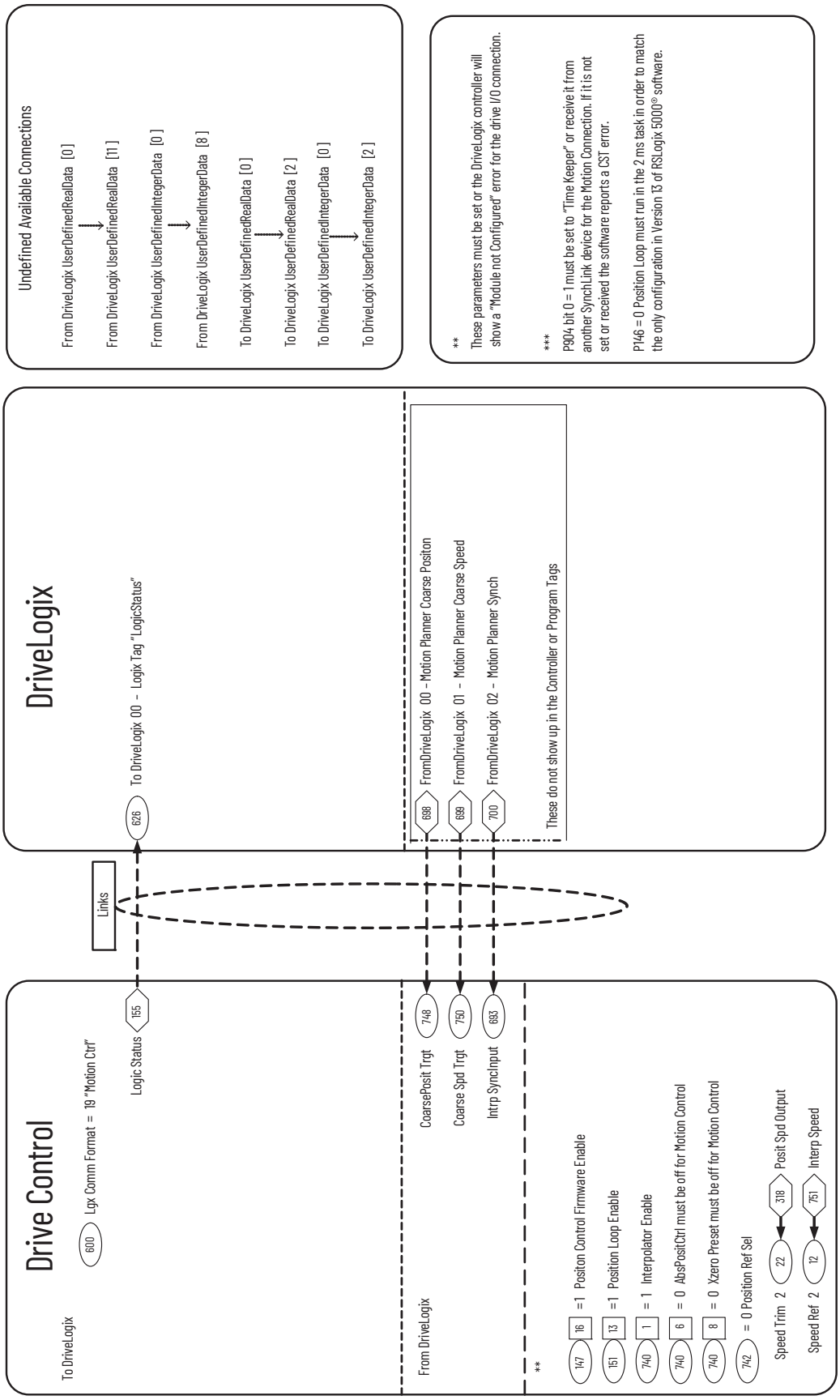

PowerFlex 700S Permanent Magnet Motor Specifications

Compatible Permanent Magnet Motors

The following table contains a list of specifications for the permanent magnet motors compatible with PowerFlex® 700S drives. Note that you must have a high resolution Stegmann or Heidenhain encoder or compatible resolver.

Table 10 - Motor Name Plate and Rating Specifications

Parameter No.	1	2	3	4	5	7			
Model Number	**Motor NP Volts (line to line V rms)**	**Motor NP FLA (A rms)**	**Motor NP Frequency (Hz)**	**Motor NP RPM (oper. rpm)**	**Motor NP Power (KW)**	**Motor Poles**	**Current peak (A rms)**	**System Cont. Stall Torque (N•m)**	**Motor Max RPM (rpm)**
MPM-A1151M	240	4.2	333.3	5000	0.90	8	21.6	2.18	6000
MPM-A1152F	240	5.9	266.7	4000	1.40	8	31.7	4.74	5000
MPM-A1302F	240	7.4	266.7	4000	1.65	8	35.6	5.99	4500
MPM-A1304F	240	8.1	233.3	3500	2.20	8	34.2	9.30	4000
MPM-A1651F	240	14.5	200.0	3000	2.50	8	52.2	10.70	5000
MPM-A1652F	240	18.1	233.3	3500	4.03	8	73.0	13.50	4000
MPM-A1653F	240	23.2	200.0	3000	5.10	8	84.3	18.60	4000
MPM-A2152F	240	33.7	133.3	2000	5.20	8	89.0	27.00	4000
MPM-A2153F	240	32.8	133.3	2000	5.80	8	85.2	34.00	4600
MPM-A2154C	240	24.8	116.7	1750	6.50	8	89.8	55.00	2000
MPM-A2154E	240	29.6	133.3	2000	7.00	8	90.7	44.00	2650
MPM-B1151F	480	1.5	266.7	4000	0.75	8	7.0	2.18	5000
MPM-B1151T	480	3.1	333.3	5000	0.90	8	14.5	2.18	7000
MPM-B1152C	480	2.3	166.7	2500	1.20	8	8.8	2.18	3000
MPM-B1152F	480	2.9	266.7	4000	1.40	8	15.5	4.74	5200
MPM-B1152T	480	5.2	266.7	4000	1.40	8	26.8	4.74	7000
MPM-B1153E	480	2.7	200.0	3000	1.40	8	15.3	6.55	3500
MPM-B1153F	480	3.2	266.7	4000	1.45	8	22.6	6.55	5500
MPM-B1153T	480	5.5	266.7	4000	1.45	8	39.2	6.55	7000
MPM-B1302F	480	3.4	266.7	4000	1.65	8	15.6	5.99	4500
MPM-B1302M	480	5.0	266.7	4000	1.65	8	22.6	5.99	6000
MPM-B1302T	480	6.6	266.7	4000	1.65	8	30.7	5.99	7000
MPM-B1304C	480	3.4	183.3	2750	2.00	8	15.8	10.20	2750
MPM-B1304E	480	4.1	166.7	2500	2.20	8	24.2	10.20	4000
MPM-B1304M	480	7.3	233.3	3500	2.20	8	42.9	10.20	6000
MPM-B1651C	480	4.7	200.0	3000	2.50	8	20.6	10.70	3500
MPM-B1651F	480	8.2	200.0	3000	2.50	8	36.0	10.70	5000
MPM-B1651M	480	10.9	200.0	3000	2.50	8	40.2	10.70	5000
MPM-B1652C	480	7.0	166.7	2500	3.80	8	23.8	16.00	2500
MPM-B1652E	480	8.0	233.3	3500	4.30	8	42.8	19.40	3500
MPM-B1652F	480	11.0	233.3	3500	4.30	8	59.5	19.40	4500
MPM-B1653C	480	10.5	133.3	2000	4.60	8	41.9	26.80	2500
MPM-B1653E	480	10.2	200.0	3000	5.10	8	51.6	26.80	3500
MPM-B1653F	480	13.2	200.0	3000	5.10	8	66.7	26.80	4000

Parameter No.	1	2	3	4	5	7			
Model Number	**Motor NP Volts (line to line V rms)**	**Motor NP FLA (A rms)**	**Motor NP Frequency (Hz)**	**Motor NP RPM (oper. rpm)**	**Motor NP Power (KW)**	**Motor Poles**	**Current peak (A rms)**	**System Cont. Stall Torque (N•m)**	**Motor Max RPM (rpm)**
MPM-B2152C	480	12.3	133.3	2000	5.60	8	39.2	36.70	2500
MPM-B2152F	480	18.7	166.7	2500	5.90	8	69.3	33.00	4500
MPM-B2152M	480	21.0	166.7	2500	5.90	8	54.0	30.00	5000
MPM-B2153B	480	12.7	116.7	1750	6.80	8	42.4	48.00	2000
MPM-B2153E	480	19.3	133.3	2000	7.20	8	69.7	48.00	3000
MPM-B2153F	480	22.1	133.3	2000	7.20	8	69.6	45.00	3800
MPM-B2154B	480	13.9	116.7	1750	6.90	8	69.3	62.80	2000
MPM-B2154E	480	18.3	133.3	2000	7.50	8	69.5	56.00	3000
MPM-B2154F	480	19.8	133.3	2000	7.50	8	59.3	56.00	3300
MPL-A310P	230	3.4	294.0	4410	0.73	8	9.9,	1.58	5000
MPL-A310F	230	2.1	185.3	2780	0.46	8	6.6	1.58	3000
MPL-A320P	230	6.4	271.3	4070	1.30	8	20.9	3.05	5000
MPL-A320H	230	4.6	208.7	3130	1.00	8	13.6	3.05	3500
MPL-A330P	230	8.5	280.7	4210	1.80	8	26.9	4.08	5000
MPL-A420P	230	9.0	268.7	4030	2.00	8	32.5	4.74	5000
MPL-A430P	230	11.9	234.0	3510	2.20	8	47.4	5.99	5000
MPL-A430H	230	8.6	184.7	2770	1.80	8	31.8	6.21	3500
MPL-A4520P	230	12.4	234.0	3510	2.20	8	35.4	5.99	5000
MPL-A4520K	230	10.6	223.3	3350	2.10	8	30.4	5.99	4000
MPL-A4530F	230	9.5	144.7	2170	1.90	8	29.7	8.36	2800
MPL-A4530K	230	14.4	196.0	2940	2.50	8	43.8	8.13	4000
MPL-A4540C	230	6.6	93.3	1400	1.50	8	20.5	10.20	1500
MPL-A4540F	230	13.0	162.0	2430	2.60	8	38.2	10.20	3000
MPL-A520K	230	16.3	208.0	3120	3.50	8	46.0	10.70	4000
MPL-A540K(1)	230	29.3	180.7	2710	5.50	8	84.9	19.40	4000
MPL-A560F	230	29.3	125.3	1880	5.50	8	84.9	27.90	3000
MPL-B310P	460	1.7	310.0	4650	0.77	8	3.0	1.58	5000
MPL-B320P	460	3.2	313.3	4700	1.50	8	5.0	3.05	5000
MPL-B330P	460	4.3	274.0	4110	1.80	8	7.0	4.18	5000
MPL-B420P(1)	460	4.5	255.3	3830	1.90	8	9.2	4.74	5000
MPL-B430P(1)	460	6.5	214.0	3210	2.20	8	12.0	6.55	5000
MPL-B4520P	460	6.0	236.7	3550	2.10	8	17.0	5.65	5000
MPL-B4530F	460	5.0	162.0	2430	2.10	8	13.4	8.25	3000
MPL-B4530K	460	7.8	200.7	3010	2.60	8	19.1	8.25	4000
MPL-B4540F	460	6.4	162.0	2430	2.60	8	16.3	10.20	3000
MPL-B4560F	460	8.3	144.7	2170	3.20	8	25.5	14.10	3000
MPL-B520K(1)	460	8.1	208.0	3120	3.50	8	23.3	10.70	4000
MPL-B540K(1)	460	14.5	177.3	2660	5.40	8	42.4	19.40	4000
MPL-B560F	460	14.5	130.7	1960	5.50	8	42.4	26.80	3000
MPL-B580F	460	18.4	132.7	1990	7.10	8	66.5	34.00	3000
MPL-B580J(1)	460	22.6	148.0	2220	7.90	8	66.5	34.00	3800
MPL-B640F	460	22.7	106.0	1590	6.11	8	46.0	36.70	3000
MPL-B660F	460	27.2	81.3	1220	6.15	8	67.9	48.00	3000
MPL-B680D	460	24.0	94.0	1410	9.30	8	66.5	62.80	2000
MPL-B680F	460	33.9	79.3	1190	7.50	8	67.9	60.00	3000
MPL-B860D(1)	460	33.6	96.0	1440	12.50	8	67.5	83.10	2000
MPL-B880C(1)	460	33.6	72.7	1090	12.60	8	69.0	110.00	1500
MPL-B880D(1)	460	40.3	86.7	1300	15.00	8	113.2	110.00	2000
MPL-B960B(1)	460	29.7	62.0	930	12.70	8	63.6	130.00	1200

Parameter No.	1	2	3	4	5	7			
Model Number	**Motor NP Volts (line to line V rms)**	**Motor NP FLA (A rms)**	**Motor NP Frequency (Hz)**	**Motor NP RPM (oper. rpm)**	**Motor NP Power (KW)**	**Motor Poles**	**Current peak (A rms)**	**System Cont. Stall Torque (N•m)**	**Motor Max RPM (rpm)**
MPL-B960C[1]	460	38.9	76.0	1140	14.80	8	88.4	124.30	1500
MPL-B960D[1]	460	50.2	76.7	1150	15.00	8	102.5	124.30	2000
MPL-B980B[1]	460	31.8	59.3	890	15.02	8	70.7	162.70	1000
MPL-B980C[1]	460	48.2	67.3	1010	16.80	8	99.0	158.20	1500
MPL-B980D[1]	460	63.6	74.7	1120	18.60	8	141.4	158.20	2000
MPG-A004-031	230	1.8	222.7	3340	0.21	8	4.0	0.60	6000
MPG-A010-031	230	2.1	189.3	2840	0.36	8	6.0	1.21	4875
MPG-A010-091	230	0.9	295.3	4430	0.19	8	2.3	0.41	5900
MPG-A025-031	230	9.9	181.0	1810	0.88	12	19.8	4.65	5200
MPG-A025-091	230	3.0	168.0	1680	0.52	12	8.5	2.95	5625
MPG-A050-031	230	24.7	120.0	1200	1.50	12	53.0	11.90	2510
MPG-A050-091	230	5.0	275.0	2750	0.75	12	15.6	2.60	3775
MPG-A110-031	230	20.2	122.0	1220	2.20	12	53.0	17.20	2875
MPG-A110-091	230	17.0	184.0	1840	1.60	12	33.2	8.30	3500
MPG-B010-031	460	1.6	162.7	2440	0.34	8	4.4	1.33	6450
MPG-B010-091	460	0.7	357.3	5360	0.23	8	1.5	0.41	6450
MPG-B025-031	460	4.0	219.0	2190	0.92	12	11.3	4.02	4838
MPG-B025-091	460	1.9	175.0	1750	0.54	12	5.2	2.95	5900
MPG-B050-031	460	16.3	92.0	920	1.20	12	32.5	12.40	2510
MPG-B050-091	460	3.4	290.0	2900	0.79	12	9.9	2.60	4560
MPG-B110-031	460	12.9	112.0	1120	2.00	12	31.1	17.00	2420
MPG-B110-091	460	10.6	184.0	1840	1.60	12	20.5	8.30	3500
1326AB-B410G	460	2.5	118.0	3540	1.00	4	7.4	2.70	5000
1326AB-B410J	460	3.5	165.0	4950	1.40	4	10.4	2.70	7250
1326AB-B420E	460	2.8	70.0	2100	1.10	4	8.5	5.00	3000
1326AB-B420H	460	5.5	137.3	4120	2.20	4	15.6	5.10	6000
1326AB-B430E	460	3.9	67.7	2030	1.40	4	11.7	6.60	3000
1326AB-B430G	460	5.6	114.3	3430	2.30	4	16.8	6.40	5000
1326AB-B515E	460	6.1	70.3	2110	2.30	4	18.3	10.40	3000
1326AB-B515G	460	9.5	88.7	2660	2.90	4	28.5	10.40	5000
1326AB-B520E	460	6.7	71.0	2130	2.90	4	20.1	13.00	3000
1326AB-B520F	460	8.8	70.3	2110	2.90	4	26.4	13.10	3500
1326AB-B530E	460	9.5	74.3	2230	4.20	4	28.5	18.00	3000
1326AB-B720E	460	17.5	70.0	2100	6.80	4	52.5	30.90	3500
1326AB-B720F	460	27.5	117.0	3510	11.70	4	66.5	31.80	5000
1326AB-B730E	460	22.8	78.3	2350	9.60	4	66.5	39.00	3350
1326AB-B740C	460	20.9	52.3	1570	8.70	4	62.7	53.00	2200
1326AB-B740E	460	32.0	79.7	2390	12.70	4	66.5	50.80	3400
1326AS-B310H	460	0.8	204.5	4090	0.30	6	2.4	0.70	6200
1326AS-B330H	460	2.1	204.5	4090	0.90	6	6.0	2.10	6500
1326AS-B420G	460	2.6	179.0	3580	1.20	6	7.8	3.20	5250
1326AS-B440G	460	5.4	149.0	2980	2.00	6	16.2	6.40	5250
1326AS-B460F	460	6.2	148.5	2970	2.80	6	18.6	9.00	4300
1326AS-B630F	460	7.8	142.7	2140	2.40	8	18.5	10.70	4500
1326AS-B660E	460	11.8	100.7	1510	3.40	8	29.8	21.50	3000
1326AS-B690E	460	19.0	87.3	1310	5.00	8	41.3	36.40	3000
1326AS-B840E	460	21.2	79.3	1190	4.70	8	39.5	37.60	3000
1326AS-B860C	460	17.6	77.3	1160	6.00	8	44.4	49.30	2000

Parameter No.	1	2	3	4	5	7			
Model Number	**Motor NP Volts (line to line V rms)**	**Motor NP FLA (A rms)**	**Motor NP Frequency (Hz)**	**Motor NP RPM (oper. rpm)**	**Motor NP Power (KW)**	**Motor Poles**	**Current peak (A rms)**	**System Cont. Stall Torque (N•m)**	**Motor Max RPM (rpm)**
1326AH-B330F	460	2.1	0.0	3000	0.75	-	9.0	-	3000
1326AH-B440F	460	3.3	0.0	2500	1.22	-	13.8	-	2500
1326AH-B540F	460	11.1	0.0	2500	2.60	-	47.2	-	2500
3050R-7	390	66.0	50.0	500	30.00	12	132.0	-	500
11050R-7	390	218.0	50.0	500	110.00	12	436.0	-	500

(1) Due to low inertia and low electrical time constant characteristics, it is recommended that the system inertia be at least 0.02 seconds when using this motor for constant velocity applications.

ATEX/UKEX Approved PowerFlex 700S, Phase II Drives in Group II Category (2) Applications with ATEX/UKEX Approved Motors

General Information

This document provides information on operation of an ATEX/UKEX approved drive and ATEX/UKEX approved motor. The motor is located in a defined hazardous environment, while the drive is not. A protective system is required to stop current flow to the motor when an over temperature condition has been sensed in the motor. When sensed, the drive will go into a stop condition. To restart the drive, the over temperature condition must be resolved, followed by a valid start command to the drive. The PowerFlex® 700S Phase II drive must have the DriveGuard® Safe-Off with Second Encoder option board installed for ATEX/UKEX applications. Consult the option board User Manual for installation instructions if necessary.

The drive is manufactured under the guidelines of the ATEX directive 2014/34/EU and of the UK EX Regulations 2016 No. 1107. The Drives are in Group II Category (2) Applications with ATEX/UKEX Approved Motors. Certification of the drive for the ATEX/UKEX group and category on its nameplate requires installation, operation, and maintenance according to this document and to the requirements found in the User Manual and appropriate Motor Instruction Manual(s).

ATTENTION: Operation of this ATEX/UKEX certified drive with an ATEX/UKEX certified motor that is located in a hazardous environment requires additional installation, operation, and maintenance procedures beyond those stated in the standard User Manual. Equipment damage and/or personal injury may result if all additional instructions in this document are not observed.

Motor Requirements

- The motor must be manufactured under the guidelines of the ATEX directive 2014/34/EU and of the UK EX Regulations 2016 No. 1107. It must be installed, operated, and maintained per the motor manufacturer supplied instructions.
- Only motors with nameplates marked for use on an inverter power source, and labeled for specific hazardous areas, may be used in hazardous areas on inverter (variable frequency) power.
- When the motor is indicated for ATEX/UKEX Group II Category 2 for use in gas environments (Category 2G) the motor must be of flameproof construction, EEx d (according to EN50018) or Ex d (according to EN60079-1 or IEC60079-1). Group II motors are marked with a temperature or a temperature code.
- When the motor is indicated for ATEX/UKEX Group II Category 2 for use in dust environments (Category 2D) the motor must be protected by an enclosure (according to EN50281-1-1 or according to IEC61241-1: Ex tD). Group II motors are marked with a temperature.
- The motor over temperature signal supplied to the drive must be a normally clod contact (open during over temperature condition) compatible with the digital (logic) input circuitry of the drive. If multiple sensors are required in the motor, the connection at the drive must be the resultant of all required contacts wired in series.
- Refer to all product markings for additional cautions that may apply.
- Typical motor markings are contained on a motor certification nameplate similar to the sample below.

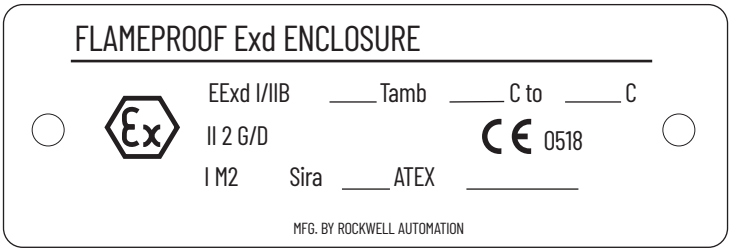

Drive Wiring

IMPORTANT	ATEX/UKEX certification of this drive requires that two separate inputs be configured to monitor a normally closed over temperature contact (or multiple contacts wired in series) presented to the drive from the motor.

The first input must energize “Digital Input6/Hardware Enable” on the drive control board (TB2, terminal 16). The second input must energize the relay coil on the DriveGuard® Safe-Off with Second Encoder option board (terminals 1 & 2 on the board). This option board must be installed in the drive for ATEX/UKEX applications. It is offered with a 24V DC coil only. Both input signals are wired with respect to the drive’s digital input common when using a control board with 24V I/O. Motor supplied contacts must have ratings compatible with the input circuit ratings and applied voltage level of the drive.

Safe-Off Terminal Descriptions

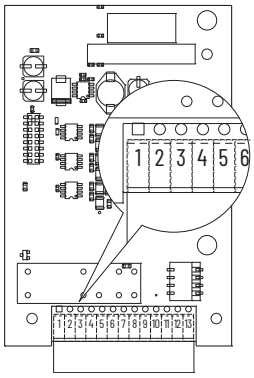

No.	Signal	Description
1	+24V DC	Connections for power to energize coil. 33.3 mA typical, 55 mA maximum.
2	24V Common	
3	Monitor - N.C.	Normally closed contacts for monitoring relay status. Maximum Resistive Load: 250V AC / 30V DC / 50 VA / 60 Watts Maximum Inductive Load: 250V AC / 30V DC / 25 VA / 30 Watts
4	Common - N.C.	

Wiring Example

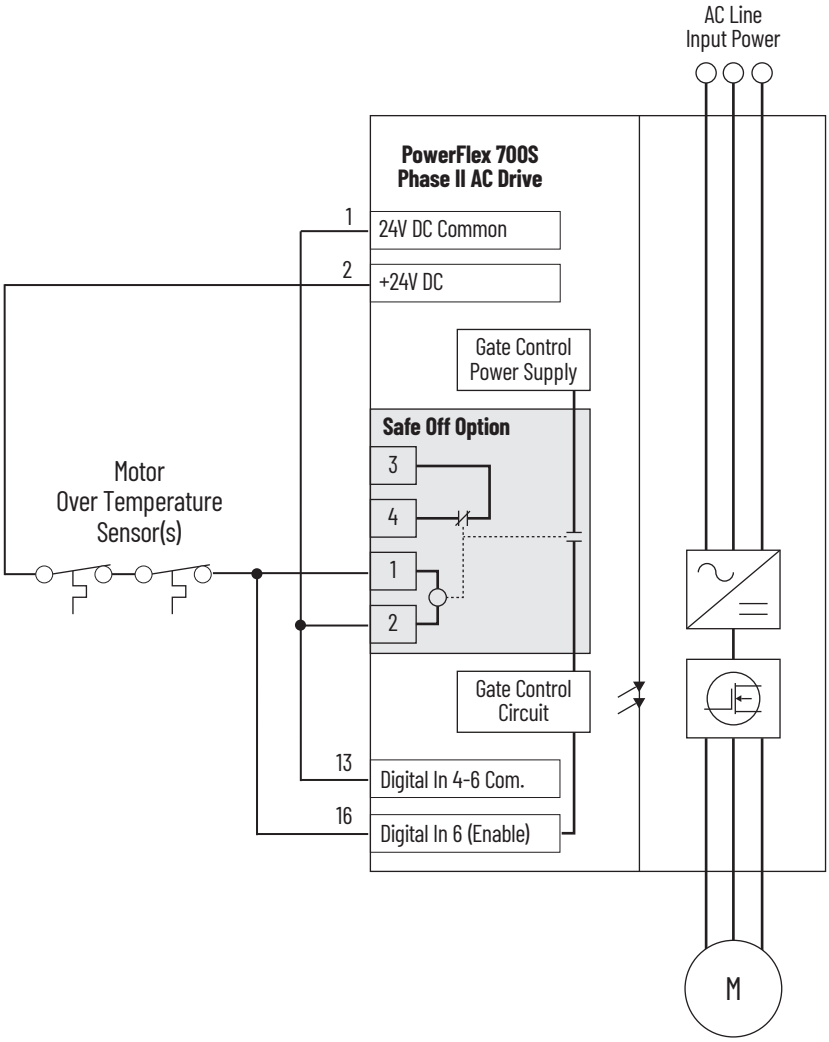

Drive Hardware Configuration

Digital Input 6 must be configured as a Hardware Enable. Ensure that Jumper P22 on the Main Control Board is set to HW Enable (Pins 2 and 4).`

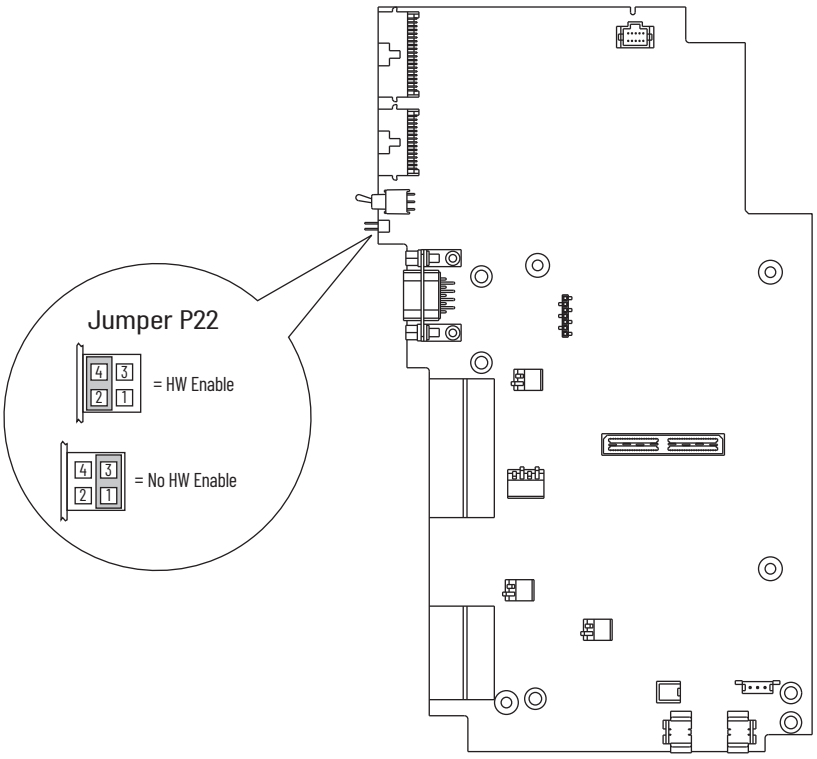

Operation Verification

At regular intervals during the life of the machine check the protective system for proper operation. Both channels shall be verified using the table below. How frequently the protective system is checked is dependent on the safety analysis of the machine section controlled by the drive.

Protective System Status	Drive In Safe State	Drive In Safe State	Drive In Safe State	Drive Able To Run
Channel Operation				
Safe-Off Option Terminals 1 & 2	No Power Applied	Power Applied	No Power Applied	Power Applied
PowerFlex 700S Phase II Enable Input	No Power Applied	No Power Applied	Power Applied	Power Applied
Description For Verification				
Safe-Off Option Monitor Contact Terminals 3 & 4	Closed	Open	Closed	Open
PowerFlex 700S Phase II Drive Inhibits Param. 156, Bits 1 & 16	Bit 16 = 1 Bit 1 = 1	Bit 16 = 0 Bit 1 = 1	Bit 16 = 1 Bit 1 = 0	Bit 16 = 0 Bit 1 = 0

Rockwell Automation Support

Use these resources to access support information.

Technical Support Center	Find help with how-to videos, FAQs, chat, user forums, Knowledgebase, and product notification updates.	rok.auto/support
Local Technical Support Phone Numbers	Locate the telephone number for your country.	rok.auto/phonesupport
Technical Documentation Center	Quickly access and download technical specifications, installation instructions, and user manuals.	rok.auto/techdocs
Literature Library	Find installation instructions, manuals, brochures, and technical data publications.	rok.auto/literature
Product Compatibility and Download Center (PCDC)	Download firmware, associated files (such as AOP, EDS, and DTM), and access product release notes.	rok.auto/pcdc

Documentation Feedback

Your comments help us serve your documentation needs better. If you have any suggestions on how to improve our content, complete the form at rok.auto/docfeedback.

Waste Electrical and Electronic Equipment (WEEE)

At the end of life, this equipment should be collected separately from any unsorted municipal waste.

Rockwell Automation maintains current product environmental compliance information on its website at rok.auto/pec.

Rockwell Otomasyon Ticaret A.Ş. Kar Plaza İş Merkezi E Blok Kat:6 34752, İçerenköy, İstanbul, Tel: +90 (216) 5698400 EEE Yönetmeliğine Uygundur

Connect with us.

rockwellautomation.com — expanding **human possibility**®

AMERICAS: Rockwell Automation, 1201 South Second Street, Milwaukee, WI 53204-2496 USA, Tel: (1) 414.382.2000, Fax: (1) 414.382.4444
EUROPE/MIDDLE EAST/AFRICA: Rockwell Automation NV, Pegasus Park, De Kleetlaan 12a, 1831 Diegem, Belgium, Tel: (32) 2 663 0600, Fax: (32) 2 663 0640
ASIA PACIFIC: Rockwell Automation, Level 14, Core F, Cyberport 3, 100 Cyberport Road, Hong Kong, Tel: (852) 2887 4788, Fax: (852) 2508 1846
UNITED KINGDOM: Rockwell Automation Ltd. Pitfield, Kiln Farm Milton Keynes, MK11 3DR, United Kingdom, Tel: (44)(1908) 838-800, Fax: (44)(1908) 261-917

Publication 20D-PM001E-EN-P - October 2022
Supersedes Publication 20D-PM001D-EN-P - March 2019