Product Information

Original Instructions

Allen-Bradley by ROCKWELL AUTOMATION

PowerFlex 755TM IP00 Open Type Kits and UL Listed Accessories

Catalog Numbers 20-750-DCVBB-400, 20-750-DCVBB-400C, 20-750-DCVBB-400C-FBR, 20-750-DCVBB-400-FBR, 20-750-DCVBB-800, 20-750-DCVBB-800-FBR, 20-750-DCVBB-BS, 20-750-DCVBB-SPLICE, 20-750-MACBUS10-*nKn*, 20-750-MACBUS*n-nKn*, 20-750-MACINP-F7, 20-750-MACIOT-F7M, 20-750-MACL*n*-F*n*M, 20-750-MACPC1-*xx*, 20-750-MACPR-*xx*-F1*n*M, 20-750-MACR*n*-F*n*M, 20-750-MACSPL*n*-F1*n*M, 20-750-MACSPL2-*nKn*, 20-750-MACSPL*n*-F*n*M, 20-750-MADR*n*-F8M, 20-750-MBSCD-DB, 20-750-MCBBUS*n-nKn*, 20-750-MCBUS1-*xx*-F*n*M, 20-750-MCBUS1-*xx*-F10M, 20-750-MCNCTAC-F*n*, 20-750-MCTRLBUS-CONN*n*, 20-750-MCTRLBUS-SPL, 20-750-MDCBUS10-*nKn*, 20-750-MDCBUS1-COND, 20-750-MDCBUS*n-nKn*, 20-750-MDCBUS-COND, 20-750-MDCFB-*xx*-F7M, 20-750-MDCOT-F7M, 20-750-MDCREC1-F8M, 20-750-MDCREC1-F8MC, 20-750-MDCSPL1-*nKn*, 20-750-MEMCC2-F10, 20-750-MEMCC2-F*n*, 20-750-MEMCC2-F8910, 20-750-MFTB1-F8, 20-750-MGNDSPL1, 20-750-MIR*n*-F10M, 20-750-MIR*n*-F*n*M, 20-750-MLBRKT-F8M, 20-750-MNIH*n*, 20-750-MNIR*n*, 20-750-MNIH-JMP*n*, 20-750-MN-WBAY*n-nnn*, 20-750-MN-XMFR2-*x*, 20-750-MN-XMFR*n-xx*, 20-750-MOSHPD-F1*n*M, 20-750-MOSHPD-F*n*M, 20-750-MPCCB-F7M, 20-750-MREC1-F8M, 20-750-MREC1-F8MC, 20-750-MSOF-F7, 20-750-MTAM1-*xx*, 20-750-MTEBUS*n-nKn*, 20-750-MTESPL*n*-F8M, 20-750-MTESPL*n*-F1*n*M, 20-750-MVENT*n*-F*n*M, 20-750-MVENT2-F10M, 20-750-MVENTC2-F11M, 20-750-MVENTC2-F8M, SK-RM-GRNDCLMP-*nn*, SK-RM-GRNDCLMP-185

ATTENTION: Read this document and the documents listed in the Additional Resources section about installation, configuration and operation of this equipment before you install, configure, operate or maintain this product. Users are required to familiarize themselves with installation and wiring instructions in addition to requirements of all applicable codes, laws, and standards.

Activities including installation, adjustments, putting into service, use, assembly, disassembly, and maintenance are required to be carried out by suitably trained personnel in accordance with applicable code of practice. If this equipment is used in a manner not specified by the manufacturer, the protection provided by the equipment may be impaired.

注意：在安装、配置、操作和维护本产品前，请阅读本文档以及 “其他资源” 部分列出的有关设备安装、配置和操作的相应文档。除了所有适用规范、法律和标准的相关要求之外，用户还必须熟悉安装和接线说明。

安装、调整、投运、使用、组装、拆卸和维护等各项操作必须由经过适当训练的专业人员按照适用的操作规范实施。

如果未按照制造商指定的方式使用该设备，则可能会损害设备提供的保护。

ATENCIÓN: Antes de instalar, configurar, poner en funcionamiento o realizar el mantenimiento de este producto, lea este documento y los documentos listados en la sección Recursos adicionales acerca de la instalación, configuración y operación de este equipo. Los usuarios deben familiarizarse con las instrucciones de instalación y cableado y con los requisitos de todos los códigos, leyes y estándares vigentes.

El personal debidamente capacitado debe realizar las actividades relacionadas a la instalación, ajustes, puesta en servicio, uso, ensamblaje, desensamblaje y mantenimiento de conformidad con el código de práctica aplicable. Si este equipo se usa de una manera no especificada por el fabricante, la protección provista por el equipo puede resultar afectada.

ATENÇÃO: Leia este e os demais documentos sobre instalação, configuração e operação do equipamento que estão na seção Recursos adicionais antes de instalar, configurar, operar ou manter este produto. Os usuários devem se familiarizar com as instruções de instalação e fiação além das especificações para todos os códigos, leis e normas aplicáveis.

É necessário que as atividades, incluindo instalação, ajustes, colocação em serviço, utilização, montagem, desmontagem e manutenção sejam realizadas por pessoal qualificado e especializado, de acordo com o código de prática aplicável.

Caso este equipamento seja utilizado de maneira não estabelecida pelo fabricante, a proteção fornecida pelo equipamento pode ficar prejudicada.

ВНИМАНИЕ: Перед тем как устанавливать, настраивать, эксплуатировать или обслуживать данное оборудование, прочитайте этот документ и документы, перечисленные в разделе «Дополнительные ресурсы». В этих документах изложены сведения об установке, настройке и эксплуатации данного оборудования. Пользователи обязаны ознакомиться с инструкциями по установке и прокладке соединений, а также с требованиями всех применимых норм, законов и стандартов.

Все действия, включая установку, наладку, ввод в эксплуатацию, использование, сборку, разборку и техническое обслуживание, должны выполняться обученным персоналом в соответствии с применимыми нормами и правилами.

Если оборудование используется не предусмотренным производителем образом, защита оборудования может быть нарушена.

注意 : 本製品を設置、構成、稼動または保守する前に、本書および本機器の設置、設定、操作についての参考資料の該当箇所に記載されている文書に目を通してください。ユーザは、すべての該当する条例、法律、規格の要件に加えて、設置および配線の手順に習熟している必要があります。

設置調整、運転の開始、使用、組立て、解体、保守を含む諸作業は、該当する実施規則に従って訓練を受けた適切な作業員が実行する必要があります。

本機器が製造メーカにより指定されていない方法で使用されている場合、機器により提供されている保護が損なわれる恐れがあります。

ACHTUNG: Lesen Sie dieses Dokument und die im Abschnitt „Weitere Informationen"aufgeführten Dokumente, die Informationen zu Installation, Konfiguration und Bedienung dieses Produkts enthalten, bevor Sie dieses Produkt installieren, konfigurieren, bedienen oder warten. Anwender müssen sich neben den Bestimmungen aller anwendbaren Vorschriften, Gesetze und Normen zusätzlich mit den Installations- und Verdrahtungsanweisungen vertraut machen.

Arbeiten im Rahmen der Installation, Anpassung, Inbetriebnahme, Verwendung, Montage, Demontage oder Instandhaltung dürfen nur durch ausreichend geschulte Mitarbeiter und in Übereinstimmung mit den anwendbaren Ausführungsvorschriften vorgenommen werden.

Wenn das Gerät in einer Weise verwendet wird, die vom Hersteller nicht vorgesehen ist, kann die Schutzfunktion beeinträchtigt sein.

ATTENTION : Lisez ce document et les documents listés dans la section Ressources complémentaires relatifs à l'installation, la configuration et le fonctionnement de cet équipement avant d'installer, configurer, utiliser ou entretenir ce produit. Les utilisateurs doivent se familiariser avec les instructions d'installation et de câblage en plus des exigences relatives aux codes, lois et normes en vigueur.

Les activités relatives à l'installation, le réglage, la mise en service, l'utilisation, l'assemblage, le démontage et l'entretien doivent être réalisées par des personnes formées selon le code de pratique en vigueur.

Si cet équipement est utilisé d'une façon qui n'a pas été définie par le fabricant, la protection fournie par l'équipement peut être compromise.

주의: 본 제품 설치, 설정, 작동 또는 유지 보수하기 전에 본 문서를 포함하여 설치, 설정 및 작동에 관한 참고 자료 섹션의 문서들을 반드시 읽고 숙지하십시오. 사용자는 모든 관련 규정, 법규 및 표준에서 요구하는 사항에 대해 반드시 설치 및 배선 지침을 숙지해야 합니다 .

설치 , 조정 , 가동 , 사용 , 조립 , 분해 , 유지보수 등 모든 작업은 관련 규정에 따라 적절한 교육을 받은 사용자를 통해서만 수행해야 합니다 .

본 장비를 제조사가 명시하지 않은 방법으로 사용하면 장비의 보호 기능이 손상될 수 있습니다 .

ATTENZIONE Prima di installare, configurare ed utilizzare il prodotto, o effettuare interventi di manutenzione su di esso, leggere il presente documento ed i documenti elencati nella sezione "Altre risorse", riguardanti l'installazione, la configurazione ed il funzionamento dell'apparecchiatura. Gli utenti devono leggere e comprendere le istruzioni di installazione e cablaggio, oltre ai requisiti previsti dalle leggi, codici e standard applicabili.

Le attività come installazione, regolazioni, utilizzo, assemblaggio, disassemblaggio e manutenzione devono essere svolte da personale adeguatamente addestrato, nel rispetto delle procedure previste.

Qualora l'apparecchio venga utilizzato con modalità diverse da quanto previsto dal produttore, la sua funzione di protezione potrebbe venire compromessa.

DİKKAT: Bu ürünün kurulumu, yapılandırılması, işletilmesi veya bakımı öncesinde bu dokümanı ve bu ekipmanın kurulumu, yapılandırılması ve işletimi ile ilgili İlave Kaynaklar bölümünde yer listelenmiş dokümanları okuyun. Kullanıcılar yürürlükteki tüm yönetmelikler, yasalar ve standartların gereksinimlerine ek olarak kurulum ve kablolama talimatlarını da öğrenmek zorundadır.

Kurulum, ayarlama, hizmete alma, kullanma, parçaları birleştirme, parçaları sökme ve bakım gibi aktiviteler sadece uygun eğitimleri almış kişiler tarafından yürürlükteki uygulama yönetmeliklerine uygun şekilde yapılabilir.

Bu ekipman üretici tarafından belirlenmiş amacın dışında kullanılırsa, ekipman tarafından sağlanan koruma bozulabilir.

注意事項：在安裝、設定、操作或維護本產品前，請先閱讀此文件以及列於 「其他資源」章節中有關安裝、設定與操作此設備的文件。使用者必須熟悉安裝和配線指示，並符合所有法規、法律和標準要求。

包括安裝、調整、交付使用、使用、組裝、拆卸和維護等動作都必須交由已經過適當訓練的人員進行，以符合適用的實作法規。

如果將設備用於非製造商指定的用途時，可能會造成設備所提供的保護功能受損。

POZOR: Než začnete instalovat, konfigurovat či provozovat tento výrobek nebo provádět jeho údržbu, přečtěte si tento dokument a dokumenty uvedené v části Dodatečné zdroje ohledně instalace, konfigurace a provozu tohoto zařízení. Uživatelé se musejí vedle požadavků všech relevantních vyhlášek, zákonů a norem nutně seznámit také s pokyny pro instalaci a elektrické zapojení.

Činnosti zahrnující instalaci, nastavení, uvedení do provozu, užívání, montáž, demontáž a údržbu musí vykonávat vhodně proškolený personál v souladu s příslušnými prováděcími předpisy.

Pokud se toto zařízení používá způsobem neodpovídajícím specifikaci výrobce, může být narušena ochrana, kterou toto zařízení poskytuje.

UWAGA: Przed instalacją, konfiguracją, użytkowaniem lub konserwacją tego produktu należy przeczytać niniejszy dokument oraz wszystkie dokumenty wymienione w sekcji Dodatkowe źródła omawiające instalację, konfigurację i procedury użytkowania tego urządzenia. Użytkownicy mają obowiązek zapoznać się z instrukcjami dotyczącymi instalacji oraz oprzewodowania, jak również z obowiązującymi kodeksami, prawem i normami.

Działania obejmujące instalację, regulację, przekazanie do użytkowania, użytkowanie, montaż, demontaż oraz konserwację muszą być wykonywane przez odpowiednio przeszkolony personel zgodnie z obowiązującym kodeksem postępowania.

Jeśli urządzenie jest użytkowane w sposób inny niż określony przez producenta, zabezpieczenie zapewniane przez urządzenie może zostać ograniczone.

OBS! Läs detta dokument samt dokumentet, som står listat i avsnittet Övriga resurser, om installation, konfigurering och drift av denna utrustning innan du installerar, konfigurerar eller börjar använda eller utföra underhållsarbete på produkten. Användare måste bekanta sig med instruktioner för installation och kabeldragning, förutom krav enligt gällande koder, lagar och standarder.

Åtgärder som installation, justering, service, användning, montering, demontering och underhållsarbete måste utföras av personal med lämplig utbildning enligt lämpligt bruk.

Om denna utrustning används på ett sätt som inte anges av tillverkaren kan det hända att utrustningens skyddsanordningar försätts ur funktion.

LET OP: Lees dit document en de documenten die genoemd worden in de paragraaf Aanvullende informatie over de installatie, configuratie en bediening van deze apparatuur voordat u dit product installeert, configureert, bediend of onderhoudt. Gebruikers moeten zich vertrouwd maken met de installatie en de bedradingsinstructies, naast de vereisten van alle toepasselijke regels, wetten en normen.

Activiteiten zoals het installeren, afstellen, in gebruik stellen, gebruiken, monteren, demonteren en het uitvoeren van onderhoud mogen uitsluitend worden uitgevoerd door hiervoor opgeleid personeel en in overeenstemming met de geldende praktijkregels.

Indien de apparatuur wordt gebruikt op een wijze die niet is gespecificeerd door de fabrikant, dan bestaat het gevaar dat de beveiliging van de apparatuur niet goed werkt.

Summary of Changes

This publication contains the following new or updated information. This list includes substantive updates only and is not intended to reflect all changes.

Topic	Page
Updated the Additional Resources table to include the new PowerFlex® 755TM Non-Regenerative Supply (NRS) publication.	2
Added the Power Module Density section.	2
Updated the Corrosive Atmosphere specification in the Environmental Specifications table.	2
Added the new control transformer kit to the IP00 Kit Temperature Specifications table.	3
Added the new UL Listed Accessories table.	3
Updated the DC Bus Conditioner connections table for NRS connections.	6
Add the DC Bus Conditioner Connection Diagram (NRS).	6
Updated the Control Bus Assembly Ratings table for the NRS.	8
Updated the Control Bus Splice Ratings table for the NRS.	8
Updated the Control Bus Connector Ratings table for the NRS.	8
Updated the 20-750-MCTRLBUS-CONN1 connector table descriptions for the NRS.	9

Topic (continued)	Page
Added the Control Transformer with Fuse Holders and Fuses section.	10
Added the Non-Regenerative Supply Thermal Switch Interconnect Harness Kits section.	10
Added the new Wire Entry Bay Kits section.	11
Updated the DC Voltage Balance Bay (Back-to-Back Configuration) DC Bus Splice Kit table for the NRS.	14
Updated the AC Bus Bar Assemblies (Frames 8...15) table for the NRS.	15
Updated the DC Bus Bar Assemblies (Frames 8...15, NRS) table for the NRS.	17
Updated the Stab Receptacle Assemblies and Stab Receptacles with Back Panel and Bus Bars table for the NRS.	17
Add the contents for the movable L-bracket kit (catalog number 20-750-MLBRKT-F8M).	19
Updated the Bus Bar and Back Panel and Stab Receptacle Assembly Kits Suitable for Power Connections table for the NRS.	19
Updated the Approximate Weights table for the NRS.	20

Additional Resources

These documents contain additional information concerning related products from Rockwell Automation.

Resource	Description
PowerFlex® 755TM IP00 Open Type Kits Technical Data, publication 750-TD101 PowerFlex 750-Series Products with TotalFORCE™ Control Technical Data, publication 750-TD100	Provides detailed information on: • Kit selection • Kit ratings and specifications • Option specifications
PowerFlex 750-Series Products with TotalFORCE Control Installation Instructions, publication 750-IN100	Provides the basic steps to install PowerFlex 755TL drives, PowerFlex 755TR drives, and PowerFlex 755TM bus supplies.
PowerFlex 755TM IP00 Open Type Kits Installation Instructions, publication 750-IN101	Provides instructions to install IP00 Open Type kits in user-supplied enclosures.
PowerFlex 755TM IP00 EMC C2 Filter Unpacking and Lifting Instructions, publication 750-IN109	Provides unpacking and lifting instructions for the IP00 / Open Type EMC C2 filter.
PowerFlex 750-Series Products with TotalFORCE Control Hardware Service Manual, publication 750-TG100	Provides detailed information on: • Preventive maintenance • Component testing • Hardware replacement procedures
PowerFlex 755TM Non-Regenerative Supply User Manual, publication 750-UM100	Provides detailed information on: • Receiving, handling, and storage • Installation steps • Setup and commissioning • Basic troubleshooting and maintenance
Wiring and Grounding Guidelines for Pulse Width Modulated (PWM) AC Drives, publication DRIVES-IN001	Provides basic information to properly wire and ground PWM AC drives.
Industry Installation Guidelines for PWM AC Drives Application Technique, publication DRIVES-AT003	Provides basic information on enclosure systems, considerations to help protect against environmental contaminants, and power and grounding considerations for installing Pulse Width Modulated (PWM) AC drives.
Drives in Common Bus Configurations with PowerFlex 755TM Bus Supplies Application Techniques, publication DRIVES-AT005	Provides basic information to properly wire and ground the following products in common bus applications: • PowerFlex 755TM drive system for common bus solutions • PowerFlex 750-Series AC and DC input drives
Product Certifications website, rok.auto/certifications	Provides declarations of conformity, certificates, and other certification details.

You can view or download publications at rok.auto/literature.

Qualified Personnel

ATTENTION: Only qualified personnel familiar with adjustable frequency AC drives and associated machinery should plan or implement the installation, start up, and subsequent maintenance of the system. Failure to comply can result in personal injury and/or equipment damage.

Accessible Parts

ATTENTION: To avoid an electric shock hazard, the installer must provide guarding to shield exposed electrical equipment against accidental contact. Exposed electrical components that carry potentially hazardous voltages are identified in the PowerFlex 750-Series Product with TotalFORCE Control Hardware Service Manual, publication 750-TG100. When installing this equipment, consider the design and placement of guarding to help prevent personal injury or equipment damage.

Product Safety

ATTENTION: Incorrectly applied or installed accessories can result in component damage or a reduction in product life. Wiring or application errors such as under sizing the motor, incorrect or inadequate AC supply, or excessive surrounding-air temperatures can result in malfunction of the system.

ATTENTION: This drive contains electrostatic discharge (ESD) sensitive parts and assemblies. Static control precautions are required when you install, test, service, or repair this assembly. Component damage may result if ESD control procedures are not followed. If you are not familiar with static control procedures, reference Guarding Against Electrostatic Damage, publication 8000-4.5.2 or any other applicable ESD protection handbook.

Equivalent Frame Size

PowerFlex 755T products are assigned frame size designators. The designations represent the various configurations of IP00 kits and hardware components that are packaged in a specific manner to obtain the full range of product offerings and power ratings. For an explanation of how frame sizes are determined for your product, see PowerFlex 755TM IP00 Open Type Kits Installation Instructions, publication 750-IN101.

Power Module Density

PowerFlex 755TM Non-Regenerative Supply (NRS) modules are assigned single density (1X) or dual density (2X) designators. "Single density" and "dual density" refers to the power output capability of the available NRS modules. Dual density modules support twice the power output of a single density module and standard PowerFlex 755TM power module with the same physical module size. See the PowerFlex 755TM Non-Regenerative Supply User Manual, 750-UM100, for details.

Environmental Specifications

This section describes environmental specifications. For complete product specifications and derating guidelines, see the PowerFlex 755TM IP00 Open Type Kits Technical Data, publication 750-TD101.

Category	Specification
Relative humidity	5...95% non-condensing
Storage temperature	-40...+70 °C (-40...+158 °F)
Pollution degree	Accessory kits are designed to meet Pollution Degree 2 per UL61800-5-1.
Corrosive Atmosphere • ASTM B845-97 Method K Accelerated Test (30-day exposure) • Rockwell Automation proprietary accelerated corrosion test for industries with sources of gaseous sulfur compounds, including tire and rubber	Severity Level GX per ANSI/ISA 71.03-2013, Airborne contaminants-gases. Severity level GX is defined as up to 2100 angstroms of film growth per 30 days of copper or silver reactivity. Severity Level CX per IEC 60721-3-3: 2019, Chemically Active Substances. For the product to meet the corrosive atmosphere rating, these conditions must be met: • Protective covers must remain installed in unused connectors during storage and operation. • The product or kit must be stored in the original packaging.

IP00 Open Type Kits with XT Designation

All PowerFlex 755TM IP00 Open Type kits with corrosive gas protection (XT) meet the corrosive atmosphere specification as defined by Rockwell Automation (see Corrosive Atmosphere in the Environmental Specifications section on page 2).

The IP00 Open Type kits that are listed in this table do not meet the corrosive atmosphere specification. Do not install these kits in a PowerFlex 755T product installed in a corrosive environment. The kit catalog number and series are contained on the kit package label and/or nameplate.

Cat. No.	Module	Series
20-750-MACPC1-*xx* or 20-750-MACPC1-*xx*-F7M	AC precharge control board	A
20-750-MFTB1-F8	Fiber transceiver board	
20-750-MDCBUS-COND	DC bus conditioner (frames 8...15)	
20-750-MDCBUS1-COND	DC bus conditioner (frames 8...12, marine)	
20-750-MDCBUS-COND-F7M	DC bus conditioner (frame 7)	
20-750-MBSCD-DB	Marine discharge board (frame 7)	
20-750-MEMCC2-F8910	EMC C2 Filter, IP00, Frame 8...10	
20-750-MVENTC1-F11M	Input bay vent kit	
20-750-MTAM1-*xx*	Torque accuracy module	B and earlier

IMPORTANT For IP00 Open Type kits installed in an environment that contains volatile, conductive, or corrosive liquid, gases, and/or solids these conditions must be met:

- Kits must be installed in enclosures that provide for protection against solid and liquid ingress (IP21 / Type 1 or IP54 / Type 12)
- Kits must have corrosive gas protection (XT)
- Protective covers must be installed on unused connections

For IP00 Open Type kits that are stored before installation these conditions must be met:

- Kits must remain in the original packaging until the time of installation
- Kits must be stored in an area where exposure to corrosive atmosphere and humidity is minimized
- Kits must not be stored in environments that contain conductive pollutants

See the Industry Installation Guidelines for Pulse Width Modulated (PWM) AC Drives, publication DRIVES-AT003 for more information on environmental considerations.

IP00 Kit Temperature Specifications

This table provides the maximum surrounding air temperature specifications for the applicable IP00 kits. All kits that are listed in this table must be installed in a user-supplied, appropriately rated enclosure. Installation guidelines and procedures for IP00 / Open Type kits are in the PowerFlex 755TM IP00 Open Type Kits Installation Instructions, publication 750-IN101.

Cat. No.	Accessory	Maximum Surrounding Temperature *°C (°F)*
20-750-MACPC1-*xx* or 20-750-MACPC1-*xx*-F7M	AC precharge control board	65 (149)
20-750-MACPR-*xx*-F*nn*M or 20-750-MACPR-*xx*-F7M	AC precharge resistor bank	75 (167)
20-750-MACP-*xx*-TVSS	AC precharge TVSS module	65 (149)
20-750-MN-XMFR*n*-*xx*, 20-750-MN-XMFR2-*x*	Control transformer, fuse holders, and fuses	70 (158)
20-750-MFTB1-F8	Fiber transceiver board	65 (149)
20-750-MDCBUS-COND	DC bus conditioner (frames 8...15)	75 (167)
20-750-MDCBUS1-COND	DC bus conditioner (frames 8...12, marine)	75 (167)
20-750-MDCBUS-COND-F7M	DC bus conditioner (frame 7)	75 (167)
20-750-MEMCC2-F8910	EMC C2 Filter, IP00, Frame 8...10	50 (122)(1)
20-750-MTAM1-*xx*	Torque accuracy module	65 (149)

(1) 40 ° C (104 ° F) max. ambient temp when installed in the 800 mm wide option bay (cat. no. 20-750-MPBAY-800).

UL Listed Accessories

This section lists the IP00 Open Type kits contained in this publication that are UL listed. All other IP00 Open Type kits listed in this publication are not UL listed. For details about how to install the accessories included in this publication, see the PowerFlex 755TM IP00 Open Type Kits Installation Instructions, publication 750-IN101.

Cat. No.	Description
20-750-MACPC1-*xx* and 20-750-MACPC1-*xx*-F7M	AC precharge control board
20-750-MACPR-*xx*-F*nn*M and 20-750-MACPR-*xx*-F7M	AC precharge resistor bank
20-750-MACP-*xx*-TVSS	AC precharge TVSS module
20-750-MDCBUS-COND, 20-750-MDCBUS1-COND, and 20-750-MDCBUS-COND-F7M	DC bus conditioner
20-750-MBSCD-DB	Marine discharge circuit board
20-750-MTAM1-*xx*	Torque accuracy module
20-750-MFTB1-F8.	Fiber transceiver circuit board
20-750-MCBUS1-*xx*-F*n*M and 20-750-MCBUS1-*xx*-F10M	Control bus assembly
20-750-MCTRLBUS-SPL	Control bus splice
20-750-MCTRLBUS-CONN*n*	Control bus connectors
20-750-MN-XMFR*n*-*xx*	Control transformers, fuse holders, and fuses
20-750-MACBUS6-*nKn*, 20-750-MACBUS8-*nKn*, 20-750-MACBUS*nn*-*nKn*, 20-750-MCNCTAC-F*n*, 20-750-MTEBUS*n*-*nKn*, 20-750-MACIOT-F7M, 20-750-MACINP-F7, 20-750-MSOF-F7	AC input/output bus bars
20-750-MACL*n*-F*n*M, 20-750-MACL2-*xx*-F7M, 20-750-MACL2-*xx*-F7M	AC input/output link bus bar and fuse assembly
20-750-MCBBUS*n*-*nKn*, 20-750-MPCCB-F7M	AC precharge circuit breaker bus bars
20-750-MDCFB-*xx*-F7M	DC output flex bus bar and fuse assembly
20-750-MACSPL1-F*nn*M, 20-750-MACSPL*n*-F*n*M, 20-750-MACSPL2-*nKn*, 20-750-MTESPL*n*-F*n*M	AC bus bar splices
20-750-MDCBUS*n*-*nKn*, 20-750-MDCBUS*nn*-*nKn*, 20-750-MDCOT-F7M, 20-750-MDRFB-F7M,	DC input/output bus bars
20-750-MDCSPL1-*nKn*, 20-750-DCVBB-SPLICE	DC bus splices
20-750-MGNDSPL1	Ground bus splice
20-750-DCVBB-400, 20-750-DCVBB-400C, 20-750-DCVBB-400-FBR, 20-750-DCVBB-800, 20-750-DCVBB-800-FBR, 20-750-DCVBB-BS	DC voltage balance / wire bays (back-to-back configurations)
20-750-MLBRKT-F8M	Input/output power cable L bracket
20-750-MNIH*n*, 20-750-MNIH-JMP*n*	Interconnect wire harness and interconnect jumper
20-750-MACR*n*-F*n*M, 20-750-MADR*n*-F*n*M, 20-750-MDCREC1-F8M, 20-750-MDCREC1-F8MC, 20-750-MREC1-F8M, 20-750-MREC1-F8MC, 20-750-MIR*n*-F*n*M, 20-750-MIR*n*-F*nn*M, 20-750-MNIR*n*	Stab receptacle assemblies and stab receptacle assemblies with back panel and bus bars
20-750-MVENT*n*-F*n*M, 20-750-MVENT*n*-F*nn*M, 20-750-MVENTC2-F8M, and 20-750-MVENTC2-F11M	Ventilation kits (that contain fans)
20-750-MEMCC2-F8910, 20-750-MEMCC2-IPBB, 20-750-MEMCC2-F*n*, 20-750-MEMCC2-F10	EMC C2 filter
20-750-MOSHPD-F*n*M, 20-750-MOSHPD-F*nn*M	Seismic-qualified installation kits

AC Precharge Control Board

The AC precharge control board is installed, with all interconnection wire harnesses, in the frame 8 and 9 AC precharge modules (cat. no. 20-750-MACP-CD-F8M, 20-750-MACP-x-F8M, 20-750-MACP-CD-F9M, 20-750-MACP-x-F9M). For frames 7 and 10...15, the AC precharge control circuit board kit excludes the wire harnesses and fiber-optic cable that are required for connections to other IP00 kits and components that are used in an AC precharge circuit and must be customer-sourced. See the PowerFlex 755TM IP00 Open Type Kits Installation Instructions, publication 750-IN101, for details.

IMPORTANT Do not remove protective covers from wire harnesses, circuit board connectors, terminal blocks, and fiber-optic ports unless used at the time of installation. Removing a protective cover can lead to contamination.

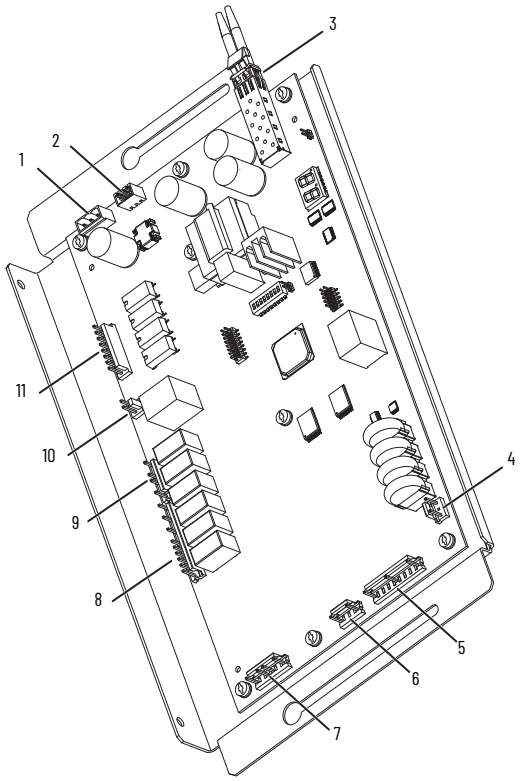

Protective connection covers not shown for clarity only.

No.	Name	Description
1	J1	Required, internal 24V DC, 1.5 A power supply from connector P2
2	J12	Optional 24V DC, 1.5 A power supply
3	ACP	Fiber transceiver port for fiber-optic connection ACP0 on the fiber transceiver board in the control pod
4	J8	Chassis MOV jumper (PE-A)
5	J6	R, S, and T signals from fused disconnect (FD1)
6	J7	DC bus feedback signals
7	J5	Customer-supplied 240V AC, 1.2 A power source
8	J4	240V AC power to motor operator and circuit breaker close, shunt release, and AC precharge coils
9	J3	240V AC power to circuit breaker trip release and time delay relay
10	J11	TVSS module status from connector P15
11	J2	Status signals from the circuit breaker, fused disconnect, and AC precharge contactor

AC Precharge Control Board Ratings

Cat. No.	Rated Voltage	Frame
20-750-MACPC1-CD-F7M	400/480	7
20-750-MACPC1-EF-F7M	600/690	7
20-750-MACPC1-CD	400/480	8...15
20-750-MACPC1-EF	600/690	8...15

Fiber Transceiver Board

The fiber transceiver boards are installed on the fiber interface board in the control pod and contain the fiber-optic connections described here. See the PowerFlex 755TM IP00 Open Type Kits Installation Instructions, publication 750-IN101, for installation instructions.

IMPORTANT Do not remove protective covers from wire harnesses, circuit board connectors, terminal blocks, and fiber-optic ports unless used at the time of installation. Removing a protective cover can lead to contamination.

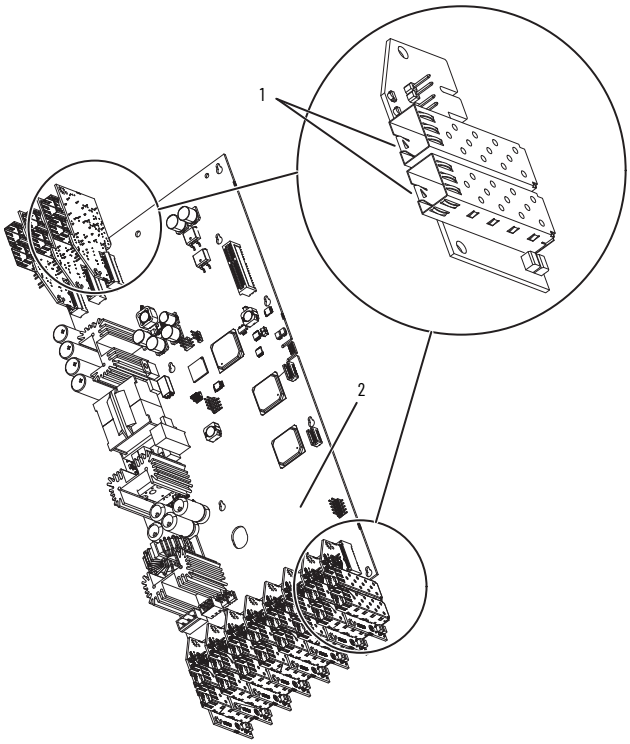

Protective connection covers not shown for clarity only.

No.	Frame 7 Name	Frame 8...15 Name	Description
1	ACPC	ACP0	Fiber transceiver port for fiber-optic connection with AC precharge control board
	TAM	ACP1 / TAM	Fiber transceiver port for fiber-optic connection with torque accuracy module
	L0	L0...L9	Fiber transceiver port for fiber-optic connection with power modules used as line side converters
	M0	M0...M9	Fiber transceiver port for fiber-optic connection with power modules used as motor side inverters
2	—	—	Fiber interface board

Fiber Transceiver Board Ratings

Catalog Number	Voltage
20-750-MFTB1-F8	400/480/600/690

ATTENTION: A hazard of permanent eye damage exists when using optical transmission equipment. This product emits intense light and invisible radiation. Do not look into module ports or fiber-optic cable connectors.

To install the fiber-optic connector, remove the transceiver cartridge from the cage, insert the fiber-optic cable into the transceiver, and insert the transceiver and fiber-optic cable into the cage until you hear a audible 'click.'

IMPORTANT Minimum inside bend radius for fiber-optic cable is 50 mm (2 in.). Any bends with a shorter inside radius can permanently damage the fiber-optic cable. Signal attenuation increases as inside bend radius is decreased.

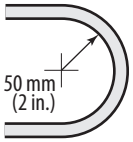

AC Precharge Resistor Bank (Frames 10...15)

The AC precharge resistor bank contains the following connections. See Resistor Bank Mounting Instructions (Frames 10...15) on page 20 for mounting instructions.

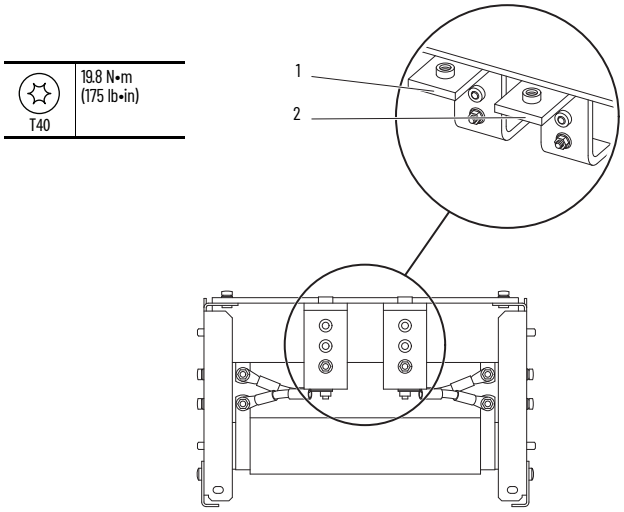

No.	Name	Description	Recommended Conductor Cross Section		Terminal Specification *mm (in.)*
			ISO (mm^2)	AWG	
1	Left terminal	Resistor bank terminal R1-1 to motor contactor terminal L1 Resistor bank terminal R2-1 to motor contactor terminal L2 Resistor bank terminal R3-1 to motor contactor terminal L3	42.4	1	Pad Area: 38.1 (1.5) x 50 (2)
2	Right terminal	Resistor bank terminal R1-2 to circuit breaker output terminal R/L1 Resistor bank terminal R2-2 to circuit breaker output terminal S/L2 Resistor bank terminal R3-2 to circuit breaker output terminal T/L3	42.4	1	

AC Precharge Resistor Bank Ratings (Frames 10...15)

Cat. No.	Resistance *(Ohms)*	Frame
20-750-MACPR-CD-F10M	0.83	10, 13
20-750-MACPR-CD-F11M	0.2	11, 14
20-750-MACPR-CD-F12M	0.16	12, 15
20-750-MACPR-EF-F10M	1.5	10, 13
20-750-MACPR-EF-F11M	0.37	11, 14
20-750-MACPR-EF-F12M	0.3	12, 15

AC Precharge Resistor Bank (Frame 10...15) Connection Diagram

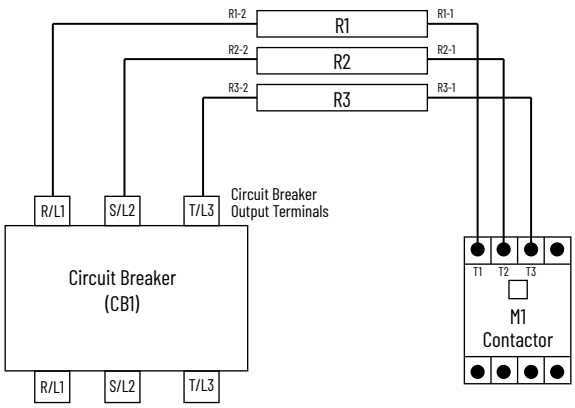

AC Precharge Resistor Bank (Frame 7)

The AC precharge resistor bank contains the following connections. See Resistor Bank Mounting Instructions (Frame 7) on page 20 for installation instructions.The mounting panel, wire harnesses, and other components shown here are not included in the kit and must be customer-supplied.

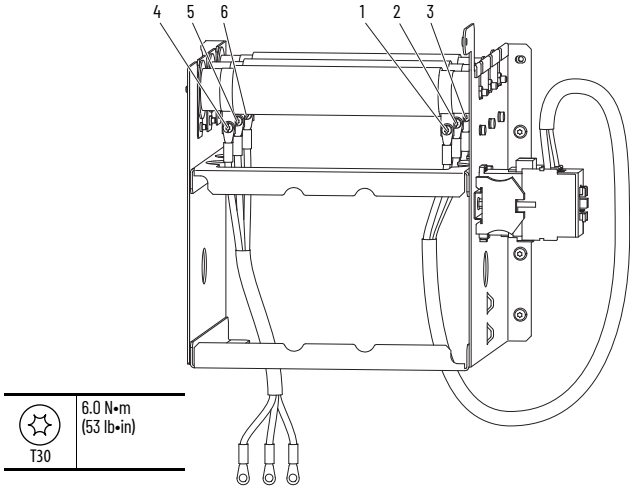

No.	Connection	Description	Recommended Conductor Cross Section	
			ISO (mm^2)	AWG
1	R1-1	Resistor bank terminal R1-1 to precharge contactor terminal L1	8.36	8
2	R2-1	Resistor bank terminal R2-1 to precharge contactor terminal L2		
3	R3-1	Resistor bank terminal R3-1 to precharge contactor terminal L3		
4	R1-2	Resistor bank terminal R1-2 to circuit breaker output terminal R/L1		
5	R2-2	Resistor bank terminal R2-2 to circuit breaker output terminal S/L2		
6	R3-2	Resistor bank terminal R3-2 to circuit breaker output terminal T/L3		

AC Precharge Resistor Bank Ratings (Frame 7)

Cat. No.	Resistance *(Ohms)*
20-750-MACPR-CD-F7M	0.83
20-750-MCAPR-EF-F7M	1.5

AC Precharge Resistor Bank (Frame 7) Connection Diagram

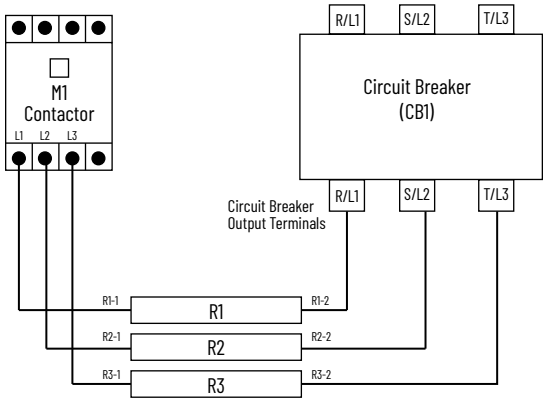

DC Bus Conditioner (Frames 8...15)

The DC bus conditioner contains the following connections. -DC and +DC bus connections must be as short as possible.

IMPORTANT Do not remove protective covers from wire harnesses, circuit board connectors, terminal blocks, and fiber-optic ports unless used at the time of installation. Removing a protective cover can lead to contamination.

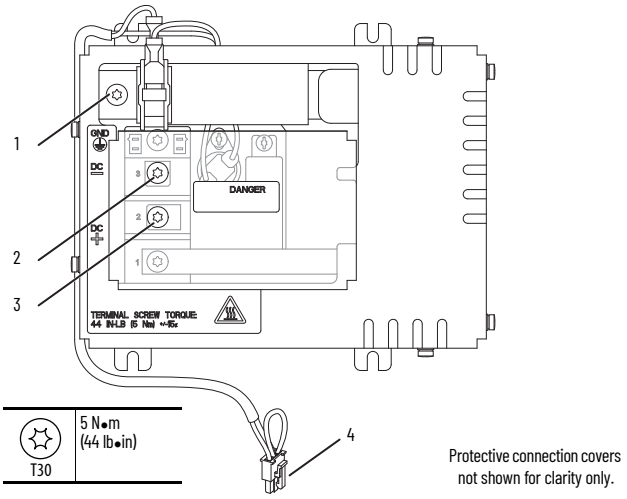

No.	Name	Description	Terminal Torque N•m (lb•in)	Conductor Cross Section	
				ISO (mm^2)	AWG
1	GND	Connection to PE ground	5 (44)	13.3	6
2	- DC	Connects to -DC bus		13.3	6
3	+ DC	Connects to +DC bus		13.3	6
4	P2	DC bus conditioner status signal connection to J2 on the power module I/O board	–	–	–
	P13	DC bus conditioner status signal connection to J13 on the NRS module main control board	–	–	–

DC Bus Conditioner Ratings (Frames 8...12)

Cat. No.	DC Input Voltage	Amps(1)	Frame	Use w/NRS
20-750-MDCBUS-COND	1000	100	8...15	Yes
20-750-MDCBUS1-COND (for marine applications)	1000	100	8...12	Yes

(1) This kit contains internal fusing that limits fault current to 100 A (Mersen semiconductor protection fuse, catalog number A100P100-4TA).

DC Bus Conditioner Connection Diagram (Frames 8...15)

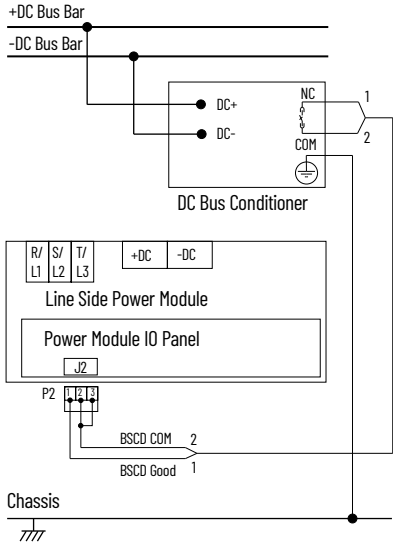

DC Bus Conditioner Connection Diagram (NRS)

NRS 1X Module Shown. Connections are the Same for NRS 2X Modules.

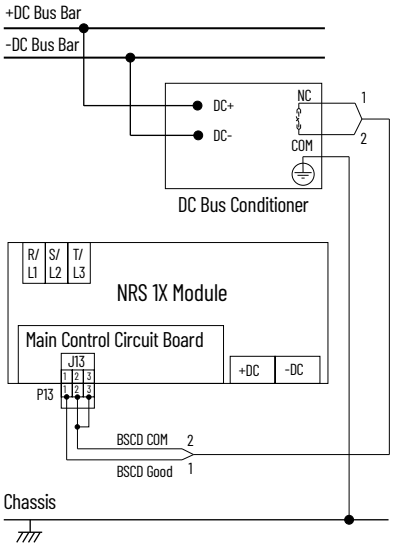

DC Bus Conditioner (Frame 7)

The DC bus conditioner contains the following connections.

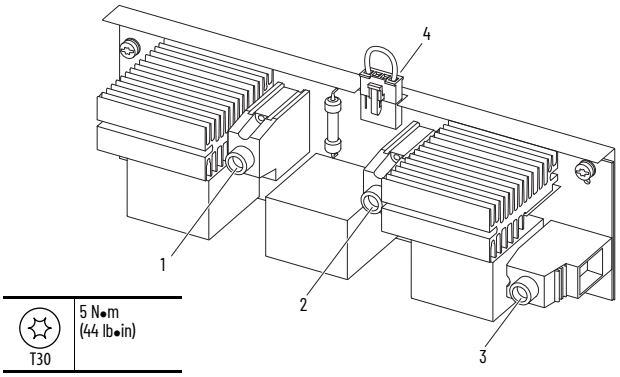

No.	Name	Description	Terminal Torque N•m (lb•in)	Conductor Cross Section	
				ISO (mm^2)	AWG
1	- DC	Connects to -DC bus	5 (44)	10	8
2	+ DC	Connects to +DC bus		10	8
3	GND	Connection to PE ground		10	8
4	P3	Ground jumper (DR). Connected by default. Disconnect for marine applications.	–	–	–

DC Bus Conditioner Ratings (Frame 7)

Cat. No.	DC Input Voltage	Amps
20-750-MDCBUS-COND-F7M	1000	70

DC Bus Conditioner (Frame 7) Connection Diagram

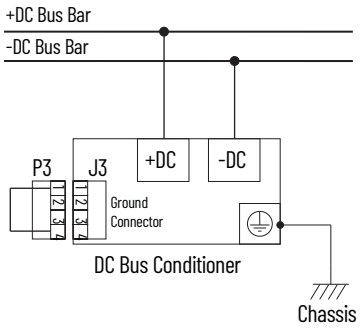

Marine Discharge Circuit Board (Frame 7)

The marine discharge circuit board contains the following connections. The marine discharge circuit board kit excludes the wire harness that is required for connection to the DC bus bars and chassis ground and must be customer-sourced. See the PowerFlex 755TM IP00 Open Type Kits Installation Instructions, publication 750-IN101, for details.

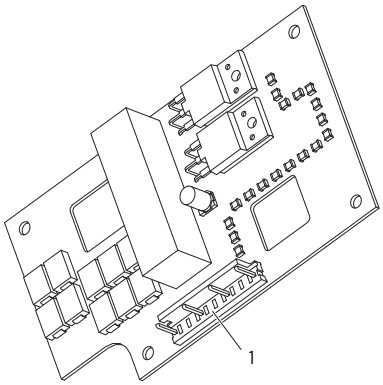

No.	Name	Description
1	J1	Connects to +DC and -DC bus bars and PE ground on chassis.

Marine Discharge Board (Frame 7) Rating

Cat. No.	DC Input Voltage
20-750-MBSCD-DB	1000

Marine Discharge Board (Frame 7) Connection Diagram

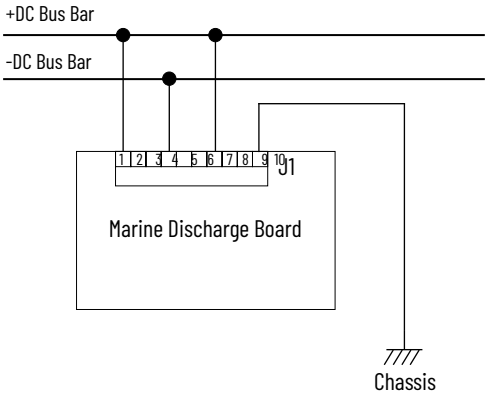

AC Precharge TVSS Module

The TVSS module contains the following connections.

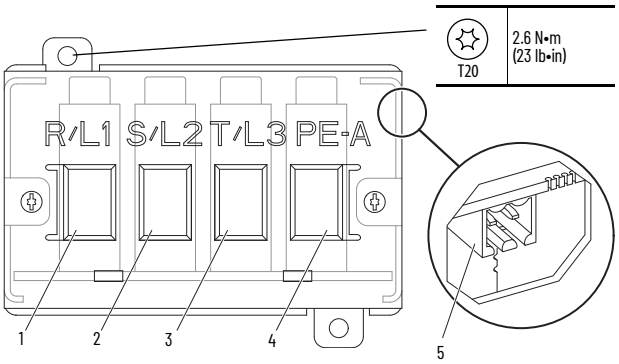

No.	Name	Description
1	R/L1	Connection to circuit breaker output terminal CB1-R/L1
2	S/L2	Connection to circuit breaker output terminal CB1-S/L2
3	T/L3	Connection to circuit breaker output terminal CB1-T/L3
4	PE-A1	Power jumper PE-A2
5	P15	TVSS status signal connection to J11 on the AC precharge control board

AC Precharge TVSS Module Wire Specifications

Conductor Cross Section		Recommended Terminal Torque	Strip Length
ISO *(mm²)*	AWG	*N•m (lb•in)*	*mm (in.)*
0.5 ...35.0	20 ...1	2.5 (22)	15 (0.6)

AC Precharge TVSS Module Ratings

Cat. No.	Voltage	Frame
20-750-MACP-CD-TVSS	400/480	7...15
20-750-MACP-EF-TVSS	600/690	7...15

EMC C2 Filter

The EMC C2 filter kit is used for PowerFlex 755T product installations that require compliance with CE EN61800-3 Category C2 for conducted emissions only. To meet compliance, all EMC C2 filter kits that are listed in this publication (for the applicable equivalent frame size) must be installed in the recommended Rittal TS8 enclosure and connected to the appropriate PowerFlex 755T products. See Bus Bar Assemblies on page 15 for the required EMC C2 Filter bus bar kits. See Lift the EMC C2 Filter on page 7 for lifting instructions.

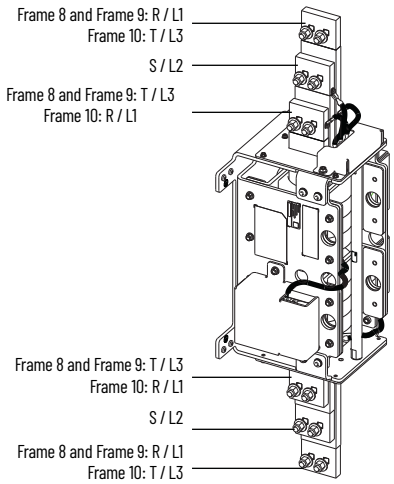

EMC C2 Filter Ratings

Cat. No.	Kit Description	Rated Voltage	Rated Amps
20-750-MEMCC2-F8910 (1)	EMC C2 Filter, IP00, Frame 8...10	400...690	2100

(1) This kit includes three ferrite cores and the hardware required for connecting to the EMC C2 bus bar kits used with the EMC C2 filter. See the PowerFlex 755TM IP00 Open Type Kits Installation Instructions, publication 750-IN101, for instructions on where to install the ferrite cores.

Lift the EMC C2 Filter

ATTENTION: Follow these precautions to guard against possible personal injury and/or equipment damage when preparing to lift, transport, and install EMC C2 filters:

- Inspect all lifting hardware for proper attachment before lifting the filter.
- Do not allow any part of the filter or lifting mechanism to make contact with electrically charged conductors or components.
- Do not subject the filter to high rates of acceleration or deceleration while transporting to the installation location or while lifting.
- Do not allow personnel or their limbs directly underneath the filter when it is lifted and installed.

The EMC C2 filter weighs 31.75 kg (70 lb). For detailed instructions on how to unpack and lift the EMC C2 filter (cat. no. 20-750-MEMCC2-F8910) out of the shipping crate, see this publication that shipped with the filter kit:

- PowerFlex 755TM IP00 EMC C2 Filter Unpacking and Lifting Instructions, publication 750-IN109.

Torque Accuracy Module

The optional torque accuracy module contains the following connections (shown with cover removed).

IMPORTANT Do not remove protective covers from wire harnesses, circuit board connectors, terminal blocks, and fiber-optic ports unless used at the time of installation. Removing a protective cover can lead to contamination.

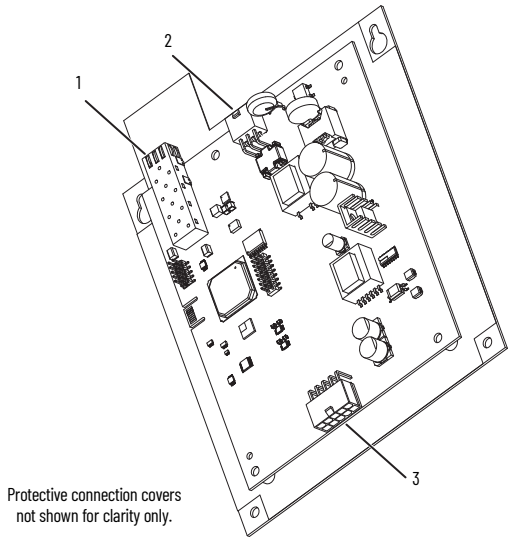

Protective connection covers not shown for clarity only.

No.	Name	Description
1	J3	Fiber transceiver port for fiber-optic connection ACP1/TAM on the fiber transceiver board in the control pod. This connection is at line voltage. **ATTENTION:** A shock hazard exists on terminal J3. To avoid injury, do not remove the module cover.
2	J1	240V AC, 0.1 A and optional 24V DC, 0.5 A control power supply from the control bus connector P4 or customer-supplied source
3	J2	From the AC bus connections U/T1, V/T2, W/T3

Torque Accuracy Module Ratings

Cat. No.	Voltage
20-750-MTAM1-CD	400/480
20-750-MTAM1-EF	600/690

Torque Accuracy Module Connection Diagram

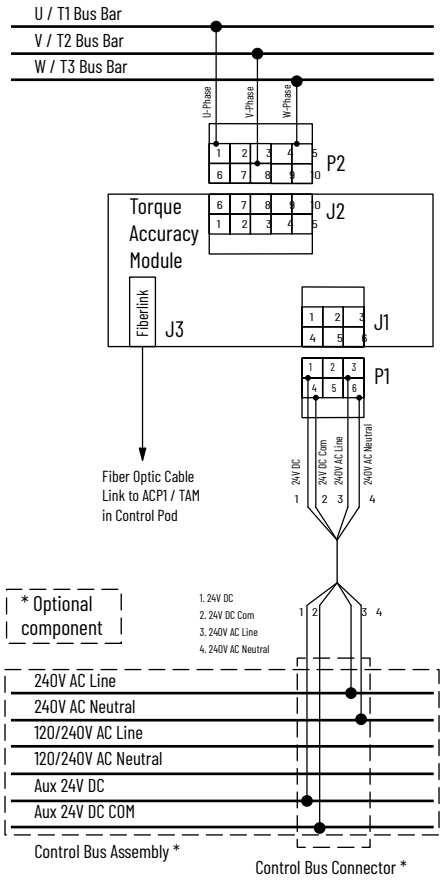

Control Bus

These tables list the available control bus assembly kits.

Control Bus Assembly Ratings(1)

Cat. No.	Max. Voltage	Cabinet Width *mm (in.)*	Cabinet Type	Equivalent Frame Size	Used for NRS
20-750-MCBUS1-CB-F8M	240	300 (12)	Control bay	8...15	–
20-750-MCBUS1-IB-F8M	240	400 (16)	Input bay/ Wire bay	8...10	Yes
20-750-MCBUS1-PB-F8M	240	400 (16)	Power bay	8	Yes
20-750-MCBUS1-IB-F9M	240	600 (24)	Input bay	9	–
20-750-MCBUS1-PB-F9M	240	600 (24)	Power bay	9...15	Yes
20-750-MCBUS1-PB-F10M	240	800 (31)	Power bay	8...15	Yes
20-750-MCBUS1-IB-F10M	240	1000 (39)	Input bay	10...15	–

(1) If you use a control bus assembly kit, you must also use the control bus splice kit and a control bus connector kit listed in the following tables.

Control Bus Splice Ratings

Cat. No.	Max. Voltage	Equivalent Frame Size	Used for NRS
20-750-MCTRLBUS-SPL	240	8...15	Yes

Control Bus Connector Ratings

Cat. No.	Max. Voltage	Equivalent Frame Size	Used for NRS
20-750-MCTRLBUS-CONN1	240	8...15	Yes
20-750-MCTRLBUS-CONN2	240	10...15	–

Control Bus Connector Details

The control bus connector in 20-750-MCTRLBUS-CONN2 is required to connect a 240V AC power supply to the 1000 mm wide input bay control bus assembly kit, cat. no. 20-750-MCBUS1-IB-F10M. The connector in 20-750-MCTRLBUS-CONN2 uses the following connections.

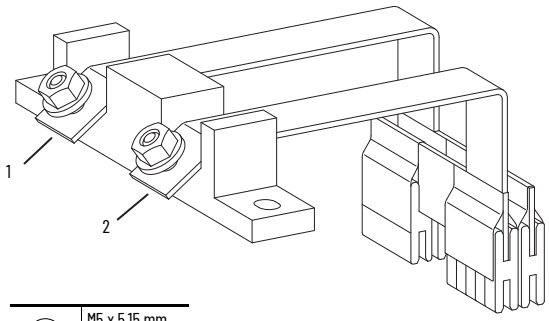

M5	M5 x 5.15 mm 8 mm

No.	Position Name	Description	Conductor Cross Sections		Terminal Specifications	Torque
			ISO *(mm²)*	AWG	mm²	N•m (lb•in)
1	240V L	240V AC line	(1)	(1)	Stud: M5 Pad Area: 19	4.8 (42)
2	240V N	240V AC neutral (connected to PE)				

(1) Size according to US NEC or applicable national or local codes.

The control bus connector in 20-750-MCTRLBUS-CONN1 uses the following tension clamp terminal connections.

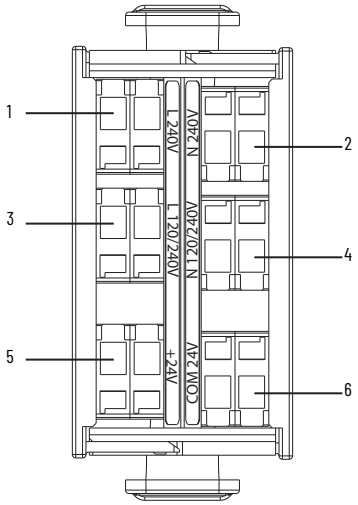

No.	Name	Description	Conductor Cross Sections(1)		
			ISO *(mm²)*	AWG	Strip Length *mm (in.)*
1	L 240V	240V AC line	0.2...2.5	26...14	7 (0.28)
2	N 240V	240V AC neutral	0.2...2.5	26...14	7 (0.28)
3	L 120V/240V	120/240V AC line(2)	0.2...2.5	26...14	7 (0.28)
4	N 120V/240V	120/240V AC neutral(2)	0.2...2.5	26...14	7 (0.28)
5	+24V	24V DC power	0.2...2.5	26...14	7 (0.28)
6	COM 24V	24V DC common	0.2...2.5	26...14	7 (0.28)

(1) Use minimum 90 °C (194 °F) insulation.
(2) Used for optional 240V AC only for the PowerFlex 755TM Non-Regenerative Supply.

Ventilation Kits (Frames 8...15)

This section describes ventilation kits for frames 8...15 PowerFlex 755T products.

Cat. No.	Cabinet Width *mm (in.)*	Cabinet Type	Enclosure Rating	Equivalent Frame Size
20-750-MVENT2-F8M(1)	400 (16)	Power bay	IP54, Type 12	8
20-750-MVENT2-F9M(1)	600 (24)	Power bay	IP54, Type 12	8...15
20-750-MVENT2-F10M(1)	800 (31)	Power bay	IP54, Type 12	8...15
20-750-MVENTC2-F8M	300 (12)	Control bay	IP54, Type 12	8...15
	400 (16)	Input bay	IP21, Type 1/ IP54, Type 12	8
	600 (24)	Input bay	IP21, Type 1/ IP54, Type 12	9
20-750-MVENTC1-F11M	1000 (39)	Input bay	IP21, Type 1	10...15
20-750-MVENTC2-F11M	1000 (39)	Input bay	IP54, Type 12	10...15

(1) These kits contain this fuse: Time Delay, 250V, 3.5 A Cartridge.

Ventilation Kit Temperature Specifications

This table provides the operating temperature limits for the IP00 ventilation kits that contain fans.

Cat. No.	Accessory	Cabinet Type	Inlet Temperature Range *°C (°F)*
20-750-MVENT2-F8M	Ventilation kit - roof fan (IP54, Type 12)	Power bay (400 mm)	-40...70 (-40...158)
20-750-MVENT2-F9M		Power bay (600 mm)	
20-750-MVENT2-F10M		Power bay (800 mm)	
20-750-MVENTC2-F8M	Ventilation kit - roof fan (IP21, Type 1 / IP54, Type 12)	Control bay and input bay (400 mm and 600 mm)	-25...80 (-13...176)
20-750-MVENTC1-F11M	Ventilation kit - door fans (IP21, Type 1)	Input bay (1000 mm)	-25...75 (-13...167)
20-750-MVENTC2-F11M	Ventilation kit - door fans (IP54, Type 12)	Input bay (1000 mm)	

Control Transformer with Fuse Holders and Fuses

This table contains the control transformers, fuse holders, and fuses used with NRS modules and wire bay fans and to provide optional 240V AC control power for NRS systems. All kits include mounting brackets, DIN rails and hardware, feed-through terminal blocks and interconnection wire harnesses. See Control Transformer Schematics for use in an NRS system.

Control Transformer					Primary Fuses (Bussman)			Primary Fuse Holder (Bussman)		Secondary Fuse (Bussman)			Secondary Fuse Holder (Bussman)	
Cat. No.	**Voltage**	**Rating** *(KVA)*	**Primary** *(A)*	**Secondary** *(A)*	**Cat. No.**	**Rating** *(V / A)*	**Fuse Qty. (ID)**	**Cat. No.**	**Qty.**	**Cat. No.**	**Rating** *(V / A)*	**Fuse Qty. (ID)**	**Cat. No.**	**Qty.**
20-750-MN-XMFR1-CD	400V	1	1.0	2.0	LP-CC-6	600 / 6	2 (FH1, FH2)	CHCC2DU	1	LP-CC-6	600 / 6	1 (FH3)	CHCC1DU	1
	480V		1.2											
20-750-MN-XMFR1-EF	600V		0.8											
	690V		0.7		FR10GG69V4	690 / 4								
20-750-MN-XMFR2-CD	400V	3	7.5	12.5	LP-CC-20	600 / 20	2 (FH4, FH5)			LP-CC-15	600 / 15	1 (FH6)		
	480V		6.25											
20-750-MN-XMFR2-E	600V		5.0											
20-750-MN-XMFR2-F	690V		4.35		FR10GG69V12	690 / 12								

Control Transformer Schematics

Cat. NO. 20-750-MN-XMFR1-*xx*, 1 kVA

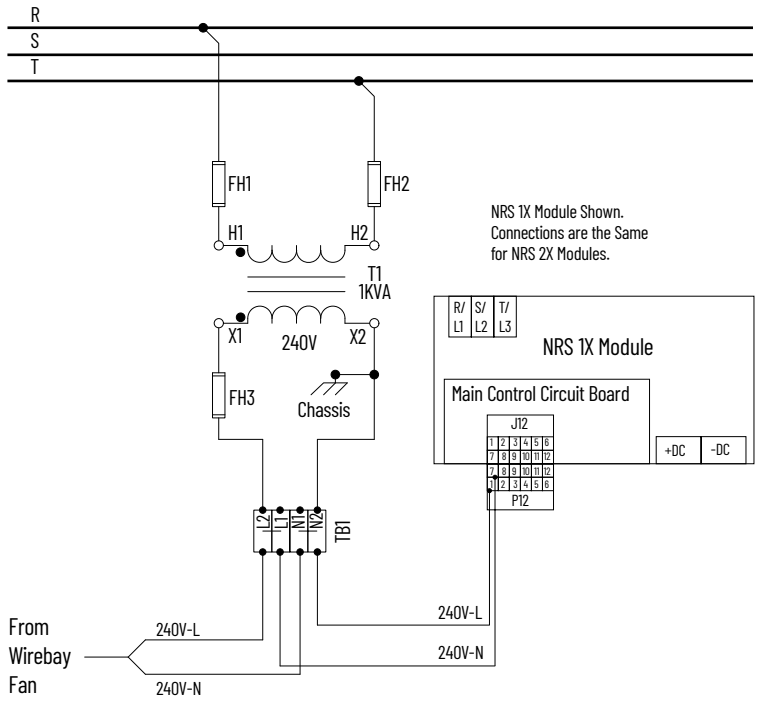

Cat. NO. 20-750-MN-XMFR2-*xx*, Cat. NO. 20-750-MN-XMFR2-*x*, 3 kVA

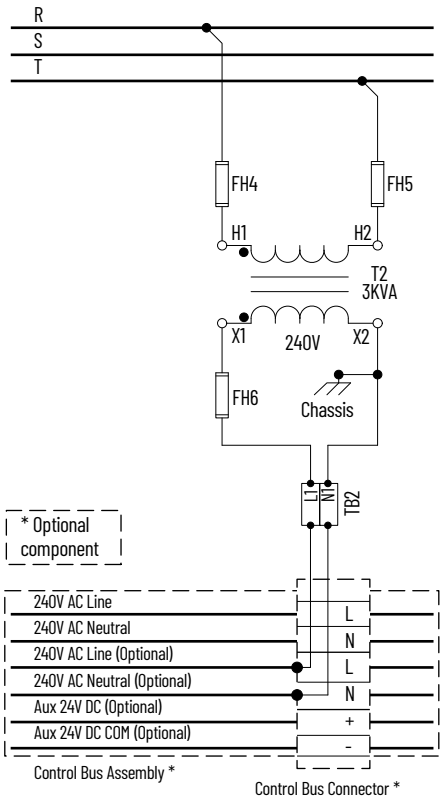

Non-Regenerative Supply Thermal Switch Interconnect Harness Kits

The interconnect wire harnesses are used to connect a thermal switch installed in an NRS wire bay to a NRS module when installed in an NRS power bay and connect parallel NRS modules.

Cat. No.	Description	From	Connector	To	Connector	Length mm (in.)
20-750-MNIH1	NRS module interconnect harness	Power bay	J25/J26	Power module	J12	925.0 (36.4)
20-750-MNIH2	Thermal switch signal interconnect harness for parallel NRS module, in-line configurations only.	Front wire bay	J28	Front power bay	J25	2000.0 (78.7)
				Rear wire bay	J28	
		Front power bay	J25	Rear power bay	J25	
		Rear wire bay	J28	Rear power bay	J25	
20-750-MNIH3	Thermal switch signal interconnect harness for parallel NRS module, back-to-back configurations only.	Front wire bay	J28	Front power bay	J25	1450.0 (57.1)
				Rear wire bay	J28	
		Front power bay	J25	Rear power bay	J25	
		Rear wire bay	J28	Rear power bay	J25	
20-750-MNIH-JMP1	NRS modules signal interconnect loop-back harness for last parallel NRS module.	—	—	Power bay	J26	—
20-750-MNIH-JMP2	NRS module signal interconnect harness for parallel NRS module configurations only.	Power bay	J26	Power bay	J25	370.0 (14.6)
20-750-MNIH-JMP3	Thermal switch signal interconnect harness for wire bay to first power bay.	Wire bay	J26	Power bay	J25	350.0 (13.8)

Wire Entry Bay Kits

These wire entry bay kits are used with PowerFlex 755T product and PowerFlex Non-Regenerative Supply (NRS) IP00 / Type 1 installations.

Wire Entry Bays

Cat. No.	Description	Product / Equivalent Frame Size	Used for NRS	Component	Qty	Cabinet Width *mm (in.)*	Voltage	Material	Thickness *mm (in.)*
20-750-MN-WBAY1-400	Wire Entry Bay	755TL/TR Drive and 755TM Bus Supply: 8...10 (Qty 1) 13 in-line (Qty 2)(1)	Yes	Wire bay	1	400 (16)	400/480/600/690V	–	–
				DC bus bars (slotted)	2	400 (16)	600/690V	Aluminum	27 (1.1)
				DC bus bar splice (for slotted bus)	2	–	600/690V	Aluminum	25.4 (1.0)
				AC bus bars (slotted)	3	400 (16)	600/690V	Aluminum	27 (1.1)
				AC bus bar splice (for slotted bus)	3	–	600/690V	Aluminum	25.4 (1.0)
				Ground bus bar	1	400 (16)	600/690V	Copper	9.5 (0.4)
				Ground bus splice bar	1	–	600/690V	Copper	9.5 (0.4)
				Control bus	1	400 (16)	240V (max.)	–	–
				Control bus splice	1	–	240V (max.)	–	–
				Door fan and NRS wire harness	1	–	240 (max.)	–	–
20-750-MN-WBAY2-400	Wire Entry Bay	755TL/TR Drive and 755TM Bus Supply: 8...10 (Qty 1) 13 in-line (Qty 2)(1)	Yes	Wire bay	2	–	240 (max.)	–	–
				DC bus bars (slotted)	2	400 (16)	600/690V	Copper	37 (1.5)
				DC bus bar splice (for slotted bus)	2	–	600/690V	Copper	25.4 (1.0)
				AC bus bars (slotted)	3	400 (16)	600/690V	Aluminum	27 (1.1)
				AC bus bar splice (for slotted bus)	3	–	600/690V	Aluminum	25.4 (1.0)
				Ground bus bar	1	400 (16)	600/690V	Copper	9.5 (0.4)
				Ground bus splice bar	1	–	600/690V	Copper	9.5 (0.4)
				Control bus	1	400 (16)	240V (max.)	–	–
				Control bus splice	1	–	240V (max.)	–	–
				Door fan and NRS wire harness	1	–	240 (max.)	–	–
20-750-MN-WBAY1-800	Wire Entry Bay	755TL/TR Drive and 755TM Bus Supply: 11 and 12 (Qty 1) 14 and 15 in-line (Qty 2)(1)	Yes	Wire bay	1	800 (31)	400/480/600/690V	–	–
				DC bus bars (slotted)	2	800 (31)	600/690V	Copper	37 (1.5)
				DC bus bar splice (for slotted bus)	2	–	600/690V	Copper	25.4 (1.0)
				AC bus bars (slotted)	3	800 (31)	600/690V	Copper	37 (1.5)
				AC bus bar splice (for slotted bus)	3	–	600/690V	Copper	25.4 (1.0)
				Ground bus bar	1	800 (31)	600/690V	Copper	9.5 (0.4)
				Ground bus splice bar	1	–	600/690V	Copper	9.5 (0.4)
				Control bus	1	800 (31)	240V (max.)	–	–
				Control bus splice	1	–	240V (max.)	–	–
				Door fan and NRS wire harness	1	–	240 (max.)	–	–
20-750-MN-WBAY3-800	Wire Bay (no DC bus)	755TL/TR Drive and 755TM Bus Supply: 11 and 12 (Qty 1) 14 and 15 in-line (Qty 2)(1)	Yes	Wire bay	1	800 (31)	400/480/600/690V	–	–
				AC bus bars (slotted)	3	800 (31)	600/690V	Copper	37 (1.5)
				AC bus bar splice (for slotted bus)	3	–	600/690V	Copper	25.4 (1.0)
				Ground bus bar	1	800 (31)	600/690V	Copper	9.5 (0.4)
				Ground bus splice bar	1	–	600/690V	Copper	9.5 (0.4)
				Control bus	1	800 (31)	240V (max.)	–	–
				Control bus splice	1	–	240V (max.)	–	–
				Door fan and NRS wire harness	1	–	240 (max.)	–	–

(1) When the wire bay is used for PowerFlex 755TM frames 8...15 products, the 240V AC power wire harness for the door fan must be customer sourced. See the PowerFlex 755TM IP00 Open Type Kits Installation Instructions, publication 750-IN101, for details.

PowerFlex 755TM DC Voltage Balance / Wiring Bay Kits

The DC voltage balance/wiring bay kits are required for power wire connections for PowerFlex 755TM frames 13...15 and NRS parallel configurations that support PowerFlex 755TM common bus inverter frame 13...15 installations.

Voltage Balance Bay / Wiring Bay Kits

Cat No.	Cabinet Type	Product / Frame Size	Used for NRS	Component	Quantity	Cabinet Width *mm (in.)*	Voltage	Material	Thickness *mm (in.)*
20-750-DCVBB-400	DC Bus Voltage Balance Bay	755TR Drive / 13	Yes	Wire bay (back-to-back configuration)	2	400 (16)	–	–	–
				DC bus bars (slotted)	4	400 (16)	600/690	Aluminum	27 (1.1)
				DC bus bar splice (for slotted bus)	4	–	600/690	Aluminum	25.4 (1.0)
				DC bus bar splice (flat)	2	–	600/690	Copper	19.05 (0.75)
				DC bus bar splice (L-shaped)	4	–	600/690	Copper	19.05 (0.75)
				AC bus bars	6	400 (16)	600/690	Aluminum	27 (1.1)
				AC bus bar splice	6	–	600/690	Aluminum	25.4 (1.0)
				L-bracket	36	–	600/690	Aluminum	–
				Ground bus bar	6	400 (16)	600/690	Aluminum	9.5 (0.4)
				Ground bus bar splice	2	–	600/690	Aluminum	9.5 (0.4)
				Control bus assembly	2	400 (16)	240 (max.)	–	–
				Control bus splice	2	–	240 (max.)	Copper	–
				Door fan	2	–	240 (max.)	–	–
				Thermal Switch	2	–	400/480 600/690	–	–
20-750-DCVBB-400C	DC Bus Voltage Balance Bay	755TR Drive, 755TM Common Bus Inverter / 13	Yes	Wire bay (back-to-back configuration)	2	400 (16)	–	–	–
				DC bus bars (slotted)	4	400 (16)	600/690	Copper	37 (1.5)
				DC bus bar splice (for slotted bus)	4	–	600/690	Copper	25.4 (1.0)
				DC bus bar splice (flat)	2	–	600/690	Copper	19.05 (0.75)
				DC bus bar splice (L-shaped)	4	–	600/690	Copper	19.05 (0.75)
				AC bus bars	6	400 (16)	600/690	Aluminum	27 (1.1)
				AC bus bar splice	6	–	600/690	Aluminum	25.4 (1.0)
				L-bracket	36	–	600/690	Aluminum	–
				Ground bus bar	2	400 (16)	600/690	Aluminum	9.5 (0.4)
				Ground bus bar splice	2	–	600/690	Aluminum	9.5 (0.4)
				Control bus assembly	2	400 (16)	240 (max.)	–	–
				Control bus splice	2	–	240 (max.)	Copper	–
				Door fan	2	–	240 (max.)	–	–
				Thermal Switch	2	–	400/480 600/690	–	–
20-750-DCVBB-800	DC Bus Voltage Balance Bay	755TR Drive, 755TM Common Bus Inverter / 14, 15	Yes	Wire bay (back-to-back configuration)	2	800 (31)	–	–	–
				DC bus bars (slotted)	4	800 (31)	600/690	Copper	37 (1.5)
				DC bus bar splice (for slotted bus)	4	–	600/690	Copper	25.4 (1.0)
				DC bus bar splice (flat)	2	–	600/690	Copper	19.05 (0.75)
				DC bus bar splice (L-shaped)	4	–	600/690	Copper	19.05 (0.75)
				AC bus bars	6	800 (31)	600/690	Aluminum	27 (1.1)
				AC bus bar splice	6	–	600/690	Aluminum	25.4 (1.0)
				L-bracket	36	–	600/690	Aluminum	–
				Ground bus bar	2	800 (31)	600/690	Aluminum	9.5 (0.4)
				Ground bus bar splice	2	–	600/690	Aluminum	9.5 (0.4)
				Control bus assembly	2	800 (31)	240 (max.)	–	–
				Control bus splice	2	–	240 (max.)	Copper	–
				Door fan	2	–	240 (max.)	–	–
				Thermal Switch	2	–	400/480 600/690	–	–

Voltage Balance Bay / Wiring Bay Kits (continued)

Cat No.	Cabinet Type	Product / Frame Size	Used for NRS	Component	Quantity	Cabinet Width *mm (in.)*	Voltage	Material	Thickness *mm (in.)*
20-750-DCVBB-400-FBR	Wire Entry Bay	755TR Drive / 13	Yes	Wire bay (back-to-back configuration)	2	400 (16)	–	–	–
				DC bus bars (slotted)	2	400 (16)	600/690	Aluminum	27 (1.1)
				DC bus bar splice	2	–	600/690	Aluminum	25.4 (1.0)
				AC bus bars	6	400 (16)	600/690	Aluminum	27 (1.1)
				AC bus bar splice	6	–	600/690	Aluminum	25.4 (1.0)
				L-bracket	36	–	600/690	Aluminum	–
				Ground bus bar (lower)	1	400 (16)	600/690	Aluminum	9.5 (0.4)
				Ground bus bar (upper)	1	600 (24)	600/690	Aluminum	9.5 (0.4)
				Control bus assembly	2	400 (16)	240 (max.)	–	–
				Control bus splice	2	–	240 (max.)	Copper	–
				Door fan	2	–	240 (max.)	–	–
				Thermal Switch	2	–	400/480 600/690	–	–
20-750-DCVBB-400C-FBR	Wire Entry Bay	755TR Drive, 755TM Bus Supply / 13	Yes	Wire bay (back-to-back configuration)	2	400 (16)	-	–	–
				DC bus bars (slotted)	4	400 (16)	600/690	Copper	37 (1.5)
				DC bus bar splice	2	–	600/690	Copper	25.4 (1.0)
				AC bus bars	6	400 (16)	600/690	Aluminum	27 (1.1)
				AC bus bar splice	6	–	600/690	Aluminum	25.4 (1.0)
				L-bracket	36	–	600/690	Aluminum	–
				Ground bus bar (lower)	2	400 (16)	600/690	Aluminum	9.5 (0.4)
				Ground bus bar (upper)	4	600 (24)	600/690	Aluminum	9.5 (0.4)
				Control bus assembly	2	400 (16)	240 (max.)	–	–
				Control bus splice	2	–	240 (max.)	Copper	–
				Door fan	2	–	240 (max.)	–	–
				Thermal Switch	2	–	400/480 600/690	–	–
20-750-DCVBB-800-FBR	Wire Entry Bay	755TR Drive, 755TM Bus Supply / 14, 15	Yes	Wire bay (back-to-back configuration)	2	800 (31)	–	–	–
				DC bus bars (slotted)	4	800 (31)	600/690	Copper	37 (1.5)
				DC bus bar splice	2	–	600/690	Copper	25.4 (1.0)
				AC bus bars	6	800 (31)	600/690	Aluminum	27 (1.1)
				AC bus bar splice	6	–	600/690	Aluminum	25.4 (1.0)
				L-bracket	36	–	600/690	Aluminum	–
				Ground bus bar (lower)	2	800 (31)	600/690	Aluminum	9.5 (0.4)
				Ground bus bar (upper)	4	600 (24)	600/690	Aluminum	9.5 (0.4)
				Control bus assembly	2	800 (31)	240 (max.)	–	–
				Control bus splice	2	–	240 (max.)	Copper	–
				Door fan	2	–	240 (max.)	–	–
				Thermal Switch	2	–	400/480 600/690	–	–

Voltage Balance Bay / Wiring Bay Kits (continued)

Cat No.	Cabinet Type	Product / Frame Size	Used for NRS	Component	Quantity	Cabinet Width *mm (in.)*	Voltage	Material	Thickness *mm (in.)*
20-750-DCVBB-BS	DC Bus Voltage Balance Bay	755TM Bus Supply / 13...15	Yes	Wire bay (back-to-back configuration)	2	800 (31)	–	–	–
				DC bus bars (slotted)	4	800 (31)	600/690	Copper	37 (1.5)
				DC bus bar splice (for slotted bus)	2	–	600/690	Copper	25.4 (1.0)
				DC bus bar splice (flat)	2	–	600/690	Copper	19.05 (0.75)
				DC bus bar splice (L-shaped)	4	–	600/690	Copper	19.05 (0.75)
				Ground bus bar	2	800 (31)	600/690	Aluminum	9.5 (0.4)
				Ground bus bar splice	2	–	600/690	Aluminum	9.5 (0.4)
				Control bus assembly	2	800 (31)	240 (Max.)	–	–
				Control bus splice	2	–	240 (max.)	Copper	–
				Thermal Switch	2	–	400/480 600/690	–	–

DC Voltage Balance Bay (Back-to-Back Configuration) DC Bus Splice Kit (1)

Cat No.	Voltage	Material	Thickness *mm (in.)*	Frame Size	Used for NRS
20-750-DCVBB-SPLICE	400/480/600/690	Copper	19.05 (0.75)	13...15	Yes

(1) This IP00 kit is included with the applicable back-to-back DC voltage balance bay kits specified in the Voltage Balance Bay / Wiring Bay Kits table.

Seismic-qualified Installation Kits

Kits for seismic-qualified installations are available for use with the recommended Rittal TS8 enclosures listed here. See the PowerFlex 750-Series Products with TotalFORCE Control, Installation Instructions, publication 750-IN100, for details.

Cat. No.	Cabinet Types(1)	Equivalent Frame Size
20-750-MOSHPD-F8M	PowerFlex 755T Products, Input Bay, Power Bay, and Exit Wire Bay	8
20-750-MOSHPD-F9M	PowerFlex 755T Products, Input Bay, Power Bay, and Exit Wire Bay	9
20-750-MOSHPD-F10M	PowerFlex 755T Products, Entry Wire Bay, Input Bay, Power Bay, and Exit Wire Bay	10
20-750-MOSHPD-F11M	PowerFlex 755T Products, Entry Wire Bay, Input Bay, Power Bay, and Exit Wire Bay	11
20-750-MOSHPD-F12M	PowerFlex 755T Products, Entry Wire Bay, Input Bay, Power Bay, and Exit Wire Bay	12

(1) Each kit includes parts for the largest possible enclosure lineup for frame size. Therefore, in some cases, not all parts in the kit will be installed.

AC Bus Bar Assemblies (Frames 8...15)

This section provides information about AC bus bar, bus bar splice, and bus bar and fuse assembly kits.

Cat. No.[1]	Voltage	Cabinet Width *mm (in.)*	Cabinet Type	Material	Thickness *mm (in.)*	Equivalent Frame Size	Used for NRS
AC Input Bus Bar Kits							
20-750-MCNCTAC-F8	600/690	400 (16)	Input bay	Aluminum	12.7 (0.5)	8	–
20-750-MCNCTAC-F9	600/690	600 (24)	Input bay	Aluminum	12.7 (0.5)	9	–
20-750-MACBUS6-3K0	600/690	600 (24)	Power bay	Aluminum	27 (1.1)	10, 13	–
20-750-MACBUS6-4K7	600/690	600 (24)	Power bay	Copper	27 (1.1)	12, 15	–
20-750-MACBUS8-3K0	600/690	800 (31)	Power bay	Aluminum	27 (1.1)	9, 10, 13	–
20-750-MACBUS8-4K7	600/690	800 (31)	Power bay	Copper	27 (1.1)	11, 12, 14, 15	–
20-750-MACBUS10-3K0	600/690	1000 (39)	Input bay	Aluminum	27 (1.1)	10, 13	–
20-750-MACBUS10-4K7	600/690	1000 (39)	Input bay	Copper	27 (1.1)	11, 12, 14, 15	–
AC Bus Bar Kits (Top Cable Exit/Entry)							
20-750-MTEBUS2-3K0	600/690	400 (16)	Wire bay	Aluminum	27 (1.1)	8...10, 13	–
20-750-MTEBUS1-4K7	600/690	800 (31)	Wire bay	Copper	37 (1.5)	11, 12, 14, 15	–
AC Bus Splice Kits							
20-750-MACSPL1-F10M	600/690	–	Power bay	Aluminum	27 (1.1)	10, 13	–
20-750-MACSPL1-F11M	600/690	–	Power bay	Copper	37 (1.5)	10...15	–
20-750-MACSPL2-F8M	600/690	–	Input bay	Aluminum	9.5 (0.4)	8	–
20-750-MACSPL2-F9M	600/690	–	Input bay	Aluminum	500 MCM[2]	9	–
20-750-MACSPL2-3K0	600/690	–	Input bay, entry wire bay	Aluminum	27 (1.1)	10, 13	Yes
20-750-MACSPL2-4K7	600/690	–	Input bay, entry wire bay	Copper	37 (1.5)	10...15	Yes
20-750-MACSPL3-F8M	600/690	–	Input bay, right-to-left orientation	Aluminum	9.5 (0.4)	8	–
20-750-MACSPL3-F9M	600/690	–	Input bay, right-to-left orientation	Aluminum	500 MCM[2]	9	–
20-750-MTESPL1-F8M	600/690	–	Wire bay, top cable exit	Aluminum	6 (0.2)	8	–
20-750-MTESPL2-F8M	600/690	–	Wire bay, top cable exit, right-to-left orientation	Aluminum	6 (0.2)	8	–
20-750-MTESPL2-F10M	600/690	–	Wire bay, top cable exit	Aluminum	25 (1.0)	9, 10, 13	Yes
20-750-MTESPL3-F12M	600/690	–	Wire bay, top cable exit	Copper	25 (1.0)	10...15	Yes
AC Input Link Bus Bar and Fuse Assembly Kits							
20-750-MACL1-F8M	400/480/600/690	–	Power bay	Aluminum	9.5 (0.4)	8	–
20-750-MACL1-F9M	400/480	–	Power bay	Aluminum	9.5 (0.4)	9	–
20-750-MACL2-F8M	400/480	–	Power bay	Aluminum	9.5 (0.4)	10, 12	–
	600/690	–	Power bay			9	–
20-750-MACL2-F9M	400/480	–	Power bay	Aluminum	9.5 (0.4)	9...15	–
20-750-MACL3-F8M	600/690	–	Power bay	Aluminum	9.5 (0.4)	9	–
20-750-MACL3-F9M	600/690	–	Power bay	Aluminum	9.5 (0.4)	9...15	–
AC Precharge Circuit Breaker Bus Bar Kits							
20-750-MCBBUS1-2K0	600/690	2000 A	Input bay	Copper	27 (1.1)	10, 13	–
20-750-MCBBUS1-2K5	600/690	2500 A	Input bay	Copper	27 (1.1)	11, 14	–
20-750-MCBBUS1-3K0	400/480/600	3000 A	Input bay	Copper	27 (1.1)	10, 12, 13, 15	–
20-750-MCBBUS1-5K0	400/480	5000 A	Input bay	Copper	27 (1.1)	11, 12, 14, 15	–
20-750-MCBBUS2-3K0	690	3000 A	Input bay	Copper	27 (1.1)	12, 15	–
AC Bus Bar Kits for EMC C2 Filter							
20-750-MEMCC2-F8[3]	600/690	800 (31)	Option bay	Copper	15.875 (0.625)	8	–
20-750-MEMCC2-F9[4]	600/690	800 (31)	Option bay	Copper	15.875 (0.625)	9	–
20-750-MEMCC2-F10[5]	600/690	800 (31)	Option bay	Copper	15.875 (0.625)	10	–
20-750-MEMCC2-IPBB[6]	600/690	800 (31)	Option bay	Copper	15.875 (0.625)	8...10	–

(1) Not all of these assemblies are suitable for direct connections to power wiring. See Power Cable Connections for details.
(2) This measurement reflects a wire size.
(3) To meet EMC C2 compliance for conducted emissions, the plastic airflow baffle and ground cable (included with this kit) and the frame 8 AC input bus bar assembly (cat. no. 20-750-MCNCTAC-F8) must be installed with this kit.
(4) To meet EMC C2 compliance for conducted emissions, the plastic airflow baffle and ground cable (included with this kit) and the frame 9 AC input bus bar assembly (cat. no. 20-750-MCNCTAC-F9) must be installed with this kit.
(5) To meet EMC C2 compliance for conducted emissions, the ground bus splice (included with this kit) and the frame 10...12, 1000 mm wide AC input bus bars (cat. no. 20-750-MACBUS10-3K0 or 20-750-MACBUS10-4K7) must be installed with this kit.
(6) This kit includes a ground bus bar that must be installed in the wire bay to meet EMC C2 compliance for conducted emissions.

AC Input Link Bus Bar and Fuse Assembly Kit Fuses (Frames 8...15)

The AC input link bus bar and fuse assembly kits contain fuses that, when used with an LCL filter module (catalog numbers 20-750-ML1-*xnnnxnnn*), provide short circuit protection.

Bus Bar Assembly and Fuse Kit Cat. No.	Frame	LCL Filter Module (1)	Voltage Rating	Bussman Fuse Number	Fuse Rating	Kit Fuse Qty.
20-750-MACL1-F8M	8	One 20-750-ML1-C540D505	400/480	170M6463	690/700V (IEC/U.L.), 900 A (2)	3
20-750-MACL1-F8M		One 20-750-ML1-E395F370	600/690	170M6463	690/700V (IEC/U.L.), 900 A (2)	3
20-750-MACL1-F9M	9	One 20-750-ML1-C1K1D1K0	400/480	170M6470	690/700V (IEC), 1800 A (3)	3
20-750-MACL2-F9M		One 20-750-ML1-C1K4D1K3	400/480	170M6471	690/700V (IEC), 2000 A (4)	3
20-750-MACL3-F9M		One 20-750-ML1-E980F920	600/690	170M6469	690/700V (IEC/U.L.), 1600 A (2)	3
20-750-MACL2-F9M	10	One 20-750-ML1-C770D740 and one 20-750-ML1-C1K4D1K3	400/480	170M6471	690/700V (IEC), 2000 A (4)	3
20-750-MACL3-F9M		One 20-750-ML1-C770D740 and one 20-750-ML1-C1K4D1K3	400/480	170M6469	690/700V (IEC/U.L.), 1600 A (2)	3
20-750-MACL2-F9M	11	Two 20-750-ML1-C1K4D1K3	400/480	170M6471	690/700V (IEC/U.L.), 1600 A (4)	3
20-750-MACL3-F9M		Two 20-750-ML1-E980F920	600/690	170M6469	690/700V (IEC/U.L.), 1600 A (2)	3
20-750-MACL2-F9M	12	One 20-750-ML1-C770D740 and two 20-750-ML1-C1K4D1K3	400/480	170M6463	690/700V (IEC), 2000 A (4)	3
20-750-MACL3-F9M		One 20-750-ML1-E545F505 and two 20-750-ML1-E980F920	600/690	170M6469	690/700V (IEC/U.L.), 1600 A (2)	3
20-750-MACL2-F9M	13	Two 20-750-ML1-C770D740 and two 20-750-ML1-C1K4D1K3	400/480	170M6471	690/700V (IEC), 2000 A (4)	3
20-750-MACL3-F9M		Two 20-750-ML1-C770D740 and two 20-750-ML1-C1K4D1K3	400/480	170M6469	690/700V (IEC/U.L.), 1600 A (2)	3
20-750-MACL2-F9M	14	Four 20-750-ML1-C1K4D1K3	400/480	170M6471	690/700V (IEC/U.L.), 1600 A (4)	3
20-750-MACL3-F9M		Four 20-750-ML1-E980F920	600/690	170M6469	690/700V (IEC/U.L.), 1600 A (2)	3
20-750-MACL2-F9M	15	Two 20-750-ML1-C770D740 and four 20-750-ML1-C1K4D1K3	400/480	170M6463	690/700V (IEC), 2000 A (4)	3
20-750-MACL3-F9M		Two 20-750-ML1-E545F505 and four 20-750-ML1-E980F920	600/690	170M6469	690/700V (IEC/U.L.), 1600 A (2)	3

(1) Each LCL filter module requires one AC input link bus bar and fuse assembly kit.
(2) Bussman Square Body - Flush End Contact -BKN/- Type K Indicator.
(3) Bussman Square Body - Flush End Contact -BKN/- Type K Indicator. Rated Voltage IEC 600V (Consult Bussmann for U.L. Recognition/ CSA Component Acceptance status.)
(4) Bussman Square Body - Flush End Contact -BKN/- Type K Indicator. Rated Voltage IEC 550V (Consult Bussmann for U.L. Recognition/ CSA Component Acceptance status.)

AC Input Fuse (Frames 8...15) Connection Diagram

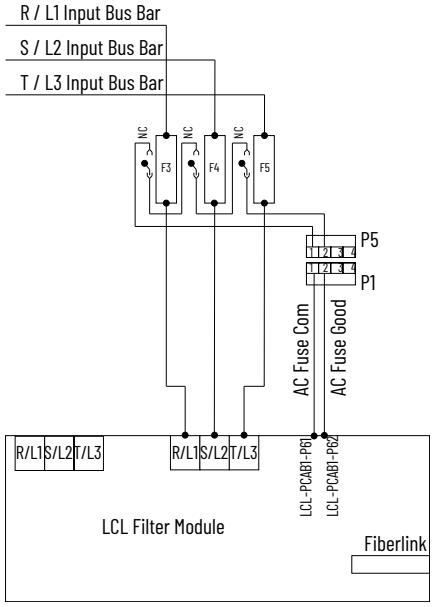

AC Input Fuse (Frame 7) Connection Diagram

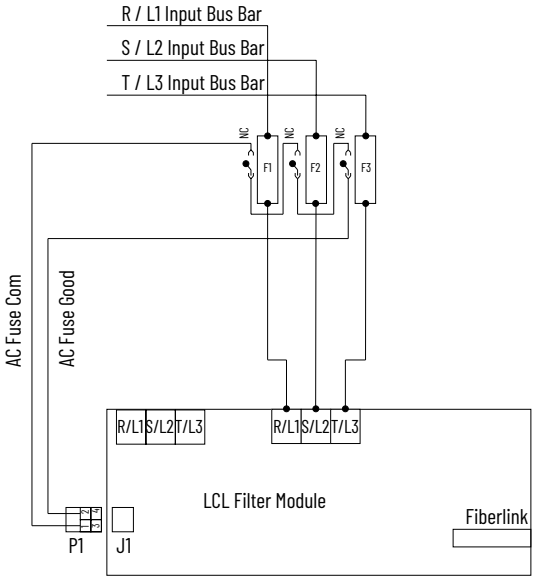

Stab Receptacle Assemblies and Stab Receptacles with Back Panel and Bus Bars

This section provides information about the stab receptacle assemblies and stab receptacle assemblies with back panel and bus bars.

Assembly Cat. No.	Voltage	Cabinet Width *mm (in.)*	Cabinet Type	Material	Module	With Back Panel	Frame Size	Used for NRS
20-750-MACR1-F8M	600/690	600 (24)	Power bay	Aluminum	LCL filter and one line-side converter	Yes	8,10,12,13,15	–
20-750-MACR1-F9M	600/690	800 (31)	Power bay	Aluminum	LCL filter and two line-side converters	Yes	9...15	–
20-750-MACR2-F8M(1)	600/690	600 (24)	Power bay	Aluminum	LCL filter and one line-side converter	Yes	8,10,12,13,15	–
20-750-MADR1-F8M	600/690	800 (31)	Power bay	Aluminum	LCL filter and two line-side inverters	Yes	8, 10, 12	–
20-750-MADR2-F8M(1)	600/690	800 (31)	Power bay	Aluminum	Motor-side inverter, line-side converter, LCL filter	Yes	8	–
20-750-MDCREC1-F8M	600/690	–	Power bay	Aluminum	DC precharge	Yes	8...15	–
20-750-MDCREC1-F8MC	600/690	–	Power bay	Copper	DC precharge	Yes	8...15	–
20-750-MIR1-F10M(2)	600/690	800 (31)	Power bay	Aluminum	Motor-side inverters (three in parallel)	Yes	10, 12	–
20-750-MIR1-F8M	600/690	400 (16)	Power bay	Aluminum	Motor-side inverter (single)	Yes	8	–
20-750-MIR1-F9M(2)	600/690	600 (24)	Power bay	Aluminum	Motor-side inverters (two in parallel)	Yes	9, 11, 12	–
20-750-MIR2-F10M(3)	600/690	800 (31)	Power bay	Copper	Motor-side inverters (three in parallel)	Yes	10, 12, 13, 15	–
20-750-MIR2-F9M(4)	600/690	600 (24)	Power bay	Copper	Motor-side inverters (two in parallel)	Yes	9, 11, 12, 14, 15	–
20-750-MNIR1	600/690	400 (16)	Power bay	Aluminum(5)	Non-regenerative converter	Yes	–	Yes
20-750-MNIR2	600/690	400 (16)	Power bay	Copper	Non-regenerative converter	Yes	–	Yes
20-750-MNIR3	600/690	600 (24)	Power bay	Copper	Non-regenerative converter (two in parallel)	Yes	–	Yes
20-750-MNIR4	600/690	800 (31)	Power bay	Copper	Non-regenerative converter (three in parallel)	Yes	–	Yes
20-750-MREC1-F8M(6)	600/690	–	Power bay	Aluminum	Power or LCL filter	No	8...15	–
20-750-MREC1-F8MC(6)	600/690	–	Power bay	Copper	Power or LCL filter	No	8...15	–

(1) For right-to-left orientation.
(2) Use this kit only when an exit wire bay is not used.
(3) This catalog number must be used for frames 10, 12, 13, and 15 when an exit wire bay is used.
(4) This catalog number must be used for frames 9, 11, 12, 14, and 15 when an exit wire bay is used.
(5) The slotted bus bars contained in this kit are aluminum. The phase connecting bus bars are copper.
(6) Replacement stab receptacle assembly only.

DC Bus Bar Assemblies (Frames 8...15, NRS)

This section provides information about DC bus bar, bus bar splice, and bus bar and fuse assembly kits.

Cat. No.(1)	Voltage	Cabinet Width *mm (in.)*	Cabinet Type	Material	Thickness *mm (in.)*	Equivalent Frame Size	Used for NRS
DC Bus Bar Kits							
20-750-MDCBUS3-3K0	DC	300 (12)	Control bay	Aluminum	27 (1.1)	8...12	–
20-750-MDCBUS3-4K7	DC	300 (12)	Control bay	Copper	37 (1.5)	8...15	–
20-750-MDCBUS4-3K0	DC	400 (16)	Power bay	Aluminum	27 (1.1)	8	Yes
20-750-MDCBUS4-4K7	DC	400 (16)	Power bay	Copper	37 (1.5)	8	Yes
20-750-MDCBUS6-3K0	DC	600 (24)	Power bay	Aluminum	27 (1.1)	9, 10, 13	Yes
20-750-MDCBUS6-4K7	DC	600 (24)	Power bay	Copper	37 (1.5)	10...15	Yes
20-750-MDCBUS8-3K0	DC	800 (31)	Power bay	Aluminum	27 (1.1)	9, 10, 13	Yes
20-750-MDCBUS8-4K7	DC	800 (31)	Power bay	Copper	37 (1.5)	10...15	Yes
20-750-MDCBUS10-3K0	DC	1000 (39)	Input bay	Aluminum	27 (1.1)	10, 13	–
20-750-MDCBUS10-4K7	DC	1000 (39)	Input bay	Copper	37 (1.5)	10...15	–
DC Bus Splice Bar Kits							
20-750-MDCSPL1-3K0	DC	–	–	Aluminum	25 (1.0)	8...10, 13,	Yes
20-750-MDCSPL1-4K7	DC	–	–	Copper	25 (1.0)	10...15	Yes

(1) Not all of these assemblies are suitable for direct connections to power wiring. See Power Cable Connections for details.

Bus Bar Kits (Frame 7)

This section provides information about the circuit breaker bus bar kits for frame 7 Regenerative Drives and Bus Supplies.

Cat. No.	Voltage	Cabinet Width *mm (in.)*	Cabinet Type	Material	Thickness *mm (in.)*
AC Input/Output Bus Bar Terminal Kit					
20-750-MACIOT-F7M	400/480/600/690	800 (31)	Power Bay	Aluminum	9.53 (0.375)
AC Input Flex Bus Bar Kit					
20-750-MACINP-F7	400/480/600/690	800 (31)	Power Bay	Flex Copper	1/0 AWG (1)
				Solid Aluminum	9.53 (0.375)
Circuit Breaker AC Output Bus Bar Kit					
20-750-MPCCB-F7M	400/480/600/690	800 (31)	Power Bay	Aluminum	9.53 (0.375)
AC Output Flex Bus Bar and Fuse Assembly Kits					
20-750-MACL2-CD-F7M	400/480	800 (31)	Power Bay	Copper	1/0 AWG (1)
20-750-MACL2-EF-F7M	600/690	800 (31)	Power Bay	Copper	1/0 AWG (1)
AC Motor Side Output Flex Bus Kit					
20-750-MSOF-F7	400/480/600/690	800 (31)	Power Bay	Flex Copper	1/0 AWG (1)
				Solid Aluminum	9.53 (0.375)
DC Output Bus Bar Terminal Kit					
20-750-MDCOT-F7M	DC	800 (31)	Power Bay	Aluminum	9.53 (0.375)
DC Output Flex Bus Kit (Drive)					
20-750-MDRFB-F7M	DC	800 (31)	Power Bay	Copper	1/0 AWG (1)
DC Output Flex Bus Bar and Fuse Assembly Kits (Bus Supply)					
20-750-MDCFB-CD-F7M	400/480	800 (31)	Power Bay	Flex Copper	1/0 AWG (1)
20-750-MDCFB-EF-F7M	600/690	800 (31)	Power Bay	Solid Aluminum	1/0 AWG (1)

(1) This measurement reflects a wire size.

AC Output Bus Bar and Fuse Assembly Kit Fuses (Frame 7)

The AC output bus bar and fuse assembly kits contain fuses that, when used with an LCL filter module (catalog numbers 20-750-ML4-*xnnnxnnn*), provide short circuit protection.

Bus Bar Assembly and Fuse Kit Cat. No.	LCL Filter	Voltage Rating	Bussman Fuse Number	Fuse Rating	Fuse Qty.
20-750-MACL2-CD-F7M	20-750-ML4-C585D617	400/480V	170M6463	690/700V (IEC/U.L.), 900 A (1)	3
20-750-MACL2-EF-F7M	20-750-ML4-E395F370	600/690V	170M6461	690/700V (IEC/U.L.), 700 A (2)	3

(1) Bussman Square Body - Flush End Contact -BKN/- Type K Indicator.

DC Output Flex Bus Bar and Fuse Assembly Kit Fuses (Frame 7)

The DC output bus bar and fuse assembly kits contain fuses that, when used with a power module (catalog numbers 20-750-MI4-*xnnnxnnn*), provide short circuit protection.

Bus Bar Assembly and Fuse Kit Cat. No.	Voltage Rating	Bussman Fuse Number	Fuse Rating	Fuse Qty.
20-750-MDCFB-CD-F7M	400/480V	170M6467	690/700V (IEC/U.L.), 1400 A (1)	2
20-750-MDCFB-EF-F7M	600/690V	170M6499	690/700V (IEC/U.L.), 1100 A (2)	2

(1) Bussman Square Body - Flush End Contact -BKN/- Type K Indicator.

Recommended Mounting Hardware

Use only the mounting hardware that is supplied or recommended by Rockwell Automation.

Power Cable Connections

ATTENTION: To guard against drive damage, do not connect power cables to bus bars and/or back panel and stab assemblies that are not identified in the Bus Bar and Back Panel and Stab Receptacle Assembly Kits Suitable for Power Connections table.

Power wire connections must be made directly to the bus bars or L-brackets (where applicable) by using barrel lugs and M10 hexagonal bolts and nuts. See UL Listed Barrel Lug Dimensions and Typical Lug Connection/L-Bracket Options for details. Connect power wiring to these bus bar and back panel and stab receptacle assembly kits only. For connection details, see the PowerFlex 755TM IP00 Open Type Kits Installation Instructions, publication 750-IN101. For grounding guidelines, see Wiring and Grounding Guidelines for Pulse Width Modulated (PWM) AC Drives, publication DRIVES-IN001.

Movable L-bracket connectors are available as kits (cat. no. 20-750-MLBRKT-F8M) to connect power cables to the extruded bus bar kits identified in the Bus Bar and Back Panel and Stab Receptacle Assembly Kits Suitable for Power Connections table. L-brackets must be a minimum of 51.0 mm (2.0 in.) from the side wall of an enclosure.

Kit Cat. No. 20-750-MLBRKT-F8M Contents

Item	Quantity
Movable L-bracket (aluminum)	3
M10 x 1.5 x 35 mm carriage bolt	6
Rectangular clamp washer	6
M10 x 13.3 mm hexagonal nut and washer	18
M10 x 1.5 x 40 mm hexagonal bolt	12
Flat round washer	12

Bus Bar and Back Panel and Stab Receptacle Assembly Kits Suitable for Power Connections

Cat. No.	Connector Type	Width *mm (in.)*	L-Bracket Compatible
AC Input Connection Kits			
20-750-MTEBUS2-3K0	Slotted bus bars	400 (16)	Yes (1)
20-750-MEMCC2-IPBB	Solid bus bars	800 (31)	No
20-750-MTEBUS1-4K7	Slotted bus bars	800 (31)	Yes (1)
20-750-MACBUS10-3K0	Slotted bus bars	1000 (39)	Yes (1)
20-750-MACBUS10-4K7	Slotted bus bars	1000 (39)	Yes (1)
AC Output Connection Kits			
20-750-MIR1-F8M	Back panel with stab receptacles	400 (16)	No
20-750-MTEBUS2-3K0	Slotted bus bars	400 (16)	Yes (1)
20-750-MIR1-F9M	Slotted bus bars	600 (24)	No
20-750-MIR2-F9M	Slotted bus bars	600 (24)	No
20-750-MADR1-F8M	Back panel with stab receptacles	800 (31)	No
20-750-MADR2-F8m	Back panel with stab receptacles	800 (31)	No
20-750-MEMCC2-F8	Solid bus bars	800 (31)	No
20-750-MEMCC2-F9	Solid bus bars	800 (31)	No
20-750-MEMCC2-F10	Solid bus bars	800 (31)	No
20-750-MIR1-F10M	Slotted bus bars	800 (31)	No
20-750-MIR2-F10M	Slotted bus bars	800 (31)	No
20-750-MTEBUS1-4K7	Slotted bus bars	800 (31)	Yes (1)
20-750-MNIR1	Back panel with stab receptacles	400 (16)	No
20-750-MNIR2	Back panel with stab receptacles	400 (16)	No
20-750-MNIR3	Back panel with stab receptacles	600 (24)	No
20-750-MNIR4	Back panel with stab receptacles	800 (31)	No

(1) L-brackets are permitted in all wire entry/exit bays and in frame 10...12 input bays.

Barrel Lugs

Barrel lugs that are used to make power cable connections to bus bars and back panel with stab receptacle assembly kit terminals must have these dimensions:

UL Listed Barrel Lug Dimensions

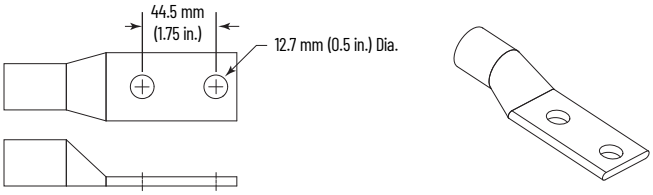

Either two- or one-hole lugs can be used.

Typical Lug Connection/L-Bracket Options

A maximum of four conductors with the appropriate lug per L-bracket are permitted for UL compliance.

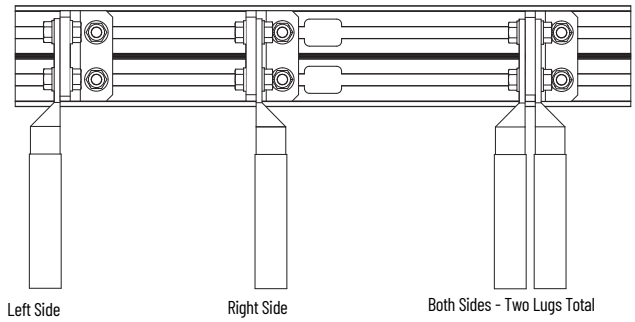

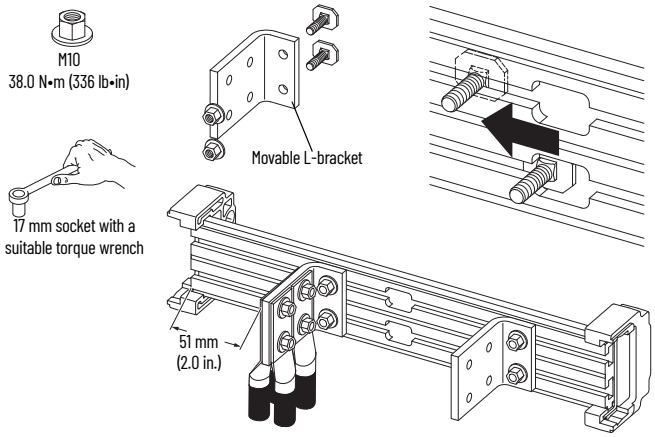

IMPORTANT Verify that the clamp fits squarely in the bus bar channel.

L-Bracket Approximate Dimensions [mm (in.)]

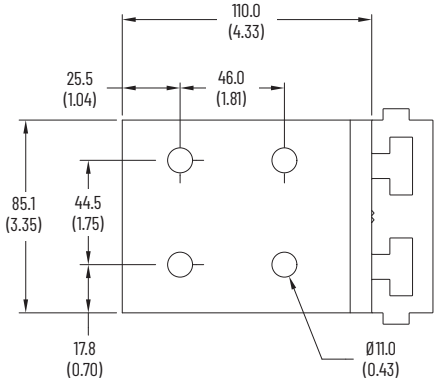

Use the vendor-recommended tooling to fasten crimp type terminals to cables. Torque mechanical type terminals according to vendor instructions. When using mechanical terminals, which may be large, be sure to maintain adequate spacing to adjacent wires, terminals, and other parts.

Grounding

The clamp kits that are listed in this table are used to secure round copper ground conductors to 9.5 mm (0.37 in.) thick, tin-plated aluminum, or tin-plated copper ground bus bars with a cross section of 483 mm^2 (0.75 $in.^2$).

Kit Catalog Number	Conductor Cross-sections(1)		Tightening Torque *N•m (lb•in)*
	ISO *(mm^2)*	**AWG/MCM**	
SK-RM-GRNDCLMP-16	2.5...16	14...6 AWG	3 (27)
SK-RM-GRNDCLMP-50	16...50	6...0 AWG	8 (71)
SK-RM-GRNDCLMP-75	35...75	2...00 AWG	12 (106)
SK-RM-GRNDCLMP-185	70...185	00 AWG ...350 MCM	15 (133)
20-750-MGNDSPL1	—	—	10.2 (90)

(1) Ground clamps are rated for only one conductor per clamp.

Ground Clamp

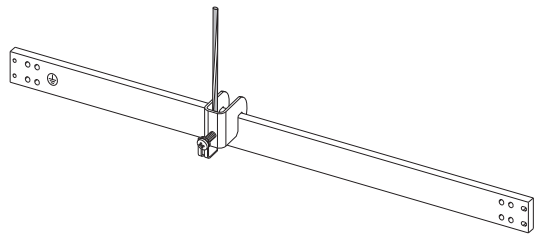

The final assembly Safety Ground-PE must be connected to system ground. Ground impedance must conform to the requirements of national and local industrial safety regulations and/or electrical codes. Periodically check the integrity of all ground connections. For more information on grounding requirements, see PowerFlex 755TM IP00 Open Type Kits Installation Instructions, publication 750-IN101, and Wiring and Grounding Guidelines for Pulse Width Modulated (PWM) AC Drives, publication DRIVES-IN001.

Resistor Bank Mounting Instructions (Frames 10...15)

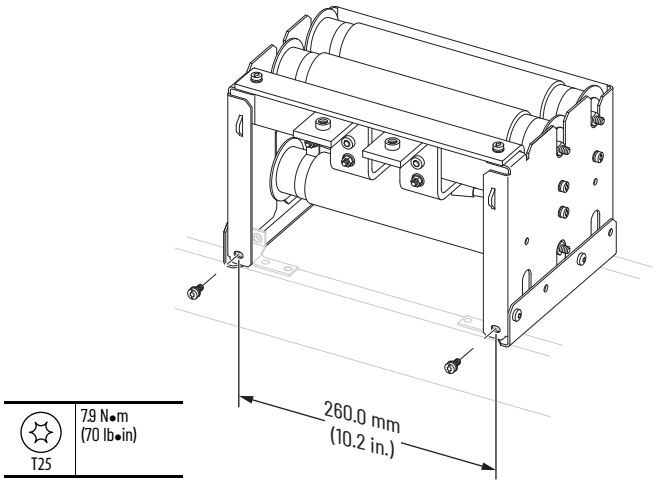

T25	7.9 N•m (70 lb•in)

Resistor Bank Mounting Instructions (Frame 7)

T25	6 N•m (53 lb•in)

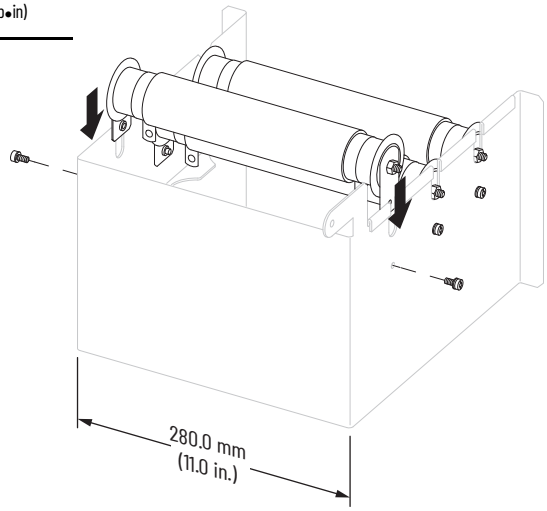

Approximate Weights

Approximate weights are provided for the following accessories, which weigh over 22.7 kg (50 lb). Use the appropriate lifting practices and equipment when handling these kits.

Cat. No.	Weight *kg (lb)*
AC Bus Bars	
20-750-MACBUS6-4K7	38.1 (84.0)
20-750-MACBUS8-4K7	57.6 (127.0)
20-750-MACBUS10-3K0	25.0 (55.0)
20-750-MACBUS10-4K7	66.2 (146.0)
AC Bus Bars Top Cable Exit/Entry	
20-750-MTEBUS1-4K7	53.0 (117.0)
AC Precharge Circuit Breaker Bus Bar Kits	
20-750-MCBBUS1-2K0	73.0 (160.0)
20-750-MCBBUS1-2K5	73.0 (160.0)
20-750-MCBBUS1-5K0	152.0 (335.0)
20-750-MCBBUS1-3K0	81.7 (180.0)
20-750-MCBBUS2-3K0	63.5 (140.0)
Control Transformers (NRS)	
20-750-MN-XMFR2-CD	26.5 (58.3)
20-750-MN-XMFR2-*n*	26.5 (58.3)

Cat. No.	Weight *kg (lb)*
AC Bus Bars for EMC C2 Filter	
20-750-MEMCC2-F8	30.5 (68.0)
20-750-MEMCC2-F9	23.2 (52.0)
20-750-MEMCC2-F10	21.6 (48.0)
20-750-MEMCC2-IPBB	34.0 (75.0)
DC Bus Bars	
20-750-MDCBUS3-4K7	25.0 (55.0)
20-750-MDCBUS4-4K7	35.0 (77.0)
20-750-MDCBUS6-4K7	25.4 (56.0)
20-750-MDCBUS8-4K7	39.5 (87.0)
20-750-MDCBUS10-4K7	48.0 (106.0)
Ventilation Kits	
20-750-MVENT2-F10M	60.8 (134.0)
20-750-MVENT2-F9M	33.1 (73.0)
20-750-MVENT2-F8M	30.8 (68.0)
20-750-MVENTC2-F11M	26.0 (57.0)
20-750-MVENTC1-F11M	25.0 (55.0)

Cat. No.	Weight *kg (lb)*
Back Panel w/Stab Receptacles and Bus Bars	
20-750-MIR1-F9M	29.5 (65.0)
20-750-MIR1-F10M	30.0 (66.0)
20-750-MIR2-F9M	29.5 (65.0)
20-750-MIR2-F10M	43.5 (96.0)
20-750-MACR1-F8M	28.2 (60.0)
20-750-MACR1-F9M	39.0 (86.0)
20-750-MADR1-F8M	32.0 (70.0)
20-750-MADR2-F8M	32.0 (70.0)
20-750-MACR2-F8M	30.0 (66.0)
20-750-MNIR1	20.0 (44.0)
20-750-MNIR2	25.0 (55.0)
20-750-MNIR2	35.0 (77.0)
20-750-MNIR3	50.0 (110.0)

Cat. No.	Weight *kg (lb)*
DC Voltage Balance / Wiring Bay Kits	
20-750-DCVBB-400	523.0 (1154.0)
20-750-DCVBB-400C	
20-750-DCVBB-400-FBR	
20-750-DCVBB-400C-FBR	
20-750-DCVBB-800	
20-750-DCVBB-800-FBR	
20-750-DCVBB-BS	
Wiring Bay Kits	
20-750-MN-WBAY*n*-400	126.0 (278.0)
20-750-MN-WBAY*n*-800	242.0 (534.0)

Notes:

Rockwell Automation Support

Use these resources to access support information.

Technical Support Center	Find help with how-to videos, FAQs, chat, user forums, and product notification updates.	rok.auto/support
Knowledgebase	Access Knowledgebase articles.	rok.auto/knowledgebase
Local Technical Support Phone Numbers	Locate the telephone number for your country.	rok.auto/phonesupport
Literature Library	Find installation instructions, manuals, brochures, and technical data publications.	rok.auto/literature
Product Compatibility and Download Center (PCDC)	Download firmware, associated files (such as AOP, EDS, and DTM), and access product release notes.	rok.auto/pcdc

Documentation Feedback

Your comments help us serve your documentation needs better. If you have any suggestions on how to improve our content, complete the form at rok.auto/docfeedback.

Waste Electrical and Electronic Equipment (WEEE)

At the end of life, this equipment should be collected separately from any unsorted municipal waste.

Rockwell Automation maintains current product environmental compliance information on its website at rok.auto/pec.

Your comments help us serve your documentation needs better. If you have any suggestions on how to improve our content, complete the form at rok.auto/docfeedback.
For technical support, visit rok.auto/support.

Rockwell Otomasyon Ticaret A.Ş. Kar Plaza İş Merkezi E Blok Kat:6 34752, İçerenköy, İstanbul, Tel: +90 (216) 5698400 EEE Yönetmeliğine Uygundur

Connect with us.

rockwellautomation.com — expanding **human possibility**™

AMERICAS: Rockwell Automation, 1201 South Second Street, Milwaukee, WI 53204-2496 USA, Tel: (1) 414.382.2000, Fax: (1) 414.382.4444
EUROPE/MIDDLE EAST/AFRICA: Rockwell Automation NV, Pegasus Park, De Kleetlaan 12a, 1831 Diegem, Belgium, Tel: (32) 2 663 0600, Fax: (32) 2 663 0640
ASIA PACIFIC: Rockwell Automation, Level 14, Core F, Cyberport 3, 100 Cyberport Road, Hong Kong, Tel: (852) 2887 4788, Fax: (852) 2508 1846

PN-628765

Publication 750-PC102F-EN-P - June 2021 | Supersedes Publication 750-PC102E-EN-P - June 2020