Product Information

Original Instructions

Allen-Bradley by ROCKWELL AUTOMATION

PowerFlex 755TM IP00 Open Type Kits

Catalog Numbers 20-750-MACP-CD-F*n*M, 20-750-MACP-*x*-F*n*M, 20-750-MCPOD*n*-F*n*M, 20-750-MDCL*n-xx*-F*n*M, 20-750-MDCP*n-xx*-F8M, 20-750-MFOC-*n*K*n*, 20-750-MI1-*xnnnxnnn*, 20-750-MI2-*xnnnxnnn*, 20-750-MI3-*xnnnxnnn*, 20-750-MI4-*xnnnxnnn*, 20-750-ML1-*xnnnxnnn*, 20-750-ML4-*xnnnxnnn*, 20-750-MN-DCLINK*n-xx*, 20-750-MN*n-xnnnxnnn*

ATTENTION: Read this document and the documents listed in the Additional Resources section about installation, configuration and operation of this equipment before you install, configure, operate or maintain this product. Users are required to familiarize themselves with installation and wiring instructions in addition to requirements of all applicable codes, laws, and standards.

Activities including installation, adjustments, putting into service, use, assembly, disassembly, and maintenance are required to be carried out by suitably trained personnel in accordance with applicable code of practice. If this equipment is used in a manner not specified by the manufacturer, the protection provided by the equipment may be impaired.

注意：在安装、配置、操作和维护本产品前，请阅读本文档以及 “ 其他资源 ” 部分列出的有关设备安装、配置和操作的相应文档。除了所有适用规范、法律和标准的相关要求之外，用户还必须熟悉安装和接线说明。

安装、调整、投运、使用、组装、拆卸和维护等各项操作必须由经过适当训练的专业人员按照适用的操作规范实施。

如果未按照制造商指定的方式使用该设备，则可能会损害设备提供的保护。

ATENCIÓN: Antes de instalar, configurar, poner en funcionamiento o realizar el mantenimiento de este producto, lea este documento y los documentos listados en la sección Recursos adicionales acerca de la instalación, configuración y operación de este equipo. Los usuarios deben familiarizarse con las instrucciones de instalación y cableado y con los requisitos de todos los códigos, leyes y estándares vigentes.

El personal debidamente capacitado debe realizar las actividades relacionadas a la instalación, ajustes, puesta en servicio, uso, ensamblaje, desensamblaje y mantenimiento de conformidad con el código de práctica aplicable. Si este equipo se usa de una manera no especificada por el fabricante, la protección provista por el equipo puede resultar afectada.

ATENÇÃO: Leia este e os demais documentos sobre instalação, configuração e operação do equipamento que estão na seção Recursos adicionais antes de instalar, configurar, operar ou manter este produto. Os usuários devem se familiarizar com as instruções de instalação e fiação além das especificações para todos os códigos, leis e normas aplicáveis.

É necessário que as atividades, incluindo instalação, ajustes, colocação em serviço, utilização, montagem, desmontagem e manutenção sejam realizadas por pessoal qualificado e especializado, de acordo com o código de prática aplicável.

Caso este equipamento seja utilizado de maneira não estabelecida pelo fabricante, a proteção fornecida pelo equipamento pode ficar prejudicada.

ВНИМАНИЕ: Перед тем как устанавливать, настраивать, эксплуатировать или обслуживать данное оборудование, прочитайте этот документ и документы, перечисленные в разделе «Дополнительные ресурсы». В этих документах изложены сведения об установке, настройке и эксплуатации данного оборудования. Пользователи обязаны ознакомиться с инструкциями по установке и прокладке соединений, а также с требованиями всех применимых норм, законов и стандартов.

Все действия, включая установку, наладку, ввод в эксплуатацию, использование, сборку, разборку и техническое обслуживание, должны выполняться обученным персоналом в соответствии с применимыми нормами и правилами.

Если оборудование используется не предусмотренным производителем образом, защита оборудования может быть нарушена.

注意 : 本製品を設置、構成、稼動または保守する前に、本書および本機器の設置、設定、操作についての参考資料の該当箇所に記載されている文書に目を通してください。ユーザは、すべての該当する条例、法律、規格の要件に加えて、設置および配線の手順に習熟している必要があります。

設置調整、運転の開始、使用、組立て、解体、保守を含む諸作業は、該当する実施規則に従って訓練を受けた適切な作業員が実行する必要があります。

本機器が製造メーカにより指定されていない方法で使用されている場合、機器により提供されている保護が損なわれる恐れがあります。

ACHTUNG: Lesen Sie dieses Dokument und die im Abschnitt „Weitere Informationen"aufgeführten Dokumente, die Informationen zu Installation, Konfiguration und Bedienung dieses Produkts enthalten, bevor Sie dieses Produkt installieren, konfigurieren, bedienen oder warten. Anwender müssen sich neben den Bestimmungen aller anwendbaren Vorschriften, Gesetze und Normen zusätzlich mit den Installations- und Verdrahtungsanweisungen vertraut machen.

Arbeiten im Rahmen der Installation, Anpassung, Inbetriebnahme, Verwendung, Montage, Demontage oder Instandhaltung dürfen nur durch ausreichend geschulte Mitarbeiter und in Übereinstimmung mit den anwendbaren Ausführungsvorschriften vorgenommen werden.

Wenn das Gerät in einer Weise verwendet wird, die vom Hersteller nicht vorgesehen ist, kann die Schutzfunktion beeinträchtigt sein.

ATTENTION : Lisez ce document et les documents listés dans la section Ressources complémentaires relatifs à l'installation, la configuration et le fonctionnement de cet équipement avant d'installer, configurer, utiliser ou entretenir ce produit. Les utilisateurs doivent se familiariser avec les instructions d'installation et de câblage en plus des exigences relatives aux codes, lois et normes en vigueur.

Les activités relatives à l'installation, le réglage, la mise en service, l'utilisation, l'assemblage, le démontage et l'entretien doivent être réalisées par des personnes formées selon le code de pratique en vigueur.

Si cet équipement est utilisé d'une façon qui n'a pas été définie par le fabricant, la protection fournie par l'équipement peut être compromise.

주의: 본 제품 설치, 설정, 작동 또는 유지 보수하기 전에 본 문서를 포함하여 설치, 설정 및 작동에 관한 참고 자료 섹션의 문서들을 반드시 읽고 숙지하십시오. 사용자는 모든 관련 규정, 법규 및 표준에서 요구하는 사항에 대해 반드시 설치 및 배선 지침을 숙지해야 합니다 .

설치 , 조정 , 가동 , 사용 , 조립 , 분해 , 유지보수 등 모든 작업은 관련 규정에 따라 적절한 교육을 받은 사용자를 통해서만 수행해야 합니다 .

본 장비를 제조사가 명시하지 않은 방법으로 사용하면 장비의 보호 기능이 손상될 수 있습니다 .

ATTENZIONE Prima di installare, configurare ed utilizzare il prodotto, o effettuare interventi di manutenzione su di esso, leggere il presente documento ed i documenti elencati nella sezione "Altre risorse", riguardanti l'installazione, la configurazione ed il funzionamento dell'apparecchiatura. Gli utenti devono leggere e comprendere le istruzioni di installazione e cablaggio, oltre ai requisiti previsti dalle leggi, codici e standard applicabili.

Le attività come installazione, regolazioni, utilizzo, assemblaggio, disassemblaggio e manutenzione devono essere svolte da personale adeguatamente addestrato, nel rispetto delle procedure previste.

Qualora l'apparecchio venga utilizzato con modalità diverse da quanto previsto dal produttore, la sua funzione di protezione potrebbe venire compromessa.

DİKKAT: Bu ürünün kurulumu, yapılandırılması, işletilmesi veya bakımı öncesinde bu dokümanı ve bu ekipmanın kurulumu, yapılandırılması ve işletimi ile ilgili İlave Kaynaklar bölümünde yer listelenmiş dokümanları okuyun. Kullanıcılar yürürlükteki tüm yönetmelikler, yasalar ve standartların gereksinimlerine ek olarak kurulum ve kablolama talimatlarını da öğrenmek zorundadır.

Kurulum, ayarlama, hizmete alma, kullanma, parçaları birleştirme, parçaları sökme ve bakım gibi aktiviteler sadece uygun eğitimleri almış kişiler tarafından yürürlükteki uygulama yönetmeliklerine uygun şekilde yapılabilir.

Bu ekipman üretici tarafından belirlenmiş amacın dışında kullanılırsa, ekipman tarafından sağlanan koruma bozulabilir.

注意事項：在安裝、設定、操作或維護本產品前，請先閱讀此文件以及列於 「其他資源」章節中有關安裝、設定與操作此設備的文件。使用者必須熟悉安裝和配線指示，並符合所有法規、法律和標準要求。

包括安裝、調整、交付使用、使用、組裝、拆卸和維護等動作都必須交由已經過適當訓練的人員進行，以符合適用的實作法規。

如果將設備用於非製造商指定的用途時，可能會造成設備所提供的保護功能受損。

POZOR: Než začnete instalovat, konfigurovat či provozovat tento výrobek nebo provádět jeho údržbu, přečtěte si tento dokument a dokumenty uvedené v části Dodatečné zdroje ohledně instalace, konfigurace a provozu tohoto zařízení. Uživatelé se musejí vedle požadavků všech relevantních vyhlášek, zákonů a norem nutně seznámit také s pokyny pro instalaci a elektrické zapojení.

Činnosti zahrnující instalaci, nastavení, uvedení do provozu, užívání, montáž, demontáž a údržbu musí vykonávat vhodně proškolený personál v souladu s příslušnými prováděcími předpisy.

Pokud se toto zařízení používá způsobem neodpovídajícím specifikaci výrobce, může být narušena ochrana, kterou toto zařízení poskytuje.

UWAGA: Przed instalacją, konfiguracją, użytkowaniem lub konserwacją tego produktu należy przeczytać niniejszy dokument oraz wszystkie dokumenty wymienione w sekcji Dodatkowe źródła omawiające instalację, konfigurację i procedury użytkowania tego urządzenia. Użytkownicy mają obowiązek zapoznać się z instrukcjami dotyczącymi instalacji oraz oprzewodowania, jak również z obowiązującymi kodeksami, prawem i normami.

Działania obejmujące instalację, regulację, przekazanie do użytkowania, użytkowanie, montaż, demontaż oraz konserwację muszą być wykonywane przez odpowiednio przeszkolony personel zgodnie z obowiązującym kodeksem postępowania.

Jeśli urządzenie jest użytkowane w sposób inny niż określony przez producenta, zabezpieczenie zapewniane przez urządzenie może zostać ograniczone.

OBS! Läs detta dokument samt dokumentet, som står listat i avsnittet Övriga resurser, om installation, konfigurering och drift av denna utrustning innan du installerar, konfigurerar eller börjar använda eller utföra underhållsarbete på produkten. Användare måste bekanta sig med instruktioner för installation och kabeldragning, förutom krav enligt gällande koder, lagar och standarder.

Åtgärder som installation, justering, service, användning, montering, demontering och underhållsarbete måste utföras av personal med lämplig utbildning enligt lämpligt bruk.

Om denna utrustning används på ett sätt som inte anges av tillverkaren kan det hända att utrustningens skyddsanordningar försätts ur funktion.

LET OP: Lees dit document en de documenten die genoemd worden in de paragraaf Aanvullende informatie over de installatie, configuratie en bediening van deze apparatuur voordat u dit product installeert, configureert, bediend of onderhoudt. Gebruikers moeten zich vertrouwd maken met de installatie en de bedradingsinstructies, naast de vereisten van alle toepasselijke regels, wetten en normen.

Activiteiten zoals het installeren, afstellen, in gebruik stellen, gebruiken, monteren, demonteren en het uitvoeren van onderhoud mogen uitsluitend worden uitgevoerd door hiervoor opgeleid personeel en in overeenstemming met de geldende praktijkregels.

Indien de apparatuur wordt gebruikt op een wijze die niet is gespecificeerd door de fabrikant, dan bestaat het gevaar dat de beveiliging van de apparatuur niet goed werkt.

Summary of Changes

This publication contains the following new or updated information. This list includes substantive updates only and is not intended to reflect all changes.

Topic	Page
Updated the Additional Resources table to include the new PowerFlex® 755TM Non-Regenerative Supply publication.	2
Added the NRS Modules table.	3
Added the DC Link/Fuse Modules (NRS) table.	3
Updated the Power Modules table in the Approximate Module Weights section to include the NRS power module weights.	4
Added the NRS module dimension drawing.	6

Topic (continued)	Page
Updated the Power Modules Required Fuses table to include fuses for the NRS power modules.	8
Added the DC Link/Fuse Assembly Kits Required Integral Fuses (NRS) table.	9
Added the new Non-Regenerative Supply NRS Module (Cat. No. 20-750-MIn-xnnnxnnn) power and ground connections.	11
Added the new NRS 1X DC Link/Fuse Assembly (Cat. No. 20-750-MDCL1-xx-FnM) power and ground connections.	14

Additional Resources

These documents contain additional information concerning related products from Rockwell Automation.

Resource	Description
PowerFlex 755TM IP00 Open Type Kits Technical Data, publication 750-TD101 PowerFlex 750-Series Products with TotalFORCE™ Control Technical Data, publication 750-TD100	Provides detailed information on: • Kit selection • Kit ratings and specifications • Option specifications
PowerFlex 750-Series Products with TotalFORCE Control Installation Instructions, publication 750-IN100	Provides the basic steps to install PowerFlex 755TL low harmonic drives, PowerFlex 755TR regenerative drives, and PowerFlex 755TM drive systems.
PowerFlex 755TM IP00 Open Type Kits Installation Instructions, publication 750-IN101	Provides instructions to install IP00 Open Type kits in user-supplied enclosures.
PowerFlex 750-Series Products with TotalFORCE Control Hardware Service Manual, publication 750-TG100	Provides detailed information on: • Preventive maintenance • Component testing • Hardware replacement procedures
PowerFlex 755TM Non-Regenerative Supply User Manual, publication 750-UM100	Provides detailed information on: • Receiving, handling, and storage • Installation steps • Setup and commissioning • Basic troubleshooting and maintenance
Wiring and Grounding Guidelines for Pulse Width Modulated (PWM) AC Drives, publication DRIVES-IN001	Provides basic information to properly wire and ground PWM AC drives.
Drives in Common Bus Configurations with PowerFlex 755TM Bus Supplies Application Techniques, publication DRIVES-AT005	Provides basic information to properly wire and ground the following products in common bus applications: • PowerFlex 755TM drive system for common bus solutions • PowerFlex 750-Series AC and DC Input Drives
Industry Installation Guidelines for Pulse Width Modulated (PWM) AC Drives, publication DRIVES-AT003	Provides basic information on enclosure systems, considerations to help protect against environmental contaminants, and power and grounding considerations for installing Pulse Width Modulated (PWM) AC drives.
Product Certifications website, rok.auto/certifications	Provides declarations of conformity, certificates, and other certification details.

You can view or download publications at rok.auto/literature.

Qualified Personnel

ATTENTION: Only qualified personnel familiar with adjustable frequency AC drives and associated machinery should plan or implement the installation, startup, and subsequent maintenance of the system. Failure to comply can result in personal injury and/or equipment damage.

Product Safety

ATTENTION: An incorrectly applied or installed drive can result in component damage or a reduction in product life. Wiring or application errors such as under sizing the motor, incorrect or inadequate AC supply, or excessive surrounding-air temperatures may result in malfunction of the system.

ATTENTION: This drive contains electrostatic discharge (ESD) sensitive parts and assemblies. Static control precautions are required when you install, test, service, or repair this assembly. Component damage may result if ESD control procedures are not followed. If you are not familiar with static control procedures, reference Guarding Against Electrostatic Damage, publication 8000-4.5.2 or any other applicable ESD protection handbook.

Accessible Parts

ATTENTION: To avoid an electric shock hazard, the installer must provide guarding to shield exposed electrical equipment against accidental contact. Exposed electrical components that carry potentially hazardous voltages are identified in the PowerFlex 750-Series Products with TotalFORCE Control Hardware Service Manual, publication 750-TG100. When installing this equipment, consider the design and placement of guarding to help prevent personal injury or equipment damage.

Equivalent Frame Size

PowerFlex 755T products are assigned frame size designators. The designations represent the various configurations of IP00 kits and hardware components that are packaged in a specific manner to obtain the full range of product offerings and power ratings. For an explanation of how frame sizes are determined for your product, see PowerFlex 755TM IP00 Open Type Kits Installation Instructions, publication 750-IN101.

Power Module Density

PowerFlex 755TM Non-Regenerative Supply (NRS) modules are assigned single density (1X) or dual density (2X) designators. "Single density" and "dual density" refers to the power output capability of the available NRS modules. Dual density modules support twice the power output of a single density module and standard PowerFlex 755TM power module with the same physical module size. See the PowerFlex 755TM Non-Regenerative Supply User Manual, 750-UM100, for details.

Module Identification

This section describes the modules by voltage, normal duty ratings, and catalog number. All equipment is rated IP00/Open Type and must be housed in an appropriate enclosure. See Industry Installation Guidelines for Pulse Width Modulated (PWM) AC Drives, publication DRIVES-AT003, for additional information about enclosures.

Power Modules (Frames 7...15)

Voltage	Amps *(normal duty)*	Cat. No.		
		No Filtering	With Paralleling Inductor	With Reflected Wave Filter
400	302	20-750-MI1-C302D302 20-750-MI4-C302D302	–	20-750-MI3-C302D302
480	302			
400	367	20-750-MI1-C367D361 20-750-MI4-C367D361	–	20-750-MI3-C367D361
480	361			
400	460	20-750-MI1-C460D430 20-750-MI4-C460D430	–	20-750-MI3-C460D430
480	430			
400	540	20-750-MI1-C540D505 20-750-MI4-C540D505	20-750-MI2-C540D505	20-750-MI3-C540D505
480	505			
400	585	20-750-MI1-C585D545	20-750-MI2-C585D545	20-750-MI3-C585D545
480	545			
400	600	20-750-MI4-C585D617	–	–
480	600			
400	650	20-750-MI1-C650D617	20-750-MI2-C650D617	20-750-MI3-C650D617
480	617			

Power Modules (Frames 7...15) (continued)

Voltage	Amps *(normal duty)*	Cat. No.		
		No Filtering	With Paralleling Inductor	With Reflected Wave Filter
400	750	20-750-MI1-C750D710	20-750-MI2-C750D710	20-750-MI3-C750D710
480	710			
400	770	20-750-MI1-C770D740	20-750-MI2-C770D740	20-750-MI3-C770D740
480	740			
600	192	20-750-MI4-E192F171	—	—
690	171			
600	242	20-750-MI1-E242F215 20-750-MI4-E242F215	—	20-750-MI3-E242F215
690	215			
600	295	20-750-MI1-E295F265 20-750-MI4-E295F265	20-750-MI2-E295F265	20-750-MI3-E295F265
690	265			
600	355	20-750-MI1-E355F330 20-750-MI4-E355F330	20-750-MI2-E355F330	20-750-MI3-E355F330
690	330			
600	395	20-750-MI1-E395F370 20-750-MI4-E395F370	20-750-MI2-E395F370	20-750-MI3-E395F370
690	370			
600	409	—	20-750-MI2E409F390	20-750-MI3-E409F390
690	390			
600	435	20-750-MI1-E435F415	20-750-MI2-E435F415	20-750-MI3-E435F415
690	415			
600	545	20-750-MI1-E545F505 20-750-MI1-E545F505C[1]	20-750-MI2-E545F505 20-750-MI2-E545F505C[1]	20-750-MI3-E545F505 20-750-MI3-E545F505C[1]
690	505			

(1) Copper

NRS Modules

Voltage	Input Amps AC *(normal duty)*	Output Amps DC *(normal duty)*	Cat. No.	
			With Bus Capacitors	No Bus Capacitors
400	739	887	20-750-MN1-C770D740	20-750-MN2-C770D740
480	681	817		
400	1406	1685	20-750-MN1-C1K4D1K3	20-750-MN2-C1K4D1K3
480	1256	1507		
600	501	602	20-750-MN1-E545F505	20-750-MN2-E545F505
690	501	602		
600	901	1082	20-750-MN1-E980F920	20-750-MN2-E980F920
690	901	1082		

LCL Filter Modules

Voltage	Amps *(normal duty)*	Cat. No.
400	540	20-750-ML1-C540D505
480	505	
400	600	20-750-ML4-C585D617
480	600	
400	770	20-750-ML1-C770D740
480	740	
400	1100	20-750-ML1-C1K1D1K0
480	1000	
400	1400	20-750-ML1-C1K4D1K3
480	1300	
600	395	20-750-ML1-E395F370 20-750-ML4-E395F370
690	370	
600	545	20-750-ML1-E545F505
690	505	
600	760	20-750-ML1-E760F735
690	735	
600	980	20-750-ML1-E980F920
690	920	

DC Precharge Modules

Voltage	Amps *(normal duty)*	No Filtering	With DC Common Mode Core
400	887	20-750-MDCP1-CD-F8M	20-750-MDCP2-CD-F8M
480	817		
600	602	20-750-MDCP1-EF-F8M	20-750-MDCP2-EF-F8M
690	556		

DC Link/Fuse Modules (Frames 8...15)

Voltage	Common Bus Inverter		Regenerative Drive/Bus Supply	
	Amps *(normal duty)*	Cat. No.	Amps *(normal duty)*	Cat. No.
400	887	20-750-MDCL1-CD-F8M	798	20-750-MDCL2-CD-F8M
480	817		735	20-750-MDCL3-CD-F8M[1] 20-750-MDCL1-CD-F7M
600	602	20-750-MDCL1-EF-F8M	542	20-750-MDCL2-EF-F8M
690	556		501	20-750-MDCL3-EF-F8M[1] 20-750-MDCL1-EF-F7M

(1) For right-to-left orientation.

DC Link/Fuse Modules (NRS)

Voltage	Single Density Power Module		Dual Density Power Module	
	Amps *(normal duty)*	Cat. No.	Amps *(normal duty)*	Cat. No.
400	887	20-750-MN-DCLINK1-CD	1685	20-750-MN-DCLINK2-CD
480	817		1507	
600	602	20-750-MN-DCLINK1-EF	1082	20-750-MN-DCLINK2-EF
690	602		1082	

AC Precharge Modules

Voltage	Amps *(normal duty)*	Cat. No.
400/480	720/663	20-750-MACP-CD-F8M
600	488	20-750-MACP-E-F8M
690	452	20-750-MACP-F-F8M
400/480	1368/1223	20-750-MACP-CD-F9M
600	878	20-750-MACP-E-F9M
690	823	20-750-MACP-F-F9M

Control Pods

Cat. No.	Equivalent Frame Size
20-750-MCP0D1-F7M[1]	7
20-750-MCP0D1-F8M[1]	8...15
20-750-MCP0D2-F7M[1]	7
20-750-MCP0D2-F8M[1]	8...10
20-750-MCP0D3-F7M	7
20-750-MCP0D3-F8M	8...15
20-750-MCP0D4-F7M	7
20-750-MCP0D4-F8M	8...10

(1) This IP00 Open Type kit Is not designated XT.

Environmental Specifications

This section describes environmental specifications. For complete product specifications and derating guidelines, see the PowerFlex 755TM IP00 Open Type Kits Technical Data, publication 750-TD101.

Module	Inlet Temperature (1)	Maximum Surrounding Temperature
Control pods	-20...+60 °C (-4...+140 °F)	65 °C (149 °F)
Power modules (frames 7...15)	-20...+40 °C (-4...+104 °F)	50 °C (122 °F)
	41...55 °C (106...131 °F)	65 °C (149 °F)(2)
NRS modules	-20...+55 °C (-4...+131 °F)	70 °C (158 °F)
LCL filter modules	-20...+40 °C (-4...+104 °F)	50 °C (122 °F)
	41...55 °C (106...131 °F)	65 °C (149 °F)(2)
DC precharge modules	-20...+55 °C (-4...+131 °F)	65 °C (149 °F)
	55...60 °C (131...140 °F)	65 °C (149 °F)(2)
AC precharge modules	-20...+40 °C (-4...+104 °F)	50 °C (122 °F)
	41...55 °C (106...131 °F)	65 °C (149 °F)(2)

(1) Inlet temperature represents the air immediately entering the IP00 open type module.
(2) Elevated temperature values are based on appropriate derating.

Category	Specification
Relative humidity	5...95% non-condensing
Storage temperature	-40...+70 °C (-40...+158 °F)
Pollution degree	PowerFlex 755TM products are designed to meet Pollution Degree 2 per UL61800-5-1.
Corrosive Atmosphere • ASTM B845-97 Method K Accelerated Test (30-day exposure) • Rockwell Automation proprietary accelerated corrosion test for industries with sources of gaseous sulfur compounds, including tire and rubber	Severity Level GX per ANSI/ISA 71.03-2013, Airborne contaminants-gases. Severity level GX is defined as up to 2100 angstroms of film growth per 30 days of copper or silver reactivity. Severity Level CX per IEC 60721-3-3: 2019, Chemically Active Substances. For the product to meet the corrosive atmosphere rating, these conditions must be met: • Protective covers must remain installed in unused connectors during storage and operation. • The product or kit must be stored in the original packaging.

IP00 Open Type Kits with XT Designation

All PowerFlex 755TM IP00 Open Type kits with corrosive gas protection (XT) meet the corrosive atmosphere specification as defined by Rockwell Automation (see Corrosive Atmosphere in the Environmental Specifications section on page 4).

The IP00 Open Type kits that are listed in this table do not meet the corrosive atmosphere specification. Do not install these kits in a PowerFlex 755T product installed in a corrosive environment. The kit catalog number and series are contained on the kit package label and/or nameplate.

Catalog Number	Module	Series
20-750-MCP0D1-FnM, 20-750-MCP0D2-FnM	Control pods	All
20-750-MI1-*xnnnxnnn*, 20-750-MI2-*xnnnxnnn*, 20-750-MI3-*xnnnxnnn*, 20-750-MI4-*xnnnxnnn*	Power modules	A
20-750-ML1-*xnnnxnnn*, 20-750-ML4-*xnnnxnnn*	LCL filter modules	
20-750-MDCP1-*xx*-F8M	DC precharge modules	
20-750-MACP-*x*-F*n*M	AC precharge modules	

IMPORTANT For IP00 Open Type kits installed in an environment that contains volatile, conductive, or corrosive liquid, gases, and/or solids these conditions must be met:
- Kits must be installed in enclosures that provide for protection against solid and liquid ingress (IP21 / Type 1 or IP54 / Type 12)
- Kits must have corrosive gas protection (XT)
- Protective covers must be installed on unused connections

For IP00 Open Type kits that are stored before installation these conditions must be met:
- Kits must remain in the original packaging until the time of installation
- Kits must be stored in an area where exposure to corrosive atmosphere and humidity is minimized
- Kits must not be stored in environments that contain conductive pollutants

See the Industry Installation Guidelines for Pulse Width Modulated (PWM) AC Drives, publication DRIVES-AT003 for more information on environmental considerations.

Approximate Module Weights

This section lists the approximate maximum weights.

Power Modules

Power Module	Cat. No.	Max Module Weight, *kg (lb)*	Max Weight with Packaging, *kg (lb)*
Power module	20-750-MI1-*xnnnxnnn*	141.5 (312.0)	192.3 (424.0)
Power module with a paralleling inductor	20-750-MI2-*xnnnxnnn*		
Power module with a reflected wave filter	20-750-MI3-*xnnnxnnn*		
Power module	20-750-MI4-*xnnnxnnn*	113.4 (250.0)	164.2 (362.0)
NRS module (1X - with bus capacitors)	20-750-MN1-C770D740, 20-750-MN1-E545F505	134 (295)	157 (345)
NRS module (1X - no bus capacitors)	20-750-MN2-C770D740, 20-750-MN2-E545F505	125 (275)	147 (325)
NRS module (2X - with bus capacitors)	20-750-MN1-C1K4D1K3, 20-750-MN1-E980F920	204 (450)	227 (500)
NRS module (2X - no bus capacitors)	20-750-MN2-C1K4D1K3, 20-750-MN2-E980F920	186 (410)	209 (460)

LCL Filter Modules

Cat. No.	Max Module Weight, *kg (lb)*	Max Weight with Packaging, *kg (lb)*
20-750-ML1-C540D505	213.2 (470)	264 (582)
20-750-ML1-C770D740		
20-750-ML1-E395F370		
20-750-ML1-E545F505		
20-750-ML1-C1K1D1K0	322.1 (710)	372.9 (822)
20-750-ML1-C1K4D1K3		
20-750-ML1-E760F735		
20-750-ML1-E980F920		
20-750-ML4-C585D617	175 (385)	226 (497)
20-750-ML4-E395F370		

Precharge Modules

Unit	Frame Size	Max Module Weight, *kg (lb)*	Max Weight with Packaging, *kg (lb)*
AC precharge (1)	8	40.8 (90)	71.2 (157)
AC precharge (1)	9	130.2 (287)	160.6 (354)
DC precharge (2)	8...15	40.8 (90)	44.0 (97)

(1) Includes AC precharge module catalog numbers: 20-750-MACP-*xx*-*xnx*.
(2) Includes DC precharge module catalog numbers: 20-750-MDCP1-xx-*xnx* and 20-750-MDCP2-*xx*-*xnx*.

Lifting

ATTENTION: Follow these precautions to guard against possible personal injury and/or equipment damage when preparing to lift, transport and install power, LCL filter, NRS, AC precharge, and DC precharge modules:
- Inspect all lifting hardware for proper attachment before lifting the module or enclosure.
- Do not allow any part of the module, enclosure, or lifting mechanism to make contact with electrically charged conductors or components.
- Do not subject the module or enclosure to high rates of acceleration or deceleration while transporting to the installation location or while lifting.
- Do not allow personnel or their limbs directly underneath the module or enclosure when it is lifted and installed.

Lift the Power, LCL Filter, and NRS Modules

For detailed instructions on how to unpack and lift the power, LCL filter, and NRS modules out of the shipping crates, see this publication that shipped with the modules:

- PowerFlex 755TM Power and Filter Modules Unpacking and Lifting Instructions, publication 750-IN104

Lift the AC and DC Precharge Modules

For detailed instructions on how to unpack and lift the AC and DC precharge modules out of the shipping crates, see these publications that shipped with the modules:

- PowerFlex 755TM AC Precharge Modules Unpacking and Lifting Instructions, publication 750-IN102
- PowerFlex 755TM DC Precharge Modules Unpacking and Lifting Instructions, publication 750-IN103

Recommended Equipment and Accessories

Equipment is available that is designed to help you safely handle major components. The following equipment is recommended:

- PowerFlex 750-Series Service Cart, catalog number 20-750-MCART1, publication 750-IN105
- PowerFlex 750TM Power and Filter Module Storage Hardware, catalog number 20-750-MINV-ATIP, publication 750-IN106
- PowerFlex 755T DCPC Module Lift, catalog number 20-750-MCART2, publication 750-IN107
- PowerFlex 755T Module Service Ramp, catalog number 20-750-MRAMP1, publication 750-IN108

Module Service Cart

ATTENTION: Power, LCL filter and NRS modules have a high center of gravity and a tip-over hazard exists. To guard against death, serious personal injury, or equipment damage, do not subject the module to high rates of acceleration or deceleration while transporting. Do not push or pull above the points indicated on the module.

Use the module service cart (20-750-MCART1) to safely transport the power, LCL filter, and NRS modules. See the PowerFlex 750-Series Service Cart Instructions, publication 750-IN105, for information on how to assemble and use the service cart. Use the DC precharge module lift (20-750-MCART2) to safely lift the DC precharge module. See the PowerFlex 755T DC Precharge Module Lift Instructions, publication 750-IN107, for information on how to use the module lift.

Module Storage Hardware

Use the module storage hardware (20-750-MINV-ATIP) to stabilize these modules. See the PowerFlex 755TM Power and Filter Module Storage Hardware Instructions, publication 750-IN106.

Approximate Dimensions

Frame 8 AC Precharge Module (Cat. No. 20-750-MACP-*xx*-F8M), *mm (in.)*

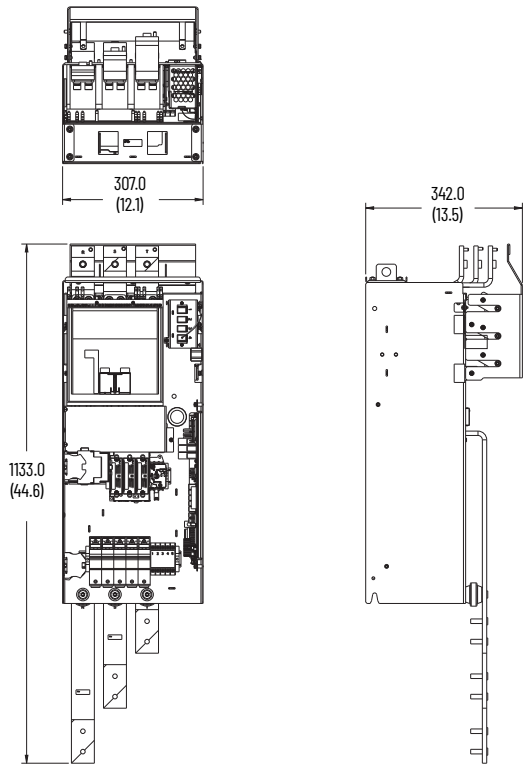

Frame 9 AC Precharge Module (Cat. No. 20-750-MACP-*xx*-F9M), *mm (in.)*

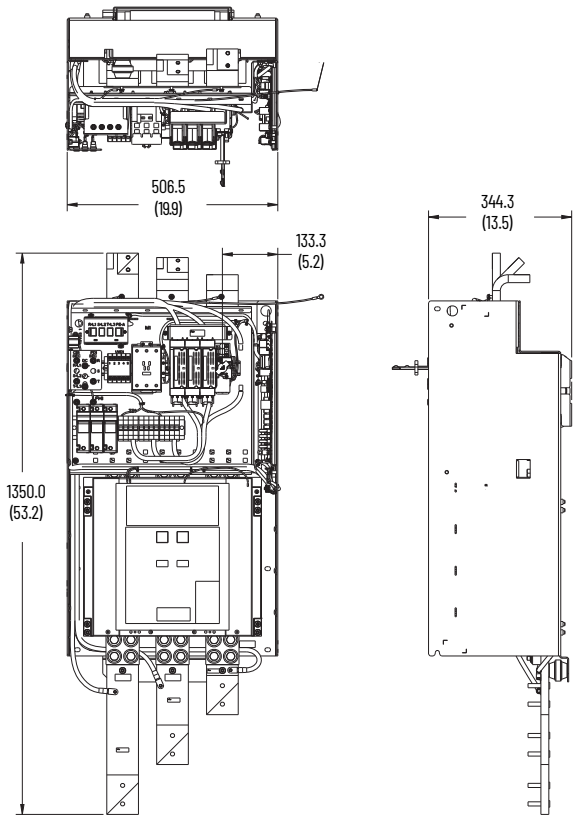

DC Precharge Module (Cat. No. 20-750-MDCP*n-xx*-F8M), *mm (in.)*

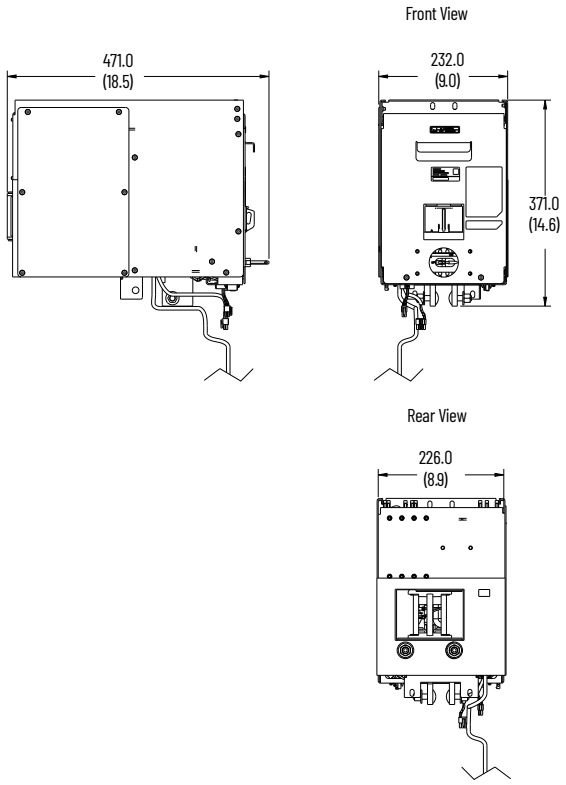

Power Module (Cat. No. 20-750-MI4-*xnnnxnnn*), *mm (in.)*

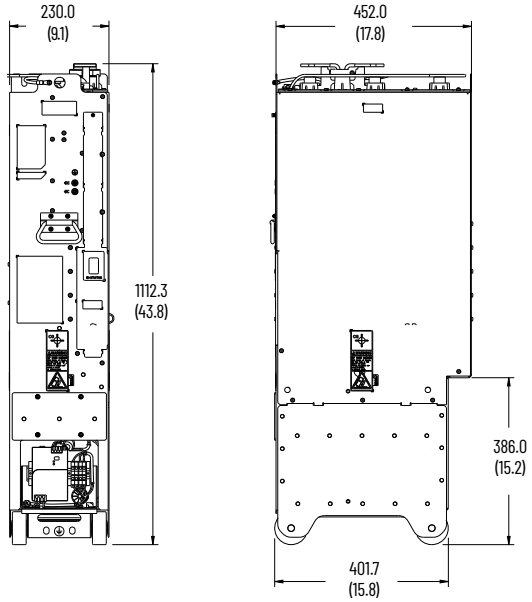

Power Module (Cat. No. 20-750-MI1-*xnnnxnnn*, 20-750-MI2-*xnnnxnnn*, 20-750-MI3-*xnnnxnnn*), *mm (in.)*

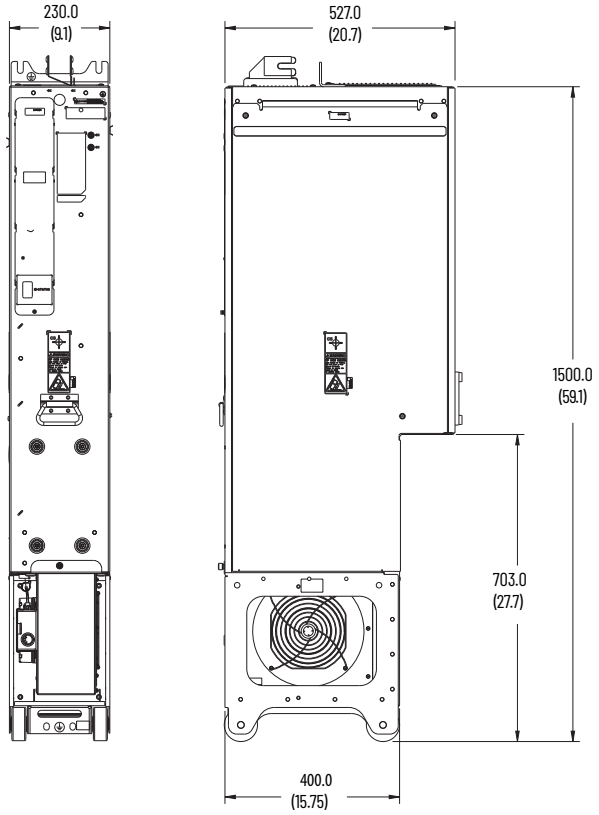

NRS Module (Cat. No. 20-750-MIn-xnnnxnnn), mm (in.)

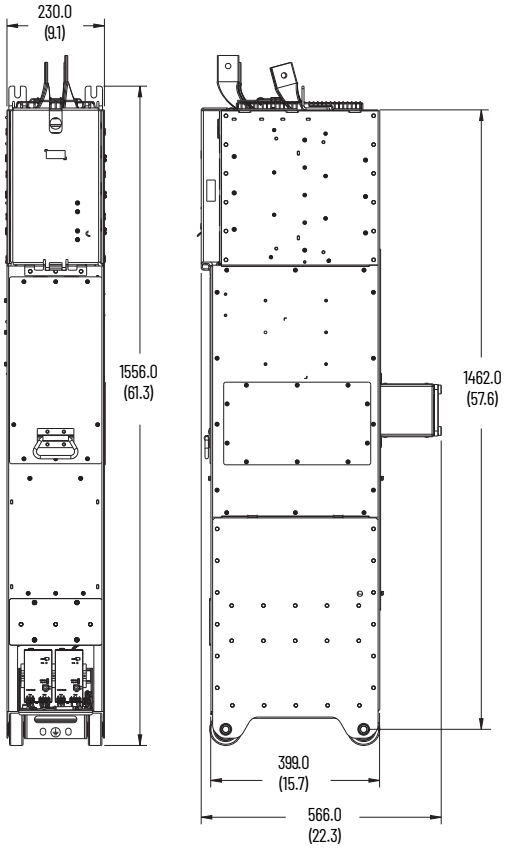

LCL Filter Module (Cat. No. 20-750-ML1-*xnnnxnnn*), *mm (in.)*

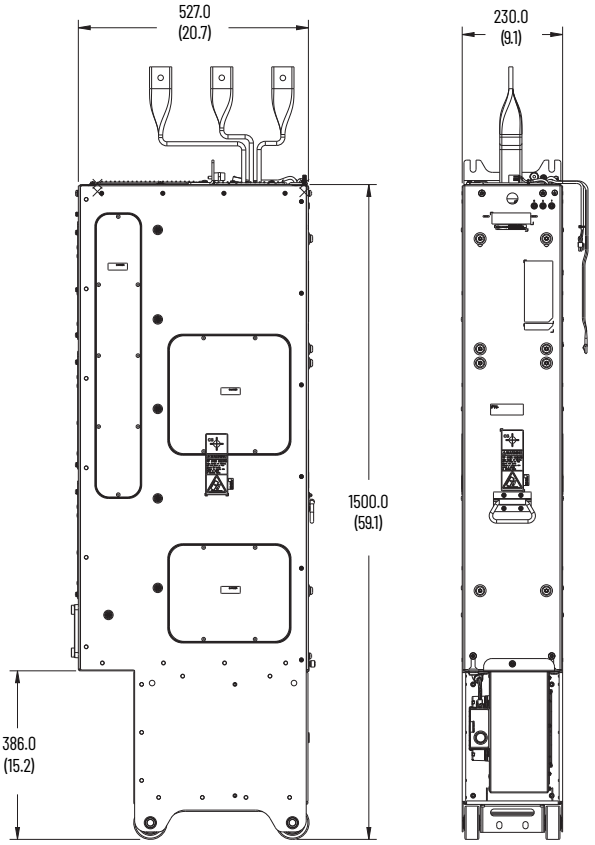

LCL Filter Module (Cat. No. 20-750-ML4-*xnnnxnnn*), *mm (in.)*

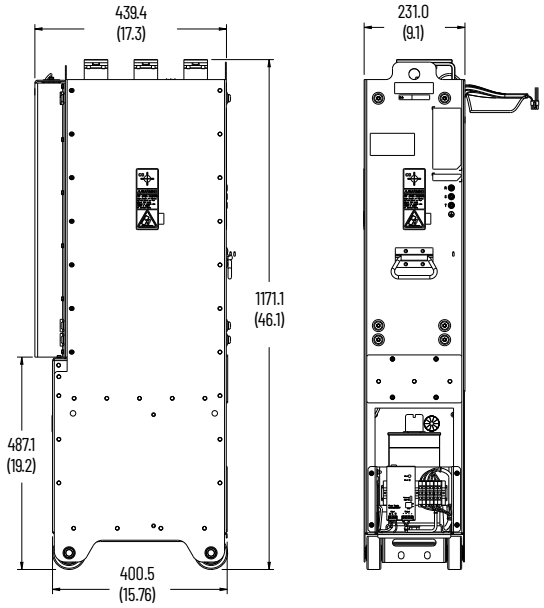

Frame 8...15 Control Pod (Cat. No. 20-750-MCPOD*n*-F8M), *mm (in.)*

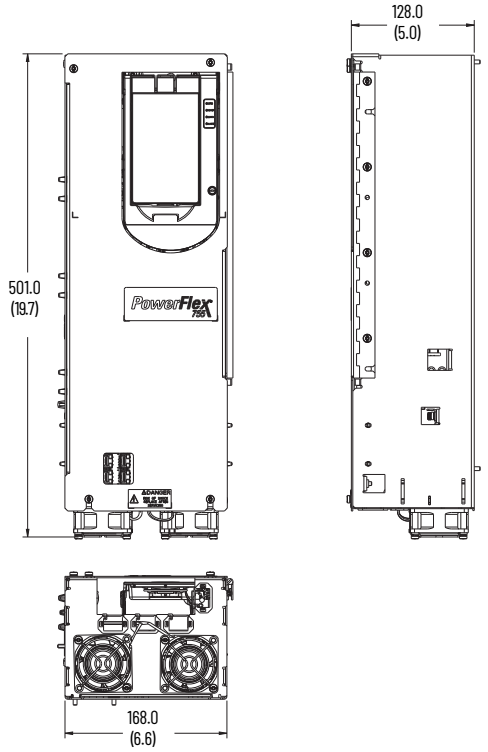

Frame 7 Control Pod (Cat. No. 20-750-MCPOD*n*-F7M), *mm (in.)*

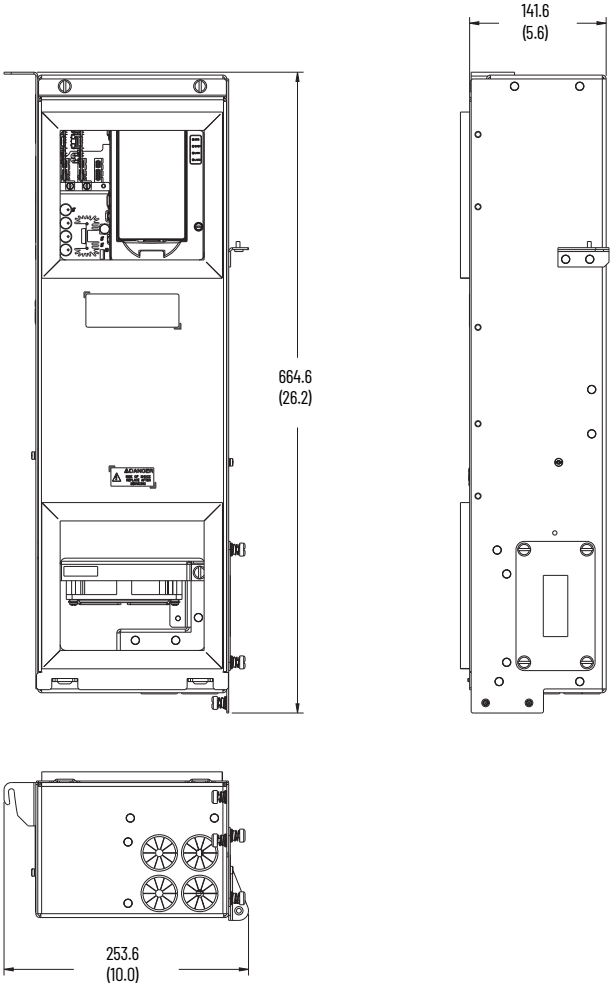

Minimum Mounting Clearances

Follow these guidelines when mounting the control pod. The control pod must be mounted in a vertical orientation as shown and must make full contact with the mounting or mating surface.

- Do not use standoffs or spacers.
- The control pod is rated IP00 / UL Open Type.

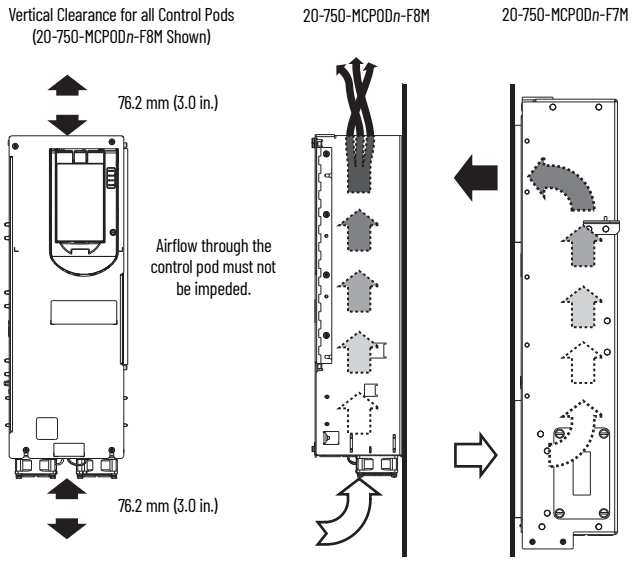

Recommended Mounting Hardware

Use only the mounting hardware that is supplied or recommended by Rockwell Automation.

Leakage Current

These products produce leakage current in the protective earthing conductor that exceeds 3.5 mA AC and/or 10 mA DC. The minimum size of the protective earthing (grounding) conductor that is used in the application must comply with local safety regulations for high protective earthing conductor current equipment.

Overcurrent Protective Devices

- 24V DC control logic circuits must be fed from a Class 2 or Class 1 power-limited supply.
- 240V AC control power must be protected in compliance with national and local industrial safety regulations and/or electrical codes.

Device Power Consumption

Device	Cat. No.	240V AC Input, *Amps*	24V DC Supply, *Amps*	24V DC Aux. Supply(2), *Amps*
Power module	20-750-MI*n*-*xnnnxnnn*	2.9	—	1.4
NRS module	20-750-MN*n*-C770D740, 20-750-MN*n*-E545F505	1.1	—	—
	20-750-MN*n*-C1K4D1K3, 20-750-MN*n*-E980F920	2.0	—	—
LCL filter module	20-750-ML*n*-*xnnnxnnn*	2.9	—	0.9(1)
AC precharge module	20-750-MACP-*xx*-*xnx*	2.0	1.1	1.1
DC precharge modules	20-750-MDCP1-*xx*-*xnx*	2.0	—	0.5(2)
Torque accuracy module	20-750-MTAM1-*xx*	0.2(1)	—	0.2(3)
AC precharge control board	20-750-MACPC1-*xx*	2.0	1.1	1.1
Control pod assembly	20-750-MCPOD*n*-F7M	—	7.2	7.2
	20-750-MCPOD*n*-F8M	—	5.2	5.2

(1) This control power source is provided by the connected power module.
(2) This control power source is optional. Provides auxiliary power to the control pod control circuits when main power has been removed.
(3) This value is the current load for either a 240V AC or 24V DC auxiliary control power source. Only one control power source is required.

Multiple Disconnects

The modules identified in the preceding Device Power Consumption table can be fed by multiple power sources. For example, 480V AC line power and 240V AC control power.

Final assemblies that are supplied by multiple power sources, must be marked in compliance with national and local industrial safety regulations and/or electrical codes.

Motor Overload Protection

Electronic motor overload protection	Class 10 motor overload protection according to NEC article 430 and motor over-temperature protection according to NEC article 430.126 (A)(2). UL61800-5-1 File E59272.

Short Circuit Current Rating

Rating	Description
Maximum short circuit current rating	Suitable for use on a circuit capable of delivering not more than 100 kA rms symmetrical amperes, up to 600V maximum and 65 kA rms symmetrical amperes at 690V maximum.
Actual short circuit current rating	May be further limited by AIC rating of customer supplied branch circuit fuse/circuit breaker.

Branch Circuit Short Circuit Protection

- Branch circuit protection must be provided in accordance with the National Electric Code (NEC) and any additional local codes, or the equivalent.
- Branch circuit protection for customer supplied 240/120V AC must have an AIC rating that is equal to or greater than the product short circuit current rating.

Fuse Ratings

The tables on the following pages provide AC Line and DC Bus fuses (with blown fuse indicators) that are required to provide drive short circuit protection.

Power Modules Required Fuses

Cat. No.	Fuse Size	
	Amps/Leg	1/Leg
20-750-MI1-C*nnn*D*nnn*	1400	170M6467
20-750-MI2-C*nnn*D*nnn*		
20-750-MI3-C*nnn*D*nnn*		
20-750-MI1-E*nnn*F*nnn*	1100	170M6499
20-750-MI2-E*nnn*F*nnn*		
20-750-MI3-E*nnn*F*nnn*		
20-750-MI4-C*nnn*D*nnn*	1400	170M6467
20-750-MI4-E*nnn*F*nnn*	1100	170M6499
20-750-MNn-C770D740	1250	170M6466
20-750-MNn-C1K4D1K3	900	170M6463
20-750-MNn-E545F505	2000	170M6471
20-750-MNn-E980F920	1400	170M6467

LCL Filter Modules Required Fuses

Cat. No.	Fuse Size	
	Amps/Leg	1/Leg
20-750-ML1-C540D505	900	170M6463
20-750-ML1-C770D740	1250	170M6466
20-750-ML1-C1K1D1K0	1800	170M6470
20-750-ML1-C1K4D1K3	2000	170M6471
20-750-ML1-E395F370	700	170M6461
20-750-ML1-E545F505	900	170M6463
20-750-ML1-E760F735	1250	170M6466
20-750-ML1-E980F920	1600	170M6469
20-750-ML4-C585D617	900	170M6463
20-750-ML4-E395F370	700	170M6461

DC Precharge Module Required Integral Fuses

Cat. No.	Voltage Class	Fuse Size	
		Amps/Leg	1/Leg
20-750-MDCP1-CD-F8M	540	1400	170M6467
20-750-MDCP2-CD-F8M	540		
20-750-MDCP1-EF-F8M	810	1100	170M6499
20-750-MDCP2-EF-F8M	810		

DC Link/Fuse Assembly Kits Required Integral Fuses

Catalog Number	Fuse Size	
	Amps/Leg	1/Leg
20-750-MDCL1-CD-F7M	1400	170M6467
20-750-MDCL1-CD-F8M		
20-750-MDCL2-CD-F8M		
20-750-MDCL1-EF-F7M	1100	170M6499
20-750-MDCL1-EF-F8M		
20-750-MDCL2-EF-F8M		

DC Link/Fuse Assembly Kits Required Integral Fuses (NRS)

Catalog Number	Fuse Size		
	Amps/Leg	1/Leg (2 Legs)	1/Leg (4 Legs)
20-750-MN-DCLINK1-CD	1400	170M6467	—
20-750-MN-DCLINK2-CD		—	170M6467
20-750-MN-DCLINK1-EF	1100	170M6499	—
20-750-MN-DCLINK2-EF		—	170M6499

Additional Protection From Field Installed Kits

This section includes fuse ratings for field installed kits.

Power and LCL Filter Module Fan Assembly Fuses

The power and LCL filter modules (20-750-MI1, 20-750-MI2, 20-750-MI3, 20-750-ML1) include a fan assembly that contains this fuse:

- 250V 3.5 A, Cartridge Style, Time Delay

AC Precharge Module Fuses

The AC precharge modules contain a fused disconnect (FD1) switch with the fuses listed in this table.

AC Precharge Module Cat. No.	Voltage Rating	Fuse FD1	Qty.
20-750-MACP-CD-F8M	400V/480V	Class J TD - 600V, 30 A	3
20-750-MACP-E-F8M	600V	Class J TD - 600V, 30 A	3
20-750-MACP-F-F8M	690V	Class gG - 690V 32 A	3
20-750-MACP-CD-F9M	400V/480V	Class J TD - 600V 70 A	3
20-750-MACP-E-F9M	600V	Class J TD - 600V 60 A	3
20-750-MACP-F-F9M	690V	Class gG - 690V 63 A	3

The AC precharge modules contain an AC precharge control circuit board protection fuse (FH1) listed in this table.

AC Precharge Module Cat. No.	Voltage Rating	Fuse FH1	Qty.
20-750-MACP-*xx*-F8M	400V/480V600V	Class J TD 600V 1A	3
20-750-MACP-*xx*-F9M	690V	Class gG - 690V AC 1A 14 X 51 mm	3

The AC precharge modules contain 240V control power protection fuses (FH4...FH7) listed in this table.

AC Precharge Module Cat. No.	Voltage Rating	Enclosure Rating	Fuse FH4...FH7	Qty.
20-750-MACP-CD-F8M	400V/480V	IP21	Class J TD 600V 20 A	2
20-750-MACP-E-F8M	600V		Class J TD 600V 20 A	
20-750-MACP-F-F8M	690V		Class Am 690V 16 A Cartg Link	
20-750-MACP-CD-F8M	400V/480V	IP54	Class J TD 30 A 600V	2
20-750-MACP-E-F8M	600V		Class J TD 30 A 600V	
20-750-MACP-F-F8M	690V		Class Am 690V 20 A Cartg Link	
20-750-MACP-CD-F9M	400V/480V	IP21	Class J TD 30 A 600V	2
20-750-MACP-E-F9M	600V		Class J TD 30 A 600V	
20-750-MACP-F-F9M	690V		Class Am 690V 20 A Cartg Link	
20-750-MACP-CD-F9M	400V/480V	IP54	Class J TD 30 A 600V	2
20-750-MACP-E-F9M	600V		Class J TD 30 A 600V	
20-750-MACP-F-F9M	690V		Class Am 690V 20 A Cartg Link	

Connect Input and Output Power Wires

Power wiring is connected to the input and out power terminals using the applicable bus bar assemblies, back panel and stab assemblies, or fabricated bus bars using material with the following specifications:

- Material: CDA 110 copper
- Minimum cross section: 80.7mm^2 (0.125 in.^{2}) per each 100 A of drive rating

Power Cable Types Acceptable for 200...600 Volt Installations

ATTENTION: National Codes and standards (NEC, BSI and so forth) and local codes outline provisions for safely installing electrical equipment. Installation must comply with specifications regarding wire types, conductor sizes, branch circuit protection and disconnect devices. Failure to do so may result in personal injury and/or equipment damage.

Power Wire Recommendations

Type		Description	Min. Insulation Rating
Power(1)(2)(3)	Standard	Three tinned copper conductors with XLPE insulation. Maximum 500 MCM conductors. Copper braid/aluminum foil combination shield and tinned copper drain wire, three drain wires per cable assembly. PVC jacket.	600V 75 °C (167 °F)

(1) Control and signal wires should be separated from power wires by at least 0.3 meters (1 foot).
(2) The use of shielded wire for AC input power may not be necessary but is always recommended.
(3) See Wiring and Grounding Guidelines for Pulse Width Modulated (PWM) AC Drives, publication DRIVES-IN001

ATTENTION: To guard against damage, do not connect power cables directly to the input or output terminals on the power module, LCL filter, AC or DC precharge modules. See Leakage Current on page 8.

Ground Connections

The final assembly Safety Ground-PE must be connected to system ground. Ground impedance must conform to the requirements of national and local industrial safety regulations and/or electrical codes. Periodically check the integrity of all ground connections. For more information on grounding requirements, see these publications:

- PowerFlex 755TM IP00 Open Type Kits Installation Instructions, publication 750-IN101
- Wiring and Grounding Guidelines for Pulse Width Modulated (PWM) AC Drives, publication DRIVES-IN001

Module Power and Ground Connections

This section shows the power, ground, and control connections for the modules.

IMPORTANT Do not remove protective covers from wire harnesses, circuit board connectors, terminal blocks, and fiber-optic ports unless used at the time of installation. Removing a protective cover can lead to contamination.

Power Module (Cat. No. 20-750-MI1-*xnnnxnnn*, 20-750-MI2-*xnnnxnnn*, 20-750-MI3-*xnnnxnnn*)

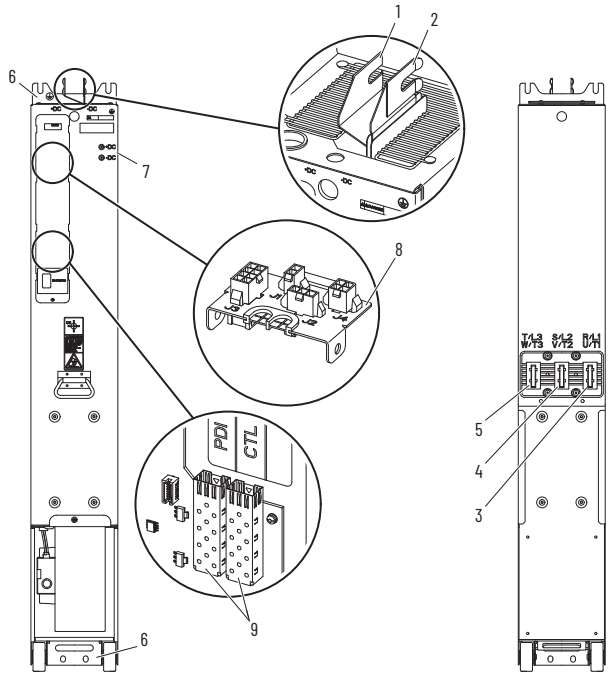

Front View Protective connection covers not shown for clarity only. Rear View

Item	Connection	Description
1	+DC	+DC bus connection from DC precharge module or DC/link bus bar and fuses.
2	-DC	-DC bus connection from DC precharge module or DC/link bus bar and fuses.
3	R/L1, U/T1	AC bus connection from the stab receptacle assembly.
4	S/L2, V/T2	AC bus connection from the stab receptacle assembly.
5	T/L3, W/T3	AC bus connection from the stab receptacle assembly.
6	GND	PE chassis ground connection.
7	+DC, -DC	+DC and -DC bus test points.
8	J1	DC fuse condition signal from connector P1 on the DC/link fuses.
	J2	DC bus conditioner signals from connector P2 on the DC bus conditioner (when present), or thermal switch signal in an exit wire bay (if used).(1)
	J3	24V DC signal from connector P3 on the DC precharge module (when present).
	J4	240V AC and optional 24V DC control power supply from connector P4 on the DC precharge module (when present) or customer-supplied source.(2)
9	CTRL	Fiber optic connection from L*x* or M*x* on the fiber transceiver board in the control pod.
	PDI	Fiber optic connection from an LCL filter module or DC precharge module (when present).

(1) A thermal switch must be connected to the motor side inverter closet to the wire exit bay only.
(2) To protect the DC bus capacitor balance resistors in a motor side inverter power module, the customer-supplied 240V AC control power must be energized and all power module blowers must be functioning before DC bus voltage is applied to a PowerFlex 755TM common bus inverter system.

Power Module (Cat. No. 20-750-MI4-*xnnnxnnn*)

IMPORTANT Do not remove protective covers from wire harnesses, circuit board connectors, terminal blocks, and fiber-optic ports unless used at the time of installation. Removing a protective cover can lead to contamination.

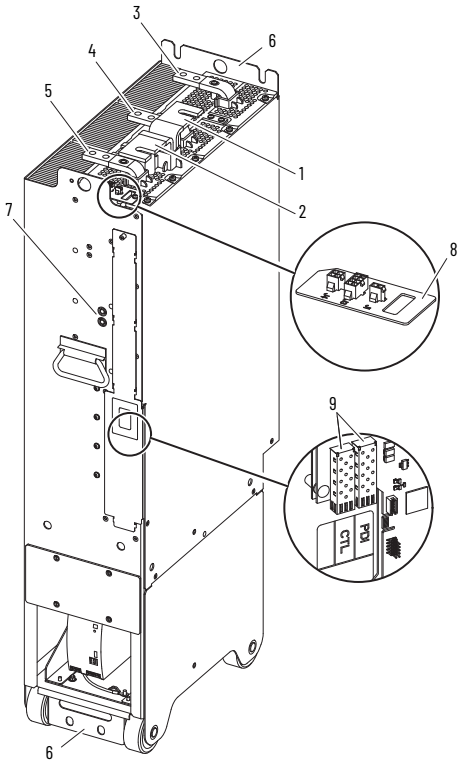

Protective connection covers not shown for clarity only.

Item	Connection	Description
1	+DC	+DC bus connection to/from DC/link bus bar and fuse.
2	-DC	-DC bus connection to/from DC/link bus bar and fuse.
3	R/L1, U/T1	AC bus connection from LCL filter module or to AC output bus bars, respectively.
4	S/L2, V/T2	AC bus connection from LCL filter module or to AC output bus bars, respectively.
5	T/L3, W/T3	AC bus connection from LCL filter module or to AC output bus bars, respectively.
6	GND	PE chassis ground connection.
7	+DC, -DC	+DC and -DC bus test points.
8	J1	DC fuse condition signal from connector P1 on the DC link fuses, converter module only. This connection contains a jumper on inverter modules.
	J3	24V DC signal from connector P3 on the LCL filter module.
	J4	240V AC and optional 24V DC control power supply from control power connector P4.
9	CTL	Fiber optic connection from L0 or M0 on the fiber transceiver board in the control pod.
	PDI	Fiber optic connection from the LCL filter module.

NRS Module (Cat. No. 20-750-MI*n-xnnnxnnn*)

IMPORTANT Do not remove protective covers from wire harnesses, circuit board connectors, terminal blocks, and fiber-optic ports unless used at the time of installation. Removing a protective cover can lead to contamination.

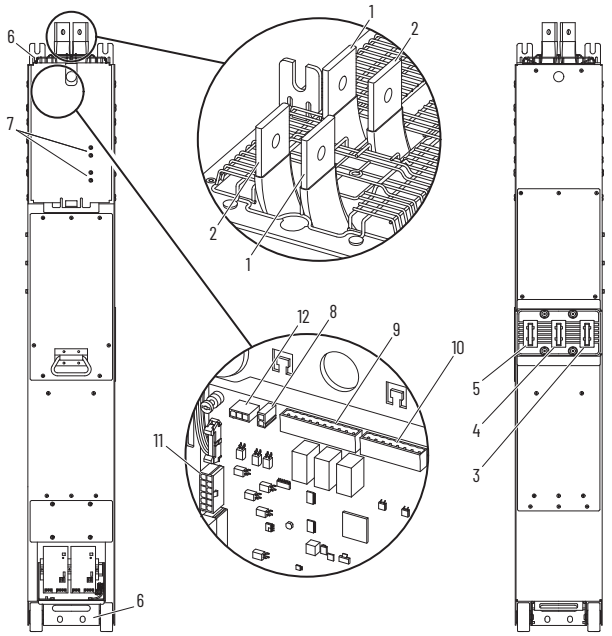

Front View | Protective connection covers not shown for clarity only. | Rear View

Item	Connection	Description
1	+DC	+DC bus connection to DC/link bus bar and fuse.
2	-DC	-DC bus connection to DC/link bus bar and fuse.
3	R/L1	AC bus connection from the stab receptacle assembly.
4	S/L2	AC bus connection from the stab receptacle assembly.
5	T/L3	AC bus connection from the stab receptacle assembly.
6	GND	PE chassis ground connection.
7	+DC, -DC	+DC and -DC bus test points.
8	J2	DC fuse condition signal from connector P2 on the DC link fuses.
9	J10	Customer output connections for power module precharge complete, fault, and alarm signals.
10	J11	Customer input connections for power module clear faults and precharge enable signals.
11	J12	240V AC and thermal switch control signals from cabinet harness connector P12.
12	J13	DC bus conditioner signals from connector P13 on the DC bus conditioner (when present).

LCL Filter Module (Cat. No. 20-750-ML1-*xnnnxnnn*)

IMPORTANT Do not remove protective covers from wire harnesses, circuit board connectors, terminal blocks, and fiber-optic ports unless used at the time of installation. Removing a protective cover can lead to contamination.

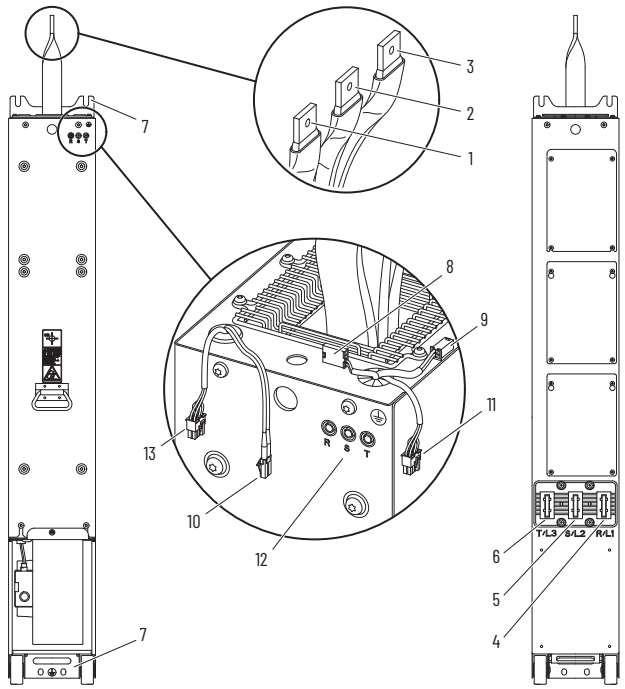

Front View | Protective connection covers not shown for clarity only. | Rear View

Item	Connection	Description
1	R	AC bus connection from the AC link bus bar and fuse assembly.
2	S	AC bus connection from the AC link bus bar and fuse assembly.
3	T	AC bus connection from the AC link bus bar and fuse assembly.
4	R/L1	AC bus connection to the stab receptacle assembly.
5	S/L2	AC bus connection to the stab receptacle assembly.
6	T/L3	AC bus connection to the stab receptacle assembly.
7	GND	PE chassis ground connection.
8	P1	AC fuse condition signal from connector P5 on the AC bus bar assembly fuses.
9	P2	240V AC supply from connector P4 on the control bus connector (when present) or customer-supplied source.
10	PDI	Fiber optic cable connection on the power layer interface board in the power module.
11	P3	24V DC signal connection to J3 on the power module IO panel.
12	R, S, T	AC bus test points.
13	P3	24V DC signal connection to J3 on a second power module I/O panel (larger LCL modules only).

LCL Filter Module (Cat. No. 20-750-ML4-*xnnnxnnn*)

IMPORTANT Do not remove protective covers from wire harnesses, circuit board connectors, terminal blocks, and fiber-optic ports unless used at the time of installation. Removing a protective cover can lead to contamination.

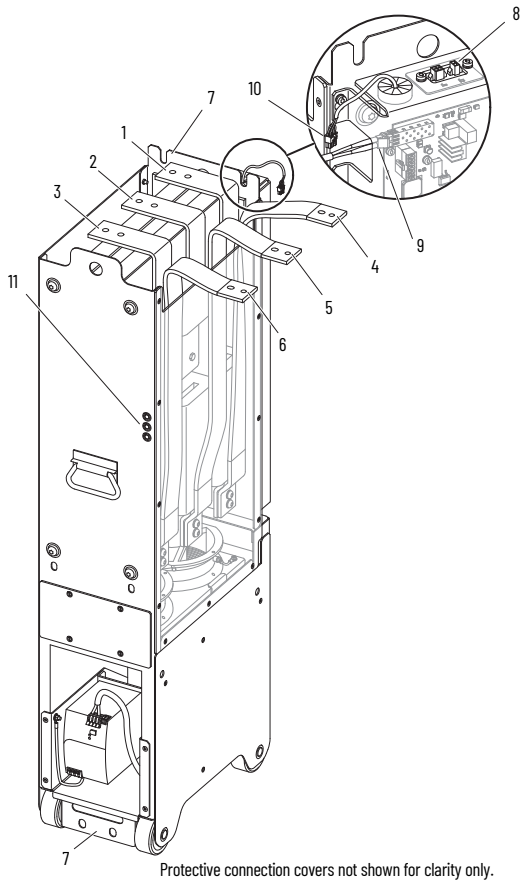

Protective connection covers not shown for clarity only.

Item	Connection	Description
1	R/L1	AC bus connection from the AC input link bus bar and fuse assembly.
2	S/L2	AC bus connection from the AC input link bus bar and fuse assembly.
3	T/L3	AC bus connection from the AC input link bus bar and fuse assembly.
4	U/T1	AC bus connection to the line side converter power module.
5	V/T2	AC bus connection to the line side converter power module.
6	W/T3	AC bus connection to the line side converter power module.
7	GND	PE chassis ground connection.
8	J1	AC input fuses condition signal from connector P1.
	J2	240V AC supply from control power connector P2.
9	PDI	Fiber optic cable connection to the power layer interface board in the line side converter power module.
10	P3	24V DC signal connection to J3 on the power module IO panel.
11	R, S, T	AC bus test points.

Frame 8 AC Precharge Module (Cat. No. 20-750-MACP-CD-F8M, 20-750-MACP-x-F8M)

IMPORTANT Do not remove protective covers from wire harnesses, circuit board connectors, terminal blocks, and fiber-optic ports unless used at the time of installation. Removing a protective cover can lead to contamination.

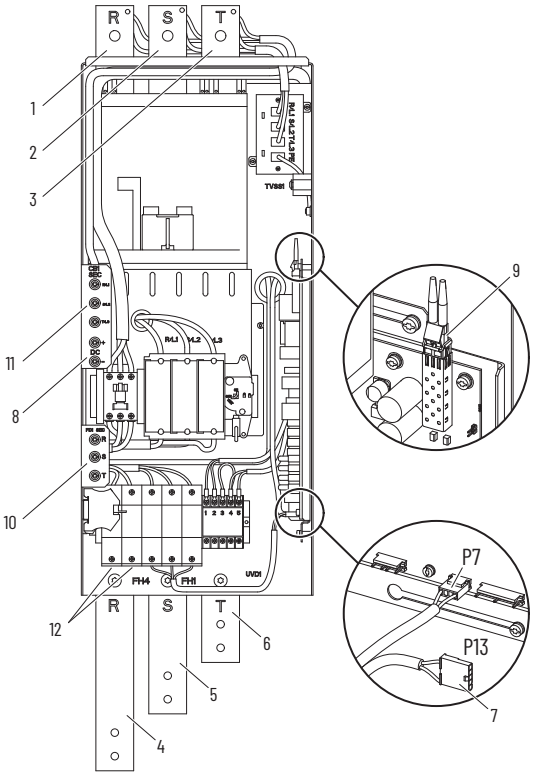

Protective connection covers not shown for clarity only.

Item	Connection	Description
1	R/L1	AC output connection to the AC link bus bar and fuse assembly.
2	S/L2	AC output connection to the AC link bus bar and fuse assembly.
3	T/L3	AC output connection to the AC link bus bar and fuse assembly.
4	R/L1	AC input connection from the AC input bus bar.
5	S/L2	AC input connection from the AC input bus bar.
6	T/L3	AC input connection from the AC input bus bar.
7	P13	+DC and -DC bus connections from connector P14 to the +DC and -DC test points. The +DC and -DC bus to connector P14 wire harness must be customer-sourced.
8	+DC, -DC	+DC and -DC test point connections to connector P7 on the AC precharge board.
9	ACP	Fiber-optic cable connection from ACP0 on the fiber interface board in the control pod.
10	R/L1, S/L2, T/L3	AC line test point connections.
11	R/L1, S/L2, T/L3	AC bus test point connections.
12	FH4	Fused connection to customer-sourced control transformer. See AC Precharge Module Fuses on page 9 for fuse specifications.

Frame 9 AC Precharge Module (Cat. No. 20-750-MACP-CD-F9M, 20-750-MACP-x-F9M)

IMPORTANT Do not remove protective covers from wire harnesses, circuit board connectors, terminal blocks, and fiber-optic ports unless used at the time of installation. Removing a protective cover can lead to contamination.

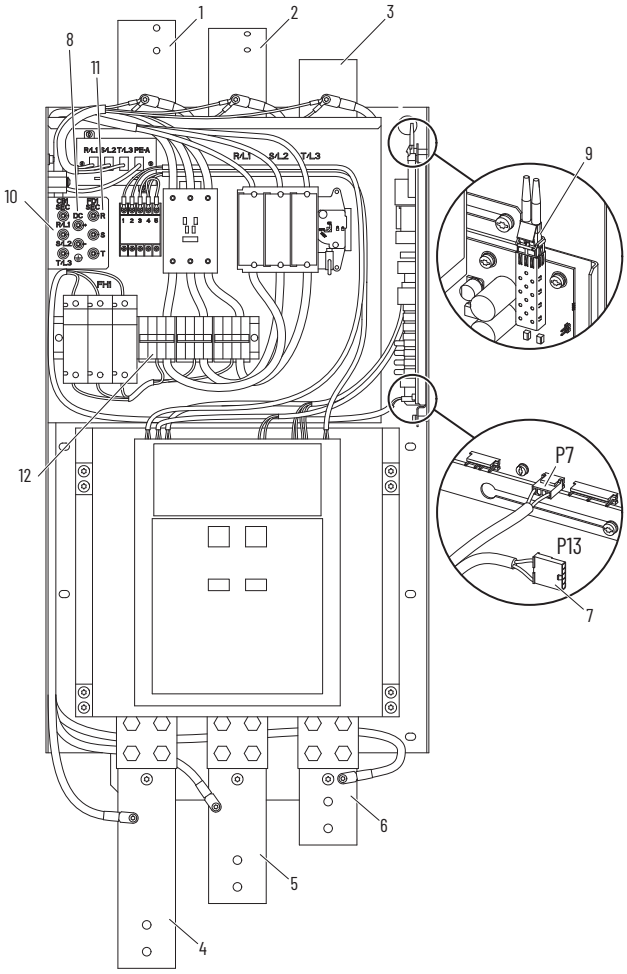

Protective connection covers not shown for clarity only.

Item	Connection	Description
1	R/L1	AC output connection to the AC link bus bar and fuse assembly.
2	S/L2	AC output connection to the AC link bus bar and fuse assembly.
3	T/L3	AC output connection to the AC link bus bar and fuse assembly.
4	R/L1	AC input connection from the AC input bus bar.
5	S/L2	AC input connection from the AC input bus bar.
6	T/L3	AC input connection from the AC input bus bar.
7	P13	+DC and -DC bus connections from connector P14 to the +DC and -DC test points. The +DC and -DC bus to connector P14 wire harness must be customer-sourced
8	+DC, -DC	+DC and -DC test point connections to connector P7 on the AC precharge board.
9	ACP	Fiber optic cable connection to ACP0 on the fiber interface board in the control pod.
10	R/L1, S/L2, T/L3	AC bus test point connections.
11	R/L1, S/L2, T/L3	AC line test point connections.
12	TB1	Customer-sourced connections to customer-sourced fused holders FH4 and FH5 and customer-sourced control transformer. See AC Precharge Module Fuses on page 9 for fuse specifications.

DC Precharge Modules (Cat. No. 20-750-MDCP*n-xx*-F8M)

IMPORTANT Do not remove protective covers from wire harnesses, circuit board connectors, terminal blocks, and fiber-optic ports unless used at the time of installation. Removing a protective cover can lead to contamination.

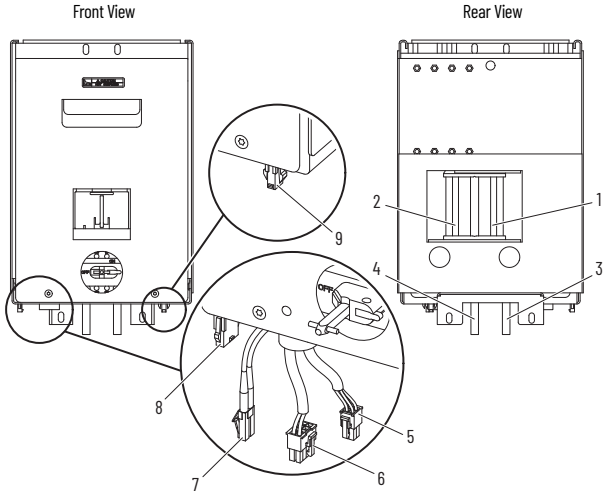

Protective connection covers not shown for clarity only.

Item	Connection	Description
1	+DC	+DC bus connection from stab receptacle assembly.
2	-DC	-DC bus connection from stab receptacle assembly.
3	+DC	+DC bus connection to power module +DC bus terminal.
4	-DC	-DC bus connection to power module -DC bus terminal.
5	P4	240V AC and optional 24V DC control power supply to connector J4 on the power module I/O panel.
6	P3	24V DC signal to connector J3 on the power module.
7	DCP	Fiber-optic cable connection to PDI on the power layer interface board in the power module.
8	J13	240V AC and optional 24V control power supply from control bus connection or customer-supplied source.
9	J12	240V AC power supply to connector P1 on the IP54 roof fan (if present).

Frame 8...15 Power Bay DC Link/Fuse and Control Bus Connector (Cat. No. 20-750-MDCL1-*xx*-F8M)

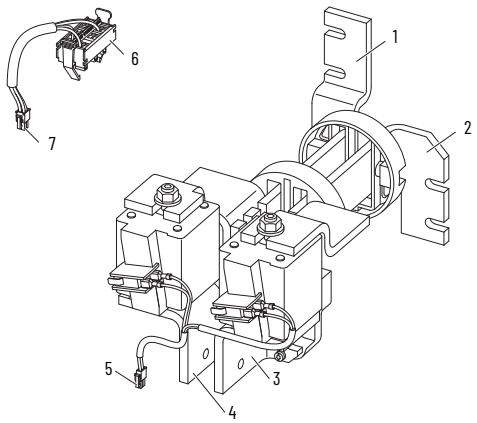

Item	Connection	Description
1	+DC	+DC bus connection from +DC bus bar.
2	-DC	-DC bus connection from -DC bus bar.
3	-DC	-DC bus connection to power module -DC terminal.
4	+DC	+DC bus connection to power module +DC terminal.
5	P1	DC fuse condition signal to connector J1 on the power module I/O panel.
6	—	To control bus assembly (cat. no. 20-750-MCBUS1-*xx*-F*x*M, 20-750-MCBUS1-*xx*-F*xx*M)
7	P4	240V AC and optional 24V DC control power supply to connector J4 on the power module I/O panel.

Frame 8 Regenerative Drive DC Link/Fuse (Cat. No. 20-750-MDCL2-*xx*-F8M)

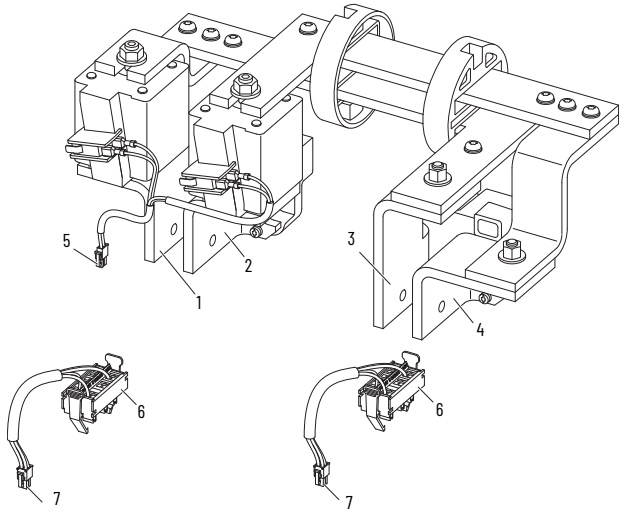

Item	Connection	Description
1	+DC	+DC bus connection from power module +DC terminal.
2	-DC	-DC bus connection from power module -DC terminal.
3	+DC	+DC bus connection to power module +DC terminal.
4	-DC	-DC bus connection to power module -DC terminal.
5	P1	DC fuse condition signal to connector J1 on the power module I/O panel.
6	—	To control bus assembly (cat. no. 20-750-MCBUS1-*xx*-FxM, 20-750-MCBUS1-*xx*-F*xx*M).
7	P4	240V AC and optional 24V DC control power supply to connector J4 on the power module I/O panel.

Frame 7 DC Link/Fuse (Cat. No. 20-750-MDCL1-*xx*-F7M)

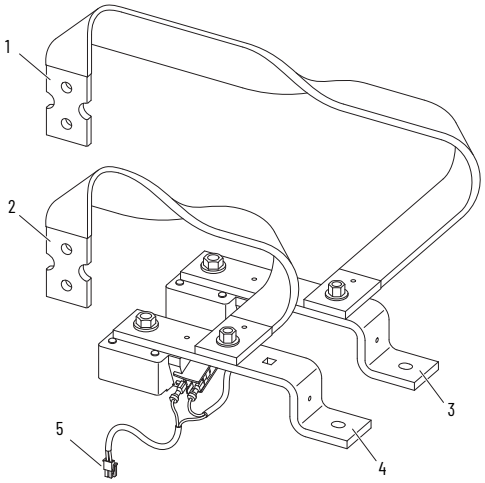

Item	Connection	Description
1	+DC	+DC bus connection from +DC bus bar terminal.
2	-DC	-DC bus connection from -DC bus bar terminal.
3	+DC	+DC bus connection to power module +DC terminal.
4	-DC	-DC bus connection to power module -DC terminal.
5	P1	DC fuse condition signal to connector J1 on the power module I/O panel.

NRS 1X DC Link/Fuse Assembly (Cat. No. 20-750-MDCL1-*xx*-F*n*M)

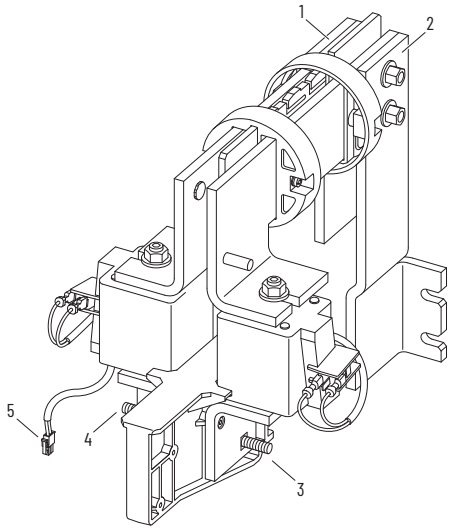

Item	Connection	Description
1	+DC	+DC bus connection from +DC bus bar.
2	-DC	-DC bus connection from -DC bus bar.
3	-DC	-DC bus connection to power module -DC terminal.
4	+DC	+DC bus connection to power module +DC terminal.
5	P2	DC fuse condition signal to connector J2 on the power module control board.

NRS 2X DC Link/Fuse Assembly (Cat. No. 20-750-MDCL2-*xx*-F*n*M)

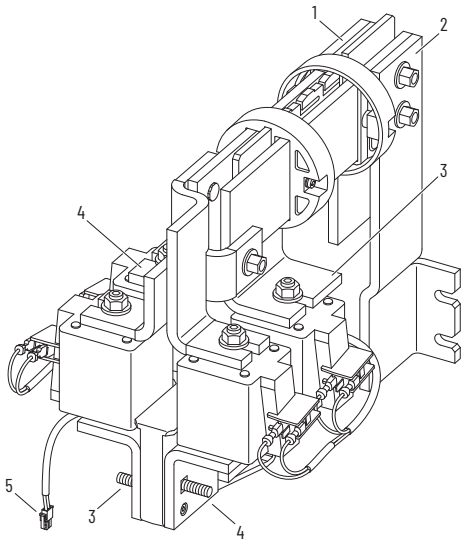

Item	Connection	Description
1	+DC	+DC bus connection from +DC bus bar.
2	-DC	-DC bus connection from -DC bus bar.
3	-DC	-DC bus connection to power module -DC terminal.
4	+DC	+DC bus connection to power module +DC terminal.
5	P2	DC fuse condition signal to connector J2 on the power module control board.

Control Pod Connections (Cat. No. 20-750-MCP0D1-F7M, 20-750-MCP0D2-F7M, 20-750-MCP0D1-F8M, 20-750-MCP0D2-F8M)

Connections for the main control, fiber-optic interface, and fiber-optic transceiver circuit boards are identified in these illustrations and tables. The control pod includes the main control circuit board and fiber interface circuit board.

Control Pod Circuit Board Locations

Frame 7...15 control pod (catalog number 20-750-MCP0D1-F8M) shown.

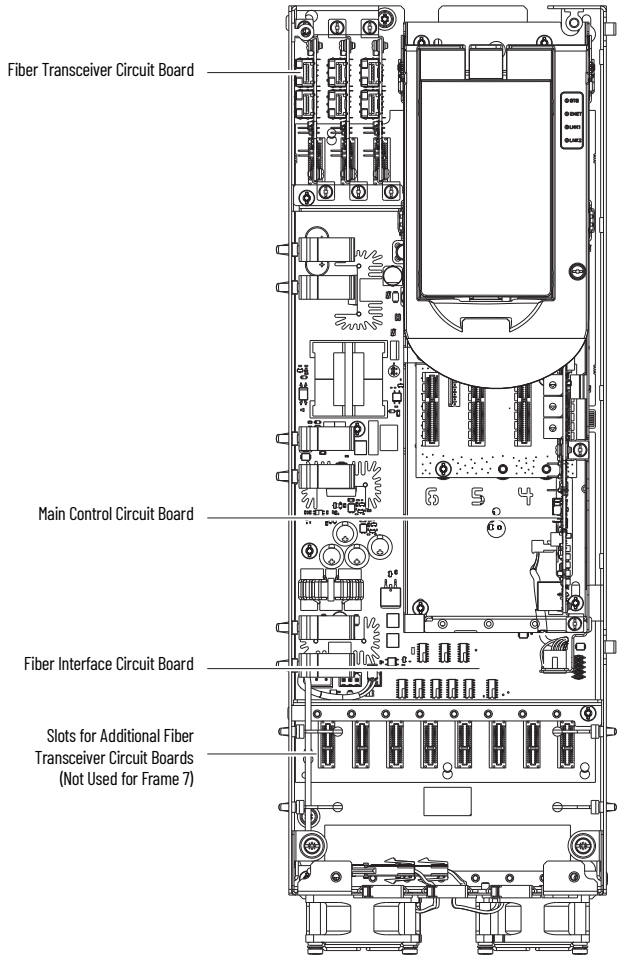

Main Control Board Details (Cat. No. 20-750-MCP0D1-F7M, 20-750-MCP0D2-F7M, 20-750-MCP0D1-F8M, 20-750-MCP0D2-F8M)

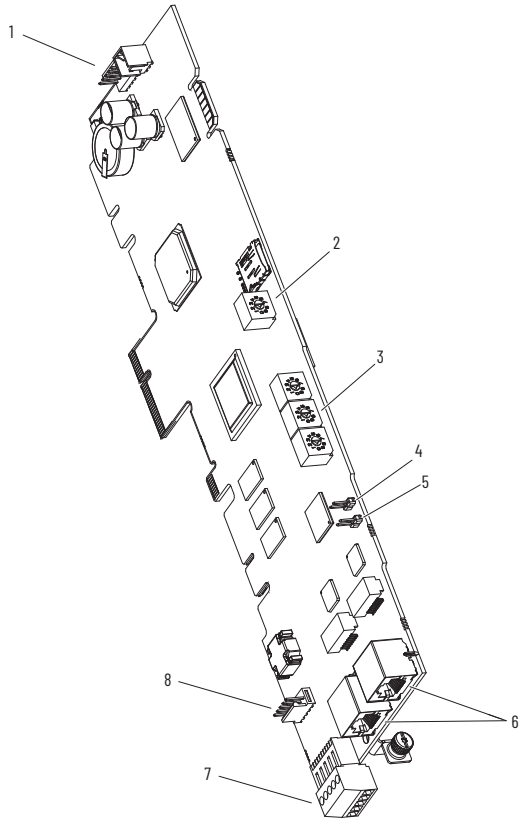

Item	Name	Description
1	HIM Connector	DPI Port 1 (HIM Cradle) connection.
2	Control Selector	Rotary switch for setting the programming mode.
3	Embedded EtherNet/IP Address Selectors	Rotary switches for setting lowest octet of EtherNet address (forces address to 192.168.1.xxx). See the PowerFlex Drives with TotalFORCE Control Programming Manual, publication 750-PM100 for instructions on setting the IP address.
4	SAFETY Jumper	Safety enable jumper. Removed when safety option is installed.
5	ENABLE Jumper	Hardware enable jumper. TB1 becomes an Enable when this jumper is removed.
6	Embedded EtherNet/IP Connectors	Network cable connections.
7	TB1	I/O terminal block.
8	DPI Port 2	Cable connection for handheld and remote HIM options.

Main Control Board TB1 I/O Terminal Designations

Fixed I/O	Terminal	Name	Description
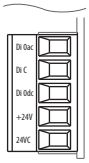	Di 0ac	Digital input 0 120V AC (132V AC max)	Connections for AC power supply. High state: 100...132V AC Low state: 0...30V AC
	Di C	Digital input common	Digital input common.
	Di 0dc	Digital input 0 24V DC (30V DC max)	Connections for DC power supply. High state: 20...24V DC Low state: 0...5V DC
	+24V	+24 volt power	Connections for drive supplied 24V power. 150 mA maximum.
	24VC	24 volt common	

Control Pod Connections (Cat. No. 20-750-MCP0D3-F7M, 20-750-MCP0D4-F7M, 20-750-MCP0D3-F8M, 20-750-MCP0D4-F8M)

Connections for the main control, fiber-optic interface, and fiber-optic transceiver circuit boards are identified in these illustrations and tables. The control pod includes the main control circuit board and fiber interface circuit board.

IMPORTANT Do not remove protective covers from wire harnesses, circuit board connectors, terminal blocks, and fiber-optic ports unless used at the time of installation. Removing a protective cover can lead to contamination.

Control Pod Circuit Board Locations

Frame 7...15 control pod (catalog number 20-750-MCP0D3-F8M) shown.

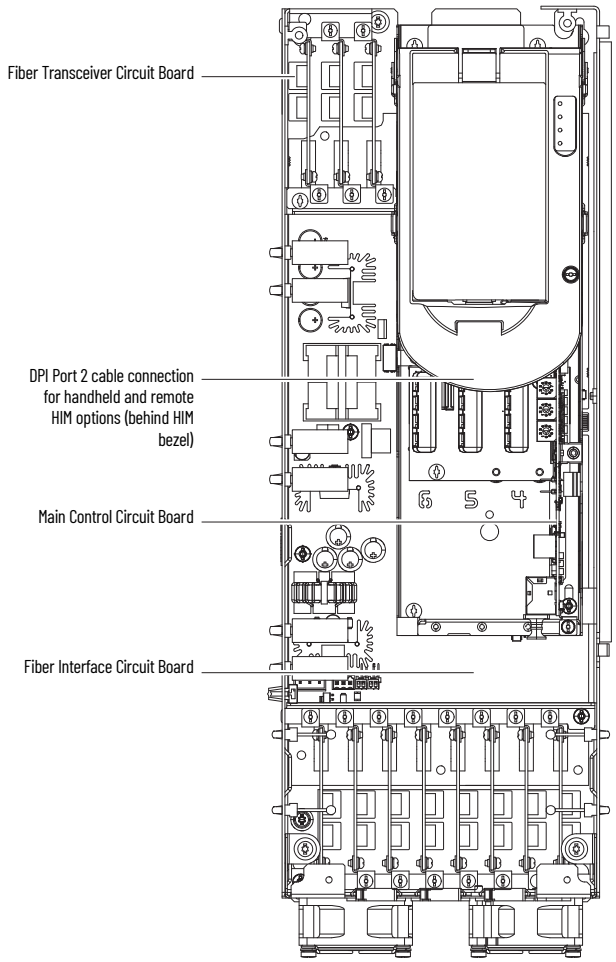

Main Control Board Details (Cat. No. 20-750-MCP0D3-F7M, 20-750-MCP0D4-F7M, 20-750-MCP0D3-F8M, 20-750-MCP0D4-F8M)

IMPORTANT Do not remove protective covers from wire harnesses, circuit board connectors, terminal blocks, and fiber-optic ports unless used at the time of installation. Removing a protective cover can lead to contamination.

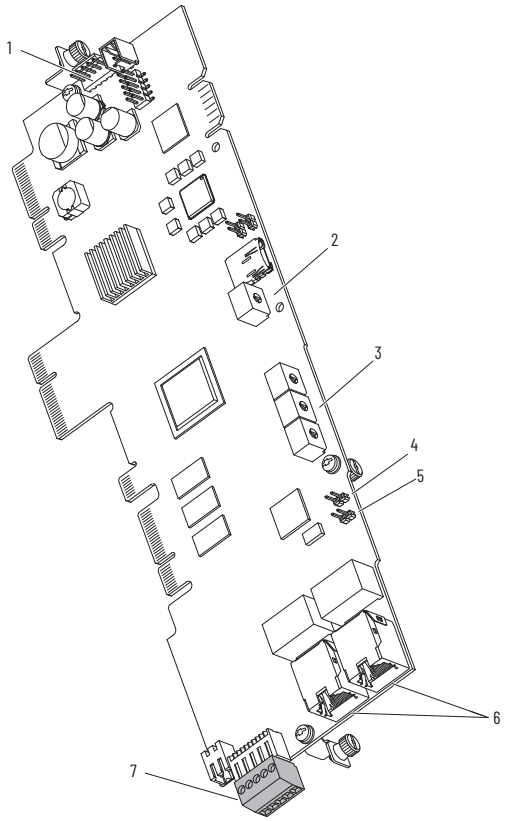

Protective connection covers not shown for clarity only.

Item	Name	Description
1	HIM Connector	DPI Port 1 (HIM Cradle) connection.
2	Control Selector	Rotary switch for setting the programming mode.
3	Embedded EtherNet/IP Address Selectors	Rotary switches for setting lowest octet of EtherNet/IP address (forces address to 192.168.1.xxx). See the PowerFlex Drives with TotalFORCE Control Programming Manual, publication 750-PM100 for instructions on setting the IP address.
4	SAFETY Jumper	Safety enable jumper. Removed when safety option is installed.
5	ENABLE Jumper	Hardware enable jumper. TB1 becomes an Enable when this jumper is removed.
6	Embedded EtherNet/IP Connectors	Network cable connections.
7	TB1	I/O terminal block.

Main Control Board TB1 I/O Terminal Designations

Fixed I/O	Terminal	Name	Description
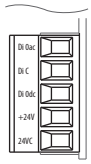	Di 0ac	Digital input 0 120V AC (132V AC max)	Connections for AC power supply. High state: 100...132V AC Low state: 0...30V AC
	Di C	Digital input common	Digital input common.
	Di 0dc	Digital input 0 24V DC (30V DC max)	Connections for DC power supply. High state: 20...24V DC Low state: 0...5V DC
	+24V	+24 volt power	Connections for drive supplied 24V power. 150 mA maximum.
	24VC	24 volt common	

Fiber Interface Board Details

IMPORTANT Do not remove protective covers from wire harnesses, circuit board connectors, terminal blocks, and fiber-optic ports unless used at the time of installation. Removing a protective cover can lead to contamination.

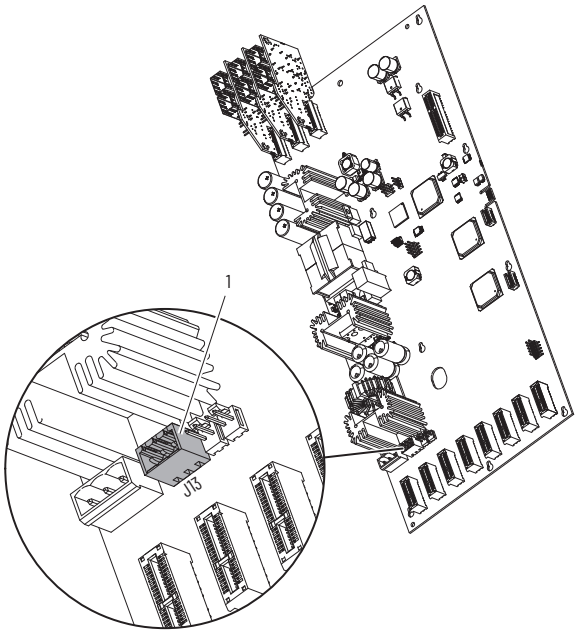

Protective connection covers not shown for clarity only.

No.	Name	Description
1	Connector J13	Connection for terminal block P13 - optional external 24V DC power supply.

Optional External Power Supply

An external power source supplies control power to the drive when the drive is not energized. Connect an optional external 24V power supply to terminal block P13.

External Power Supply Connections

Power Block	Terminal	Name	Description
	AP+	+24 volt auxiliary power	Connections for an optional, auxiliary power supply: 24V DC ±10%, 5 A, PELV (Protective Extra Low Voltage) or SELV (Safety Extra Low Voltage).
	AP–	Auxiliary power common	
	Sh	Shield	Terminating point for wire shields.

Fiber Transceiver Board Details

IMPORTANT Do not remove protective covers from wire harnesses, circuit board connectors, terminal blocks, and fiber-optic ports unless used at the time of installation. Removing a protective cover can lead to contamination.

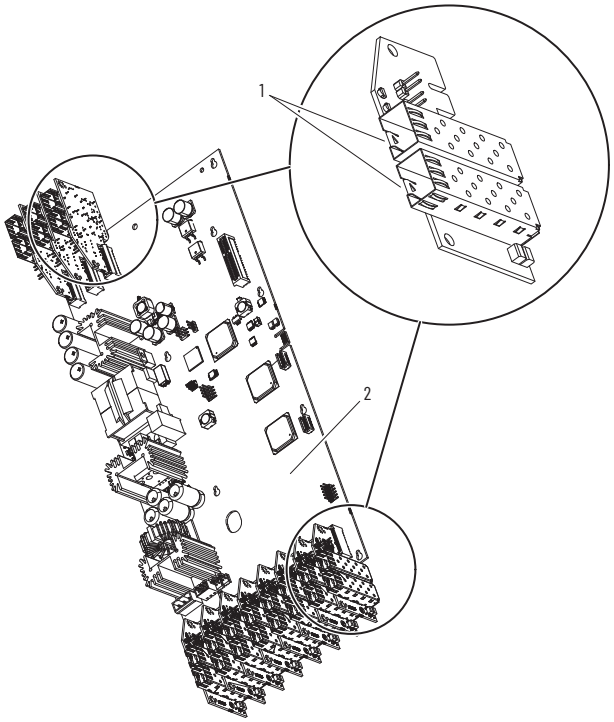

Protective connection covers not shown for clarity only.

Item	Frame 7 Name	Frame 8...15 Name	Description
1	ACPC	ACP0	Fiber transceiver port for fiber-optic connection with AC precharge control board.
	TAM	ACP1 TAM	Fiber transceiver port for fiber-optic connection with torque accuracy module.
	L0	L0...L9	Fiber transceiver port for fiber-optic connection with power modules used as line side converters.
	M0	M0...M9	Fiber transceiver port for fiber-optic connection with power modules used as motor side inverters.
2	—	—	Fiber interface board.

Control Pod Fiber-optic Connections

ATTENTION: Hazard of permanent eye damage exists when using optical transmission equipment. This product emits intense light and invisible radiation. Do not look into module ports or fiber-optic cable connectors.

To install the fiber-optic connector in the transceiver, remove the transceiver cartridge from the cage, insert the fiber-optic connector into the transceiver until an audible 'click' is heard, and insert the transceiver cartridge into the cage.

IMPORTANT Minimum inside bend radius for fiber-optic cable is 50 mm (2 in.). Any bends with a shorter inside radius can permanently damage the fiber-optic cable. Signal attenuation increases as inside bend radius is decreased.

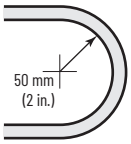

Fiber-optic Cable Kits

Rockwell Automation recommends the fiber-optic kits listed in this table. Each kit contains the fiber-optic cable and fiber transceiver.

Catalog Number	Length, *mm (in.)*
20-750-MF0C-1K3	1300 (51)
20-750-MF0C-1K5	1500 (59)
20-750-MF0C-2K0	2000 (79)
20-750-MF0C-2K2	2200 (87)
20-750-MF0C-2K7	2700 (106)
20-750-MF0C-3K2	3200 (126)
20-750-MF0C-4K0	4000 (157)
20-750-MF0C-4K6	4600 (181)
20-750-MF0C-5K4	5400 (213)
20-750-MF0C-6K0	6000 (236)
20-750-MF0C-6K8	6800 (268)
20-750-MF0C-7K4	7400 (291)
20-750-MF0C-7K8	7800 (307)
20-750-MF0C-8K3	8300 (327)

This section lists the number of fiber-optic cable kits used for each installation. See page 18 for table footnotes.

Fiber-optic Cable Kit Usage by Length

Frame	Cable Length Usage, *mm (in.)*													
	1300 (51)	1500 (59)	2000 (79)	2200 (87)	2700 (106)	3200 (126)	4000 (157)	4600 (181)	5400 (213)	6000 (236)	6800 (268)	7400 (291)	7800 (307)	8300 (327)
Regenerative and Low Harmonic Drives, Left-to-Right Orientation (Power Module to Control Pod)														
7			2											
8				2										
9				1		3								
10				1		1	3		1					
11				1		1	4		2					
12				1		1	2		3	3				
Regenerative and Low Harmonic Drives, Right-to-Left Orientation (Power Module to Control Pod)														
8						2								
9						1	2		1					
10			1	1		2	2							
11			1	1		1	3		2					
12			1	1		1	2		5					
Regenerative and Low Harmonic Drives, Back-to-Back Configuration (Power Module to Control Pod)														
13				1		1	3	2	3	1	1			
14				1		1	4	2	4	2	2			
15				1		1	2	2	5	4	2	3		
Regenerative and Low Harmonic Drives, In-Line Configuration (Power Module to Control Pod)														
13				1		1	3		3	1	3			
14				1		1	4		4	1	3	1	1	
15				1		1	2		5	4	2	2	1	2
AC Precharge Control Board to Control Pod - Regenerative and Low Harmonic Drives														
7				1										
8		1												
9		1												
10		1												
11		1												
12		1												
13			1		1(1)		1(2)							
14			1		1(1)		1(2)							
15			1		1(1)		1(2)							
Torque Accuracy Module to Control Pod- Regenerative and Low Harmonic Drives														
7				1										
8						1								
9							1							
10									1					
11										1				
12											1			

Fiber-optic Cable Kit Usage by Length (continued)

Frame	Cable Length Usage, *mm (in.)*													
	1300 (51)	1500 (59)	2000 (79)	2200 (87)	2700 (106)	3200 (126)	4000 (157)	4600 (181)	5400 (213)	6000 (236)	6800 (268)	7400 (291)	7800 (307)	8300 (327)
Common Bus Inverter (Power Module to First Control Pod - Upper Location)														
8				1										
9				2										
10				3										
11				2		2								
12				3		2								
13				3			1	2						
14				2		2		2	2					
15				3		2		2	3					
Common Bus Inverter (Power Module to Second Control Pod - Lower Location)														
8						1								
9						2								
10						2	1							
11						2	2							
12						2	3							
Torque Accuracy Module to First Control Pod (Upper Location) - Common Bus Inverter														
8				1										
9						1								
10, 13						1								
11, 14							1							
12, 15							1							
Torque Accuracy Module to Second Control Pod (Lower Location) - Common Bus Inverter														
8						1								
9						1								
10						1								
11							1							
12							1							
Regenerative Bus Supply, Left-to-Right Orientation (Power Module to Control Pod)														
7			1											
8			1											
9				1		1								
10				1		1	1							
11				1		1	2							
12				1		1	2		1					
Regenerative Bus Supply, Right-to-Left Orientation (Power Module to Control Pod)														
8						1								
9						1	1							
10			1	1		1								
11			1	1		1	1							
12			1	1		1	2							
Regenerative and Low Harmonic Bus Supply, Back-to-Back Configuration (Power Module to Control Pod)														
13				1		1	1	2	1					
14				1		1	2	2	2					
15				1		1	2	2	3	1				
Regenerative and Low Harmonic Bus Supply, In-Line Configuration (Power Module to Control Pod)														
13				1		1	1		2	1				
14				1		1	2		2	1	1			
15				1		1	2		3	1	2			
AC Precharge Control Board to Control Pod - Regenerative Bus Supply														
7				1										
8		1												
9		1												
10		1												
11		1												
12		1												

(1) Used to connect the second AC precharge control board to the control pod in a back-to-back configuration.
(2) Used to connect the second AC precharge control board to the control pod in an in-line configuration.

Fiber Optic Cables Included with Modules

Module	**Length,** *mm (in.)*
Frames 8...15, LCL filter module to power module (converter)	1300 (51)
Frame 7, LCL filter module to power module (converter)	1500 (59)
DC precharge module to power module (inverter)	840 (33)

Fiber-optic cables can be independently sourced, as long as they meet this criteria.

Category	**Specification**
Type	Duplex multimode LC-LC
Fiber type	62.5/125 micrometer
Number of fibers	2
Core diameter	62.5 ± 2.0 micrometers
Outer jacket	PVC - polyvinyl chloride
Operating temperature	-55...+85 °C (-67...+185 °F)
Strain relief boots	Straight
Agency	NEC/(UL): OFNR IEEE: 802.3Z

Rockwell Automation Support

Use these resources to access support information.

Technical Support Center	Find help with how-to videos, FAQs, chat, user forums, and product notification updates.	rok.auto/support
Knowledgebase	Access Knowledgebase articles.	rok.auto/knowledgebase
Local Technical Support Phone Numbers	Locate the telephone number for your country.	rok.auto/phonesupport
Literature Library	Find installation instructions, manuals, brochures, and technical data publications.	rok.auto/literature
Product Compatibility and Download Center (PCDC)	Download firmware, associated files (such as AOP, EDS, and DTM), and access product release notes.	rok.auto/pcdc

Documentation Feedback

Your comments help us serve your documentation needs better. If you have any suggestions on how to improve our content, complete the form at rok.auto/docfeedback.

Waste Electrical and Electronic Equipment (WEEE)

At the end of life, this equipment should be collected separately from any unsorted municipal waste.

Rockwell Automation maintains current product environmental compliance information on its website at rok.auto/pec.

Your comments help us serve your documentation needs better. If you have any suggestions on how to improve our content, complete the form at rok.auto/docfeedback.
For technical support, visit rok.auto/support.

Rockwell Otomasyon Ticaret A.Ş. Kar Plaza İş Merkezi E Blok Kat:6 34752, İçerenköy, İstanbul, Tel: +90 (216) 5698400 EEE Yönetmeliğine Uygundur

Connect with us.

rockwellautomation.com — expanding **human possibility**™

AMERICAS: Rockwell Automation, 1201 South Second Street, Milwaukee, WI 53204-2496 USA, Tel: (1) 414.382.2000, Fax: (1) 414.382.4444
EUROPE/MIDDLE EAST/AFRICA: Rockwell Automation NV, Pegasus Park, De Kleetlaan 12a, 1831 Diegem, Belgium, Tel: (32) 2 663 0600, Fax: (32) 2 663 0640
ASIA PACIFIC: Rockwell Automation, Level 14, Core F, Cyberport 3, 100 Cyberport Road, Hong Kong, Tel: (852) 2887 4788, Fax: (852) 2508 1846

PN-628489

Publication 750-PC101D-EN-P - June 2021 | Supersedes Publication 750-PC101C-EN-P - June 2020