Installation Instructions

Original Instructions

Kinetix VPC Continuous-duty Servo Motors with 165 mm, 215 mm, and 300 mm Frame Sizes

Catalog Numbers VPC-B1652A, VPC-B1653A, VPC-B1652D, VPC-B1653D, VPC-B1654D, VPC-B21539, VPC-B21549, VPC-B2153A, VPC-B2154A, VPC-B2154B, VPC-B2154D, VPC-B2155B, VPC-B2155D, VPC-B2156A, VPC-B2156D, VPC-B30029, VPC-B30039, VPC-B30049, VPC-B3002A, VPC-B3003A, VPC-B3004A, VPC-B3004B, VPC-B3004D

Topic	Page
Summary of Changes	1
About the Kinetix VPC Continuous-duty Motors	2
Catalog Number Explanation	2
Before You Install the Motor	3
Functional Safety	5
Motor Installation	6
VPC-B165*xx*, VPC-B215*xx*, and VPC-B300*xx* Motor Dimensions (single connector)	9
VPC-B165*xx*, VPC-B215*xx*, and VPC-B300*xx* Motor Dimensions (motor power/feedback connectors)	11
Connector Data	14
Motor Load Force Ratings	15
Environmental Ratings	28
2090-Series Motor Cables	28
Shaft Seal Kits	28
Additional Resources	29

Summary of Changes

This publication contains new and updated information as indicated in the following table.

Topic	Page
Added Kinetix VPC motor without fan (A option) to existing catalog numbers and dimensions.	2, 9…13
Added catalog numbers VPC-B2154B, VPC-B2155B, VPC-B2156A, and VPC-B3004B (motors without fan option).	
Added VPC-B3004*x*-M servo motors with absolute multi-turn encoders (Hiperface protocol).	2
Added Lifting Instructions.	3
Updated functional safety certification information.	5

About the Kinetix VPC Continuous-duty Motors

Kinetix® VPC servo motors feature single-turn or multi-turn high-resolution absolute encoders, and are available with or without 24V DC brakes. These compact brushless servo motors meet the demanding requirements of high-performance motion systems.

You are responsible for inspecting the equipment before accepting the shipment from the freight company. Check the items that you receive against your purchase order. Notify the carrier of shipping damage or missing items immediately. Store or operate your motor in a clean and dry location within the Environmental Ratings on page 28.

ATTENTION: To avoid personal injury and damage to the motor, do not lift or handle the motor by the motor shaft. The cap on the shaft can come loose and cause you to drop the motor.

Catalog Number Explanation

VP C - B *xxx xx* - *x x x x x* S

Factory Options
S = Shaft seal, standard (IP65)

Cooling
A = Natural convection
F = Forced ventilation

Brake
2 = No Brake
4 = 24V DC Brake

Connector
1 = Single SpeedTec DIN connector, right angle, 325° rotatable
7 = SpeedTec DIN connector, right angle, 180° rotatable

Shaft Key
J = Shaft key
K = Smooth shaft

Feedback
S = 1024 sin/cos, absolute single-turn encoder (Hiperface protocol)
M = 1024 sin/cos, absolute multi-turn encoder (Hiperface protocol) (1)
Q = 23-bit absolute multi-turn digital encoder, SIL2/PLd rated, 12-bit secondary safety channel, (Hiperface DSL protocol)
Y = 25-bit, absolute multi-turn digital encoder (EnDat digital protocol)

Rated Speed (2) (3)
9 = 1000 rpm
A = 1500 rpm
B = 2000 rpm
D = 3000 rpm

Magnet Stack Length (2, 3, 4, 5, 6 stacks) (3)

Bolt Circle Diameter (BCD) / Shaft Height (SH)
165 = IEC 165 mm BCD / SH 80 mm
215 = IEC 215 mm BCD / SH 100 mm
300 = IEC 300 mm BCD / SH 132 mm

Voltage Class
B = 400V

Series Type
C = Continuous duty

Series
VP = Permanent magnet rotary servo motors that are optimized to the ratings of Kinetix 5700 inverters.

(1) M encoder option is available on only VPC-B3004*x* servo motors.
(2) Rated speed hierarchy is only for comparative purposes. Use Motion Analyzer software to size and select motors for your application, and/or the performance specifications in the Kinetix 5700 Drive System Design Guide, publication KNX-RM010.
(3) See VPC-B165xx, VPC-B215xx, and VPC-B300xx Motor Dimensions (single connector, with fan) on page 9 and VPC-B165xx, VPC-B215xx, and VPC-B300xx Motor Dimensions (motor power/feedback connectors, with fan) on page 11 for dimensional changes (L, LB, LD, LE, and B) that result from the number of magnet stacks and the brake.

Before You Install the Motor

Perform these inspection steps and review the guidelines for shaft seals, couplings and pulleys, and electrical noise prevention.

1. Remove the motor carefully from its shipping container.
2. Inspect the motor for any damage.
3. Examine the motor frame, front output shaft, and mounting pilot for any defects.
4. Notify the carrier of shipping damage immediately.

ATTENTION: Do not attempt to open and modify the motor except for the connector orientation as described on page 6. Only a qualified Rockwell Automation employee can service this motor.

Remove the Shaft Cap

Remove the protective cap that is installed on the motor shaft with your hand or by prying it off with a screwdriver. Do not use a hammer or other tools as they can damage the motor shaft.

Lifting Instructions

A hoist, straps, and J-hooks with a lockable clasp capable of supporting the maximum motor weight are recommended.

Read these precautions before attempting to lift the regenerative bus supply.

ATTENTION: All equipment and hardware that is used to lift the motor must be properly sized and rated to lift and hold the weight of the motor safely. To guard against possible personal injury or equipment damage:

- Inspect all hardware for proper attachment and lift using all of the eye-bolts or lifting lugs provided.
- Eye-bolts can unscrew during lifting. Prior to lifting, check the eye-bolts to verify that they are tight. Attach lifting equipment to restrict turning during the lift. Alternatively, lift the unit on a platform or with a sling.
- Eye-bolts or lifting lugs are intended for lifting only the motor and factory mounted accessories. Do not mount additional equipment before lifting and securing the motor.
- Do not mount additional equipment before lifting and securing the motor.
- Do not let any part of the motor or lift equipment contact electrically charged conductors or components.
- Do not subject the motor to high rates of acceleration, deceleration, or shock forces caused by abrupt raising, lowering, swinging, or twisting of a suspended motor during a lift.
- Prevent personnel and their limbs from being directly beneath the motor during a lift.

The angle of lift formed by a lifting rope or chain must be greater than 45° from horizontal. The following figure illustrates proper rigging and lift practices.

Lifting Guidelines

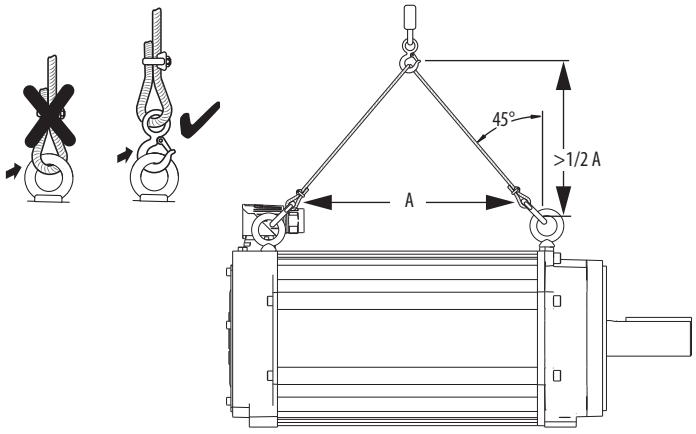

For unusual conditions, such as side-wall and ceiling mounting of horizontal motors and installation of vertical motors shipped in a horizontal position, special precautions must be taken. We recommend that an experienced rigger be employed.

Prolong Motor Life

Proper design and proper maintenance can increase the life of a servo motor. Follow these guidelines to maximize the life of a servo motor that is operated within the Environmental Ratings on page 28:

- Create a drip loop in the motor cables to carry liquids away from the connection to the motor.
- Whenever possible, provide shields that protect the motor housing, shaft, seals, and their junctions from contamination by foreign matter or fluids.
- Shaft seals are subject to wear and require periodic inspection and replacement. Replacement is recommended every 3 months, not to exceed 12 months, depending on use. See Shaft Seal Kits on page 28 for more information.
- Inspect the motor and seals for damage or wear regularly. If you detect damage or excessive wear, replace the item.

Shaft Seals

Your motor has a shaft seal as standard equipment. A shaft seal is required on the motor shaft near the motor front bearing if the shaft is exposed to significant amounts of fine dust or fluids, such as lubrication oil from a gearbox.

An IP65 rating for the motor requires a shaft seal and environmentally sealed connectors and cables.

- See Environmental Ratings on page 28 for a brief description of the IP rating for these motors.
- See Shaft Seal Kits on page 28 for seal kits compatible with your motor.
- See Kinetix Rotary Motion Specifications Technical Data, publication KNX-TD001, to find environmentally sealed connectors and cables compatible with these motors.

Couplings and Pulleys

Mechanical connections to the motor shaft, such as couplings and pulleys, require a torsionally rigid coupling or a reinforced timing belt. The high dynamic performance of servo motors can cause couplings, pulleys, or belts to loosen or slip over time. A loose or slipping connection causes system instability and can damage the motor shaft. All connections between the system and the servo motor shaft must be rigid to achieve acceptable response from the system. Periodically inspect connections to verify their rigidity.

When mounting couplings or pulleys to the motor shaft, verify that the connections are properly aligned and that axial and radial loads are within the specifications of the motor. See Motor Load Force Ratings on page 15 for guidelines to achieve 20,000 hours of motor bearing life or page 22 for guidelines to achieve 40,000 hours of motor bearing life.

ATTENTION: Damage can occur to the motor bearings and the feedback device if sharp impact is applied to the shaft during installation of couplings and pulleys. Damage to the feedback device can result if you apply leverage to the motor mounting face when you remove devices that are mounted on the motor shaft.

Do not strike the shaft, couplings, or pulleys with tools during installation or removal. Use a wheel puller, to apply pressure from the user end of the shaft, when attempting to remove any device from the motor shaft.

Prevent Electrical Noise

Electromagnetic interference (EMI), commonly called electrical noise, can reduce motor performance. Effective techniques to counter EMI include filtering the AC power, by using shielded cables, shielding the signal cables from power wiring, and the practice of good grounding techniques.

Follow these guidelines to avoid the effects of EMI:

- Isolate the power transformers or install line filters on all AC input power lines.
- Do not route motor cables over the vent openings on servo drives.
- Ground all equipment by using a single-point parallel ground system that employs ground bus bars or large straps. If necessary, use additional electrical noise reduction techniques to reduce EMI in noisy environments.

See System Design for Control of Electrical Noise Reference Manual, publication GMC-RM001, for additional information on reducing EMI.

Install Cables

Knowledgeable cable routing and careful cable construction improve system electromagnetic compatibility (EMC).

ATTENTION: The overall shield on the motor and cooling fan power cables must be grounded to obtain an effective encoder signal.
The encoder data signal is transmitted through an impedance-matched twisted-wire pair that requires effective shielding for optimum performance.
Be sure that there is an effective connection between the cable shields and the drive system ground.

To install the motor and cooling fan power cables, observe these guidelines:

- Keep the cable lengths as short as possible.
- Ground the cable shields to prevent EMI from affecting other equipment.

ATTENTION: High voltage can be present on the shields of the motor cables if the shields are not grounded.
Verify that there is a connection to ground for all shields in the motor cables.

Functional Safety

Motors that are equipped with a Hiperface DSL functional safety-rated feedback sensor are designed in compliance with the requirements of the following SICK STEGMANN GmbH documentation to maintain the functional safety rating of the feedback sensor attached. See Catalog Number Explanation on page 2 for details about each option.

Motor Cat. No.	Feedback Sensor Functional-safety Reference Documentation (SICK STEGMANN GmbH)	
VPC-*xxxxxx*-Q	HIPERFACE DSL Safety Manual, publication 8017596/2019-01-17	EFM50-2 Safe Motor Feedback Systems Operating Instructions, publication 8019321/2018-08-17

IMPORTANT In accordance with the feedback sensor manufacturer, you must mount a HIPERFACE DSL motor feedback system (used for a safety function) in an installation situation with a minimum protection class of IP54 according to standard IEC60529:1989 + A1:1999 + A2:2013.

Certification

The TÜV Rheinland group has approved Kinetix VPC continuous-duty servo motors that are equipped with functional-safety certified Hiperface DSL digital encoders. Systems that include these motors can achieve a functional safety rating up to Performance Level d (PLd) and safety category 3 (CAT. 3) per ISO 13849-1, and SIL 2 per IEC 61508, IEC 61800-5-2, and IEC 62061 when used with variable frequency drives that satisfy functional safety requirements of the HIPERFACE DSL Safety Manual (SICK STEGMANN GmbH, publication 8017596/2019-01-17).

To view the TÜV Rheinland certificate and other product certifications currently available from Rockwell Automation, go to http://www.rockwellautomation.com/global/certification/overview. page.

Important Safety Considerations

In addition to the instructions throughout this document, you are also responsible for the following:

- Complete a machine-level risk assessment.
- Certification of the machine to the desired ISO 13849-1 performance level or IEC 62061 SIL level.
- Project management and proof tests in accordance with IEC 61800-5-2.
- The safe-motor feedback system has a maximum Mission Time of 20 years. After this time, the feedback system must be taken out of service.
- The motor feedback system cannot support safety functions that are based on the absolute position without additional measures. If your safety functions are based on the safe absolute position, the motor feedback system supplies only one channel without safety-related diagnostics upon powerup. You must implement a second channel by using other measures.
- The motor feedback system is not able to create a safe state for the drive system independently. The drive system creates the safe state as a response to an error displayed by the motor feedback system.
- To plan and use motors that are equipped with safety-rated feedback sensors requires technical skills that are not explained in this document.

ATTENTION: To avoid damage to the equipment, do not establish or remove electrical connections to the motor feedback system with the voltage switched on.

Performance Level (PL) and Safety Integrity Level (SIL)

For safety-related control systems, Performance Level (PL), according to ISO 13849-1, and SIL levels, according to IEC 61508 and IEC 62061, include a rating of the system's ability to perform its safety functions. All safety-related components of the control system must be included in a risk assessment and the determination of the achieved levels.

See the ISO 13849-1, IEC 61508, and IEC 62061 standards for complete information on the requirements for PL and SIL determination.

Safety-related Parameters

Motors that are equipped with a Hiperface DSL functional safety-rated feedback sensor are designed to maintain the functional safety rating of the feedback sensor attached. The safety parameters of the feedback sensor are as follows.

Attribute	VPC-B*xxxxx*-Q*xxx*F*x*	VPC-B*xxxxx*-Q*xxx*A*x*
Safety Integrity Level (SIL)	SIL2 (IEC 61508), SIL CL2 (IEC 62061)	
Probability of a Dangerous Failure per Hour (PFH)	3.80 E-08 1/h	
Safety Category	CAT. 3 (ISO 13849-1)	
Performance Level (PL)	PLd (ISO 13849-1)	
MTTF (years)	305	

Motor Installation

Motor installation must comply with all local regulations and use of equipment and installation practices that promote safety and electromagnetic compatibility:

- All motors include a mounting pilot for aligning the motor on a machine.
- All motors include mounting feet for optional mounting. To access the rear foot mounting holes, remove the cooling fan subassembly.
- Preferred fasteners are stainless steel.

ATTENTION: Unmounted motors, disconnected mechanical couplings, loose shaft keys, and disconnected cables are dangerous if power is applied.

Identify (tag-out) disassembled equipment and restrict access to (lock-out) the electrical power.

Before you apply power to the motor, remove the shaft key and other mechanical couplings that could be thrown from the shaft.

ATTENTION: Verify that cables are installed and restrained to prevent uneven tension or flexion at the connector. Provide support at 3 m (10 ft) intervals throughout the cable run.

Excessive and uneven lateral force at the cable connector can cause the environmental seal on the connector to open and close as the cable flexes.

Change Connector Orientation

Kinetix VPC continuous-duty motors with catalog number VPC-B*xxxxx*-Q*x*1*xxx* use a connector style that integrates the power, brake, and feedback signals within one connector. You can identify the connector style by the variable number in the motor catalog string. For example, in catalog number VPC-B16539-QJ**1**2FS, the **1** indicates a single SpeedTec, right-angle, 325° rotatable connector.

Kinetix VPC continuous-duty motors with catalog number VPC-B*xxxxx*-S/-M/-Y*x*7*xxx* use two separate connectors. Power and brake are on one connector and the other is used for feedback. For example, in catalog number VPC-B1653A-YJ72FS, the 7 indicates two SpeedTec, right-angle, rotatable connectors. These connectors are rotatable to 180° from the center line of the motor.

The rotatable connector housing lets you move the connector into a position that best protects the connection from environmental contaminates and provides easy access.

ATTENTION: Connectors are designed to be rotated into a fixed position during motor installation, and remain in that position without further adjustment. Strictly limit the applied forces and the number of times the connector is rotated to make sure that connectors meet the International Protection (IP) rating as outlined in Environmental Ratings on page 28.

ATTENTION: Use only hand-applied force when changing the orientation of the connector.

Do not apply force or pull on the cable and do not use tools, such as pliers or vise-grips, to rotate the connector.

Follow these steps to rotate a connector to a new position.

1. Mount and fully seat a mating cable on the motor connector.

   The connector provides a larger area to grasp and extends the leverage force.
2. Grasp the mated connector and cable plug with your hands and slowly rotate the motor connector into the new position.
3. Remove the cable plug after the connector is aligned.

Install the Motor

Perform these steps to install the motor.

ATTENTION: Damage can occur to the motor bearings and the feedback device if sharp impact is applied to the shaft during installation of couplings and pulleys. Damage to the feedback device can result if you apply leverage to the motor mounting face when you remove devices that are mounted on the motor shaft.

Do not strike the shaft, couplings, or pulleys with tools during installation or removal. Use a wheel puller, to apply pressure from the user end of the shaft, when attempting to remove any device from the motor shaft.

1. Provide sufficient clearance around the motor, and behind the cooling fan, for heat dissipation so the motor stays within its specified operating temperature range.

   See Environmental Ratings on page 28 for the operating temperature range. Do not enclose the motor. Keep other devices that produce heat away from the motor.
2. See Motor Load Force Ratings on page 15 to determine the radial and axial shaft load limitations of your motor.

   BURN HAZARD: Outer surfaces of the motor can reach a high temperature, 125 °C (257 °F), during motor operation.

   Take precautions to prevent accidental contact with hot surfaces. Consider motor surface temperature when you select motor mating connections and cables
3. If you are using the optional mounting feet, remove the cooling fan subassembly to gain access to the rear mounting feet.

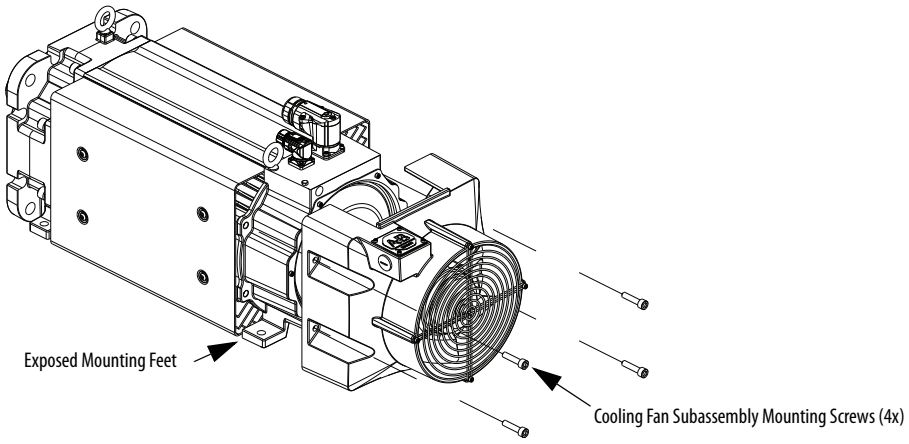

4. Mount and align the motor.

5. If you removed the cooling fan assembly, reattach the fan subassembly and torque the fan subassembly mounting screws to the values shown.

Cooling Fan Cat. No.	Mounting Screw Size	Torque N•m (lb•in)
VPC-FAN165	M5 x 0.8 x 20	4.1…4.9 (36…43)
VPC-FAN215	M6 x 1 x 25	6.9…8.3 (61…73)
VPC-FAN300	M8 x 1.25 x 35	16.6…20.2 (147…179)

6. Attach the motor cables that transmit the power, feedback, and brake signals.
   a. Carefully align the cable connector with the motor connector.

      The flat surface on the top of the motor connector and the flat surfaces on the cable connector must align for the cable connector to mate with the motor connector.

ATTENTION: Keyed connectors must be properly aligned and hand-tightened.

Do not use tools, or apply excessive force, when mating the cable to the motor connector. If the connectors do not go together with light hand force, realign and try again.

   b. Hand-tighten the knurled collar one-quarter turn to seat the cable connector fully.

ATTENTION: The overall shield on the single motor cable must be grounded to obtain an effective encoder signal.

The encoder data signal is transmitted through an impedance-matched twisted-wire pair that requires effective shielding for optimum performance.

Be sure that there is an effective connection between the single motor cable shield and the drive system ground.

   c. If applicable, form a drip loop in the cables to carry liquids away from the connectors.

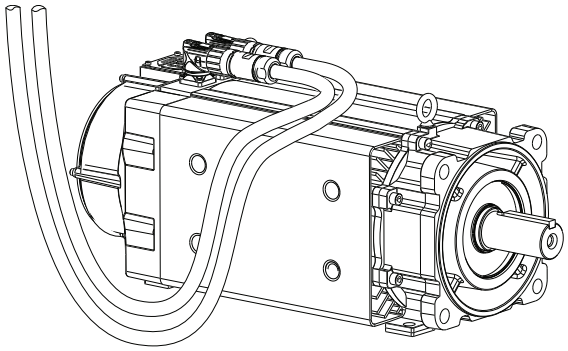

Drip loop for foot mounted motor with connectors on top.

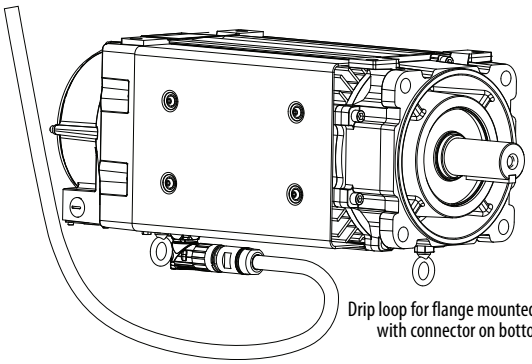

Drip loop for flange mounted motor with connector on bottom.

VPC-B165*xx*, VPC-B215*xx*, and VPC-B300*xx* Motor Dimensions (single connector, with fan)

Dimensions are in mm (in.)

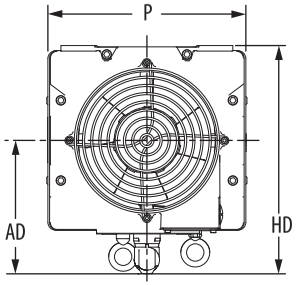

M23 Single Connector

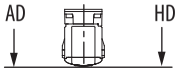

M40 Single Connector

M23 connector housings rotate 325°
M40 connector housings rotate 330°

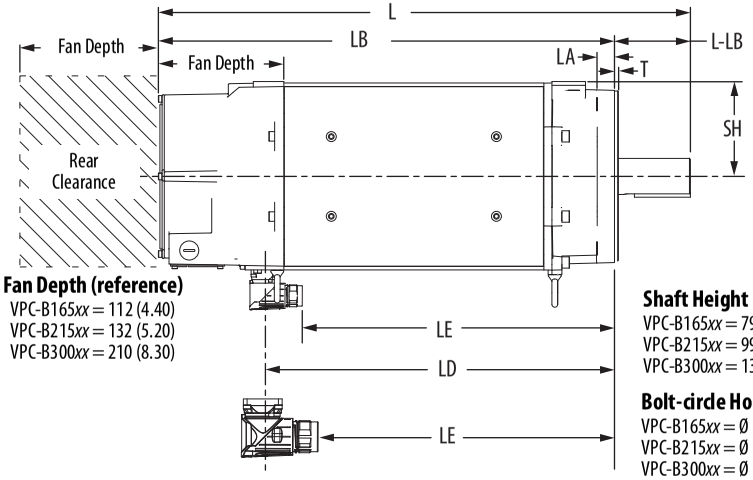

Fan Depth (reference)
VPC-B165*xx* = 112 (4.40)
VPC-B215*xx* = 132 (5.20)
VPC-B300*xx* = 210 (8.30)

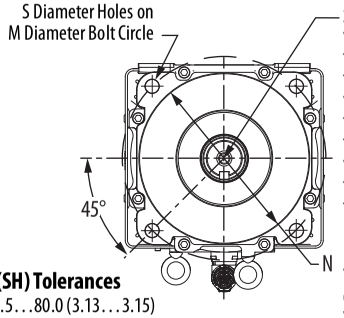

Shaft-end Threaded Hole
VPC-B165*xx* Motors:
Thread - M10 x 1.5-6H
Thread Depth - 22 (0.86)
VPC-B215*xx* Motors:
Thread - M12 x 1.75-6H
Thread Depth - 28 (1.10)
VPC-B300*xx* Motors:
Thread - M16 x 2-6H
Thread Depth - 36 (1.42)

Pilot Diameter (N) Tolerances
VPC-B165*xx* Motors:
Ø 129.898…130.014 (5.1177…5.1187)
VPC-B215*xx* Motors:
Ø 179.989…180.014 (7.0862…7.0871)
VPC-B300*xx* Motors:
Ø 249.987…250.016 (9.8420…9.8431)

Shaft Height (SH) Tolerances
VPC-B165*xx* = 79.5…80.0 (3.13…3.15)
VPC-B215*xx* = 99.8…100.0 (3.92…3.94)
VPC-B300*xx* = 131.5…132.0 (5.18….5.20)

Bolt-circle Hole Diameter (S) Tolerances
VPC-B165*xx* = Ø 12.00…12.43 (Ø 0.472…0.489)
VPC-B215*xx* = Ø 14.50…14.93 (Ø 0.571…0.588)
VPC-B300*xx* = Ø 18.50…19.02 (Ø 0.728…0.749)

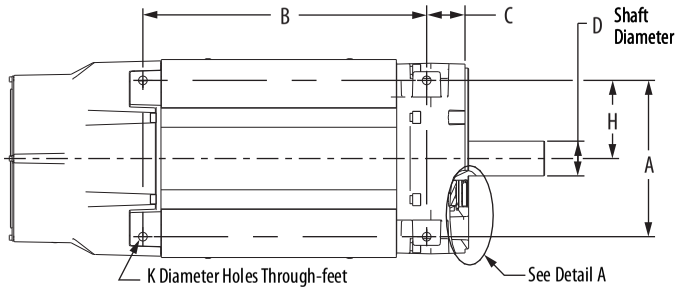

Foot-mounting Hole Diameter (K) Tolerances
VPC-B165*xx* = Ø 10.00…10.36 (Ø 0.394…0.408)
VPC-B215*xx* = Ø 12.00…12.43 (Ø 0.472…0.489)
VPC-B300*xx* = Ø 12.00…12.43 (Ø 0.472…0.489)

Shaft Diameter (D) Tolerances
VPC-B165*xx* = Ø 32.002…32.018 (1.2599…1.2605)
VPC-B215*xx* = Ø 38.002…38.015 (1.4961…1.4968)
VPC-B300*xx* = Ø 48.002…48.018 (1.8898…1.8905)

Shaft Detail with Key

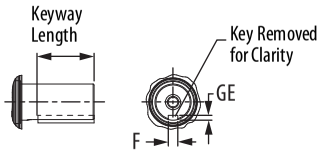

Key Supplied
VPC-B165*xx* = 10 $_{(+0,\ -0.036)}$ x 8 $_{(+0,\ -0.090)}$ x 59 Key
VPC-B215*xx* = 10 $_{(+0,\ -0.036)}$ x 8 $_{(+0,\ -0.090)}$ x 59 Key
VPC-B300*xx* = 14 $_{(+0,\ -0.043)}$ x 9 $_{(+0,\ -0.090)}$ x 79 Key

Keyway Length
VPC-B165*xx* = 60.0 (2.36)
VPC-B215*xx* = 60.0 (2.36)
VPC-B300*xx* = 81.0 (3.19)

Detail A

Shaft Seal
See page 28
for Kinetix VPC motor shaft seal kit information.

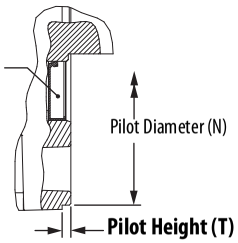

Pilot Height (T) Tolerances
VPC-B165*xx* = 2.5…3.5 (0.098…0.138)
VPC-B215*xx* = 3.0…4.0 (0.118…0.157)
VPC-B300*xx* = 3.5…5.0 (0.138…0.197)

Motor Connector on Kinetix VPC Motors		Motor Cat. No. (1)
M23 Connector		VPC-B1652*x* VPC-B1653*x* VPC-B2153*x* VPC-B21549
M40 Connector	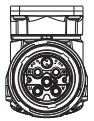	VPC-B1654D VPC-B2154A VPC-B2154B/D VPC-B2155B/D VPC-B2156A/D VPC-B30029 VPC-B3002A VPC-B30039 VPC-B3003A VPC-B30049

(1) Catalog numbers B/ and A/ represent rated speed for the fanless motor. /D represents rated speed for the fan motor.

Shaft, Pilot, and Keyway Tolerances	VPC-B165*xx*	VPC-B215*xx*	VPC-B300*xx*
Shaft Runout (T.I.R.)	0.05 (0.002)		
Pilot Eccentricity (T.I.R.)	0.10 (0.0039)		
Max Face Runout (T.I.R.)	0.10 (0.0039)		0.125 (0.0049)
Keyway Depth (GE)	5.0…5.2 (0.197…0.205)		5.5…5.7 (0.216…0.224)
Keyway Width (F)	9.964…10.000 (0.3923…0.3937		13.957…14.000 (0.5495…0.5512)

VPC-B165*xx*, VPC-B215*xx*, and VPC-B300*xx* Motor Dimensions (single connector)

Motor Cat. No. (1)	AD mm (in.)	HD mm (in.)	T (4) mm (in.)	LA mm (in.)	LD (2) mm (in.)	LE (2) mm (in.)	L (2) mm (in.)	LB (2) mm (in.)	L-LB (3) mm (in.)	A mm (in.)	B (2) mm (in.)	C mm (in.)	SH (4) mm (in.)	H mm (in.)	D (4) mm (in.)	M (4) mm (in.)	S (4) mm (in.)	K (4) mm (in.)	N (4) mm (in.)	P mm (in.)	GE (4) mm (in.)	F (4) mm (in.)
VPC-B1652*x*	120.5 (4.75)	200.3 (7.89)	3.5 (0.14)	14.3 (0.56)	251.9 (9.92)	211.9 (8.34)	427.6 (16.83)	347.6 (13.69)	80.0 (3.15)	125.0 (4.92)	216.9 (8.54)	34.0 (1.34)	80.0 (3.15)	62.5 (2.46)	32.00 (1.260)	165.00 (6.496)	12.00 (0.472)	10.00 (0.394)	130.00 (5.118)	168.9 (6.65)	5.00 (0.198)	10.00 (0.394)
VPC-B1653*x*					307.4 (12.10)	267.4 (10.53)	483.1 (19.02)	403.1 (15.87)			272.4 (10.72)											
VPC-B1654D	140.0 (5.51)	219.08 (8.65)			352.1 (13.86)	281.1 (11.07)	523.6 (20.61)	443.6 (17.46)			312.9 (12.32)											
VPC-B2153*x*	140.5 (5.53)	240.5 (9.47)	4.0 (0.16)	18.4 (0.72)	328.4 (12.93)	288.5 (11.36)	520.1 (20.48)	440.1 (17.33)	80.0 (3.15)	160.0 (6.30)	284.9 (11.22)	43.0 (1.69)	100.00 (3.94)	80.0 (3.15)	38.00 (1.496)	215.00 (8.465)	14.50 (0.571)	12.00 (0.472)	180.00 (7.087)	210.9 (8.30)	5.00 (0.198)	10.00 (0.394)
VPC-B21549					368.9 (14.52)	329.0 (12.95)	560.6 (22.07)	480.6 (18.92)			325.4 (12.81)											
VPC-B2154A	160.5 (6.32)	260.5 (10.25)				297.9 (11.73)																
VPC-B2154B/D																						
VPC-B2155B/D					409.4 (16.12)	338.4 (13.32)	601.1 (23.67)	521.1 (20.52)			365.9 (14.41)											
VPC-B2156A/D					449.9 (17.71)	378.9 (14.92)	641.6 (25.26)	561.6 (22.11)			406.4 (16.00)											
VPC-B3002*x*	192.0 (7.56)	324.0 (12.75)	5.0 (0.20)	22.9 (0.90)	400.7 (15.78)	329.7 (12.98)	692.1 (27.23)	582.1 (22.92)	110.0 (4.33)	216.0 (8.50)	344.7 (13.57)	53.0 (2.09)	132.00 (5.20)	108.0 (4.25)	48.00 (1.890)	300.00 (11.811)	18.50 (0.728)	12.00 (0.472)	250.00 (9.843)	275.9 (10.86)	5.50 (0.217)	14.00 (0.551)
VPC-B3003*x*																						
VPC-B30049					448.2 (17.65)	377.2 (14.85)	739.6 (29.12)	629.6 (24.79)			392.2 (15.44)											

(1) Catalog numbers /B and /A represent rated speed for the fanless motor. D/ represents rated speed for the fan motor.

(2) If ordering VPC-B1652*x* motors with brake, add 55.5 mm (2.19 in.) to dimension L, LB, LE, LD, and B.
If ordering VPC-B1653*x* or VPC-B1654D motors with brake, add 40.5 mm (1.59 in.) to dimension L, LB, LE, LD, and B.
If ordering VPC-B2153*x*, VPC-B2154*x*, or VPC-B2156A/D motors with brake, add 81.0 mm (3.19 in.) to dimension L, LB, LE, LD, and B.
If ordering VPC-B2155B/D motors with brake, add 121.5 mm (4.78 in.) to dimension L, LB, LE, LD, and B.
If ordering VPC-B3002*x* motors with brake, add 47.5 mm (1.87 in.) to dimension L, LB, LE, LD, and B.
If ordering VPC-B3003*x* motors with brake, add 95.0 mm (3.74 in.) to dimension L, LB, LE, LD, and B.
If ordering VPC-B3004*x* motors with brake, add 142.5 mm (5.61 in.) to dimension L, LB, LE, LD, and B.

(3) Tolerance for this dimension is ±0.7 mm (±0.028 in.).

(4) For shaft diameter, mounting hole diameter, pilot diameter, and keyway tolerances, See the figure on page 9.

Motors are designed to metric dimensions. Inch dimensions are approximate conversions from millimeters. Dimensions without tolerances are for reference.

VPC-B165*xx*, VPC-B215*xx*, and VPC-B300*xx* Motor Dimensions (motor power/feedback connectors, with fan)

Dimensions are in mm (in.)

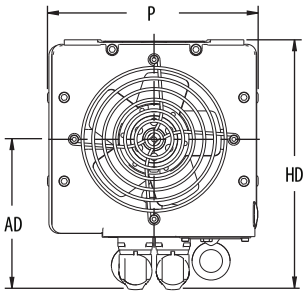

M23 Power/Brake and
M23 Feedback Connectors

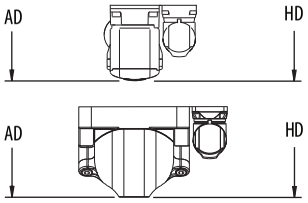

M23 and M40 connector housings rotate 180°.
M58 connector housings do not rotate.

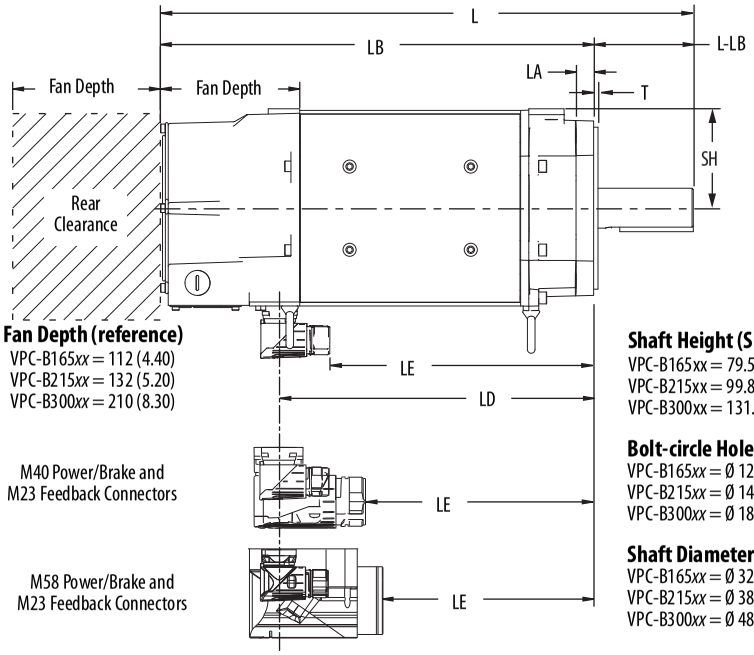

M40 Power/Brake and
M23 Feedback Connectors

M58 Power/Brake and
M23 Feedback Connectors

Fan Depth (reference)
VPC-B165*xx* = 112 (4.40)
VPC-B215*xx* = 132 (5.20)
VPC-B300*xx* = 210 (8.30)

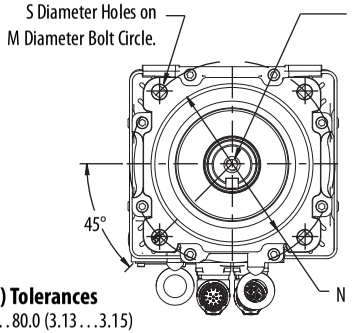

Shaft-end Threaded Hole
VPC-B165*xx* Motors:
Thread - M10 x 1.5-6H
Thread Depth - 22 (0.86)
VPC-B215*xx* Motors:
Thread - M12 x 1.75-6H
Thread Depth - 28 (1.10)
VPC-B300*xx* Motors:
Thread - M16 x 2.0-6H
Thread Depth - 36 (1.42)

Pilot Diameter (N) Tolerances
VPC-B165*xx* Motors:
Ø 129.989…130.014 (5.1177…5.1187)
VPC-B215*xx* Motors:
Ø 179.989…180.014 (7.0862…7.0871)
VPC-B300*xx* Motors:
Ø 249.987…250.016 (9.8420…9.8431)

Shaft Height (SH) Tolerances
VPC-B165*xx* = 79.5…80.0 (3.13…3.15)
VPC-B215*xx* = 99.8…100.0 (3.92…3.94)
VPC-B300*xx* = 131.5…132.0 (5.18….5.20)

Bolt-circle Hole Diameter (S) Tolerances
VPC-B165*xx* = Ø 12.00…12.43 (0.472…0.489)
VPC-B215*xx* = Ø 14.50…14.93 (0.571…0.588)
VPC-B300*xx* = Ø 18.50…19.02 (0.728…0.749)

Shaft Diameter (D) Tolerances
VPC-B165*xx* = Ø 32.018…32.002 (1.2605…1.2599)
VPC-B215*xx* = Ø 38.018…38.002 (1.4968…1.4961)
VPC-B300*xx* = Ø 48.018…48.002 (1.8905…1.8898)

Shaft Detail with Key

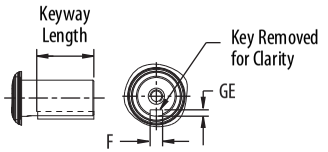

Key Supplied
VPC-B165*xx* = 10 $^{(+0,\ -0.036)}$ x 8 $^{(+0,\ -0.090)}$ x 59 Key
VPC-B215*xx* = 10 $^{(+0,\ -0.036)}$ x 8 $^{(+0,\ -0.090)}$ x 59 Key
VPC-B300*xx* = 14 $^{(+0,\ -0.043)}$ x 9 $^{(+0,\ -0.090)}$ x 79 Key

Keyway Length
VPC-B165*xx* = 60.0 (2.36)
VPC-B215*xx* = 60.0 (2.36)
VPC-B300*xx* = 81.0 (3.19)

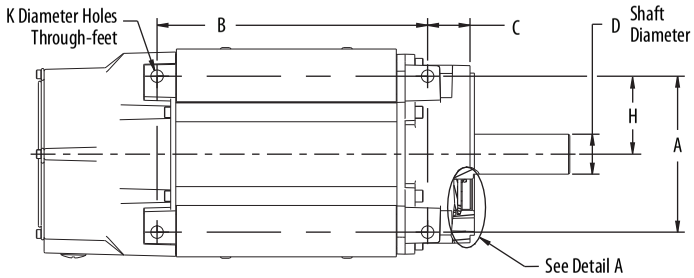

Foot-mounting Hole Diameter (K) Tolerances
VPC-B165*xx* = Ø 10.00…10.36 (0.394…0.408)
VPC-B215*xx* = Ø 12.00…12.43 (0.472…0.489)
VPC-B300*xx* = Ø 12.00…12.43 (0.472…0.489)

Detail A

Shaft Seal
See page 28
for Kinetix VPC motor
shaft seal kit information.

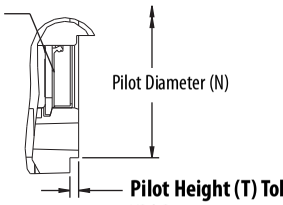

Pilot Height (T) Tolerances
VPC-B165*xx* = 2.5…3.5 (0.098…0.138)
VPC-B215*xx* = 3.0…4.0 (0.118…0.157)
VPC-B300*xx* = 3.5…5.0 (0.138…0.197)

Power/Brake Connectors on Kinetix VPC Motors		Motor Cat. No. (1)
M23 Connector		VPC-B1652*x* VPC-B1653*x* VPC-B2153*x* VPC-B21549
M40 Connector	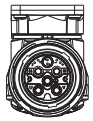	VPC-B1654D VPC-B2154A VPC-B2154B/D VPC-B2155B/D VPC-B2156A/D VPC-B3002*x* VPC-B3003*x* VPC-B30049
M58 Connector	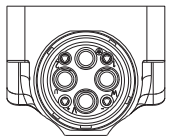	VPC-B3004A VPC-B3004B/D

(1) Catalog numbers B/ and A/ represent rated speed for the fanless motor. /D represents rated speed for the fan motor.

Shaft, Pilot, and Keyway Tolerances	VPC-B165*xx*	VPC-B215*xx*	VPC-B300*xx*
Shaft Runout (T.I.R.)	0.05 (0.002)		
Pilot Eccentricity (T.I.R.)	0.10 (0.0039)		
Max Face Runout (T.I.R.)	0.10 (0.0039)		0.125 (0.0049)
Keyway Depth (GE)	5.00…5.20 (0.197…0.205)		5.50…5.70 (0.216…0.224)
Keyway Width (F)	9.964…10.000 (0.3927…0.3937)		13.957…14.000 (0.5495…0.5512)

VPC-B165*xx*, VPC-B215*xx*, and VPC-B300*xx* Motor Dimensions (motor power/feedback connectors)

Motor Cat. No. (1)	AD mm (in.)	HD mm (in.)	T (4) mm (in.)	LA mm (in.)	LD (2) mm (in.)	LE (2) mm (in.)	L (2) mm (in.)	LB (2) mm (in.)	L-LB (3) mm (in.)	A mm (in.)	B (2) mm (in.)	C mm (in.)	SH (4) mm (in.)	H mm (in.)	D (4) mm (in.)	M (4) mm (in.)	S (4) mm (in.)	K (4) mm (in.)	N (4) mm (in.)	P mm (in.)	GE (4) mm (in.)	F (4) mm (in.)
VPC-B1652*x*	120.5 (4.75)	200.3 (7.89)	3.5 (0.14)	14.3 (0.56)	251.9 (9.92)	211.9 (8.34)	427.6 (16.83)	347.6 (13.69)	80.0 (3.15)	125.0 (4.92)	216.9 (8.54)	34.0 (1.34)	80.0 (3.15)	62.5 (2.46)	32.0 (1.260)	165.0 (6.496)	12.00 (0.472)	10.00 (0.394)	130.0 (5.118)	168.9 (6.65)	5.00 (0.198)	10.00 (0.394)
VPC-B1653*x*					307.4 (12.10)	267.4 (10.53)	483.1 (19.02)	403.1 (15.87)			272.4 (10.72)											
VPC-B1654D	140.0 (5.51)	219.9 (8.66)			352.1 (13.86)	281.1 (11.07)	523.6 (20.61)	443.6 (17.46)			312.9 (12.32)											
VPC-B2153*x*	140.5 (5.53)	240.5 (9.47)	4.0 (0.16)	18.4 (0.72)	328.4 (12.93)	288.5 (11.40)	520.1 (20.48)	440.1 (17.33)	80.0 (3.15)	160.0 (6.30)	284.9 (11.22)	43.0 (1.69)	100.00 (3.94)	80.00 (3.15)	38.00 (1.496)	215.00 (8.465)	14.50 (0.571)	12.00 (0.472)	180.00 (7.087)	210.9 (8.30)	5.00 (0.198)	10.00 (0.394)
VPC-B21549					368.9 (14.52)	329.0 (12.95)	560.6 (22.07)	480.6 (18.92)			325.4 (12.81)											
VPC-B2154A	160.1 (6.30)	260.1 (10.24)				297.9 (11.73)																
VPC-B2154B/D																						
VPC-B2155B/D					409.4 (16.12)	338.4 (13.32)	601.1 (23.67)	521.1 (20.52)			365.9 (14.41)											
VPC-B2156A/D					449.9 (17.71)	378.9 (14.92)	641.6 (25.26)	561.6 (22.11)			406.4 (16.00)											
VPC-B3002*x*	192.0 (7.56)	324.0 (12.76)	5.0 (0.20)	22.9 (0.90)	400.7 (15.78)	329.7 (12.98)	692.1 (27.23)	582.1 (22.92)	110.0 (4.33)	216.0 (8.50)	344.7 (13.57)	53.0 (2.09)	132.00 (5.20)	108.0 (4.25)	48.00 (1.890)	300.00 (11.811)	18.50 (0.728)	12.00 (0.472)	250.00 (9.843)	275.9 (10.86)	5.50 (0.217)	14.00 (0.551)
VPC-B3003*x*																						
VPC-B30049					448.2 (17.65)	377.2 (14.85)	739.6 (29.12)	629.6 (24.79)			392.2 (15.44)											
VPC-B3004A	203.3 (8.00)	335.3 (13.2)				400.2 (15.76)																
VPC-B3004B/D																						

(1) Catalog numbers /B and /A represent rated speed for the fanless motor. D/ represents rated speed for the fan motor.

(2) If ordering VPC-B1652*x* motors with brake, add 55.5 mm (2.19 in.) to dimension L, LB, LE, LD, and B.
If ordering VPC-B1653*x* or VPC-B1654D motors with brake, add 40.5 mm (1.59 in.) to dimension L, LB, LE, LD, and B.
If ordering VPC-B2153*x*, VPC-B2154*x* or VPC-B2156A/D motors with brake, add 81.0 mm (3.19 in.) to dimension L, LB, LE, LD, and B.
If ordering VPC-B2155B/D motors with brake, add 121.5 mm (4.78 in.) to dimension L, LB, LE, LD, and B.
If ordering VPC-B3002*x* motors with brake, add 47.5 mm (1.87 in.) to dimension L, LB, LE, LD, and B.
If ordering VPC-B3003*x* motors with brake, add 95.0 mm (3.74 in.) to dimension L, LB, LE, LD, and B.
If ordering VPC-B3004*x* motors with brake, add 142.5 mm (5.61 in.) to dimension L, LB, LE, LD, and B.

(3) Tolerance for this dimension is ±0.7 mm (±0.028 in.).

(4) For shaft diameter, mounting hole diameter, pilot diameter, and keyway tolerances, see the figure on page 11.

Motors are designed to metric dimensions. Inch dimensions are approximate conversions from millimeters. Dimensions without tolerances are for reference.

VPC-B165*xx*, VPC-B215*xx*, and VPC-B300*xx* Motor Dimensions (without fan)

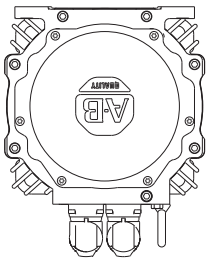

M23 Power/Brake and
M23 Feedback Connectors

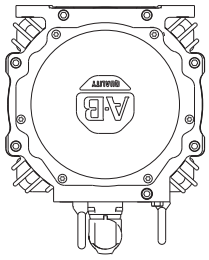

M23 Single Connector

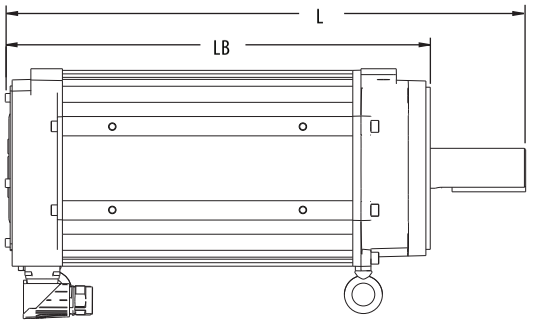

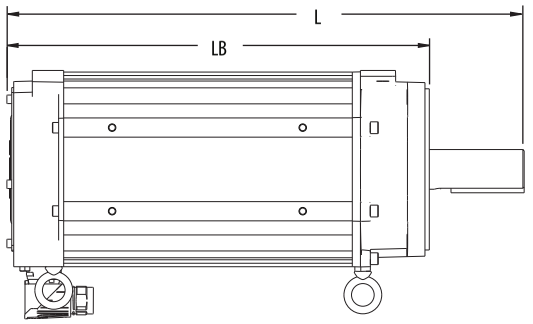

Dimensions are in mm (in.)

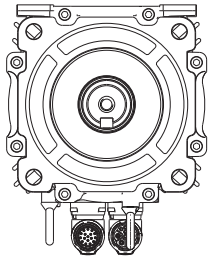

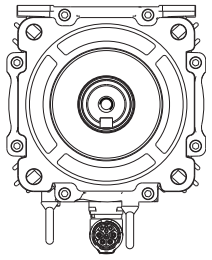

Motor Cat. No. (1)	L (2) mm (in.)	LB (2) mm (in.)
VPC-B1652*x*	361.7 (14.24)	281.7 (11.09)
VPC-B1653*x*	417.2 (16.43)	337.2 (13.27)
VPC-B1654D	457.7 (18.02)	377.7 (14.87)
VPC-B2153*x*	434.0 (17.09)	354.0 (13.93)
VPC-B21549	474.5 (18.68)	394.5 (15.53)
VPC-B2154A		
VPC-B2154B/D		

Motor Cat. No.	L (2) mm (in.)	LB (2) mm (in.)
VPC-B2155B/D	515.0 (20.28)	435.0 (17.13)
VPC-B2156A/D	555.5 (21.87)	475.5 (18.72)
VPC-B3002*x*	578.8 (22.79)	468.8 (18.46)
VPC-B3003*x*	578.6 (22.78)	468.6 (18.45)
VPC-B30049	626.3 (24.66)	516.3 (20.32)
VPC-B3004A		
VPC-B3004B/D		

(1) Catalog numbers B/ and A/ represent rated speed for the fanless motor. /D represents rated speed for the fan motor.

(2) If ordering VPC-B1652*x* motors with brake, add 55.5 mm (2.19 in.) to dimension L and LB.
If ordering VPC-B1653*x* or VPC-B1654D motors with brake, add 40.5 mm (1.59 in.) to dimension L and LB.
If ordering VPC-B2153*x*, VPC-B2154*x* or VPC-B2156A/D motors with brake, add 81.0 mm (3.19 in.) to dimension L and LB.
If ordering VPC-B2155B/D motors with brake, add 121.5 mm (4.78 in.) to dimension L and LB.
If ordering VPC-B3002*x* motors with brake, add 47.5 mm (1.87 in.) to dimension L and LB.
If ordering VPC-B3003*x* motors with brake, add 95.0 mm (3.74 in.) to dimension L and LB.
If ordering VPC-B3004*x* motors with brake, add 142.5 mm (5.61 in.) to dimension L and LB.

Connector Data

This section identifies the power, feedback, and brake pins on the motor connectors.

Single Motor Connector Pinouts

Pin	M23 Signal Description
A	Phase U
B	Phase V
C	Phase W
⏚	Ground
E	DATA+
F	MBRK+
G	MBRK -
H	DATA -
L	Reserved

M23 Single Connector

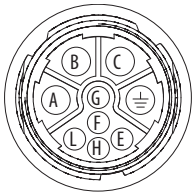

Pin	M40 Signal Description
U	Phase U
V	Phase V
W	Phase W
⏚	Ground
1	MBRK+
2	MBRK-
L	DATA+
H	DATA-
+	–
–	–
N	–

M40 Single Connector

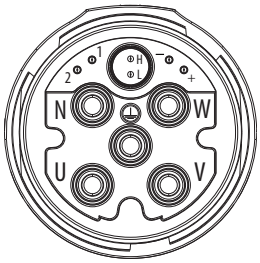

Motor Power/Brake Connector Pinouts

Pin	M23 Signal Description
A	Phase U
B	Phase V
C	Phase W
⏚	Ground
E	Reserved
F	MBRK+
G	MBRK-
H	Reserved
L	

M23 Single Connector

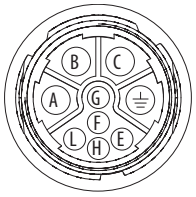

Pin	M40/M58 Signal Description
U	Phase U
V	Phase V
W	Phase W
⏚	Ground
+	MBRK+
-	MBRK-
1	Reserved
2	

M40 Motor Power/Brake Connector

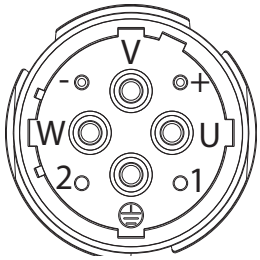

M58 Motor Power/Brake Connector

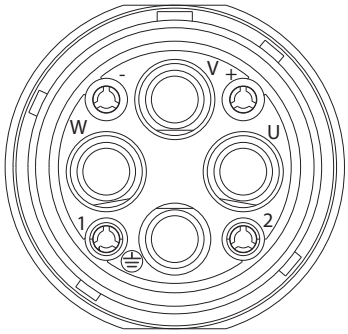

Feedback Connector Pinouts

Pin	Option S/M Encoder (1)	Option Y Encoder (2)
1	SIN+	Reserved
2	SIN-	
3	COS+	CLOCK +
4	COS-	CLOCK -
5	DATA+	DATA+
6	DATA-	DATA-
7	Reserved	Reserved
8		
9		EPWR_5 V
10		ECOM

Pin	Option S/M Encoder (1)	Option Y Encoder (2)
11	EPWR_9V	Reserved
12	ECOM	ECOM
13	TS+	TS+
14	TS-	TS-
15	Reserved	Reserved
16		
17		

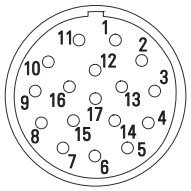

M23 Feedback Connector

(1) 1024 sin/cos, absolute single-turn encoder (Hiperface protocol).
(2) 25-bit, absolute multi-turn digital encoder (EnDat digital protocol).

Cooling Fan Terminal Box Descriptions

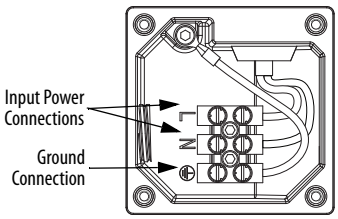

VPC-B165*xx* Motors

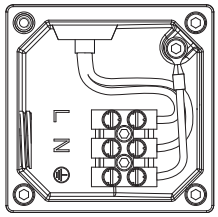
VPC-B215*xx* Motors

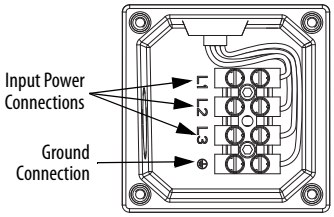

VPC-B300*xx* Motors

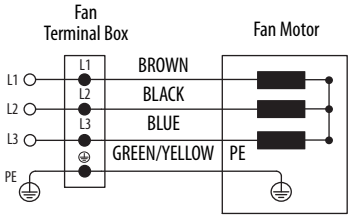

VPC-FAN300 Terminal Box Wiring

IMPORTANT The VPC-F300 fan blade rotation must match the direction noted on the cooling fan nameplate attached to the fan shroud. If the blade rotation does not match the markings on the nameplate, swap any two power wires (L1, L2, or L3), to reverse the fan blade rotation.

Cooling Fan Specifications

Attribute	VPC-FAN165	VPC-FAN215	VPC-FAN300
Voltage	208/240V AC rms, 1 PH	208/240V AC rms, 1 PH	400/480V AC rms, 3 PH
Current	0.12 A rms	0.30 A rms	0.18 A rms
Frequency	50/60 Hz	50/60 Hz	50/60 Hz

See the Kinetix VPC Continuous-duty Motor Fan Kits Installation Instructions, publication VPC-IN002, for more cooling fan information.

Motor Load Force Ratings

Motors can operate with a sustained shaft load. The location and direction of radial and axial load forces are shown in the figure, and maximum load rating values are in the tables.

Load Forces on Shaft

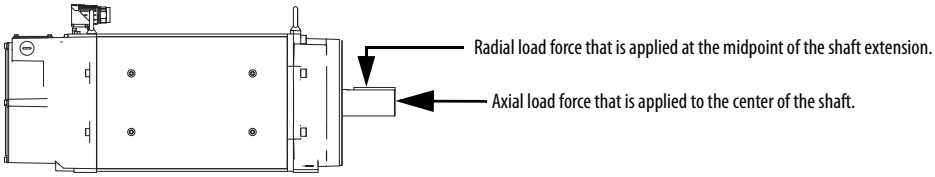

The following tables represent 20,000-hour and 40,000-hour L10 bearing fatigue life at various loads and speeds. The 20,000-hour and 40,000-hour bearing life does not account for possible application-specific life reduction, such as bearing grease contamination from external sources.

Kinetix VPC Servo Motors (20,000 hours bearing-fatigue life)

Radial Load Force Ratings (maximum) for Non-brake Motors

Motor Cat. No. (1)	Maximum (2) Speed rpm	RPM									
		500 N (lb)	1000 N (lb)	1500 N (lb)	2000 N (lb)	2500 N (lb)	3000 N (lb)	3500 N (lb)	4000 N (lb)	4500 N (lb)	5000 N (lb)
VPC-B1652A	4500	2719 (611.3)	2158 (485.2)	1885 (423.8)	1713 (385.1)	1590 (357.5)	1496 (336.4)	1421 (319.5)	1359 (305.6)	1307 (293.9)	–
VPC-B1653A	4500	2871 (645.5)	2279 (512.3)	1991 (447.6)	1809 (406.6)	1679 (377.5)	1580 (355.2)	1501 (337.4)	1436 (322.7)	1380 (310.3)	–
VPC-B1652D	5000	2719 (611.3)	2158 (485.2)	1885 (423.8)	1713 (385.1)	1590 (357.5)	1496 (336.4)	1421 (319.5)	1359 (305.6)	1307 (293.9)	1262 (283.7)
VPC-B1653D	5000	2871 (645.5)	2279 (512.3)	1991 (447.6)	1809 (406.6)	1679 (377.5)	1580 (355.2)	1501 (337.4)	1436 (322.7)	1380 (310.3)	1333 (299.6)
VPC-B1654D	5000	2952 (663.7)	2343 (526.7)	2047 (460.2)	1860 (418.1)	1726 (388.1)	1625 (365.2)	1543 (346.9)	1476 (331.8)	1419 (319.1)	1370 (308.0)
VPC-B21539	3000	3763 (846.1)	2987 (671.5)	2609 (586.6)	2371 (533.0)	2201 (494.8)	2071 (465.6)	–	–	–	–
VPC-B21549	3000	3862 (868.3)	3066 (689.2)	2678 (602.0)	2433 (547.0)	2259 (507.8)	2126 (477.8)	–	–	–	–
VPC-B2153A	4500	3763 (846.1)	2987 (671.5)	2609 (586.6)	2371 (533.0)	2201 (494.8)	2071 (465.6)	1967 (442.3)	1882 (423.0)	1809 (406.7)	–
VPC-B2154A	4500	3862 (868.3)	3066 (689.2)	2678 (602.0)	2433 (547.0)	2259 (507.8)	2126 (477.8)	2019 (453.9)	1931 (434.1)	1857 (417.4)	–
VPC-B2154B	3200	3862 (868.3)	3066 (689.2)	2678 (602.0)	2433 (547.0)	2259 (507.8)	2126 (477.8)	–	–	–	–
VPC-B2154D	5000	3862 (868.3)	3066 (689.2)	2678 (602.0)	2433 (547.0)	2259 (507.8)	2126 (477.8)	2019 (453.9)	1931 (434.1)	1857 (417.4)	1793 (403.0)
VPC-B2155B	3200	3941 (886.1)	3128 (703.3)	2733 (614.4)	2483 (558.2)	2305 (518.2)	2169 (487.6)	–	–	–	–
VPC-B2155D	5000	3941 (886.1)	3128 (703.3)	2733 (614.4)	2483 (558.2)	2305 (518.2)	2169 (487.6)	2060 (463.2)	1971 (443.0)	1895 (426.0)	1829 (411.3)
VPC-B2156A	2800	4006 (900.6)	3180 (714.8)	2778 (624.4)	2524 (567.3)	2343 (526.7)	–	–	–	–	–
VPC-B2156D	5000	4006 (900.6)	3180 (714.8)	2778 (624.4)	2524 (567.3)	2343 (526.7)	2205 (495.6)	2094 (470.8)	2003 (450.3)	1926 (433.0)	1859 (418.0)
VPC-B30029	3000	5702 (1282.0)	4526 (1017.5)	3954 (888.9)	3592 (807.6)	3335 (749.7)	3138 (705.5)	–	–	–	–
VPC-B30039	3000	5702 (1282.0)	4526 (1017.5)	3954 (888.9)	3592 (807.6)	3335 (749.7)	3138 (705.5)	–	–	–	–
VPC-B30049	3000	5861 (1317.7)	4652 (1045.9)	4064 (913.6)	3692 (830.1)	3428 (770.6)	3226 (725.2)	–	–	–	–
VPC-B3002A	4000	5702 (1282.0)	4526 (1017.5)	3954 (888.9)	3592 (807.6)	3335 (749.7)	3138 (705.5)	2981 (670.2)	2851 (641.0)	–	–
VPC-B3003A	3500	5702 (1282.0)	4526 (1017.5)	3954 (888.9)	3592 (807.6)	3335 (749.7)	3138 (705.5)	2981 (670.2)	–	–	–
VPC-B3004A	3500	5861 (1317.7)	4652 (1045.9)	4064 (913.6)	3692 (830.1)	3428 (770.6)	3226 (725.2)	3064 (688.8)	–	–	–
VPC-B3004B	2800	5861 (1317.7)	4652 (1045.9)	4064 (913.6)	3692 (830.1)	3428 (770.6)	–	–	–	–	–
VPC-B3004D	4000	5861 (1317.7)	4652 (1045.9)	4064 (913.6)	3692 (830.1)	3428 (770.6)	3226 (725.2)	3064 (688.8)	2931 (658.8)	–	–

(1) 1.0 N = 0.225 lb

(2) For Kinetix VPC bus overvoltage speed with and without a cooling fan, see Kinetix Rotary Motion Specifications Technical Data, publication KNX-TD001.

Axial Load Force Ratings (maximum radial load) for Non-brake Motors

Motor Cat. No. (1)	Maximum (2) Speed rpm	RPM									
		500 N (lb)	1000 N (lb)	1500 N (lb)	2000 N (lb)	2500 N (lb)	3000 N (lb)	3500 N (lb)	4000 N (lb)	4500 N (lb)	5000 N (lb)
VPC-B1652A	4500	927 (208.4)	686 (154.2)	575 (129.3)	508 (114.1)	461 (103.6)	426 (95.7)	398 (89.5)	376 (84.4)	357 (80.2)	–
VPC-B1653A	4500	927 (208.4)	686 (154.2)	575 (129.3)	508 (114.1)	461 (103.6)	426 (95.7)	398 (89.5)	376 (84.4)	357 (80.2)	–
VPC-B1652D	5000	927 (208.4)	686 (154.2)	575 (129.3)	508 (114.1)	461 (103.6)	426 (95.7)	398 (89.5)	376 (84.4)	357 (80.2)	341 (76.6)
VPC-B1653D	5000	927 (208.4)	686 (154.2)	575 (129.3)	508 (114.1)	461 (103.6)	426 (95.7)	398 (89.5)	376 (84.4)	357 (80.2)	341 (76.6)
VPC-B1654D	5000	927 (208.4)	686 (154.2)	575 (129.3)	508 (114.1)	461 (103.6)	426 (95.7)	398 (89.5)	376 (84.4)	357 (80.2)	341 (76.6)
VPC-B21539	3000	1196 (269.0)	885 (199.0)	742 (166.9)	655 (147.3)	594 (133.6)	549 (123.5)	–	–	–	–
VPC-B21549	3000	1196 (269.0)	885 (199.0)	742 (166.9)	655 (147.3)	594 (133.6)	549 (123.5)	–	–	–	–
VPC-B2153A	4500	1196 (269.0)	885 (199.0)	742 (166.9)	655 (147.3)	594 (133.6)	549 (123.5)	514 (115.5)	485 (109.0)	460 (103.5)	–
VPC-B2154A	4500	1196 (269.0)	885 (199.0)	742 (166.9)	655 (147.3)	594 (133.6)	549 (123.5)	514 (115.5)	485 (109.0)	460 (103.5)	–
VPC-B2154B	3200	1196 (269.0)	885 (199.0)	742 (166.9)	655 (147.3)	594 (133.6)	549 (123.5)	–	–	–	–
VPC-B2154D	5000	1196 (269.0)	885 (199.0)	742 (166.9)	655 (147.3)	594 (133.6)	549 (123.5)	514 (115.5)	485 (109.0)	460 (103.5)	440 (98.9)
VPC-B2155B	3200	1196 (269.0)	885 (199.0)	742 (166.9)	655 (147.3)	594 (133.6)	549 (123.5)	–	–	–	–
VPC-B2155D	5000	1196 (269.0)	885 (199.0)	742 (166.9)	655 (147.3)	594 (133.6)	549 (123.5)	514 (115.5)	485 (109.0)	460 (103.5)	440 (98.9)
VPC-B2156A	2800	1196 (269.0)	885 (199.0)	742 (166.9)	655 (147.3)	594 (133.6)	–	–	–	–	–
VPC-B2156D	5000	1196 (269.0)	885 (199.0)	742 (166.9)	655 (147.3)	594 (133.6)	549 (123.5)	514 (115.5)	485 (109.0)	460 (103.5)	440 (98.9)
VPC-B30029	3000	1820 (409.2)	1347 (302.8)	1129 (253.9)	997 (224.1)	905 (203.3)	836 (187.9)	–	–	–	–
VPC-B30039	3000	1820 (409.2)	1347 (302.8)	1129 (253.9)	997 (224.1)	905 (203.3)	836 (187.9)	–	–	–	–
VPC-B30049	3000	1820 (409.2)	1347 (302.8)	1129 (253.9)	997 (224.1)	905 (203.3)	836 (187.9)	–	–	–	–
VPC-B3002A	4000	1820 (409.2)	1347 (302.8)	1129 (253.9)	997 (224.1)	905 (203.3)	836 (187.9)	782 (175.7)	737 (165.8)	–	–
VPC-B3003A	3500	1820 (409.2)	1347 (302.8)	1129 (253.9)	997 (224.1)	905 (203.3)	836 (187.9)	782 (175.7)	–	–	–
VPC-B3004A	3500	1820 (409.2)	1347 (302.8)	1129 (253.9)	997 (224.1)	905 (203.3)	836 (187.9)	782 (175.7)	–	–	–
VPC-B3004B	2800	1820 (409.2)	1347 (302.8)	1129 (253.9)	997 (224.1)	905 (203.3)	–	–	–	–	–
VPC-B3004D	4000	1820 (409.2)	1347 (302.8)	1129 (253.9)	997 (224.1)	905 (203.3)	836 (187.9)	782 (175.7)	737 (165.8)	–	–

(1) 1.0 N = 0.225 lb

(2) For Kinetix VPC bus overvoltage speed with and without a cooling fan, see Kinetix Rotary Motion Specifications Technical Data, publication KNX-TD001.

Axial Load Force Ratings (zero radial load) for Non-brake Motors

Motor Cat. No. (1)	Maximum (2) Speed rpm	RPM									
		500 N (lb)	1000 N (lb)	1500 N (lb)	2000 N (lb)	2500 N (lb)	3000 N (lb)	3500 N (lb)	4000 N (lb)	4500 N (lb)	5000 N (lb)
VPC-B1652A	4500	2713 (610.0)	2008 (451.5)	1684 (378.6)	1486 (334.1)	1349 (303.3)	1246 (280.2)	1166 (262.1)	1100 (247.3)	1045 (235.0)	–
VPC-B1653A	4500	2713 (610.0)	2008 (451.5)	1684 (378.6)	1486 (334.1)	1349 (303.3)	1246 (280.2)	1166 (262.1)	1100 (247.3)	1045 (235.0)	–
VPC-B1652D	5000	2713 (610.0)	2008 (451.5)	1684 (378.6)	1486 (334.1)	1349 (303.3)	1246 (280.2)	1166 (262.1)	1100 (247.3)	1045 (235.0)	998 (224.5)
VPC-B1653D	5000	2713 (610.0)	2008 (451.5)	1684 (378.6)	1486 (334.1)	1349 (303.3)	1246 (280.2)	1166 (262.1)	1100 (247.3)	1045 (235.0)	998 (224.5)
VPC-B1654D	5000	2713 (610.0)	2008 (451.5)	1684 (378.6)	1486 (334.1)	1349 (303.3)	1246 (280.2)	1166 (262.1)	1100 (247.3)	1045 (235.0)	998 (224.5)
VPC-B21539	3000	3502 (787.3)	2592 (582.7)	2174 (488.6)	1918 (431.3)	1741 (391.4)	1609 (361.6)	–	–	–	–
VPC-B21549	3000	3502 (787.3)	2592 (582.7)	2174 (488.6)	1918 (431.3)	1741 (391.4)	1609 (361.6)	–	–	–	–
VPC-B2153A	4500	3502 (787.3)	2592 (582.7)	2174 (488.6)	1918 (431.3)	1741 (391.4)	1609 (361.6)	1505 (338.2)	1420 (319.2)	1349 (303.3)	–
VPC-B2154A	4500	3502 (787.3)	2592 (582.7)	2174 (488.6)	1918 (431.3)	1741 (391.4)	1609 (361.6)	1505 (338.2)	1420 (319.2)	1349 (303.3)	–
VPC-B2154B	3200	3502 (787.3)	2592 (582.7)	2174 (488.6)	1918 (431.3)	1741 (391.4)	1609 (361.6)	–	–	–	–
VPC-B2154D	5000	3502 (787.3)	2592 (582.7)	2174 (488.6)	1918 (431.3)	1741 (391.4)	1609 (361.6)	1505 (338.2)	1420 (319.2)	1349 (303.3)	1289 (289.7)
VPC-B2155B	3200	3502 (787.3)	2592 (582.7)	2174 (488.6)	1918 (431.3)	1741 (391.4)	1609 (361.6)	–	–	–	–
VPC-B2155D	5000	3502 (787.3)	2592 (582.7)	2174 (488.6)	1918 (431.3)	1741 (391.4)	1609 (361.6)	1505 (338.2)	1420 (319.2)	1349 (303.3)	1289 (289.7)
VPC-B2156A	2800	3502 (787.3)	2592 (582.7)	2174 (488.6)	1918 (431.3)	1741 (391.4)	–	–	–	–	–
VPC-B2156D	5000	3502 (787.3)	2592 (582.7)	2174 (488.6)	1918 (431.3)	1741 (391.4)	1609 (361.6)	1505 (338.2)	1420 (319.2)	1349 (303.3)	1289 (289.7)
VPC-B30029	3000	5329 (1198.0)	3944 (886.6)	3307 (743.5)	2919 (656.2)	2649 (595.6)	2448 (550.3)	–	–	–	–
VPC-B30039	3000	5329 (1198.0)	3944 (886.6)	3307 (743.5)	2919 (656.2)	2649 (595.6)	2448 (550.3)	–	–	–	–
VPC-B30049	3000	5329 (1198.0)	3944 (886.6)	3307 (743.5)	2919 (656.2)	2649 (595.6)	2448 (550.3)	–	–	–	–
VPC-B3002A	4000	5329 (1198.0)	3944 (886.6)	3307 (743.5)	2919 (656.2)	2649 (595.6)	2448 (550.3)	2289 (514.7)	2160 (485.7)	–	–
VPC-B3003A	3500	5329 (1198.0)	3944 (886.6)	3307 (743.5)	2919 (656.2)	2649 (595.6)	2448 (550.3)	2289 (514.7)	–	–	–
VPC-B3004A	3500	5329 (1198.0)	3944 (886.6)	3307 (743.5)	2919 (656.2)	2649 (595.6)	2448 (550.3)	2289 (514.7)	–	–	–
VPC-B3004B	2800	5329 (1198.0)	3944 (886.6)	3307 (743.5)	2919 (656.2)	2649 (595.6)	–	–	–	–	–
VPC-B3004D	4000	5329 (1198.0)	3944 (886.6)	3307 (743.5)	2919 (656.2)	2649 (595.6)	2448 (550.3)	2289 (514.7)	2160 (485.7)	–	–

(1) 1.0 N = 0.225 lb

(2) For Kinetix VPC bus overvoltage speed with and without a cooling fan, see Kinetix Rotary Motion Specifications Technical Data, publication KNX-TD001.

Radial Load Force Ratings (maximum) for Brake Motors

Motor Cat. No. [1]	Maximum [2] Speed rpm	RPM									
		500 N (lb)	1000 N (lb)	1500 N (lb)	2000 N (lb)	2500 N (lb)	3000 N (lb)	3500 N (lb)	4000 N (lb)	4500 N (lb)	5000 N (lb)
VPC-B1652A	4500	2871 (645.5)	2279 (512.3)	1991 (447.6)	1809 (406.6)	1679 (377.5)	1580 (355.2)	1501 (337.4)	1436 (322.7)	1380 (310.3)	–
VPC-B1653A	4500	2952 (663.7)	2343 (526.7)	2047 (460.2)	1860 (418.1)	1726 (388.1)	1625 (365.2)	1543 (346.9)	1476 (331.8)	1419 (319.1)	–
VPC-B1652D	5000	2871 (645.5)	2279 (512.3)	1991 (447.6)	1809 (406.6)	1679 (377.5)	1580 (355.2)	1501 (337.4)	1436 (322.7)	1380 (310.3)	1333 (299.6)
VPC-B1653D	5000	2952 (663.7)	2343 (526.7)	2047 (460.2)	1860 (418.1)	1726 (388.1)	1625 (365.2)	1543 (346.9)	1476 (331.8)	1419 (319.1)	1370 (308.0)
VPC-B1654D	5000	3016 (678.1)	2394 (538.2)	2091 (470.2)	1900 (427.2)	1764 (396.5)	1660 (373.2)	1577 (354.5)	1508 (339.0)	1450 (326.0)	1400 (314.7)
VPC-B21539	3000	3941 (886.1)	3128 (703.3)	2733 (614.4)	2483 (558.2)	2305 (518.2)	2169 (487.6)	–	–	–	–
VPC-B21549	3000	4006 (900.6)	3180 (714.8)	2778 (624.4)	2524 (567.3)	2343 (526.7)	2205 (495.6)	–	–	–	–
VPC-B2153A	4500	3941 (886.1)	3128 (703.3)	2733 (614.4)	2483 (558.2)	2305 (518.2)	2169 (487.6)	2060 (463.2)	1971 (443.0)	1895 (426.0)	–
VPC-B2154A	4500	4006 (900.6)	3180 (714.8)	2778 (624.4)	2524 (567.3)	2343 (526.7)	2205 (495.6)	2094 (470.8)	2003 (450.3)	1926 (433.0)	–
VPC-B2154B	3200	4006 (900.6)	3180 (714.8)	2778 (624.4)	2524 (567.3)	2343 (526.7)	2205 (495.6)	–	–	–	–
VPC-B2154D	5000	4006 (900.6)	3180 (714.8)	2778 (624.4)	2524 (567.3)	2343 (526.7)	2205 (495.6)	2094 (470.8)	2003 (450.3)	1926 (433.0)	1859 (418.0)
VPC-B2155B	3200	4106 (923.0)	3259 (732.5)	2847 (639.9)	2586 (581.4)	2401 (539.7)	2259 (507.9)	–	–	–	–
VPC-B2155D	5000	4106 (923.0)	3259 (732.5)	2847 (639.9)	2586 (581.4)	2401 (539.7)	2259 (507.9)	2146 (482.5)	2053 (461.5)	1974 (443.7)	1906 (428.4)
VPC-B2156A	2800	4106 (923.0)	3259 (732.5)	2847 (639.9)	2586 (581.4)	2401 (539.7)	–	–	–	–	–
VPC-B2156D	5000	4106 (923.0)	3259 (732.5)	2847 (639.9)	2586 (581.4)	2401 (539.7)	2259 (507.9)	2146 (482.5)	2053 (461.5)	1974 (443.7)	1906 (428.4)
VPC-B30029	3000	5861 (1317.7)	4652 (1045.9)	4064 (913.6)	3692 (830.1)	3428 (770.6)	3226 (725.2)	–	–	–	–
VPC-B30039	3000	5990 (1346.5)	4754 (1068.7)	4153 (933.6)	3773 (848.3)	3503 (787.5)	3296 (741.0)	–	–	–	–
VPC-B30049	3000	6184 (1390.2)	4908 (1103.4)	4288 (963.9)	3896 (875.8)	3616 (813.0)	3403 (765.1)	–	–	–	–
VPC-B3002A	4000	5861 (1317.7)	4652 (1045.9)	4064 (913.6)	3692 (830.1)	3428 (770.6)	3226 (725.2)	3064 (688.8)	2931 (658.8)	–	–
VPC-B3003A	3500	5990 (1346.5)	4754 (1068.7)	4153 (933.6)	3773 (848.3)	3503 (787.5)	3296 (741.0)	3131 (703.9)	–	–	–
VPC-B3004A	3500	6184 (1390.2)	4908 (1103.4)	4288 (963.9)	3896 (875.8)	3616 (813.0)	3403 (765.1)	3233 (726.8)	–	–	–
VPC-B3004B	2800	6184 (1390.2)	4908 (1103.4)	4288 (963.9)	3896 (875.8)	3616 (813.0)	–	–	–	–	–
VPC-B3004D	4000	6184 (1390.2)	4908 (1103.4)	4288 (963.9)	3896 (875.8)	3616 (813.0)	3403 (765.1)	3233 (726.8)	3092 (695.1)	–	–

(1) 1.0 N = 0.225 lb

(2) For Kinetix VPC bus overvoltage speed with and without a cooling fan, see Kinetix Rotary Motion Specifications Technical Data, publication KNX-TD001.

Axial Load Force Ratings (maximum radial load) for Brake Motors

Motor Cat. No. [1]	Maximum [2] Speed rpm	RPM									
		500 N (lb)	**1000** N (lb)	**1500** N (lb)	**2000** N (lb)	**2500** N (lb)	**3000** N (lb)	**3500** N (lb)	**4000** N (lb)	**4500** N (lb)	**5000** N (lb)
VPC-B1652A	4500	927 (208.4)	686 (154.2)	575 (129.3)	508 (114.1)	461 (103.6)	426 (95.7)	398 (89.5)	376 (84.4)	357 (80.2)	–
VPC-B1653A	4500	927 (208.4)	686 (154.2)	575 (129.3)	508 (114.1)	461 (103.6)	426 (95.7)	398 (89.5)	376 (84.4)	357 (80.2)	–
VPC-B1652D	5000	927 (208.4)	686 (154.2)	575 (129.3)	508 (114.1)	461 (103.6)	426 (95.7)	398 (89.5)	376 (84.4)	357 (80.2)	341 (76.6)
VPC-B1653D	5000	927 (208.4)	686 (154.2)	575 (129.3)	508 (114.1)	461 (103.6)	426 (95.7)	398 (89.5)	376 (84.4)	357 (80.2)	341 (76.6)
VPC-B1654D	5000	927 (208.4)	686 (154.2)	575 (129.3)	508 (114.1)	461 (103.6)	426 (95.7)	398 (89.5)	376 (84.4)	357 (80.2)	341 (76.6)
VPC-B21539	3000	1196 (269.0)	885 (199.0)	742 (166.9)	655 (147.3)	594 (133.6)	549 (123.5)	–	–	–	–
VPC-B21549	3000	1196 (269.0)	885 (199.0)	742 (166.9)	655 (147.3)	594 (133.6)	549 (123.5)	–	–	–	–
VPC-B2153A	4500	1196 (269.0)	885 (199.0)	742 (166.9)	655 (147.3)	594 (133.6)	549 (123.5)	514 (115.5)	485 (109.0)	460 (103.5)	–
VPC-B2154A	4500	1196 (269.0)	885 (199.0)	742 (166.9)	655 (147.3)	594 (133.6)	549 (123.5)	514 (115.5)	485 (109.0)	460 (103.5)	–
VPC-B2154B	3200	1196 (269.0)	885 (199.0)	742 (166.9)	655 (147.3)	594 (133.6)	549 (123.5)	–	–	–	–
VPC-B2154D	5000	1196 (269.0)	885 (199.0)	742 (166.9)	655 (147.3)	594 (133.6)	549 (123.5)	514 (115.5)	485 (109.0)	460 (103.5)	440 (98.9)
VPC-B2155B	3200	1196 (269.0)	885 (199.0)	742 (166.9)	655 (147.3)	594 (133.6)	549 (123.5)	–	–	–	–
VPC-B2155D	5000	1196 (269.0)	885 (199.0)	742 (166.9)	655 (147.3)	594 (133.6)	549 (123.5)	514 (115.5)	485 (109.0)	460 (103.5)	440 (98.9)
VPC-B2156A	2800	1196 (269.0)	885 (199.0)	742 (166.9)	655 (147.3)	594 (133.6)	–	–	–	–	–
VPC-B2156D	5000	1196 (269.0)	885 (199.0)	742 (166.9)	655 (147.3)	594 (133.6)	549 (123.5)	514 (115.5)	485 (109.0)	460 (103.5)	440 (98.9)
VPC-B30029	3000	1820 (409.2)	1347 (302.8)	1129 (253.9)	997 (224.1)	905 (203.3)	836 (187.9)	–	–	–	–
VPC-B30039	3000	1820 (409.2)	1347 (302.8)	1129 (253.9)	997 (224.1)	905 (203.3)	836 (187.9)	–	–	–	–
VPC-B30049	3000	1820 (409.2)	1347 (302.8)	1129 (253.9)	997 (224.1)	905 (203.3)	836 (187.9)	–	–	–	–
VPC-B3002A	4000	1820 (409.2)	1347 (302.8)	1129 (253.9)	997 (224.1)	905 (203.3)	836 (187.9)	782 (175.7)	737 (165.8)	–	–
VPC-B3003A	3500	1820 (409.2)	1347 (302.8)	1129 (253.9)	997 (224.1)	905 (203.3)	836 (187.9)	782 (175.7)	–	–	–
VPC-B3004A	3500	1820 (409.2)	1347 (302.8)	1129 (253.9)	997 (224.1)	905 (203.3)	836 (187.9)	782 (175.7)	–	–	–
VPC-B3004B	2800	1820 (409.2)	1347 (302.8)	1129 (253.9)	997 (224.1)	905 (203.3)	–	–	–	–	–
VPC-B3004D	4000	1820 (409.2)	1347 (302.8)	1129 (253.9)	997 (224.1)	905 (203.3)	836 (187.9)	782 (175.7)	737 (165.8)	–	–

(1) 1.0 N = 0.225 lb

(2) For Kinetix VPC bus overvoltage speed with and without a cooling fan, see Kinetix Rotary Motion Specifications Technical Data, publication KNX-TD001.

Axial Load Force Ratings (zero radial load) for Brake Motors

Motor Cat. No. (1)	Maximum (2) Speed rpm	RPM									
		500 N (lb)	1000 N (lb)	1500 N (lb)	2000 N (lb)	2500 N (lb)	3000 N (lb)	3500 N (lb)	4000 N (lb)	4500 N (lb)	5000 N (lb)
VPC-B1652A	4500	2713 (610.0)	2008 (451.5)	1684 (378.6)	1486 (334.1)	1349 (303.3)	1246 (280.2)	1166 (262.1)	1100 (247.3)	1045 (235.0)	–
VPC-B1653A	4500	2713 (610.0)	2008 (451.5)	1684 (378.6)	1486 (334.1)	1349 (303.3)	1246 (280.2)	1166 (262.1)	1100 (247.3)	1045 (235.0)	–
VPC-B1652D	5000	2713 (610.0)	2008 (451.5)	1684 (378.6)	1486 (334.1)	1349 (303.3)	1246 (280.2)	1166 (262.1)	1100 (247.3)	1045 (235.0)	998 (224.5)
VPC-B1653D	5000	2713 (610.0)	2008 (451.5)	1684 (378.6)	1486 (334.1)	1349 (303.3)	1246 (280.2)	1166 (262.1)	1100 (247.3)	1045 (235.0)	998 (224.5)
VPC-B1654D	5000	2713 (610.0)	2008 (451.5)	1684 (378.6)	1486 (334.1)	1349 (303.3)	1246 (280.2)	1166 (262.1)	1100 (247.3)	1045 (235.0)	998 (224.5)
VPC-B21539	3000	3502 (787.3)	2592 (582.7)	2174 (488.6)	1918 (431.3)	1741 (391.4)	1609 (361.6)	–	–	–	–
VPC-B21549	3000	3502 (787.3)	2592 (582.7)	2174 (488.6)	1918 (431.3)	1741 (391.4)	1609 (361.6)	–	–	–	–
VPC-B2153A	4500	3502 (787.3)	2592 (582.7)	2174 (488.6)	1918 (431.3)	1741 (391.4)	1609 (361.6)	1505 (338.2)	1420 (319.2)	1349 (303.3)	–
VPC-B2154A	4500	3502 (787.3)	2592 (582.7)	2174 (488.6)	1918 (431.3)	1741 (391.4)	1609 (361.6)	1505 (338.2)	1420 (319.2)	1349 (303.3)	–
VPC-B2154B	3200	3502 (787.3)	2592 (582.7)	2174 (488.6)	1918 (431.3)	1741 (391.4)	1609 (361.6)	–	–	–	–
VPC-B2154D	5000	3502 (787.3)	2592 (582.7)	2174 (488.6)	1918 (431.3)	1741 (391.4)	1609 (361.6)	1505 (338.2)	1420 (319.2)	1349 (303.3)	1289 (289.7)
VPC-B2155B	3200	3502 (787.3)	2592 (582.7)	2174 (488.6)	1918 (431.3)	1741 (391.4)	1609 (361.6)	–	–	–	–
VPC-B2155D	5000	3502 (787.3)	2592 (582.7)	2174 (488.6)	1918 (431.3)	1741 (391.4)	1609 (361.6)	1505 (338.2)	1420 (319.2)	1349 (303.3)	1289 (289.7)
VPC-B2156A	2800	3502 (787.3)	2592 (582.7)	2174 (488.6)	1918 (431.3)	1741 (391.4)	–	–	–	–	–
VPC-B2156D	5000	3502 (787.3)	2592 (582.7)	2174 (488.6)	1918 (431.3)	1741 (391.4)	1609 (361.6)	1505 (338.2)	1420 (319.2)	1349 (303.3)	1289 (289.7)
VPC-B30029	3000	5329 (1198.0)	3944 (886.6)	3307 (743.5)	2919 (656.2)	2649 (595.6)	2448 (550.3)	–	–	–	–
VPC-B30039	3000	5329 (1198.0)	3944 (886.6)	3307 (743.5)	2919 (656.2)	2649 (595.6)	2448 (550.3)	–	–	–	–
VPC-B30049	3000	5329 (1198.0)	3944 (886.6)	3307 (743.5)	2919 (656.2)	2649 (595.6)	2448 (550.3)	–	–	–	–
VPC-B3002A	4000	5329 (1198.0)	3944 (886.6)	3307 (743.5)	2919 (656.2)	2649 (595.6)	2448 (550.3)	2289 (514.7)	2160 (485.7)	–	–
VPC-B3003A	3500	5329 (1198.0)	3944 (886.6)	3307 (743.5)	2919 (656.2)	2649 (595.6)	2448 (550.3)	2289 (514.7)	–	–	–
VPC-B3004A	3500	5329 (1198.0)	3944 (886.6)	3307 (743.5)	2919 (656.2)	2649 (595.6)	2448 (550.3)	2289 (514.7)	–	–	–
VPC-B3004B	2800	5329 (1198.0)	3944 (886.6)	3307 (743.5)	2919 (656.2)	2649 (595.6)	–	–	–	–	–
VPC-B3004D	4000	5329 (1198.0)	3944 (886.6)	3307 (743.5)	2919 (656.2)	2649 (595.6)	2448 (550.3)	2289 (514.7)	2160 (485.7)	–	–

(1) 1.0 N = 0.225 lb

(2) For Kinetix VPC bus overvoltage speed with and without a cooling fan, see Kinetix Rotary Motion Specifications Technical Data, publication KNX-TD001.

Kinetix VPC Servo Motors (40,000 hours bearing-fatigue life)

Radial Load Force Ratings (maximum) for Non-brake Motors

Motor Cat. No. (1)	Maximum (2) Speed rpm	RPM									
		500 N (lb)	1000 N (lb)	1500 N (lb)	2000 N (lb)	2500 N (lb)	3000 N (lb)	3500 N (lb)	4000 N (lb)	4500 N (lb)	5000 N (lb)
VPC–B1652A	4500	2158 (485.2)	1713 (385.1)	1496 (336.4)	1359 (305.6)	1262 (283.7)	1188 (267.0)	1128 (253.6)	1079 (242.6)	1037 (233.2)	–
VPC–B1653A	4500	2279 (512.3)	1809 (406.6)	1580 (355.2)	1436 (322.7)	1333 (299.6)	1254 (281.9)	1191 (267.8)	1139 (256.2)	1096 (246.3)	–
VPC–B1652D	5000	2158 (485.2)	1713 (385.1)	1496 (336.4)	1359 (305.6)	1262 (283.7)	1188 (267.0)	1128 (253.6)	1079 (242.6)	1037 (233.2)	1002 (225.2)
VPC–B1653D	5000	2279 (512.3)	1809 (406.6)	1580 (355.2)	1436 (322.7)	1333 (299.6)	1254 (281.9)	1191 (267.8)	1139 (256.2)	1096 (246.3)	1058 (237.8)
VPC–B1654D	5000	2343 (526.7)	1860 (418.1)	1625 (365.2)	1476 (331.8)	1370 (308.0)	1289 (289.9)	1225 (275.4)	1172 (263.4)	1126 (253.2)	1088 (244.5)
VPC–B21539	3000	2987 (671.5)	2371 (533.0)	2071 (465.6)	1882 (423.0)	1747 (392.7)	1644 (369.6)	–	–	–	–
VPC–B21549	3000	3066 (689.2)	2433 (547.0)	2126 (477.8)	1931 (434.1)	1793 (403.0)	1687 (379.3)	–	–	–	–
VPC–B2153A	4500	2987 (671.5)	2371 (533.0)	2071 (465.6)	1882 (423.0)	1747 (392.7)	1644 (369.6)	1562 (351.0)	1494 (335.8)	1436 (322.8)	–
VPC–B2154A	4500	3066 (689.2)	2433 (547.0)	2126 (477.8)	1931 (434.1)	1793 (403.0)	1687 (379.3)	1603 (360.3)	1533 (344.6)	1474 (331.3)	–
VPC–B2154B	3200	3066 (689.2)	2433 (547.0)	2126 (477.8)	1931 (434.1)	1793 (403.0)	1687 (379.3)	–	–	–	–
VPC–B2154D	5000	3066 (689.2)	2433 (547.0)	2126 (477.8)	1931 (434.1)	1793 (403.0)	1687 (379.3)	1603 (360.3)	1533 (344.6)	1474 (331.3)	1423 (319.9)
VPC–B2155B	3200	3128 (703.3)	2483 (558.2)	2169 (487.6)	1971 (443.0)	1829 (411.3)	1722 (387.0)	–	–	–	–
VPC–B2155D	5000	3128 (703.3)	2483 (558.2)	2169 (487.6)	1971 (443.0)	1829 (411.3)	1722 (387.0)	1635 (367.6)	1564 (351.6)	1504 (338.1)	1452 (326.4)
VPC–B2156A	2800	3180 (714.8)	2524 (567.3)	2205 (495.6)	2003 (450.3)	1859 (418.0)	–	–	–	–	–
VPC–B2156D	5000	3180 (714.8)	2524 (567.3)	2205 (495.6)	2003 (450.3)	1859 (418.0)	1750 (393.4)	1662 (373.7)	1590 (357.4)	1529 (343.6)	1476 (331.8)
VPC–B30029	3000	4526 (1017.5)	3592 (807.6)	3138 (705.5)	2851 (641.0)	2647 (595.0)	2491 (559.9)	–	–	–	–
VPC–B30039	3000	4526 (1017.5)	3592 (807.6)	3138 (705.5)	2851 (641.0)	2647 (595.0)	2491 (559.9)	–	–	–	–
VPC–B30049	3000	4652 (1045.9)	3692 (830.1)	3226 (725.2)	2931 (658.8)	2721 (611.6)	2560 (575.6)	–	–	–	–
VPC–B3002A	4000	4526 (1017.5)	3592 (807.6)	3138 (705.5)	2851 (641.0)	2647 (595.0)	2491 (559.9)	2366 (531.9)	2263 (508.7)	–	–
VPC–B3003A	3500	4526 (1017.5)	3592 (807.6)	3138 (705.5)	2851 (641.0)	2647 (595.0)	2491 (559.9)	2366 (531.9)	–	–	–
VPC–B3004A	3500	4652 (1045.9)	3692 (830.1)	3226 (725.2)	2931 (658.8)	2721 (611.6)	2560 (575.6)	2432 (546.7)	–	–	–
VPC–B3004B	2800	4652 (1045.9)	3692 (830.1)	3226 (725.2)	2931 (658.8)	2721 (611.6)	–	–	–	–	–
VPC–B3004D	4000	4652 (1045.9)	3692 (830.1)	3226 (725.2)	2931 (658.8)	2721 (611.6)	2560 (575.6)	2432 (546.7)	2326 (522.9)	–	–

(1) 1.0 N = 0.225 lb

(2) For Kinetix VPC bus overvoltage speed with and without a cooling fan, see Kinetix Rotary Motion Specifications Technical Data, publication KNX-TD001.

Axial Load Force Ratings (maximum radial load) for Non-brake Motors

Motor Cat. No. (1)	Maximum (2) Speed rpm	RPM									
		500 N (lb)	1000 N (lb)	1500 N (lb)	2000 N (lb)	2500 N (lb)	3000 N (lb)	3500 N (lb)	4000 N (lb)	4500 N (lb)	5000 N (lb)
VPC-B1652A	4500	686 (154.2)	508 (114.1)	426 (95.7)	376 (84.4)	341 (76.6)	315 (70.8)	294 (66.2)	278 (62.5)	264 (59.4)	–
VPC-B1653A	4500	686 (154.2)	508 (114.1)	426 (95.7)	376 (84.4)	341 (76.6)	315 (70.8)	294 (66.2)	278 (62.5)	264 (59.4)	–
VPC-B1652D	5000	686 (154.2)	508 (114.1)	426 (95.7)	376 (84.4)	341 (76.6)	315 (70.8)	294 (66.2)	278 (62.5)	264 (59.4)	252 (56.7)
VPC-B1653D	5000	686 (154.2)	508 (114.1)	426 (95.7)	376 (84.4)	341 (76.6)	315 (70.8)	294 (66.2)	278 (62.5)	264 (59.4)	252 (56.7)
VPC-B1654D	5000	686 (154.2)	508 (114.1)	426 (95.7)	376 (84.4)	341 (76.6)	315 (70.8)	294 (66.2)	278 (62.5)	264 (59.4)	252 (56.7)
VPC-B21539	3000	885 (199.0)	655 (147.3)	549 (123.5)	485 (109.0)	440 (98.9)	406 (91.4)	–	–	–	–
VPC-B21549	3000	885 (199.0)	655 (147.3)	549 (123.5)	485 (109.0)	440 (98.9)	406 (91.4)	–	–	–	–
VPC-B2153A	4500	885 (199.0)	655 (147.3)	549 (123.5)	485 (109.0)	440 (98.9)	406 (91.4)	380 (85.4)	359 (80.6)	341 (76.6)	–
VPC-B2154A	4500	885 (199.0)	655 (147.3)	549 (123.5)	485 (109.0)	440 (98.9)	406 (91.4)	380 (85.4)	359 (80.6)	341 (76.6)	–
VPC-B2154B	3200	885 (199.0)	655 (147.3)	549 (123.5)	485 (109.0)	440 (98.9)	406 (91.4)	–	–	–	–
VPC-B2154D	5000	885 (199.0)	655 (147.3)	549 (123.5)	485 (109.0)	440 (98.9)	406 (91.4)	380 (85.4)	359 (80.6)	341 (76.6)	325 (73.2)
VPC-B2155B	3200	885 (199.0)	655 (147.3)	549 (123.5)	485 (109.0)	440 (98.9)	406 (91.4)	–	–	–	–
VPC-B2155D	5000	885 (199.0)	655 (147.3)	549 (123.5)	485 (109.0)	440 (98.9)	406 (91.4)	380 (85.4)	359 (80.6)	341 (76.6)	325 (73.2)
VPC-B2156A	2800	885 (199.0)	655 (147.3)	549 (123.5)	485 (109.0)	440 (98.9)	–	–	–	–	–
VPC-B2156D	5000	885 (199.0)	655 (147.3)	549 (123.5)	485 (109.0)	440 (98.9)	406 (91.4)	380 (85.4)	359 (80.6)	341 (76.6)	325 (73.2)
VPC-B30029	3000	1347 (302.8)	997 (224.1)	836 (187.9)	737 (165.8)	669 (150.5)	618 (139.0)	–	–	–	–
VPC-B30039	3000	1347 (302.8)	997 (224.1)	836 (187.9)	737 (165.8)	669 (150.5)	618 (139.0)	–	–	–	–
VPC-B30049	3000	1347 (302.8)	997 (224.1)	836 (187.9)	737 (165.8)	669 (150.5)	618 (139.0)	–	–	–	–
VPC-B3002A	4000	1347 (302.8)	997 (224.1)	836 (187.9)	737 (165.8)	669 (150.5)	618 (139.0)	578 (130.0)	546 (122.7)	–	–
VPC-B3003A	3500	1347 (302.8)	997 (224.1)	836 (187.9)	737 (165.8)	669 (150.5)	618 (139.0)	578 (130.0)	–	–	–
VPC-B3004A	3500	1347 (302.8)	997 (224.1)	836 (187.9)	737 (165.8)	669 (150.5)	618 (139.0)	578 (130.0)	–	–	–
VPC-B3004B	2800	1347 (302.8)	997 (224.1)	836 (187.9)	737 (165.8)	669 (150.5)	–	–	–	–	–
VPC-B3004D	4000	1347 (302.8)	997 (224.1)	836 (187.9)	737 (165.8)	669 (150.5)	618 (139.0)	578 (130.0)	546 (122.7)	–	–

(1) 1.0 N = 0.225 lb

(2) For Kinetix VPC bus overvoltage speed with and without a cooling fan, see Kinetix Rotary Motion Specifications Technical Data, publication KNX-TD001.

Axial Load Force Ratings (zero radial load) for Non-brake Motors

Motor Cat. No. (1)	Maximum (2) Speed rpm	RPM									
		500 N (lb)	1000 N (lb)	1500 N (lb)	2000 N (lb)	2500 N (lb)	3000 N (lb)	3500 N (lb)	4000 N (lb)	4500 N (lb)	5000 N (lb)
VPC-B1652A	4500	2008 (451.5)	1486 (334.1)	1246 (280.2)	1100 (247.3)	998 (224.5)	922 (207.4)	863 (194.0)	814 (183.0)	774 (173.9)	–
VPC-B1653A	4500	2008 (451.5)	1486 (334.1)	1246 (280.2)	1100 (247.3)	998 (224.5)	922 (207.4)	863 (194.0)	814 (183.0)	774 (173.9)	–
VPC-B1652D	5000	2008 (451.5)	1486 (334.1)	1246 (280.2)	1100 (247.3)	998 (224.5)	922 (207.4)	863 (194.0)	814 (183.0)	774 (173.9)	739 (166.1)
VPC-B1653D	5000	2008 (451.5)	1486 (334.1)	1246 (280.2)	1100 (247.3)	998 (224.5)	922 (207.4)	863 (194.0)	814 (183.0)	774 (173.9)	739 (166.1)
VPC-B1654D	5000	2008 (451.5)	1486 (334.1)	1246 (280.2)	1100 (247.3)	998 (224.5)	922 (207.4)	863 (194.0)	814 (183.0)	774 (173.9)	739 (166.1)
VPC-B21539	3000	2592 (582.7)	1918 (431.3)	1609 (361.6)	1420 (319.2)	1289 (289.7)	1191 (267.7)	–	–	–	–
VPC-B21549	3000	2592 (582.7)	1918 (431.3)	1609 (361.6)	1420 (319.2)	1289 (289.7)	1191 (267.7)	–	–	–	–
VPC-B2153A	4500	2592 (582.7)	1918 (431.3)	1609 (361.6)	1420 (319.2)	1289 (289.7)	1191 (267.7)	1114 (250.3)	1051 (236.2)	998 (224.4)	–
VPC-B2154A	4500	2592 (582.7)	1918 (431.3)	1609 (361.6)	1420 (319.2)	1289 (289.7)	1191 (267.7)	1114 (250.3)	1051 (236.2)	998 (224.4)	–
VPC-B2154B	3200	2592 (582.7)	1918 (431.3)	1609 (361.6)	1420 (319.2)	1289 (289.7)	1191 (267.7)	–	–	–	–
VPC-B2154D	5000	2592 (582.7)	1918 (431.3)	1609 (361.6)	1420 (319.2)	1289 (289.7)	1191 (267.7)	1114 (250.3)	1051 (236.2)	998 (224.4)	954 (214.4)
VPC-B2155B	3200	2592 (582.7)	1918 (431.3)	1609 (361.6)	1420 (319.2)	1289 (289.7)	1191 (267.7)	–	–	–	–
VPC-B2155D	5000	2592 (582.7)	1918 (431.3)	1609 (361.6)	1420 (319.2)	1289 (289.7)	1191 (267.7)	1114 (250.3)	1051 (236.2)	998 (224.4)	954 (214.4)
VPC-B2156A	2800	2592 (582.7)	1918 (431.3)	1609 (361.6)	1420 (319.2)	1289 (289.7)	–	–	–	–	–
VPC-B2156D	5000	2592 (582.7)	1918 (431.3)	1609 (361.6)	1420 (319.2)	1289 (289.7)	1191 (267.7)	1114 (250.3)	1051 (236.2)	998 (224.4)	954 (214.4)
VPC-B30029	3000	3944 (886.6)	2919 (656.2)	2448 (550.3)	2160 (485.7)	1961 (440.8)	1812 (407.3)	–	–	–	–
VPC-B30039	3000	3944 (886.6)	2919 (656.2)	2448 (550.3)	2160 (485.7)	1961 (440.8)	1812 (407.3)	–	–	–	–
VPC-B30049	3000	3944 (886.6)	2919 (656.2)	2448 (550.3)	2160 (485.7)	1961 (440.8)	1812 (407.3)	–	–	–	–
VPC-B3002A	4000	3944 (886.6)	2919 (656.2)	2448 (550.3)	2160 (485.7)	1961 (440.8)	1812 (407.3)	1694 (380.9)	1599 (359.4)	–	–
VPC-B3003A	3500	3944 (886.6)	2919 (656.2)	2448 (550.3)	2160 (485.7)	1961 (440.8)	1812 (407.3)	1694 (380.9)	–	–	–
VPC-B3004A	3500	3944 (886.6)	2919 (656.2)	2448 (550.3)	2160 (485.7)	1961 (440.8)	1812 (407.3)	1694 (380.9)	–	–	–
VPC-B3004B	2800	3944 (886.6)	2919 (656.2)	2448 (550.3)	2160 (485.7)	1961 (440.8)	–	–	–	–	–
VPC-B3004D	4000	3944 (886.6)	2919 (656.2)	2448 (550.3)	2160 (485.7)	1961 (440.8)	1812 (407.3)	1694 (380.9)	1599 (359.4)	–	–

(1) 1.0 N = 0.225 lb

(2) For Kinetix VPC bus overvoltage speed with and without a cooling fan, see Kinetix Rotary Motion Specifications Technical Data, publication KNX-TD001.

Radial Load Force Ratings (maximum) for Brake Motors

Motor Cat. No. [1]	Maximum [2] Speed rpm	RPM									
		500 N (lb)	1000 N (lb)	1500 N (lb)	2000 N (lb)	2500 N (lb)	3000 N (lb)	3500 N (lb)	4000 N (lb)	4500 N (lb)	5000 N (lb)
VPC-B1652A	4500	2279 (512.3)	1809 (406.6)	1580 (355.2)	1436 (322.7)	1333 (299.6)	1254 (281.9)	1191 (267.8)	1139 (256.2)	1096 (246.3)	–
VPC-B1653A	4500	2343 (526.7)	1860 (418.1)	1625 (365.2)	1476 (331.8)	1370 (308.0)	1289 (289.9)	1225 (275.4)	1172 (263.4)	1126 (253.2)	–
VPC-B1652D	5000	2279 (512.3)	1809 (406.6)	1580 (355.2)	1436 (322.7)	1333 (299.6)	1254 (281.9)	1191 (267.8)	1139 (256.2)	1096 (246.3)	1058 (237.8)
VPC-B1653D	5000	2343 (526.7)	1860 (418.1)	1625 (365.2)	1476 (331.8)	1370 (308.0)	1289 (289.9)	1225 (275.4)	1172 (263.4)	1126 (253.2)	1088 (244.5)
VPC-B1654D	5000	2394 (538.2)	1900 (427.2)	1660 (373.2)	1508 (339.0)	1400 (314.7)	1317 (296.2)	1251 (281.3)	1197 (269.1)	1151 (258.7)	1111 (249.8)
VPC-B21539	3000	3128 (703.3)	2483 (558.2)	2169 (487.6)	1971 (443.0)	1829 (411.3)	1722 (387.0)	–	–	–	–
VPC-B21549	3000	3180 (714.8)	2524 (567.3)	2205 (495.6)	2003 (450.3)	1859 (418.0)	1750 (393.4)	–	–	–	–
VPC-B2153A	4500	3128 (703.3)	2483 (558.2)	2169 (487.6)	1971 (443.0)	1829 (411.3)	1722 (387.0)	1635 (367.6)	1564 (351.6)	1504 (338.1)	–
VPC-B2154A	4500	3180 (714.8)	2524 (567.3)	2205 (495.6)	2003 (450.3)	1859 (418.0)	1750 (393.4)	1662 (373.7)	1590 (357.4)	1529 (343.6)	–
VPC-B2154B	3200	3180 (714.8)	2524 (567.3)	2205 (495.6)	2003 (450.3)	1859 (418.0)	1750 (393.4)	–	–	–	–
VPC-B2154D	5000	3180 (714.8)	2524 (567.3)	2205 (495.6)	2003 (450.3)	1859 (418.0)	1750 (393.4)	1662 (373.7)	1590 (357.4)	1529 (343.6)	1476 (331.8)
VPC-B2155B	3200	3259 (732.5)	2586 (581.4)	2259 (507.9)	2053 (461.5)	1906 (428.4)	1793 (403.1)	–	–	–	–
VPC-B2155D	5000	3259 (732.5)	2586 (581.4)	2259 (507.9)	2053 (461.5)	1906 (428.4)	1793 (403.1)	1703 (382.9)	1629 (366.3)	1567 (352.2)	1512 (340.0)
VPC-B2156A	2800	3259 (732.5)	2586 (581.4)	2259 (507.9)	2053 (461.5)	1906 (428.4)	–	–	–	–	–
VPC-B2156D	5000	3259 (732.5)	2586 (581.4)	2259 (507.9)	2053 (461.5)	1906 (428.4)	1793 (403.1)	1703 (382.9)	1629 (366.3)	1567 (352.2)	1512 (340.0)
VPC-B30029	3000	4652 (1045.9)	3692 (830.1)	3226 (725.2)	2931 (658.8)	2721 (611.6)	2560 (575.6)	–	–	–	–
VPC-B30039	3000	4754 (1068.7)	3773 (848.3)	3296 (741.0)	2995 (673.3)	2780 (625.0)	2616 (588.2)	–	–	–	–
VPC-B30049	3000	4908 (1103.4)	3896 (875.8)	3403 (765.1)	3092 (695.1)	2870 (645.3)	2701 (607.2)	–	–	–	–
VPC-B3002A	4000	4652 (1045.9)	3692 (830.1)	3226 (725.2)	2931 (658.8)	2721 (611.6)	2560 (575.6)	2432 (546.7)	2326 (522.9)	–	–
VPC-B3003A	3500	4754 (1068.7)	3773 (848.3)	3296 (741.0)	2995 (673.3)	2780 (625.0)	2616 (588.2)	2485 (558.7)	–	–	–
VPC-B3004A	3500	4908 (1103.4)	3896 (875.8)	3403 (765.1)	3092 (695.1)	2870 (645.3)	2701 (607.2)	2566 (576.8)	–	–	–
VPC-B3004B	2800	4908 (1103.4)	3896 (875.8)	3403 (765.1)	3092 (695.1)	2870 (645.3)	–	–	–	–	–
VPC-B3004D	4000	4908 (1103.4)	3896 (875.8)	3403 (765.1)	3092 (695.1)	2870 (645.3)	2701 (607.2)	2566 (576.8)	2454 (551.7)	–	–

(1) 1.0 N = 0.225 lb

(2) For Kinetix VPC bus overvoltage speed with and without a cooling fan, see Kinetix Rotary Motion Specifications Technical Data, publication KNX-TD001.

Axial Load Force Ratings (maximum radial load) for Brake Motors

Motor Cat. No. (1)	Maximum (2) Speed rpm	RPM									
		500 N (lb)	1000 N (lb)	1500 N (lb)	2000 N (lb)	2500 N (lb)	3000 N (lb)	3500 N (lb)	4000 N (lb)	4500 N (lb)	5000 N (lb)
VPC-B1652A	4500	686 (154.2)	508 (114.1)	426 (95.7)	376 (84.4)	341 (76.6)	315 (70.8)	294 (66.2)	278 (62.5)	264 (59.4)	–
VPC-B1653A	4500	686 (154.2)	508 (114.1)	426 (95.7)	376 (84.4)	341 (76.6)	315 (70.8)	294 (66.2)	278 (62.5)	264 (59.4)	–
VPC-B1652D	5000	686 (154.2)	508 (114.1)	426 (95.7)	376 (84.4)	341 (76.6)	315 (70.8)	294 (66.2)	278 (62.5)	264 (59.4)	252 (56.7)
VPC-B1653D	5000	686 (154.2)	508 (114.1)	426 (95.7)	376 (84.4)	341 (76.6)	315 (70.8)	294 (66.2)	278 (62.5)	264 (59.4)	252 (56.7)
VPC-B1654D	5000	686 (154.2)	508 (114.1)	426 (95.7)	376 (84.4)	341 (76.6)	315 (70.8)	294 (66.2)	278 (62.5)	264 (59.4)	252 (56.7)
VPC-B21539	3000	885 (199.0)	655 (147.3)	549 (123.5)	485 (109.0)	440 (98.9)	406 (91.4)	–	–	–	–
VPC-B21549	3000	885 (199.0)	655 (147.3)	549 (123.5)	485 (109.0)	440 (98.9)	406 (91.4)	–	–	–	–
VPC-B2153A	4500	885 (199.0)	655 (147.3)	549 (123.5)	485 (109.0)	440 (98.9)	406 (91.4)	380 (85.4)	359 (80.6)	341 (76.6)	–
VPC-B2154A	4500	885 (199.0)	655 (147.3)	549 (123.5)	485 (109.0)	440 (98.9)	406 (91.4)	380 (85.4)	359 (80.6)	341 (76.6)	–
VPC-B2154B	3200	885 (199.0)	655 (147.3)	549 (123.5)	485 (109.0)	440 (98.9)	406 (91.4)	–	–	–	–
VPC-B2154D	5000	885 (199.0)	655 (147.3)	549 (123.5)	485 (109.0)	440 (98.9)	406 (91.4)	380 (85.4)	359 (80.6)	341 (76.6)	325 (73.2)
VPC-B2155B	3200	885 (199.0)	655 (147.3)	549 (123.5)	485 (109.0)	440 (98.9)	406 (91.4)	–	–	–	–
VPC-B2155D	5000	885 (199.0)	655 (147.3)	549 (123.5)	485 (109.0)	440 (98.9)	406 (91.4)	380 (85.4)	359 (80.6)	341 (76.6)	325 (73.2)
VPC-B2156A	2800	885 (199.0)	655 (147.3)	549 (123.5)	485 (109.0)	440 (98.9)	–	–	–	–	–
VPC-B2156D	5000	885 (199.0)	655 (147.3)	549 (123.5)	485 (109.0)	440 (98.9)	406 (91.4)	380 (85.4)	359 (80.6)	341 (76.6)	325 (73.2)
VPC-B30029	3000	1347 (302.8)	997 (224.1)	836 (187.9)	737 (165.8)	669 (150.5)	618 (139.0)	–	–	–	–
VPC-B30039	3000	1347 (302.8)	997 (224.1)	836 (187.9)	737 (165.8)	669 (150.5)	618 (139.0)	–	–	–	–
VPC-B30049	3000	1347 (302.8)	997 (224.1)	836 (187.9)	737 (165.8)	669 (150.5)	618 (139.0)	–	–	–	–
VPC-B3002A	4000	1347 (302.8)	997 (224.1)	836 (187.9)	737 (165.8)	669 (150.5)	618 (139.0)	578 (130.0)	546 (122.7)	–	–
VPC-B3003A	3500	1347 (302.8)	997 (224.1)	836 (187.9)	737 (165.8)	669 (150.5)	618 (139.0)	578 (130.0)	–	–	–
VPC-B3004A	3500	1347 (302.8)	997 (224.1)	836 (187.9)	737 (165.8)	669 (150.5)	618 (139.0)	578 (130.0)	–	–	–
VPC-B3004B	2800	1347 (302.8)	997 (224.1)	836 (187.9)	737 (165.8)	669 (150.5)	–	–	–	–	–
VPC-B3004D	4000	1347 (302.8)	997 (224.1)	836 (187.9)	737 (165.8)	669 (150.5)	618 (139.0)	578 (130.0)	546 (122.7)	–	–

(1) 1.0 N = 0.225 lb

(2) For Kinetix VPC bus overvoltage speed with and without a cooling fan, see Kinetix Rotary Motion Specifications Technical Data, publication KNX-TD001.

Axial Load Force Ratings (zero radial load) for Brake Motors

Motor Cat. No.[1]	Maximum[2] Speed rpm	RPM									
		500 N (lb)	**1000** N (lb)	**1500** N (lb)	**2000** N (lb)	**2500** N (lb)	**3000** N (lb)	**3500** N (lb)	**4000** N (lb)	**4500** N (lb)	**5000** N (lb)
VPC-B1652A	4500	2008 (451.5)	1486 (334.1)	1246 (280.2)	1100 (247.3)	998 (224.5)	922 (207.4)	863 (194.0)	814 (183.0)	774 (173.9)	–
VPC-B1653A	4500	2008 (451.5)	1486 (334.1)	1246 (280.2)	1100 (247.3)	998 (224.5)	922 (207.4)	863 (194.0)	814 (183.0)	774 (173.9)	–
VPC-B1652D	5000	2008 (451.5)	1486 (334.1)	1246 (280.2)	1100 (247.3)	998 (224.5)	922 (207.4)	863 (194.0)	814 (183.0)	774 (173.9)	739 (166.1)
VPC-B1653D	5000	2008 (451.5)	1486 (334.1)	1246 (280.2)	1100 (247.3)	998 (224.5)	922 (207.4)	863 (194.0)	814 (183.0)	774 (173.9)	739 (166.1)
VPC-B1654D	5000	2008 (451.5)	1486 (334.1)	1246 (280.2)	1100 (247.3)	998 (224.5)	922 (207.4)	863 (194.0)	814 (183.0)	774 (173.9)	739 (166.1)
VPC-B21539	3000	2592 (582.7)	1918 (431.3)	1609 (361.6)	1420 (319.2)	1289 (289.7)	1191 (267.7)	–	–	–	–
VPC-B21549	3000	2592 (582.7)	1918 (431.3)	1609 (361.6)	1420 (319.2)	1289 (289.7)	1191 (267.7)	–	–	–	–
VPC-B2153A	4500	2592 (582.7)	1918 (431.3)	1609 (361.6)	1420 (319.2)	1289 (289.7)	1191 (267.7)	1114 (250.3)	1051 (236.2)	998 (224.4)	–
VPC-B2154A	4500	2592 (582.7)	1918 (431.3)	1609 (361.6)	1420 (319.2)	1289 (289.7)	1191 (267.7)	1114 (250.3)	1051 (236.2)	998 (224.4)	–
VPC-B2154B	3200	2592 (582.7)	1918 (431.3)	1609 (361.6)	1420 (319.2)	1289 (289.7)	1191 (267.7)	–	–	–	–
VPC-B2154D	5000	2592 (582.7)	1918 (431.3)	1609 (361.6)	1420 (319.2)	1289 (289.7)	1191 (267.7)	1114 (250.3)	1051 (236.2)	998 (224.4)	954 (214.4)
VPC-B2155B	3200	2592 (582.7)	1918 (431.3)	1609 (361.6)	1420 (319.2)	1289 (289.7)	1191 (267.7)	–	–	–	–
VPC-B2155D	5000	2592 (582.7)	1918 (431.3)	1609 (361.6)	1420 (319.2)	1289 (289.7)	1191 (267.7)	1114 (250.3)	1051 (236.2)	998 (224.4)	954 (214.4)
VPC-B2156A	2800	2592 (582.7)	1918 (431.3)	1609 (361.6)	1420 (319.2)	1289 (289.7)	–	–	–	–	–
VPC-B2156D	5000	2592 (582.7)	1918 (431.3)	1609 (361.6)	1420 (319.2)	1289 (289.7)	1191 (267.7)	1114 (250.3)	1051 (236.2)	998 (224.4)	954 (214.4)
VPC-B30029	3000	3944 (886.6)	2919 (656.2)	2448 (550.3)	2160 (485.7)	1961 (440.8)	1812 (407.3)	–	–	–	–
VPC-B30039	3000	3944 (886.6)	2919 (656.2)	2448 (550.3)	2160 (485.7)	1961 (440.8)	1812 (407.3)	–	–	–	–
VPC-B30049	3000	3944 (886.6)	2919 (656.2)	2448 (550.3)	2160 (485.7)	1961 (440.8)	1812 (407.3)	–	–	–	–
VPC-B3002A	4000	3944 (886.6)	2919 (656.2)	2448 (550.3)	2160 (485.7)	1961 (440.8)	1812 (407.3)	1694 (380.9)	1599 (359.4)	–	–
VPC-B3003A	3500	3944 (886.6)	2919 (656.2)	2448 (550.3)	2160 (485.7)	1961 (440.8)	1812 (407.3)	1694 (380.9)	–	–	–
VPC-B3004A	3500	3944 (886.6)	2919 (656.2)	2448 (550.3)	2160 (485.7)	1961 (440.8)	1812 (407.3)	1694 (380.9)	–	–	–
VPC-B3004B	2800	3944 (886.6)	2919 (656.2)	2448 (550.3)	2160 (485.7)	1961 (440.8)	–	–	–	–	–
VPC-B3004D	4000	3944 (886.6)	2919 (656.2)	2448 (550.3)	2160 (485.7)	1961 (440.8)	1812 (407.3)	1694 (380.9)	1599 (359.4)	–	–

(1) 1.0 N = 0.225 lb

(2) For Kinetix VPC bus overvoltage speed with and without a cooling fan, see Kinetix Rotary Motion Specifications Technical Data, publication KNX-TD001.

Environmental Ratings

Attribute	Value
Temperature, operating	-20…+40 °C (-4…+104 °F) (3)
Temperature, storage	-30…+40 °C (-22…+104 °F)
Relative humidity, storage	5…90% noncondensing
Atmosphere, storage	Noncorrosive
IP rating (1) of motor with shaft seal (2) and use of environmentally sealed cable connectors	IP65 – protected against dust and low-pressure jet spray from all directions

(1) IP rating refers to the International Protection Code.

(2) The inclusive Kinetix VPC shaft seal is required to provide the specified IP rating for the motor. A system level rating is also dependent on the IP rating of the cable. See Additional Resources on page 29 for information on shaft-seal replacement installation instructions.

(3) To obtain this thermal rating, mount the motor on a surface with heat dissipation equivalent to the size of an aluminum heatsink as listed here:
Frames 165 mm and 215 mm, 304.8 x 304.8 x 12.7 mm (12 x 12 x 0.5 in.)
Frame 300 mm, 533.4 x 533.4 x 25.4 mm (21 x 21 x 1 in.)

2090-Series Motor Cables

2090-Series single motor cables are required with VPC-B*xxxxx*-Q servo motors. The -Q in the catalog number specifies motors that are equipped with a Hiperface DSL feedback sensor. Single motor cables are designed to isolate the power, and feedback or brake signals effectively within the cable. Single motor cables are available in configurable standard-cable lengths, and provide environmental and shield termination.

2090-Series motor power and feedback cables are required with VPC-B*xxxxx*-S, -M, and -Y servo motors. These designators indicate single-turn and multi-turn (Hiperface) encoders, and multi-turn EnDat encoder respectively.

Contact your nearest Rockwell Automation sales office or refer to the Kinetix Motion Accessories Technical Data, publication KNX-TD004, for 2090-Series motor cable specifications.

Shaft Seal Kits

Replacement shaft seal kits for field installation are available. Shaft seals are made of nitrile and kits include a lubricant to reduce wear.

IMPORTANT Shaft seals are subject to wear and require periodic inspection and replacement. Replacement is recommended every 3 months, not to exceed 12 months, depending on use.

Shaft Seal Kit Catalog Numbers

Motor Cat. No.	Shaft Seal Kit Cat. No.
VPC-B165*xx*	MPL-SSN-A6B6
VPC-B215*xx*	VPL-SS-X256
VPC-B300*xx*	VPC-SSN-F300

Additional Resources

These documents contain information concerning related products from Rockwell Automation.

Resource	Description
Kinetix Rotary Motion Specifications Technical Data, publication KNX-TD001	Provides product specifications for Allen-Bradley® rotary motors, with performance, environmental, certifications, load force, and dimension drawings.
Kinetix Motion Accessories Specifications, publication KNX-TD004	Provides product specifications and dimensions for Allen-Bradley servo drive accessories.
Kinetix 5700 Servo Drives User Manual, publication 2198-UM002	Provides information on how to install, configure, start up, and troubleshoot Kinetix 5700 servo drive systems.
Kinetix 5700 Drive System Design Guide, publication KNX-RM010	Provides information on drive system components and accessory items you need for your Kinetix 5700 drive/motor combination.
Shaft-seal Kit Installation Instructions, publication 2090-IN012	Provides information on the installation of a shaft seal on this and other Allen-Bradley servo motors.
Kinetix VPC Continuous-duty Motor Fan Kits Installation Instructions, publication VPC-IN002	Provides information on the installation of replacement cooling fan kits for Kinetix VPC servo motors.
Product Certifications website, http://www.rockwellautomation.com/global/certification/overview.page	Provides declarations of conformity, certificates, and other certification details.
Allen-Bradley Industrial Automation Glossary, publication AG-7.1	A glossary of industrial automation terms and abbreviations.
System Design for Control of Electrical Noise Reference Manual, publication GMC-RM001	Provides information, examples, and techniques that are designed to minimize system failures that are caused by electrical noise.

You can view or download publications at http://www.rockwellautomation.com/global/literature-library/overview.page.

Rockwell Automation Support

Use the following resources to access support information.

Technical Support Center	Knowledgebase Articles, How-to Videos, FAQs, Chat, User Forums, and Product Notification Updates.	https://rockwellautomation.custhelp.com/
Local Technical Support Phone Numbers	Locate the phone number for your country.	http://www.rockwellautomation.com/global/support/get-support-now.page
Direct Dial Codes	Find the Direct Dial Code for your product. Use the code to route your call directly to a technical support engineer.	http://www.rockwellautomation.com/global/support/direct-dial.page
Literature Library	Installation Instructions, Manuals, Brochures, and Technical Data.	http://www.rockwellautomation.com/global/literature-library/overview.page
Product Compatibility and Download Center (PCDC)	Get help determining how products interact, check features and capabilities, and find associated firmware.	http://www.rockwellautomation.com/global/support/pcdc.page

Documentation Feedback

Your comments will help us serve your documentation needs better. If you have any suggestions on how to improve this document, complete the How Are We Doing? form at http://literature.rockwellautomation.com/idc/groups/literature/documents/du/ra-du002_-en-e.pdf.

At the end of its life, this equipment should be collected separately from any unsorted municipal waste.

Rockwell Automation maintains current product environmental information on its website at http://www.rockwellautomation.com/rockwellautomation/about-us/sustainability-ethics/product-environmental-compliance.page.

Allen-Bradley, Kinetix, Rockwell Automation, and Rockwell Software are trademarks of Rockwell Automation, Inc.
Trademarks not belonging to Rockwell Automation are property of their respective companies.

Rockwell Otomasyon Ticaret A.Ş., Kar Plaza İş Merkezi E Blok Kat:6 34752 İçerenköy, İstanbul, Tel: +90 (216) 5698400

www.rockwellautomation.com

Power, Control and Information Solutions Headquarters

Americas: Rockwell Automation, 1201 South Second Street, Milwaukee, WI 53204-2496 USA, Tel: (1) 414.382.2000, Fax: (1) 414.382.4444
Europe/Middle East/Africa: Rockwell Automation NV, Pegasus Park, De Kleetlaan 12a, 1831 Diegem, Belgium, Tel: (32) 2 663 0600, Fax: (32) 2 663 0640
Asia Pacific: Rockwell Automation, Level 14, Core F, Cyberport 3, 100 Cyberport Road, Hong Kong, Tel: (852) 2887 4788, Fax: (852) 2508 1846

Publication VPC-IN001C-EN-P - February 2020
Supersedes Publication VPC-IN001B-EN-P April 2017

Copyright © 2020 Rockwell Automation, Inc. All rights reserved. Printed in the U.S.A.