TL-Series Motor Transition Plate

(Catalog Numbers TL-TRPLAT-17-23, TL-TRPLAT-23-34, and TL-TRPLAT-34-42)

This publication provides instructions to attach the TL-Series Transition Plates to TL-Series NEMA motors.

The TL-Series Motor Transition Plate allows a TL-Series NEMA motor to physically replace an N-Series motor. It converts the mounting bolt hole pattern from a TL-Series NEMA pattern to an N-Series NEMA bolt hole pattern. This allows the original mounting holes in the machine to be used to mount the replacement motor.

This document applies to the transition plates, motors, and mounting hardware identified by these catalog numbers:

Catalog Number	**Description**	**Compatible Motors From N-Series to TL-Series NEMA**	
TL-TRPLAT-17-23	TL-Series Transition Plate, NEMA 17 to 23	N-22*xx*	TL-A1*xx*P-xxxxN
TL-TRPLAT-23-34	TL-Series Transition Plate, NEMA 23 to 34	N-34*xx*	TL-A2*xx*P-xxxxN
TL-TRPLAT-34-42	TL-Series Transition Plate, NEMA 34 to 42	N-42*xx*	TL-A25*xx*P-xxxxN

Transition plates are not available for the N-56*xx* motors.

TL-TRPLAT-17-23

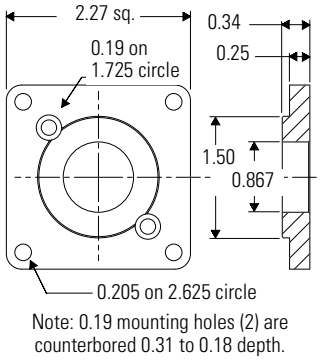

Note: 0.19 mounting holes (2) are counterbored 0.31 to 0.18 depth.

TL-TRPLAT-23-34

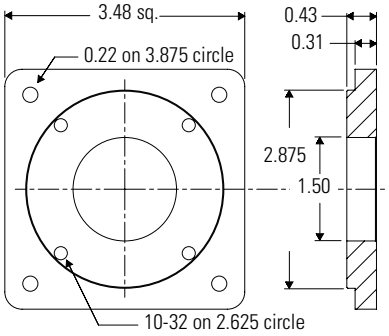

TL-TRPLAT-34-42

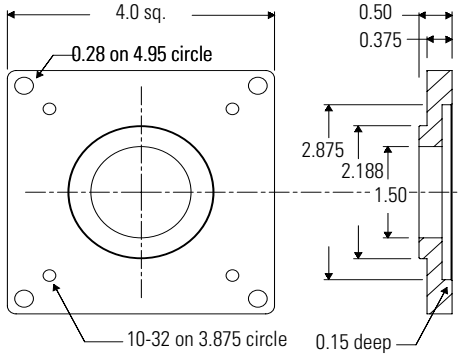

Note: The standoff resulting from the transition plate depth reduces the shaft extension on the TL-Series NEMA motor to the nominal shaft extension of an N-Series motor.

Installation Instructions

To attach an transition plate to a TL-Series NEMA motor:

ATTENTION

Energy may be stored in a drive system after power is removed.

Before disconnecting mechanical or electrical connections to a motor, remove power from the drive system and allow the bus capacitance to discharge for the time indicated on the front of the drive.

Failure to observe safety procedures could result in personal injury or equipment damage.

1. Align the mounting holes in the transition plate with those in the TL-Series NEMA motor.

2. Insert the mounting screws from the proper direction, and then torque each screw to the appropriate value.

   - TL-TRPLAT-17-23 requires two screws through the face of the transition plate and into the front of the motor mount.
   - TL-TRPLAT-23-34 and TL-TRPLAT-34-42 require four screws through the back of the motor mount and into the rear of the transition plate.

Catalog Number of Transition Plate	Mounting Hardware	Torque Requirements
TL-TRPLAT-17-23	Two 8-32 cap screws	3.0 - 3.7 Nm (27 - 33 lb-in.)
TL-TRPLAT-23-34	Four 10-32 cap screws	6.1 - 7.5 Nm (54 - 66 lb-in.)
TL-TRPLAT-34-42		

Refer to the TL-Series Servo Motor Installation Instructions (publication TL-IN001*x*-EN-P) for detailed information on mounting, maintaining, and troubleshooting a TL-Series NEMA motor. To obtain a copy, contact your local Rockwell Automation office or distributor, or access the document on-line at **http://www.rockwellautomation.com/literature**.

For more information refer to our web site: **www.ab.com/motion**
For Allen-Bradley Technical Support information refer to: **www.support.rockwellautomation.com** or Tel: (1) 440.646.5800

Allen-Bradley, and A-B are registered trademarks of Rockwell Automation.

www.rockwellautomation.com

Power, Control and Information Solutions Headquarters

Americas: Rockwell Automation, 1201 South Second Street, Milwaukee, WI 53204-2496 USA, Tel: (1) 414.382.2000, Fax: (1) 414.382.4444
Europe/Middle East/Africa: Rockwell Automation, Vorstlaan/Boulevard du Souverain 36, 1170 Brussels, Belgium, Tel: (32) 2 663 0600, Fax: (32) 2 663 0640
Asia Pacific: Rockwell Automation, Level 14, Core F, Cyberport 3, 100 Cyberport Road, Hong Kong, Tel: (852) 2887 4788, Fax: (852) 2508 1846

Publication TL-IN002A-EN-P — December 2004

P/N 9101-0465-001

Copyright © 2004 Rockwell Automation. All rights reserved. Printed in USA.