Installation Instructions

Original Instructions

Allen-Bradley by ROCKWELL AUTOMATION

Type LA and XA (Series C) Limit Switch

Bulletin Number 802PR

Prewired cable

Prewired receptacle

Conduit coupler

Threaded conduit opening

Hazardous Location Switches

Switches for hazardous locations meet Division 2; Class I Groups A, B, C, and D; Class II, Groups F, and G; and, Class III requirements. For additional information, see Publication GI-2.8 — A Summary of National Electrical Code Requirements for Hazardous Locations.

Figure 1 - Typical Sensing Characteristics

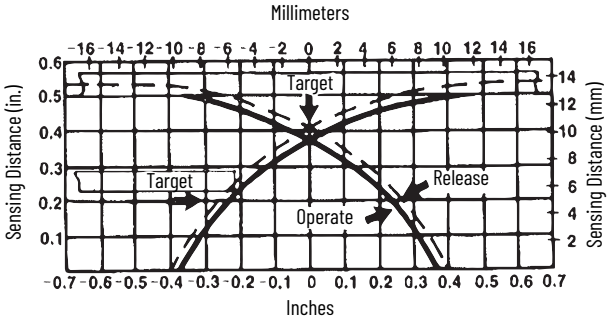

Figure 2 - Typical Sensing Distance vs. Target Size for Various Metals

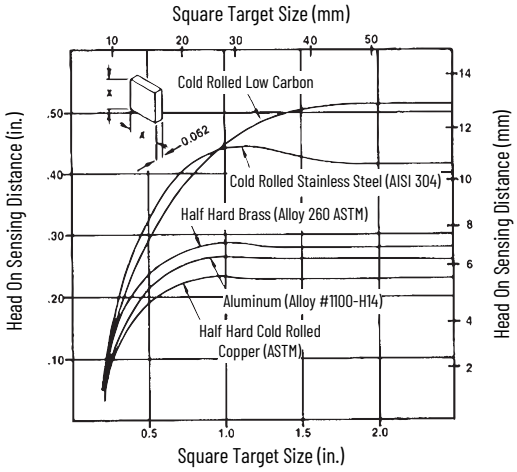

Spacing Between Switches

When switches are installed side by side or face to face, maintain the minimum spacings as shown in Figure 3.

Figure 3 - Minimum Spacing

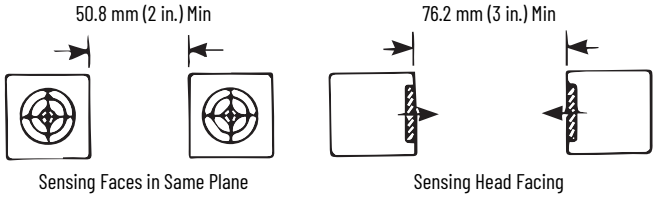

Effects of Nearby Metal Surfaces on Sensing Distances

The sensing distance increases if the proximity switch is installed so that metal is near the sensing head surfaces, as shown in the following illustrations.

Metal is near one side of head. Sensing distance D increases approximately 2%.

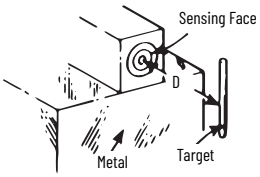

Metal surrounds head. Sensing distance D increases approximately 10%.

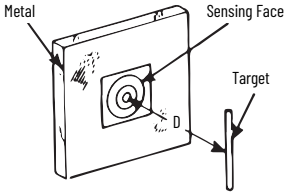

Metal surrounds switch. Sensing distance D increases approximately 8%.

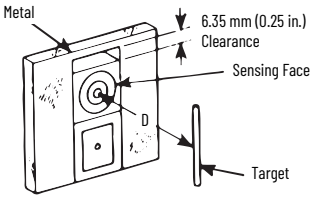

Rockwell Automation

ATTENTION: If a hazardous condition can result from unintended energization of this device, access to the sensing area must be guarded.

Wiring

Connect the proximity switch and load as shown in Figure 4 using 0.75...2.5 mm^2 (18...14 AWG) wire. The light-emitting diode (LED) of the switch is on when the load is energized.

Figure 4 - Typical Connection Wiring Diagram

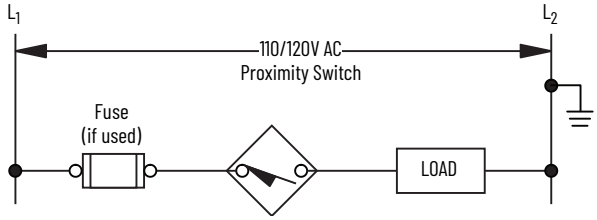

To guard against the load remaining energized when the switch is in an open condition, the minimum load release current must be greater than the maximum leakage current of the proximity switch.

Grounding

The 802PR limit switch does not require a ground connection. The load side of the 110/120V AC source can be grounded as shown in Figure 5.

Shortcut Circuit Protection

We recommend using a fast acting Type KAW10 or KAX10 fuse in the circuit to provide short circuit protection for the switch.

Series Connected Switches

Normally Open Fixed Output

Do not connect two or more switches in a series. Doing so can result in erratic operation.

Programmable Normally Open (N.O.)/Normally Closed (N.C.) Output

Two switches can be connected in series with a load. For proper operation, the operating load voltage must be less than or equal to the minimum supply voltage less the sum of the on-state voltage drops across the series connected proximity switches. The load energizes when the output LEDs of both proximity switches are on.

Figure 5 - Connection Diagram

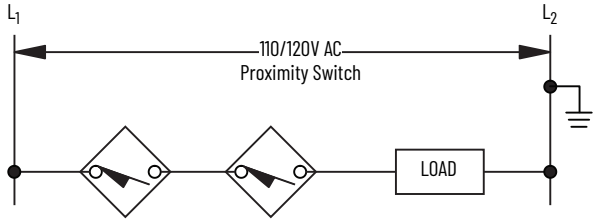

Specifications

Description	Output Mode	
	Fixed N.O.	Programmable N.O./N.C.
Operating voltage range	102...132V, 50/60 Hz	60...132V, 50/60 Hz
Load current	Max continuous: 1 A to 40 °C (104 °F) linearly derated to 0.5 A at 75 °C (167 °F) Max inrush: 10 A, 1 second max Min: 0.025 A	
Max leakage current (load off)	0.0065 A	0.0035 A
Max voltage drop (load on)	7.5V	
Operating temperature range	-25...+75 °C (-13...+167 °F)	
Max operate time	25 ms	25 ms
Max release time	35 ms	25 ms
Delay on power-up target present	20 ms, typical (no output occurs with target absent)	
Sensing distance	Steel: 13.33 mm (0.525 in.) +10% -5% (Figure 1 on page 1) Nonferrous metals: 6.35 mm (0.25 in.) typical	
Hysteresis (operate – release differential)	1.9 mm (0.075 in.) max	
Sensing distance drift with temperature	±5% 0...75 °C (32...167 °F) ±10% -25...+75 °C (-13...167 °F)	±5% 15...50 °C (59...122 °F) ±10% -25...+75 °C (-13...+167 °F)
Max sensing distance drift with voltage	±0.5% 102...132V	±1% 90...132V ±3% 60...132V
Repeat accuracy (10 successive operations)	0.03 mm (0.001 in.) max deviation at constant temperature and supply voltage	
Operating speed (operations per minute)(1)	1000	1200

(1) Based on max operate and release time

ATTENTION: Do not connect two or more 802PR limit switches in parallel. Doing so can result in erratic operation.

Programmable Output Selection

The programmable N.O./N.C. proximity switch is factory preset in either the normally open or normally closed output mode. To change the switch output mode:

1. Remove the lower legend plate on the front of the switch.
2. A line on the recessed rocker indicates the output mode of the switch. To change the output, depress the recessed rocker of the switch with a pointed tool.

   Do not use a tool with a point that can break and jam the switch.

3. Replace the lower legend plate.

Figure 6 - View of Rocker Switch

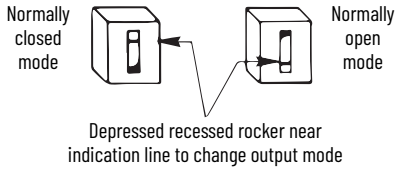

To return the output mode to its original setting, simply reverse the previous procedure. The output LED is on when the switch output is conducting.

Hard Wired Contacts

A surge suppressor must be connected in parallel with the load when hard wired contacts are connected in parallel with the 802PR limit switch. Surge suppression is not required when hard wired contacts are connected in series with the load. For recommended surge suppressors for various devices, see publication PROX-TD001.

Hard wired contacts that are operating in series or parallel with the Bulletin 802PR Type LA or XA limit switch cause a delay of approximately 200 ms. This power-up delay reduces the maximum number of operations per minute and can result in a momentary de-energization of the load.

Conduit Coupled Switches

Threaded conduit opening bases are suitable for use with flexible conduit. Conduit coupler bases are suitable for use with both flexible conduit and rigid conduit. Both bases connect to 12.7 mm (0.5 in.)-14 NPT threaded conduit. Switches with catalog numbers that contain a 'S6' suffix are suitable for connection to ISO 20-1.5 threaded conduit.

Prewired Cable Switches

This type of switch includes a prewired cable for connection directly into a junction box. The cable is a two-conductor, oil-resistant thermoplastic (STO).

Prewired Receptacle Switches

This type of switch includes a prewired receptacle suitable for use with the connector-cable assemblies that are listed in Table 1. Figure 7 indicates which two pins of the receptacle are wired internally to terminals 1 and 2. The third pin is not used.

Table 1 - Connector Cable (Supplied by User)

Manufacturer	Connector Cable Part Numbers		
	0.9 m (3 ft) cable	1.8 m (6 ft) cable	3.7 m (12 ft) cable
Standard Color Code (green, black, white)			
Brad Harrison	40901	40902	40903
Joy	X8984-3	8984-4	8984-5
CAM-LOK	E2057-624	E2057-625	E2057-626
Automotive Color Code (green, red, red)			
Brad Harrison	40958	40959	40960
Joy	X8984-13	X8984-14	X8984-15
CAM-LOK	E2057-824	E2057-825	E2057-826

Figure 7 - End View of Prewired Receptacle

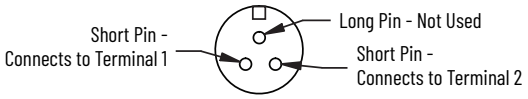

Troubleshooting Guide

The following guide provides basic troubleshooting information for installation and use of the proximity switch. If a problem occurs, attempt to determine the possible cause, as listed, and apply the suggested solution.

The switch can continue to operate even if the LED is damaged (will not light).

Symptom	Output LED[1]		Possible Cause	Solution
	N.O.	N.C.		
Load does not energize	OFF	OFF	Power supply is off.	Apply power.
	OFF	ON	Incorrect voltage applied.	Apply the correct voltage.
	OFF	OFF	Broken wires or loose connections.	Repair wiring or tighten loose connections.
	OFF	On	Improper wiring.	Recheck connection diagrams. Rewire accordingly.
	OFF	–	The target is too small or out of sensing range.	Increase the target size or move target or switch within sensing range.
	–	OFF	A target or metal object is within sensing range.	Remove target or metal object. See Effects of Nearby Metal Surfaces on Sensing Distances on page 1.
	OFF	OFF	Two or more proximity switches are placed too close together.	Move the sensing faces of the switches apart. See Spacing Between Switches on page 1.
	ON	ON	Load device is faulty or incorrect.	Replace the load or size load correctly.
Load does not de-energize	ON	–	A target or metal object is within sensing range.	Remove target or metal object. See Effects of Nearby Metal Surfaces on Sensing Distances on page 1.
	–	ON	The target is too small or out of sensing range.	Increase the target size or move target or switch within sensing range.
	ON	ON	Two or more proximity switches are placed too close together.	Move the sensing faces of the switches apart. See Spacing Between Switches on page 1.
	ON	OFF	Improper wiring.	Recheck connection diagrams. Rewire accordingly.
	OFF	OFF	Load device is faulty or incorrect.	Replace the load or size load correctly.
Load energizes and de-energizes intermittently	ON and OFF intermittently		Broken wires or loose connections.	Repair wiring or tighten loose connections.
			The target fluctuates in and out of sensing range and hysteresis zone.	Stabilize the target within the sensing range. See Hysteresis in Specifications on page 2.
			Two or more proximity switches are placed too close together.	Move the sensing faces of the switches apart. See Spacing Between Switches on page 1.

(1) Programmable N.O./N.C. switches have two LEDs. The power LED is ON when power is applied.

Figure 8 - Mounting Dimensions (mm [in.])

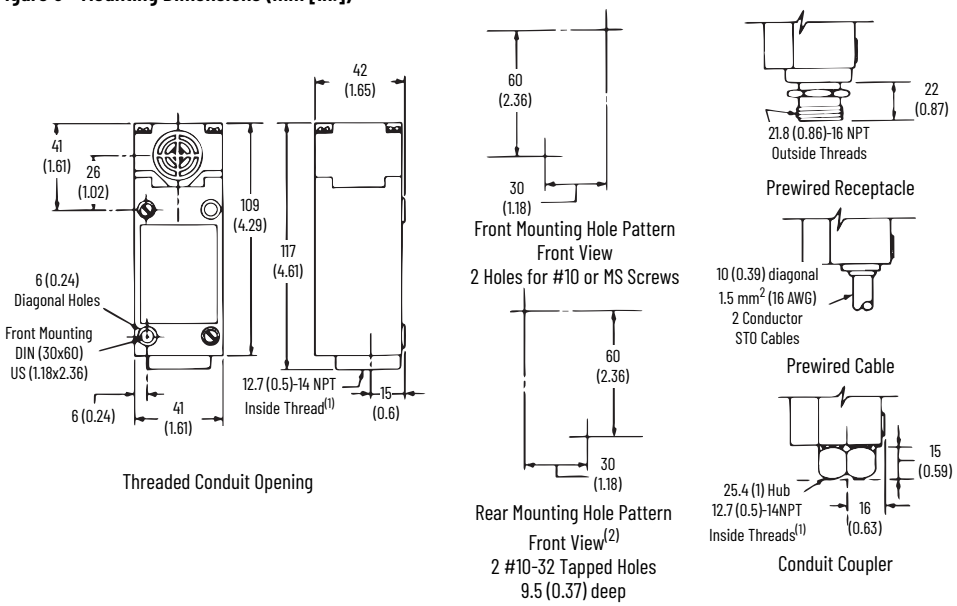

(1) Also available with ISO 20-1.5 threads.
(2) Type LA only.

Waste Electrical and Electronic Equipment (WEEE)

At the end of life, this equipment should be collected separately from any unsorted municipal waste.

Rockwell Automation maintains current product environmental compliance information on its website at rok.auto/pec.

Your comments help us serve your documentation needs better. If you have any suggestions on how to improve our content, complete the form at rok.auto/docfeedback.
For technical support, visit rok.auto/support.

Rockwell Otomasyon Ticaret A.Ş. Kar Plaza İş Merkezi E Blok Kat:6 34752, İçerenköy, İstanbul, Tel: +90 (216) 5698400 EEE Yönetmeliğine Uygundur

Connect with us.

rockwellautomation.com — expanding **human possibility**®

AMERICAS: Rockwell Automation, 1201 South Second Street, Milwaukee, WI 53204-2496 USA, Tel: (1) 414.382.2000, Fax: (1) 414.382.4444
EUROPE/MIDDLE EAST/AFRICA: Rockwell Automation NV, Pegasus Park, De Kleetlaan 12a, 1831 Diegem, Belgium, Tel: (32) 2 663 0600, Fax: (32) 2 663 0640
ASIA PACIFIC: Rockwell Automation, Level 14, Core F, Cyberport 3, 100 Cyberport Road, Hong Kong, Tel: (852) 2887 4788, Fax: (852) 2508 1846

Publication 802PR-IN002B-EN-P - July 2021 | Supersedes Publication 802PR-IN002A-EN-P - July 2013

77050-001-01 Ver 06