Installation Instructions

Original Instructions

Allen-Bradley

Light Arrays

Catalog Numbers 45MLA-F, 45MLA-CTRL-100F

WARNING: Controller/Light Array systems are not safety systems. Any use for the protection of people is forbidden.

Controller/Light Array systems can only achieve their function if the instructions given in this Operation Manual, and any referenced documents, are followed exactly. Also consult the valid laws and regulations at the time of installation.

The non-observance, or partial observance, of these instructions can lead to a premature malfunction of the system. The installer or system integrator is held fully responsible for the results of a non-compliant installation.

This manual is part of the Controller/Light Array system. It must be kept accessible with any other machine documentation during its entire lifecycle. Be sure it is made available to all personnel responsible for assembly, installation, operation, and maintenance of the system.

IMPORTANT Follow the instructions that are provided in this manual carefully. The non-observance of these instructions can cause customer complaints and/or serious call backs. Always keep these installation instructions on site.

Introduction

Light arrays from this series reliably and rapidly measure an object. When measurement is completed, the highest measured values are communicated to a PLC. Figure 1 shows a typical application.

Figure 1 - Typical Application

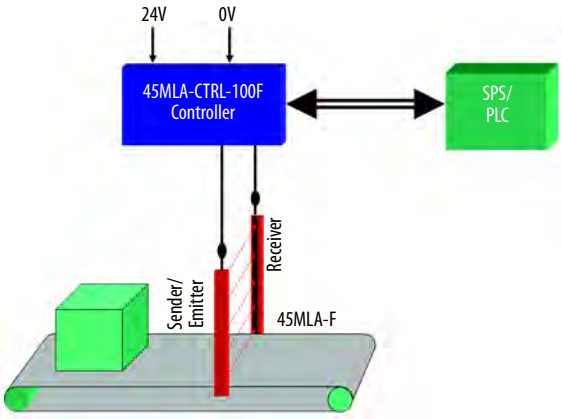

The controller transmits data in serial mode, through a so-called handshaking protocol. This protocol means that the data transmission can be done simply, with any PLC, over two inputs and two outputs. Therefore no RS-232, RS-485, RS 422 Interface, nor bus system is required. Transmission of the saved height measurement to a PLC takes only 60...90 ms.

To confirm an efficient transmission, only the highest interrupted beam information is communicated. This transmission is possible because the controller contains a measured-value memory; after a measurement period, the highest value is transmitted. The PLC determines the duration of measurement and does not limit it.

Figure 2 - Controller and Light Array (Emitter)

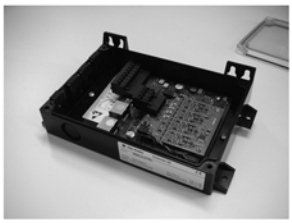

45MLA-CTRL-100F
Controller

45MLA-F
Light Array

Special Features

The outstanding characteristics of the Light Array system are:

- Universal handshake interface
- Fast height measurements
- Removable DIN rail mounting bracket for wall mounting
- IP54 controller (depending on the mounting option)
- Wide temperature range
- Universally applicable
- Standalone solution (the controller does not need to be installed in a control cabinet)
- Optical interface for fast software configuration
- Light arrays available in various pitches
- Light array length: n x 50 mm (1.97 in.)
- Cascaded systems possible
- Additional pitches adjustable on the controller
- Compact light array housing
- Special optic to reduce mirrored reflections
- Slim aperture confirms the detection of small objects
- Large operating range
- Robust construction
- Optical interface
- Up to 255 beams
- Light arrays with connector termination
- Integrated diagnostic-indicators in the light array
- Modern technology

Applications

Typical Applications

The Light Array system is specially designed for applications in:

- Conveyor systems
- Storage systems
- Sort systems
- Paint systems

Typical application areas are:

- Wood measurement
- Quality control
- Transport systems
- Automatic storage systems

In different industries:

- Metal processing
- Paper processing
- Wood processing
- Textile industry

And every situation in which a distance or height must be measured quickly and precisely.

Application Restrictions

The Light Array system height measuring system is not intended for applications in explosive (EX) or in radioactive environments.

The light array operates in a temperature range between -20...+55 °C (-4...+131 °F) (noncondensing). For the controller, a temperature range of 0...55 °C (32...131 °F) is allowed. An excellent reliability operation is possible in any mounting orientation.

For a professional installation and connection, consult the relevant laws and regulations. You can also address any queries to our extensively trained employees.

Equipment Specifications

Controller

Figure 3 shows the dimensions of the Controller. The housing is sealed according to IP54 (EN 60529).

Figure 3 - Dimensions of the Controller [mm (in.)]

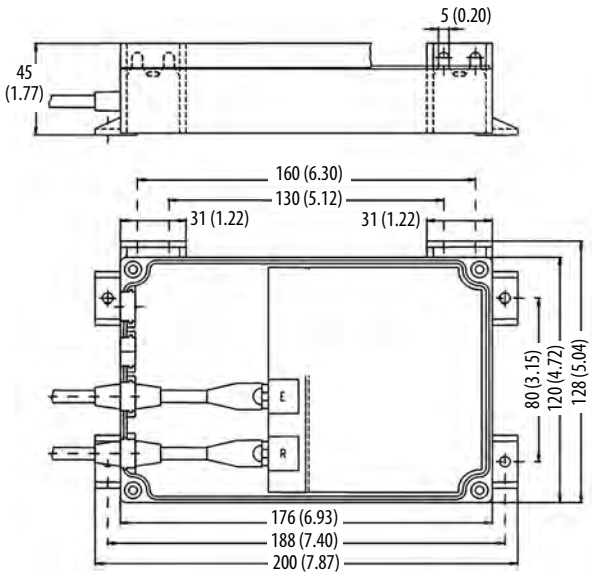

Figure 4 shows the position of the housing on a DIN rail. If necessary, the DIN rail-mounting bracket can be removed.

Figure 4 - Position of the Controller on a DIN Rail [mm (in.)]

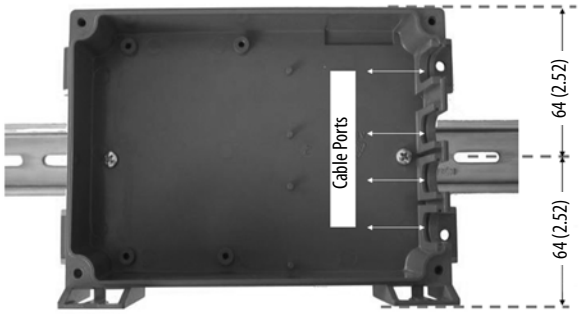

Light Array

The Controller can be connected to the following types of light arrays:

- 45MLA-F
- 45MLA-T

The Light Array has the following special properties:

- Flange profile (see Figure 6)
- The distance between the middle, of the lowest beam, and the end of the profile is 7 mm (0.27 in.).
- The first lens at the end of the profile is always active.

In this installation, we only discuss the properties of the Light Array. For more information on the Light Array, contact your local distributor.

Figure 5 - Light Array Housing Dimensions (Emitter and Receiver) [mm (in.)]

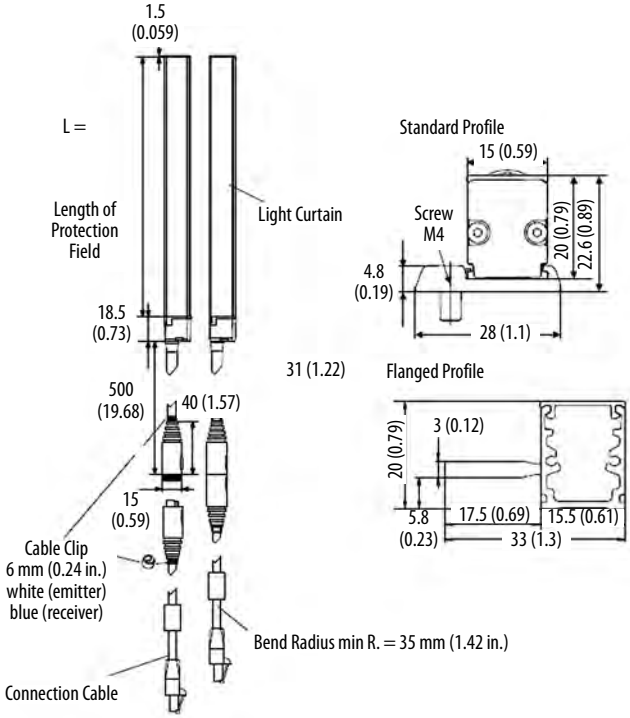

The profile flange has recessed holes for mounting with pan head washers (see Figure 6 and Figure 7).

Figure 6 - Profile of the Light Array (Transmitter and Receiver) [mm (in.)]

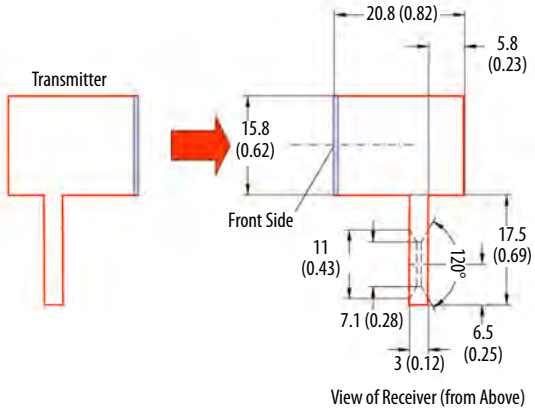

Figure 7 - Mounting with Pan Head Washers

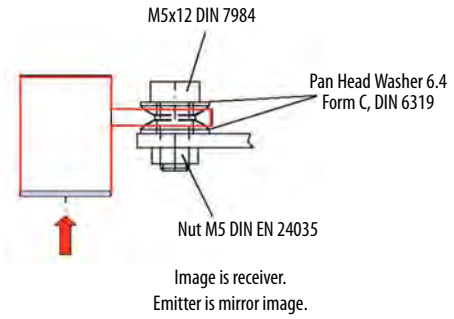

The flange also features an additional, smaller hole (a reference hole). With a pin, use the extra hole to mount the light array at a specific height. The following figure shows the position of the mounting holes and the reference hole.

Figure 8 - Position of the Mounting and Reference Holes [mm (in.)]

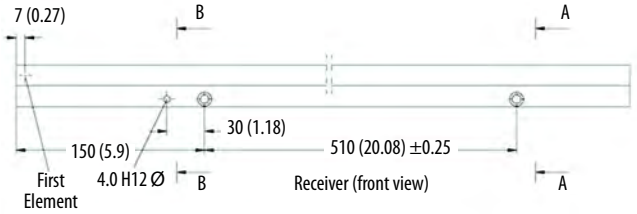

If necessary, additional mounting holes are available for longer systems (if mechanically possible) with a pitch of 510 mm (20.08 in.).

The 45MLA-CTRL-100F light array system is offered in the following pitches:

- 10 mm (0.39 in.)
- 25 mm (0.98 in.)
- 37.5 mm (1.48 in.)

Not every lens visible in the light array is necessarily active. In other words, various types of light arrays can look identical from the outside, but can contain different electronic components.

IMPORTANT The pitch that is built in the light array is indicated on the light array label (see Figure 9).

Figure 9 - Label on the Light Array System

IMPORTANT Before operating a controller, it is essential to set the DIP switch settings (see the DIP Switch Settings on page 6 section) and the pitch of the attached light array. Any erroneous DIP switch setting can result in a false height measurement. This error, in turn, can result in significant damage to the storage system.

Connections and Terminal Positions

Controller

Figure 10 shows the connection diagram of the Controller to a PLC.

Figure 10 - Connection Diagram for Controller

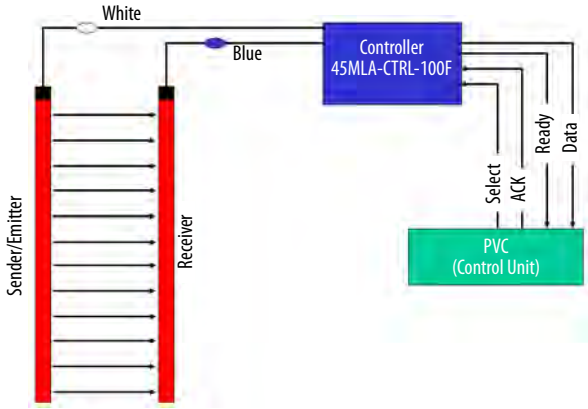

If several Controllers are connected to a PLC, each Controller can be selected separately using the Select wire.

Figure 11 - Connection Diagram for Multiple Controllers on One PLC

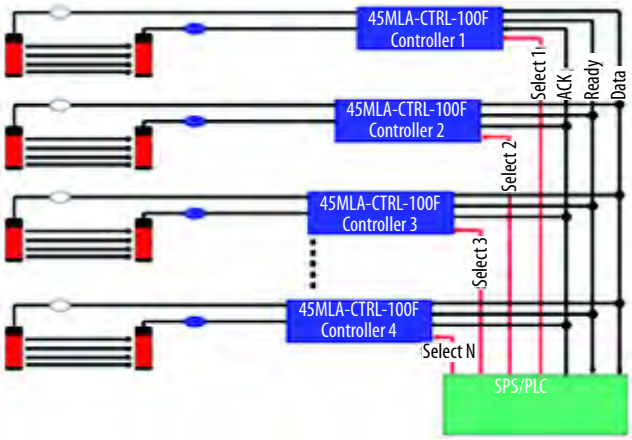

Use the appropriate selection input on each controller, the height measurement process is stopped. Communication with the controller now begins (see the Interface on page 7 section).

Figure 12 shows the terminal position for the power supply, the interfaces, and the emitter and receiver connections. The potentiometers that are shown have no function in the Controller.

Figure 12 - Control Terminal Position

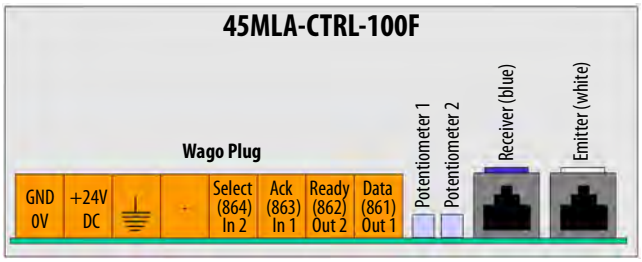

IMPORTANT The Light Array and Control systems are designed so that the ground connection can be made either over the light array profile (use the mounting bracket) or via the controller. If the system is grounded both on the profile and through the controller, you can create ground loops. For this reason, we recommend that you initially avoid making the ground connection on the controller. If the profile is not grounded, then a connection to ground in the controller is recommended.

In some instances, grounding the controller (connect to the earth) can ultimately reduce Electro Magnetic Compatibility (EMC) disturbances in the system.

Light Array

The connection of the light arrays to the controller is only possible with the connector that is supplied by Rockwell Automation. For longer systems, Rockwell Automation supplies 1 m and 3 m (3.28 ft and 9.84 ft) extension cables. The cables for the emitter (white marking) and receiver (blue marking) can reach a maximum length of 10 m (32.8 ft). Different cables lengths for the emitter and receiver components do not negatively impact the functionality of this system.

Figure 13shows the M12 connection for the transmitter (white) and the receiver (blue).

Figure 13 - M12 Connections for Transmitter (White) and Receiver (Blue)

If you invert the connections by mistake, the terminals do not damage any electronic component. The light arrays can even be attached after the controller has been powered-up. In such a case, however, the controller must be powered up again to confirm proper communication during transmission.

Display Elements

Status indicator elements are present on the controller and on the light arrays.

Controller

Positions of the status indicator (D1 to D7) on the controller are shown in Figure 14.

Figure 14 - Status Indicator (D1 to D7) and Jumpers J1 and J2

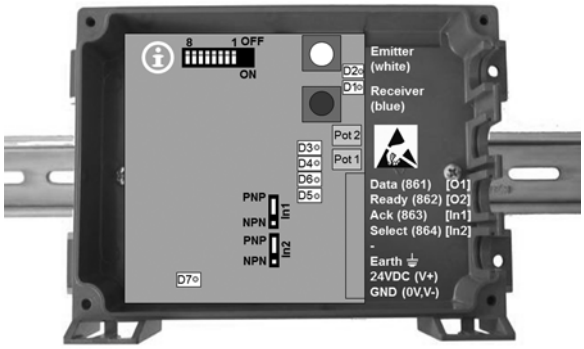

Indicator	Color / Meaning	Color / Meaning
D1	Green: light array that is not interrupted Green blinking: Intensity inadequate	Off: light array that is interrupted
D2	Red: light array that is interrupted Red blinking: Height measurement failure	Off: light array that is not interrupted
D3	Green blinking: Communication present	Off: No communication
D4	Green blinking: Communication present	Off: No communication
D5	Green blinking: Communication present	Off: No communication
D6	Green blinking: Communication present	Off: No communication
D7	Green: Power on	Off: Power off

Light Array

The emitter and receiver light arrays feature two additional indicators near the cable input.

Figure 15 - Emitter and Receiver Status Indicators

The two lights near the cable input correspond to the D1 and D2 indicators in the controller and indicate the following conditions:

Condition	Green Indicator	Red Indicator
Light array that is not interrupted	On	Off
Light array that is interrupted	Off	On
Failure in height measurement system (See Diagnostics and Solutions on page 10)	Off	Blinking
Inadequate intensity	Blinking	Off
Power off or light array not attached	Off	Off

The Diagnostics and Solutions section offers additional information about specific problems shown by the status indicators.

Jumper Settings

Figure 14 also shows two jumpers (J1 and J2) and a DIP switch. These jumpers are present only on some hardware versions of the light array.

If they are present, both of these jumpers (J1 and J2) define the logic (PNP or NPN) of the inputs to the controller.

For handshake communication with the controller, both jumpers must be set to the PNP position.

DIP Switch Settings

Figure 14 shows a DIP switch with eight switches.

Switches 1 to 4 allow the software to increase the active pitch dimension of the light array. This change means that the measurement pitch can be set to any multiple of the hardware pitch: 10 mm (0.39 in.), 25 mm (0.98 in.), and 37.5 mm (1.48 in.).

Example:

A light array with a 25 mm (0.98 in.) hardware pitch is connected to a controller. However, the application requires a measuring pitch of 75 mm (1.67 in.). If the DIP switch is set to factor three, the software is only evaluated every third beam. The measuring pitch can be calculated with the following formula:

[Measurement pitch] = Factor x [Hardware pitch]

The hardware pitch is shown on the light array label.

Table 16 - DIP Switch Positions for the Setting the Pitch

Factor	Switch 1	Switch 2	Switch 3	Switch 4
1	off	off	off	off
2	on	off	off	off
3	off	on	off	off
4	on	on	off	off
5	off	off	on	off
6	on	off	on	on
7	off	on	on	off
8	on	on	on	off
9	off	off	off	on
10	on	off	off	on
11	off	on	off	on
12	on	on	off	on
13	off	off	on	on
14	on	off	on	on
15	off	on	on	on
16	on	on	on	on

DIP switches 5 and 6 define how many measurement pitches (on the side where the cable is located) are ignored. They allow you to define a "blind" area that is not influenced on the system output. The following table describes the functionality of this system.

Ignored Pitches[1]	Switch 5	Switch 6
0	off	off
1	on	off
2	off	on
3	on	on

1 Number of ignored measured pitches near the cable input.

DIP switches 7 and 8 have no function currently.

IMPORTANT A change of the DIP switch settings will only be acknowledged after a power-up.

Before the first start-up of the controller it is important to verify the DIP switch setting and the hardware pitch value (= pitch length) of the connected light.

A wrong DIP switch setting can lead to erroneous measurements, which in turn can result in significant consequential losses to the installation (see the 45MLA-CTRL-100F Light Array System on page 11).

TIP The number of beams of the attached light array must be larger or equal to the value [Factor+1]. This consideration means that as a minimum two beams must be active in any light array system.

Interface

Communication Content

For each light array scan, the Controller determines the highest interrupted beam and compares this value with the previous light array scan. If the most recent scan value is higher than the previous scan value, then this value is stored in memory. Thereafter the Select input is monitored to see if it's high. If it is high, the value that is stored in memory is transmitted, this representing the number of the highest interrupted beam (not the lowest beam).

Figure 16 - Flowchart of the SW Process

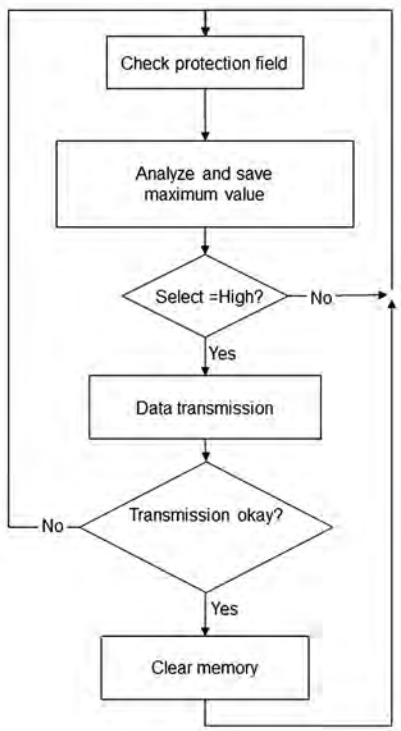

After a successful transmission, the stored value is deleted from memory, and another measurement is immediately made. The PLC determines the time when communication starts (momentary setting of the Select signal; min. 20 ms).

The height measurement duration is not limited. Theoretically the height measurement could be made over many hours, and at the end of this period, the highest measured value over the entire period is transmitted.

Type of Interface

The Controller transmits in serial mode, and sends the results in a 6-bit or 9-bit code (8 bits for data + one parity bit). The actual number of bits depends on the number of beams in the connected Light Array.

Communication takes place with a handshake process over four wires: Select, Data, Ack, and Ready. Figure 17 on page 7 shows the associated flow diagram for the Handshake protocol.

This protocol means that the data transmission takes place with every standard PLC with two inputs and two outputs. No RS-232, RS-485, RS 422, or other bus system is required for communication.

Figure 17 - Flow Diagram for the Handshake Protocol

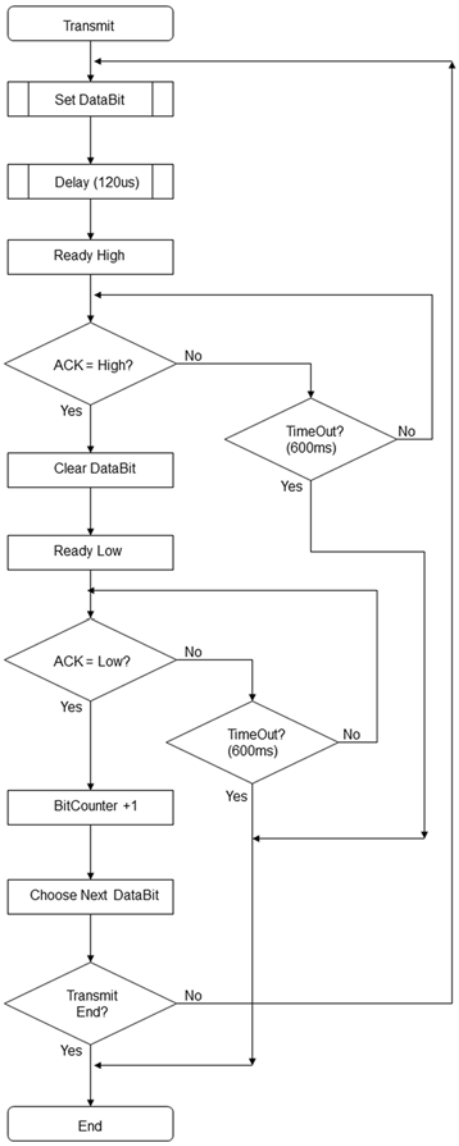

For light arrays with a beam number ≥ 32, the handshake communication takes place with a 9-bit sequence. After the eighth bit, a parity bit is transmitted (parity: odd).

Figure 18 - Example of the Signal Sequence for 8-bit Transmission

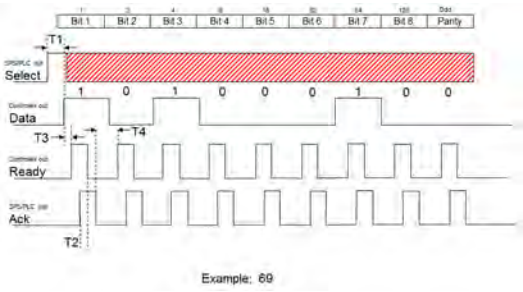

For light arrays with a beam number ≤ 31, communication is effected through a 6-bit sequence. In this case, the transmission takes place without the parity bit. To detect a breakage of the Data wire, the measurement result is transmitted with an offset of 32 beams (hex 20).

Figure 19 - Example for 6-bit Transmission

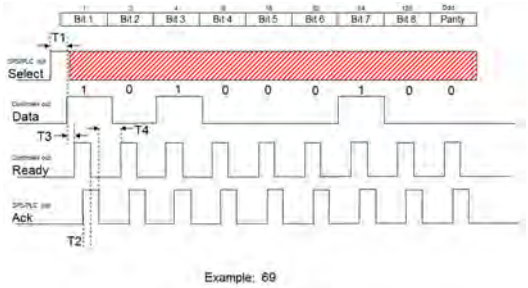

A transmission only contains information for the highest interrupted beam, and not the lowest interrupted beam.

The times that are mentioned in Figure 17 and Figure 18 are specified as follows:

T1: The time from which the PLC applies the Select signal, until the transmission takes place. The PLC Select signal can be applied to the controller for a short time (for minimum, see the Controller table). If the Select signal is continuously "High," the value that is stored in memory is continuously communicated. In order for the communication to be conducted once, the T1 time for the PLC and the Select signal must be larger than the minimal value. The T1 time must also be smaller than the maximum value of the communication duration.

T2: The time from which the PLC applies the Ack signal, until the controller Ready signal goes to "Low."

T3: The time from applying the Data signal until the Ready signal goes to "High."

T4: The time from which the Ack signal from the PLC = "Low" until the "Ready" signal from the controller = "High." This feature represents the time from when the last bit is read, until the point in time when the new data bit is available.

If the Controller suddenly stops receiving an answer while communicating with the PLC (t > Time out, see the Controller section), the controller terminates the communication. The Controller stores the current value in memory, and continues to make additional height measurements until the next PLC Select signal (Figure 16 on page 7) is received.

More detailed timing information and additional properties of the inputs/outputs can be found in the section called Technical Data: Controller (see page 11).

Communication Duration

The controller and the PLC determine the time required to transmit a value that is saved in memory. A typical value for a light array with 32 beams or less (6-bit transmission) lies between 30...60 ms. For a light array with 32 beams or more, the communication takes place in an 8-bit + parity bit pattern. A typical transmission time for such a case lies between 45...90 ms.

The mentioned transmission times are a minimum time. If the Controller does not receive an answer (Ack), within a programmed time (Time Out), it terminates the transmission, and waits for the next transmission (see the flowchart in Figure 16 on page 7).

Speed of Measurement

When developing the Laser Array family of products, special attention was paid to confirm a fast speed of measurement for the system. Because of high scan rates, the heights of even small objects are reliably detected.

For instance, a light array with 30 beams is able to detect an object with 5 mm (0.2 in.) diameter. This detection occurs even when the object moves through the light array at a speed of 0.5 m/s.

The speed of measurement (T) can be roughly calculated using the number of beams (N), the scan speed per beam (t_S) and the analysis speed (t_A):

$$T = N \times t_S + t_A$$

For, t_S and t_A, we can assume the following approximate values:

$t_S = 65\ \mu s/beam$

$t_A = 230\ \mu s$

For more detailed information about speed of measurement, contact your nearest sales office.

Information for Initial Installation

Controller

Plug-in terminal blocks allow a fast and user-friendly connection process. This type of block allows you to connect the individual wires.

Figure 20 - Both Sides of a Terminal Block

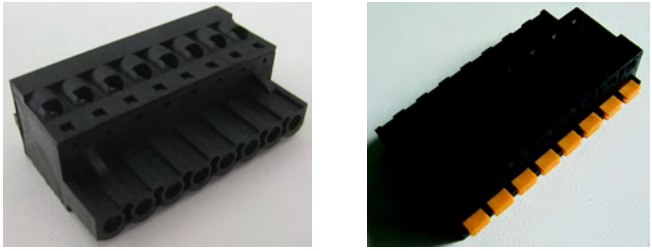

During the initial installation of the controller, the following precautions must be observed:

- Supply voltage must be +24V DC
- If a jumper is present: control the jumper setting
- Make the DIP switch setting
- To reduce the danger of electromagnetic disturbances, carefully confirm that the connecting cables are not lying next to the high-power circuit cables.

Light Indicators

The light arrays also feature an intensity indicator. If one of the green lights near the cable input of the emitter/receiver, and the green D1 light on the controller blink, then the intensity is in a critical area.

IMPORTANT Evaluation of the intensity can only be performed when no object is interrupting the light array. The evaluation of the intensity only happens during the interval between power-up and the first Select signal from the PLC. Once the first Select signal is detected, the intensity is no longer evaluated. The result of the measurement before detecting the first Select signal remains stored. This condition means that a machine, which communicates after power-up, only displays the intensity level that was detected immediately (if the light array is uninterrupted).

During the initial exploitation of the 45MLA-F light array, observe the following precautions:

- Do not swap the emitter and receiver cables
- Select cable lengths not longer than 10 m (32.8 ft)
- Do not pinch or mechanically stress the cables
- Do not mechanically stress the light arrays (torsion or bend)
- Pay attention to intensity diodes only until the first PLC transmission
- Make sure that the connecting cables are not lying next to the high-power circuit cables

ATTENTION: To minimize ESD damage, ground or shunt the controller and use static control packaging and material handling products. Dissipate and neutralize by grounding, ionization, and the use of conductive and dissipative static control materials.

Diagnostics and Solutions

Problem	Reason	Solution
No function, no indicator diodes active in controller	No supply voltage	Check the power supply
No indicator light active in light array emitter or receiver	No cable connection to emitter or receiver	Check the cable connection to emitter or receiver Replace cables if necessary
Indicator in the light array is always red although the light array is not interrupted	Emitter and receiver are misaligned by 180°	Turn emitter or receiver 180°
	System insufficiently aligned	Correct alignment
	Lens that is blocked or dirty	Clear optical path
	Special Lean Lift (for example, with roll door)	When the roll door is closed, the light array is always interrupted
	Defective element	First remove the light array emitter and receiver, and position them against each other. If the indicator in the emitter and receiver remains red, then a misalignment can be ruled out. If so, replace emitter and receiver. If necessary, replace cables.
	Defective controller	Replace controller
Indicator D2 red, blinking (system disturbance)	Emitter and/or receiver light array incorrectly connected	Is the red indicator in the emitter and receiver also blinking? If not, test the light array connection. If yes, then the emitter and receiver light arrays can possibly have been switched.
	Defective emitter or receiver light array	First replace the emitter light array. If the problem persists, replace the receiver light array. If necessary, replace cables.
	Defective controller	Replace controller
Indicator D1 green, blinking (Intensity)	Emitter and receiver are poorly aligned to each other	Power up the controller and correct the alignment (see the 45MLA-F Indicator Diodes section)
Incorrect values are transmitted	DIP switch setting does not correspond to the desired pitch	Correct the DIP switch setting (see the DIP Switch Settings on page 6)
	Incorrect light array pitch	Replace light array with correct pitch light array
	Light array cables longer than 10 m (32.8 ft)	Shorten the cables
	Poor or no ground connection	Improve the ground connection
	Incorrect jumper setting in controller	Correct the jumper setting (see the DIP Switch Settings on page 6)
	Defective controller	Replace controller
Object not detected	Reflections (shiny surface parallel to light beam)	Minimize shiny surface (for example, paint black)
	Defective controller	Replace controller
	Incorrect jumper setting in controller	Correct the jumper setting (see the 45MLA-CTRL-100F Controller on page 11)
	Incorrect interface wiring	Correct wiring
Spontaneous faulty switching	Foreign light courses or other optical sensors	Cover or remove foreign light sources
	Poor or no ground connection	Improve the ground connection
	Loose contact	Replace cable, controller and/or light array

Accessories

The following replacement accessories are available:

Catalog No.	Description
445L-AC8RJ♦	M12/8-pin…RJ45 connection cable ♦ 1 = 1 m (3.28 ft), 2 = 2 m (6.56 ft), 3 = 3 m (9.84 ft), 5 = 5 m (16.4 ft), and 8 = 8 m (26.25 ft)
445L-AC8PC♦	M12/8-pin…M12/8-pin connection cable ♦ 1 = 1 m (3.28 ft), 3 = 3 m (9.84 ft)
45MLA-CTRL-100F	Control unit

ATTENTION: The ground connection of the light array and controller systems can be made either at the light arrays or the controller. Do not ground both the arrays and the controller as that can create ground loops.

Technical Data

45MLA-CTRL-100F Controller

General Data	
Nominal working mode	Continuous
Net weight	360 g (12.7 oz)
Equipment dimensions	200 x 126 x 48 mm (7.87 x 4.96 x 1.89 in.)
Mounting position	No restrictions
Temperature range	Operation: 0…55 °C (32…131 °F) Storage / transport: -25…+70 °C (-13…+158 °F)
Enclosure rating according to EN 60529	Housing: IP54 Terminal strip: IP20
Housing material	ABS (FR) UL94-V0
Conductor connection: 8-pin terminal strip (plug-in)	Wire cross-section: 2.5 mm^2 (0.10 $in.^2$) max 0.08 mm^2 (0.003 $in.^2$) min Wire clamped
Quick mounting	DIN rail 35 m (114.83 ft) EN 50022 or mounting holes
Interface transmission rate	30…90 ms, dependent upon the reaction time of the Ack signal from the PLC, and the number of beams in the light array
Timing of the interface	Time Out: ca. 1 s Evaluation (internal): 0.2…0.5 ms T1: 7.3 ms (maximum), depending on the number of light array beams T2: 0.2 ms (maximum) T3: 0.11 ms (maximum) T4: 2.25 ms (maximum)
Approvals	CE Marked for all applicable directives
Interface	Four-wire serial
Weight and Packaging	
Dispatch packaging	250 x 165 x 165 mm (9.8 x 6.49 x 6.49 in.)
Dispatch weight	Net weight + 250 g (8.82 oz)
Inputs	
Nominal voltage U_N	24V DC (EN 60204-1)
with 5% residual ripple	0.85…1.15 U_N
Current consumption	100 mA, max.(Semiconductor outputs unloaded)
Internal fuse	None
Max. power consumption	2.9 W @ 100 mA (at max. operating voltage)
Semiconductor Outputs	
Terminals	Data (861), [Out1]; Ready (862), [Out2]
Type:	PNP / NPN (short circuit proof, Push pull)
Voltage	Nominal voltage UN
Current consumption	Each PNP: max.: 200 mA (24V); Each NPN: 100 mA (24V)
Logic	0V "Low" — +24V DC "High"
Semiconductor Inputs	
Terminals	Select (864), [In1]; Ack (863), [In2]
Type	PNP or NPN dependent on jumper J1 and J2 (short circuit proof)
Switching level Low	PNP: 0…7V DC; NPN: 21…24V DC
Switching level High	PNP: 18…24V DC; NPN: 0…20V DC
Current consumption	PNP: 6 mA (24V); NPN: 6 mA (0V) @24 V
Input	Minimal current 3 mA

45MLA-CTRL-100F Light Array System

General Data	
Weight	Depends on length of system and cable length
Mounting	Flanged profile with two (each side) recessed mounting holes. Made for M5 screws with pan head washers
Light array cross section	Without flange: Width: 16 mm (0.63 in.) ± 0.3 mm (0.012 in.) Depth: 20.8 mm (0.82 in.) ± 0.3 mm (0.012 in.) With flange: See Figure 6 on page 3
Housing material	Aluminum
Housing surface	Powder coated (RAL 3002 red)
Light array length (only aluminum profile)	Max. 1,400 mm (55.12 in.) (± 0.2 mm [0.008 in.]) Min. 50 mm (1.97 in.)(± 0.2 mm [0.008 in.])
Module length	50 mm (1.97 in.)
Number of beams	255 max.
Enclosure rating	IP50
Type of connector	M12/8-pin
Maximum cable length	Transmitter: 10 m (32.8 ft) Receiver: 10 m (32.8 ft)
Temperature range	Operation: - 20…+ 60 °C (-4…+140 °F) noncondensing Storage: - 20…+ 60 °C (-4…+140 °F)
Humidity	15…95% (noncondensing)
Pitch	10, 25, 37.5 mm (0.39, 0.98, 1.48 in.) or a multiple thereof via software (DIP switch)
Minimum distance from middle of the first active beam and the end of the profile	7 mm (0.27 in.) (± 0.1 mm [0.0039 in.])
Window material	Polycarbonate
Aperture geometry	37.5 mm (1.48 in.) pitch: 8 x 3.1 mm (0.31 x 0.12 in.) (h x b) 25 mm (0.98 in.) pitch: 8 x 3.1 mm (0.31 x 0.12 in.) 10 mm (0.39 in.) pitch: 8 x 2.8 mm (0.31 x 0.11 in.)
Emitter / receiver optical angle	ca. ± 2.5° 3 m (9.8 ft) and beyond
Foreign light suppression	Up to 50,000 Lux
Operating range (emitter to receiver separation)	0 mm min. 4,000 mm (157.48 in.) max.
Further data	Silicon free; Cascade system possible
Connection cable length	1, 2, 3, 5, and 8 m (3.28, 6.56, 9.8, 16.4, and 26.25 ft)
Extension cable length	1 m and 3 m (3.28 ft and 9.8 ft)

ATTENTION: These devices are intended for object recognition only and can not be used for protection of humans (access protection).

Rockwell Automation Support

Use the following resources to access support information.

Technical Support Center	Knowledgebase Articles, How-to Videos, FAQs, Chat, User Forums, and Product Notification Updates.	https://rockwellautomation.custhelp.com/
Local Technical Support Phone Numbers	Locate the phone number for your country.	http://www.rockwellautomation.com/global/support/get-support-now.page
Direct Dial Codes	Find the Direct Dial Code for your product. Use the code to route your call directly to a technical support engineer.	http://www.rockwellautomation.com/global/support/direct-dial.page
Literature Library	Installation Instructions, Manuals, Brochures, and Technical Data.	http://www.rockwellautomation.com/global/literature-library/overview.page
Product Compatibility and Download Center (PCDC)	Get help determining how products interact, check features and capabilities, and find associated firmware.	http://www.rockwellautomation.com/global/support/pcdc.page

Documentation Feedback

Your comments will help us serve your documentation needs better. If you have any suggestions on how to improve this document, complete the How Are We Doing? form at http://literature.rockwellautomation.com/idc/groups/literature/documents/du/ra-du002_-en-e.pdf.

Rockwell Automation maintains current product environmental information on its website at http://www.rockwellautomation.com/rockwellautomation/about-us/sustainability-ethics/product-environmental-compliance.page.

Rockwell Otomasyon Ticaret A.Ş., Kar Plaza İş Merkezi E Blok Kat:6 34752 İçerenköy, İstanbul, Tel: +90 (216) 5698400

www.rockwellautomation.com

Power, Control and Information Solutions Headquarters

Americas: Rockwell Automation, 1201 South Second Street, Milwaukee, WI 53204-2496 USA, Tel: (1) 414.382.2000, Fax: (1) 414.382.4444
Europe/Middle East/Africa: Rockwell Automation NV, Pegasus Park, De Kleetlaan 12a, 1831 Diegem, Belgium, Tel: (32) 2 663 0600, Fax: (32) 2 663 0640
Asia Pacific: Rockwell Automation, Level 14, Core F, Cyberport 3, 100 Cyberport Road, Hong Kong, Tel: (852) 2887 4788, Fax: (852) 2508 1846

Publication 45MLA-IN004A-EN-P - May 2017

10002965916 Ver 00