Stegmann Feedback Option Board for PowerFlex® 700S Drives

ATTENTION: To avoid an electric shock hazard, verify that the voltage on the bus capacitors has discharged completely before servicing. Check the DC bus voltage at the Power Terminal Block by measuring between the +DC and -DC terminals, between the +DC terminal and the chassis, and between the -DC terminal and the chassis. The voltage must be zero for all three measurements.

ATTENTION: HOT surfaces can cause severe burns. **Do not** touch the heatsink surface during operation of the drive. After disconnecting power allow time for cooling.

ATTENTION: This drive contains **ESD** (Electrostatic Discharge) sensitive parts and assemblies. Static control precautions are required when installing, testing, servicing or repairing this assembly. Component damage may result if ESD control procedures are not followed. If you are not familiar with static control procedures, reference A-B publication 8000-4.5.2, "Guarding Against Electrostatic Damage" or any other applicable ESD protection handbook.

ATTENTION: The sheet metal cover and mounting screws on the ASIC Board located on the power structure are energized at (-) DC bus potential high voltage. Risk of electrical shock, injury, or death exists if someone comes in contact with the assembly.

What This Kit Contains

Verify that your kit contains the items listed in the following table. If your kit does not contain the correct items, contact your Rockwell Automation sales representative.

Quantity:	Description
1	Stegmann Feedback Option circuit board
2	34 - pin "stacker" connectors **Important:** The part number of the stacker connectors in Phase I drives is 313611. The part number for the stacker connectors used in Phase II drives is 320669-Q04.
3	Screws with captive lock washers
3	Stand-offs (for Phase i drives only)

Tools That You Need

- Phillips® screwdriver for M3 screws
- POZIDRIV® screwdriver for M4 screws (for high power drives only)
- Nut driver or wrench for M3 hex nut
- Nut driver or wrench for M5 hex nut

What You Need to Do

To remove the Stegmann Feedback option board from the PowerFlex 700S drive:

❒Step 1: Remove power from drive

❒Step 2: Remove cover(s) from drive

❒Step 3: Remove control assembly from drive

❒Step 4: Remove feedback option board

To install the new Stegmann Feedback option board on the PowerFlex 700S drive:

❒Step 5: Install feedback option board

❒Step 6: Install Phase I control assembly

❒Step 7: Wire Stegmann feedback option board to encoder

❒Step 8: Install Phase II control assembly

❒Step 9: Install covers on drive

❒Step 10: Document change

To return a replaced Stegmann Feedback option board to Rockwell Automation, use the packing material from the new Stegmann Feedback option board.

Step 1: Remove Power from the Drive

ATTENTION: To avoid an electric shock hazard, verify that the voltage on the bus capacitors has discharged before performing any work on the drive. Measure the DC bus voltage at the DC+ & DC- terminals of the Power Terminal Block. The voltage must be zero.

Remove power before making or breaking cable connections. When you remove or insert a cable connector with power applied, an electrical arc may occur. An electrical arc can cause personal injury or property damage by:

- sending an erroneous signal to your system's field devices, causing unintended machine motion
- causing an explosion in a hazardous environment

Electrical arcing causes excessive wear to contacts on both the module and its mating connector. Worn contacts may create electrical resistance.

1. Turn off and lock out input power. Wait five minutes.
2. Verify that there is no voltage at the drive's input power terminals.
3. Measure the DC bus voltage at the DC+ & DC- terminals on the Power Terminal Block. The voltage must be zero.

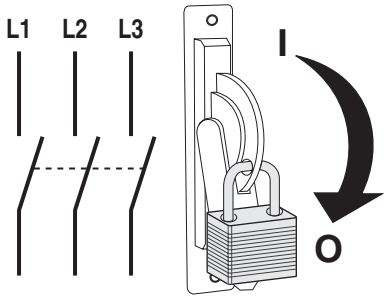

Step 2: Remove the Cover(s) from the Drive

The steps for removing the covers of the drive are different depending on the size of the drive. Refer to the appropriate instructions:

- Refer to Frame 1 - 6 Size Drives with Phase I Control below.
- Refer to Frame 1 - 6 Size Drives with Phase II Control on page 5
- Refer to Frame 9 Size Drives on page 5
- Refer to Frame 10 - 14 Size Drives on page 5

Frame 1 - 6 Size Drives with Phase I Control

Task	Description
Ⓐ	Loosen the captive screw.
Ⓑ	Push down on the front cover.
Ⓒ	Pull the front cover away from the assembly.
Ⓓ	Pull the side cover forward.
Ⓔ	Lift the side cover off of the control assembly.

Continue with Step 3: Remove the Control Assembly from the Drive on page 6.

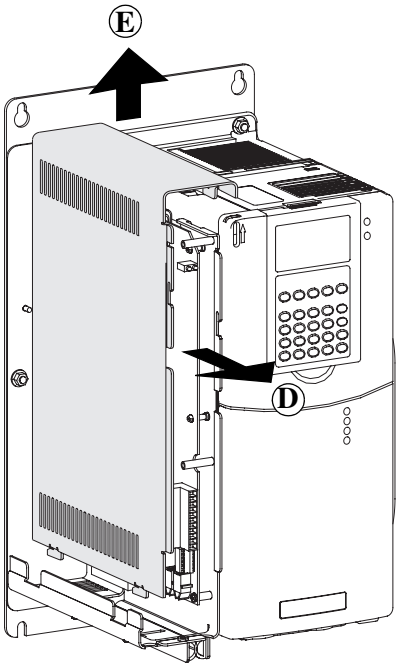

Frame 1 - 6 Size Drives with Phase II Control

Frame	Action
1 - 4	Locate the slot in the upper left corner (as shown below). Slide the locking tab up and swing the cover open. Special hinges allow the cover to move away from drive and lay on top of an adjacent drive (if present).
5	Slide the locking tab up, loosen the right-hand cover screw and remove the cover.
6	Loosen the two screws at bottom of the drive cover. Carefully slide the bottom cover down and out. Loosen the two screws at top of cover and remove the cover.

Continue with Step 3: Remove the Control Assembly from the Drive on page 6.

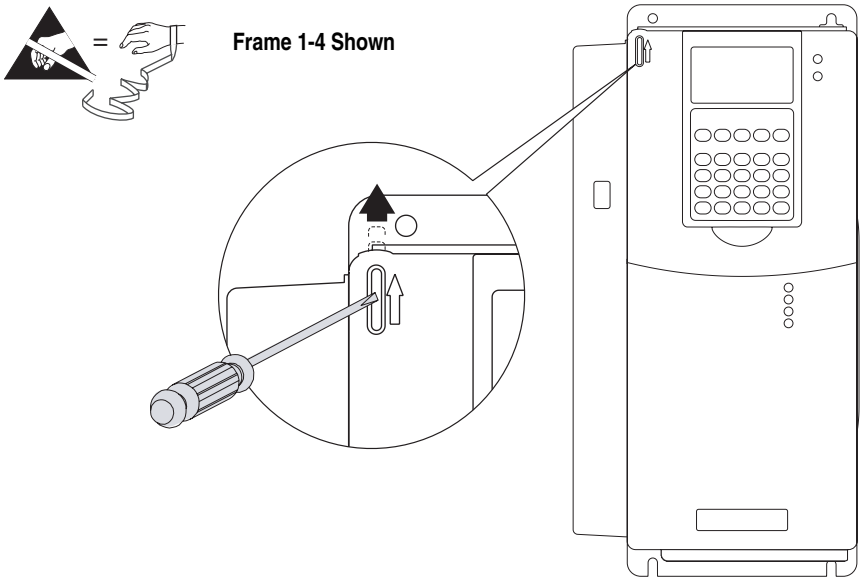

Frame 9 Size Drives

Task	Action
Ⓐ	Remove the eight POZIDRIV screws that secure the power (top) cover to the drive.
Ⓑ	Remove the power (top) cover.

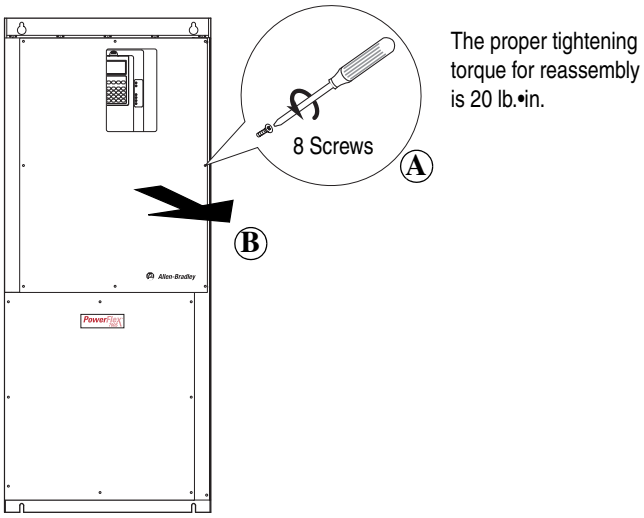

The proper tightening torque for reassembly is 20 lb.•in.

Frame 10 - 14 Size Drives

Open the door of the drive enclosure containing the control frame.

Step 3: Remove the Control Assembly from the Drive

The steps to remove the control assembly from the drive are different for drives with Phase I control versus drives with Phase II control. Refer to the appropriate instructions:

- Refer to Drives with Phase I Control below.
- Refer to Drives with Phase II Control on page 7.

Drives with Phase I Control

This step is necessary only when another drive or panel component blocks access to the control assembly on frame 1 - 6 drives with Phase I control. Avoid removing the control assembly if possible. If you do not need to remove the control assembly from the drive, continue with Step 4: Remove the Feedback Option Board on page 9.

Important: Before removing connections and wires, mark the connections and wires to avoid incorrect wiring during assembly.

Task	Description
Ⓐ	Unplug the I/O and SynchLink cables from the main control board, unplug feedback wiring from the MDI Option board (if present), and unplug the communication cables from DriveLogix controller (if present).
Ⓑ	Unplug the ribbon cable.
Ⓒ	Remove the three M5 nuts that secure the control assembly to the drive chassis.
Ⓓ	Remove the control assembly from the drive.

Continue with Step 4: Remove the Feedback Option Board on page 9.

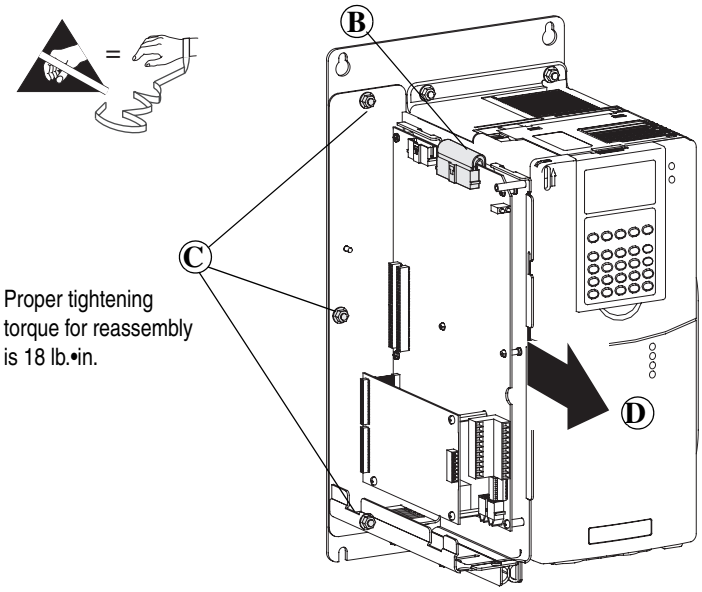

Drives with Phase II Control

It is necessary to remove the Phase II control assembly from the drive before removing the covers.

ATTENTION: Hazard of permanent eye damage exists when using optical transmission equipment. This product emits intense light and invisible radiation. Do not look into fiber-optic ports or fiber-optic cable connectors.

Important: Before removing connections and wires, mark the connections and wires to avoid incorrect wiring during assembly.

Frame 1-6 Size Drives

Task	Action
Ⓐ	Unplug any fiber optic ControlNet and SynchLink cables and I/O cables from the control assembly.
Ⓑ	Disconnect the communications cables at the ends that connect to the main control board.
Ⓒ	Loosen the screws on the face of the cassette.
Ⓓ	Remove the cassette from the drive.

Continue with Remove the Cassette Covers on Drives with Phase II Control (All Drive Sizes) on page 9

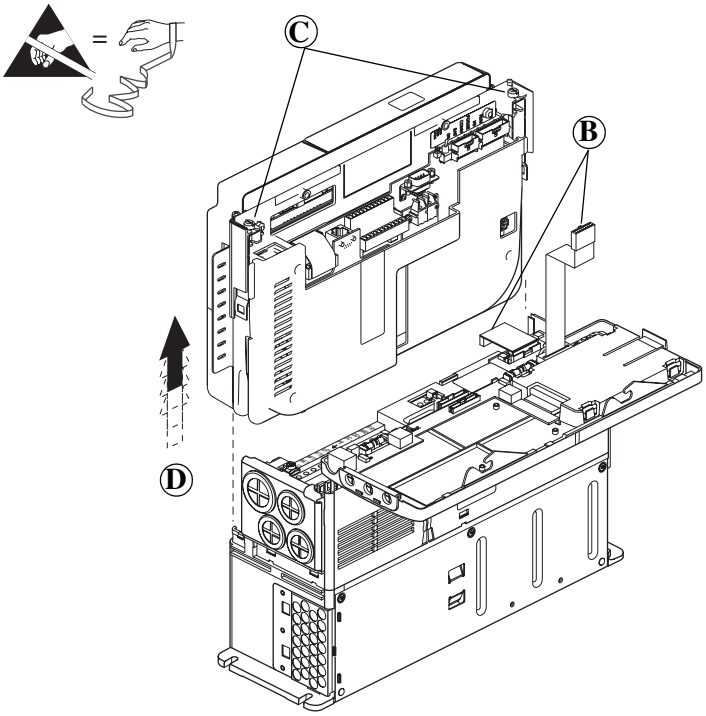

Frame 9-14 Size Drives

Task	Description
Ⓐ	Unplug any fiber optic ControlNet and SynchLink cables from the control assembly.
Ⓑ	Unplug any remaining I/O and communications cables from the control assembly and set them aside.
Ⓒ	Loosen the captive screw.
Ⓓ	Swing the control assembly away from the control frame.
Ⓔ	Loosen the screws on the face of the cassette.
Ⓕ	Remove the cassette from the drive.

Continue with Remove the Cassette Covers on Drives with Phase II Control (All Drive Sizes) on page 9

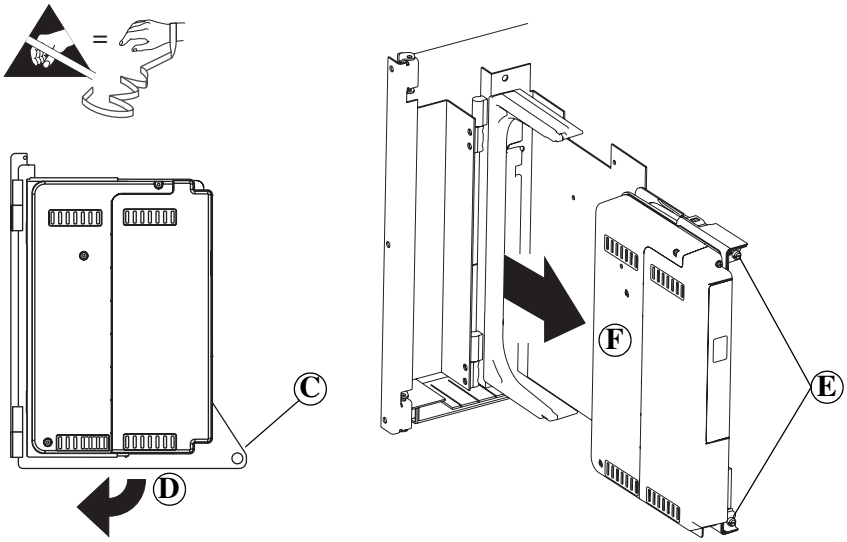

Remove the Cassette Covers on Drives with Phase II Control (All Drive Sizes)

Task	Description
Ⓐ	Loosen the screws on the face of the front cover and remove the cover.
Ⓑ	Loosen the screws on the side of the rear cover and remove the cover.

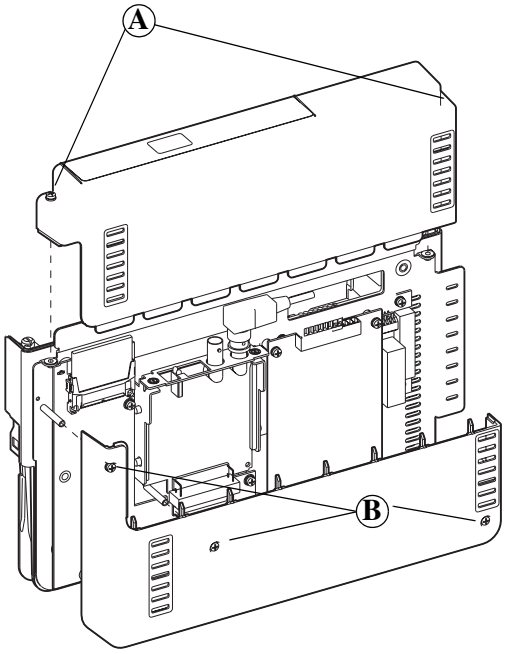

Proper tightening torque for reassembly is 6 lb.•in.

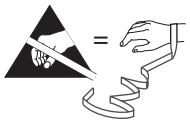

Step 4: Remove the Feedback Option Board

Task	Description
Ⓐ	Remove the screws that secure the feedback option board to the control assembly.
Ⓑ	Remove the feedback option board and through-board pin connectors from the main control board.
Ⓒ	Remove the standoffs from the main control board (drives with Phase I control only).

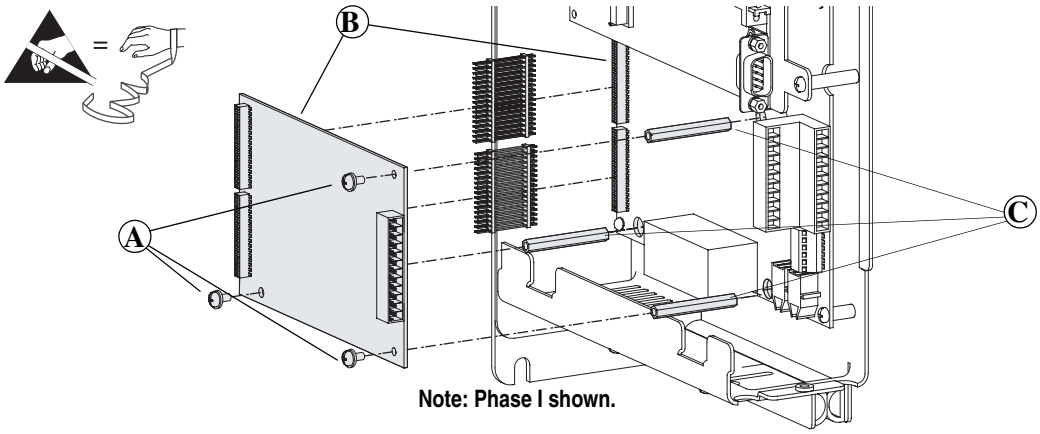

Note: Phase I shown.

TIP: Use packing material from new Stegmann Feedback option board to return the replaced Stegmann Feedback option board.

Step 5: Install the Feedback Option Board

The steps to install the Feedback option board are different for drives with Phase I control versus drives with Phase II control. Refer to the appropriate instructions:

- Refer to Drives with Phase I Control below.
- Refer to Drives with Phase II Control on page 11.

Drives with Phase I Control

Important: Do not use a screwdriver to pry the P1 terminal plug from the circuit board. This may damage the plug.

Task	Description
Ⓐ	Remove the P1 terminal block from the Feedback option board. (It is much easier to remove before the board is installed.)
Ⓑ	Install and tighten the stand-offs (min/max 7 in.•lb. / 10 in.•lb.).
Ⓒ	Insert the short pins of through-board pin connectors (part number 313611) into the mating connectors on the main control board. **Important:** The end with short pins must plug into the main control board.
Ⓓ	Plug the mating connectors of the Feedback option board onto the long pins of through-board pin connectors. **Important:** The end with longer pins must plug into the Feedback option board.
Ⓔ	Secure board to stand-offs using the screws with the captive lock washers. Tighten the screws using a Phillips screwdriver (min/max 6 in.•lb. / 8 in.•lb.). **Note**: If the option board is not fully seated against the stand-off and is warped, either the wrong stacker connector is used or the stacker connector is incorrectly installed.

Continue with Step 6: Install the Phase I Control Assembly.

Important: For Phase I drives, use the stacker connectors with part number 313611.

Important: The end with longer pins must plug into the Stegmann Feedback option board.

Important: The end with shorter pins must plug into the main control board.

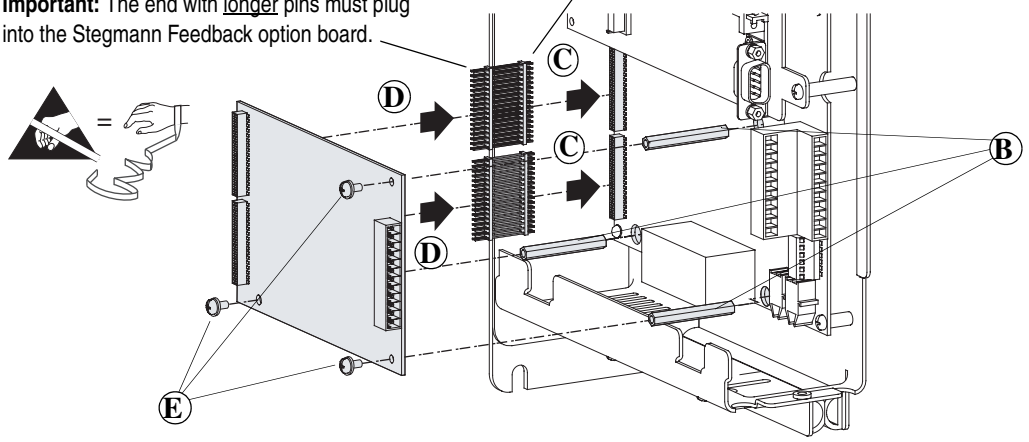

Drives with Phase II Control

Important: Do not use a screwdriver to pry the P1 terminal plug from the circuit board. This may damage the plug.

Task	Description
Ⓐ	Remove the P1 terminal block from the Stegmann Feedback option board. (It is much easier to remove before the board is installed.)
Ⓑ	Insert the short pins of the through-board pin connectors (part number 320669-Q04) into the mating connectors on the main control board. **Important:** The end with short pins must plug into the main control board.
Ⓒ	Plug the mating connectors of the Feedback option board onto the long pins of through-board pin connectors. **Important:** The end with longer pins must plug into the Feedback option board.
Ⓓ	Secure the board to the stand-offs using the screws with captive lock washers (supplied with this kit). Tighten the screws with a Phillips® screwdriver (min/max 6 in.-lb. / 8 in.-lb.). **Note**: If the option board is not fully seated against the stand-off and is warped, either the wrong stacker connector is used or the stacker connector is incorrectly installed.

Continue with Step 7: Wire the Stegmann Feedback Option Board to an Encoder on page 12.

Important: For Phase II drives, use the stacker connectors with part number 320669-Q041.

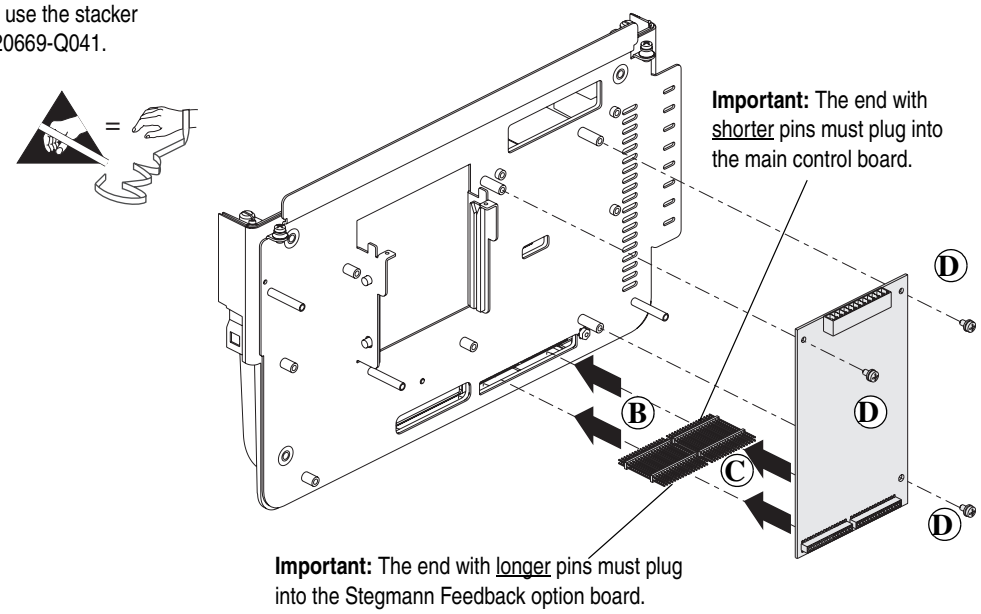

Step 6: Install the Phase I Control Assembly

The procedure for installing the control assembly on drives with Phase I control is the reverse of removal. Refer to Step 3: Remove the Control Assembly from the Drive on page 6.

When you have completed installing the control assembly on a drive with Phase I control, continue with Step 7: Wire the Stegmann Feedback Option Board to an Encoder on page 12.

Step 7: Wire the Stegmann Feedback Option Board to an Encoder

Terminal block P1 contains connection points for a Stegmann Hiperface® encoder. This terminal block resides on the Hi-Resolution Encoder Feedback Option board.

Hiperface® is a registered trademark of Stegmann Inc.

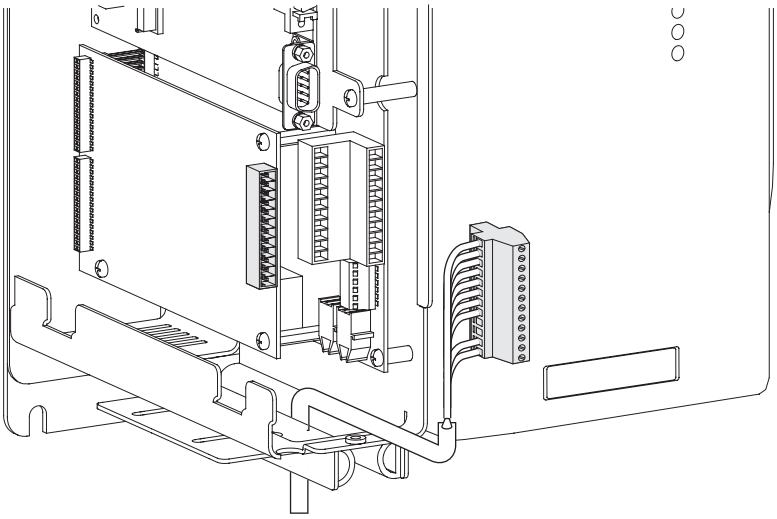

▶ **TIP:** Remember to route wires through the sliding access panel at the bottom of the Control Assembly.

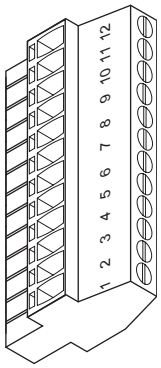

Terminal	Signal	Description
12	POWER COMMON	Power supply for encoder interface.
11	POWER	
10	REFSIN	Negative Sine signal.
9	+SIN	Positive Sine signal.
8	REFCOS	Negative Cosine signal.
7	+COS	Positive Cosine signal.
6	SHIELD	Connection point for encoder cable shield.
5	SHIELD	
4	N/C	Not connected.
3	N/C	
2	DATA+ (RS 485)	Positive DH485 terminal.
1	DATA- (RS 485)	Negative DH485 terminal.

Table A Recommended Cables

If you are using this motor and feedback device:	Use this cable:	See this wiring diagram:
Allen-Bradley 1326AB-BXXXX-21ML, and -21MKXL motors with embedded Stegmann rotary encoder	Allen-Bradley 1326-CECU-XXL-XXX	Figure 1 on page -14
Allen-Bradley 1326AB-BXXXX-M2L, -M2KXL, -S2L, and -S2KXL motors with embedded Stegmann rotary encoder	Allen-Bradley 2090-CDNFDMP-SXX	Figure 2 on page -14
Allen-Bradley MPL-A5xx and all MPL-Bxxx motors with embedded Stegmann rotary encoder	Allen-Bradley 2090-CDNFDMP-SXX	Figure 2 on page -14
Allen-Bradley 1326AB-BXXXX-M2L, -M2KXL, -S2L, and -S2KXL motors with embedded Stegmann rotary encoder	Allen-Bradley 2090-XXNFMP-SXX	Figure 3 on page -14
Allen-Bradley MPL-A5xx and all MPL-Bxxx motors with embedded Stegmann rotary encoder	Allen-Bradley 2090-XXNFMP-SXX	Figure 3 on page -14
Allen-Bradley MPL-A3xx - MPL-A45xx and all MPG series motors with embedded Stegmann rotary encoder	Allen-Bradley 2090-XXNFMP-SXX	Figure 4 on page -15
Allen-Bradley MPL-A3xx - MPL-A45xx and all MPG series motors with embedded Stegmann rotary encoder	Allen-Bradley 2090-UXNFDMP-SXX	Figure 5 on page -15
HPK-Series motors with embedded Stegmann rotary encoder	Allen-Bradley 2090-XXNFMF-SXX	Figure 6 on page -15
Any other motor with external Stegmann SHS-170 rotary encoder	Stegmann shielded twisted-pair cable with 12-pin DIN style connector	Figure 7 on page -16
Any other motor with external Stegmann SCS-60, SCS-70, SCM-60 or SCM-70, SRS-50, SRS-60, SRM-60, SRM-60, SRS-25 or SRM-25 rotary encoder	Stegmann shielded twisted-pair cable with 10-pin MS style connector	Figure 8 on page -16
Any other motor with external Stegmann SCS-Kit 101 or SCK-Kit 101 rotary encoder	Stegmann shielded twisted-pair cable with 8-pin Berg style connector	Figure 9 on page -16
Any other motor with external Stegmann SRS660 rotary encoder	Is available only with pre-attached Stegmann shielded twisted-pair cable of various lengths	Figure 10 on page -17

Connection Examples

Figure 1 1326AB-BXXXX-21ML, and -21MKXL motors with a 1326-CECU-XXL-XXX cable

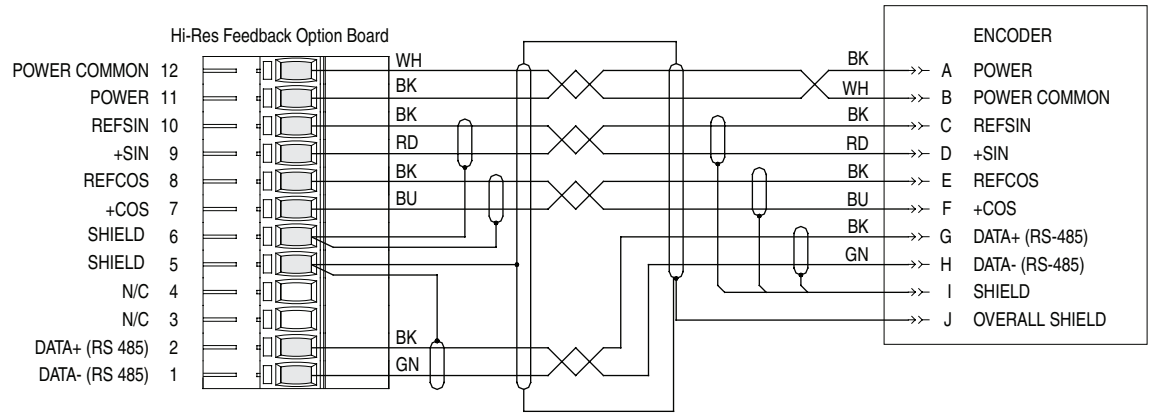

Figure 2 MPL-A5xx and all MPL-Bxxx motors or 1326AB-BXXXX-M2L, -M2KXL, -S2L, and -S2KXL motors with 2090-CDNFDMP-SXX cable

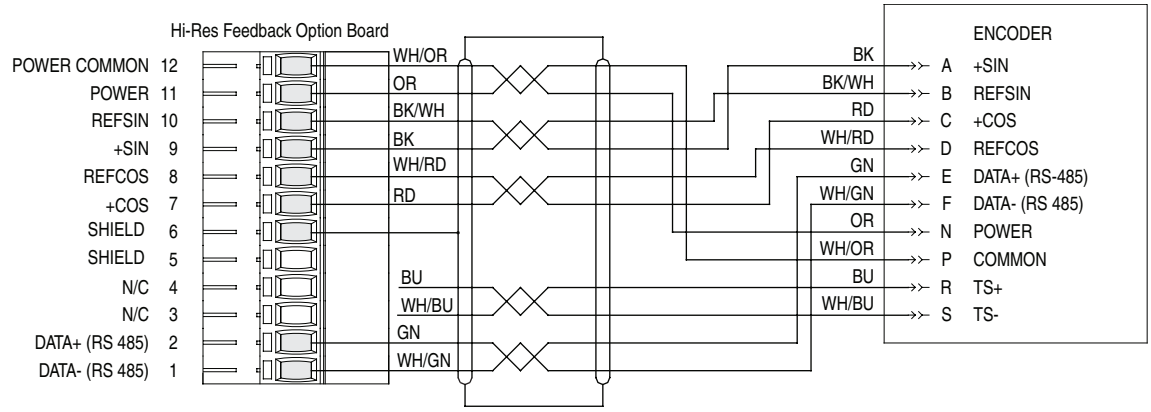

Figure 3 MPL-A5xx and all MPL-Bxxx Motor or 1326AB-BXXXX-M2L, -M2KXL, -S2L, and -S2KXL motor with 2090-XXNFMP-SXX cable

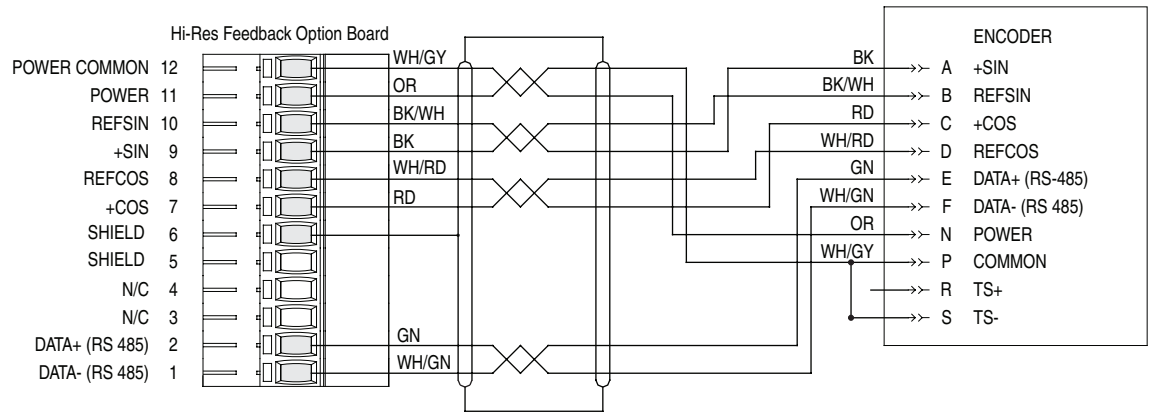

Note: Thermal Switch cannot be accessed using 2090-XXNFMP-SXX cable.

Connection Examples

Figure 4 MPL-A3xx - MPL-A45xx and all MPG series motors with 2090-XXNFMP-SXX cable

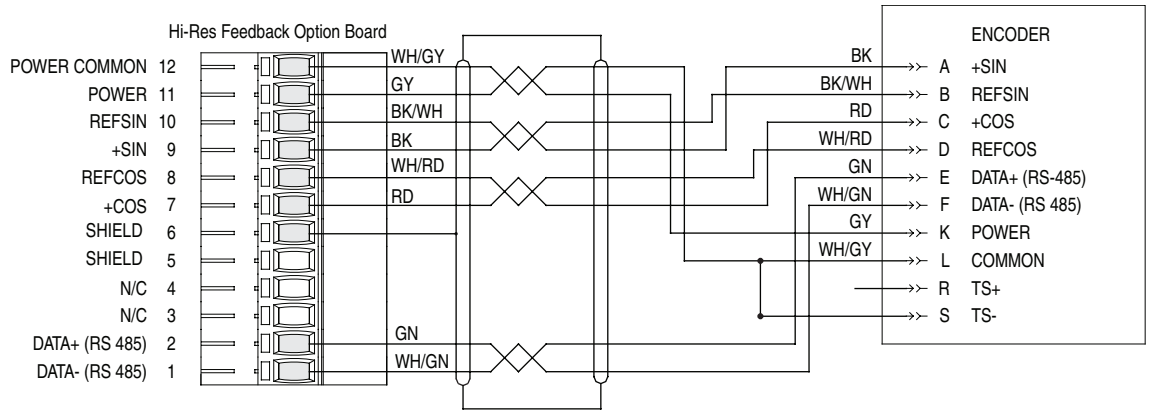

Note: Thermal Switch cannot be accessed using 2090-XXNFMP-SXX cable.

Figure 5 MPL-A3xx - MPL-A45xx and all MPG series motors with 2090-UXNFDMP-SXX cable

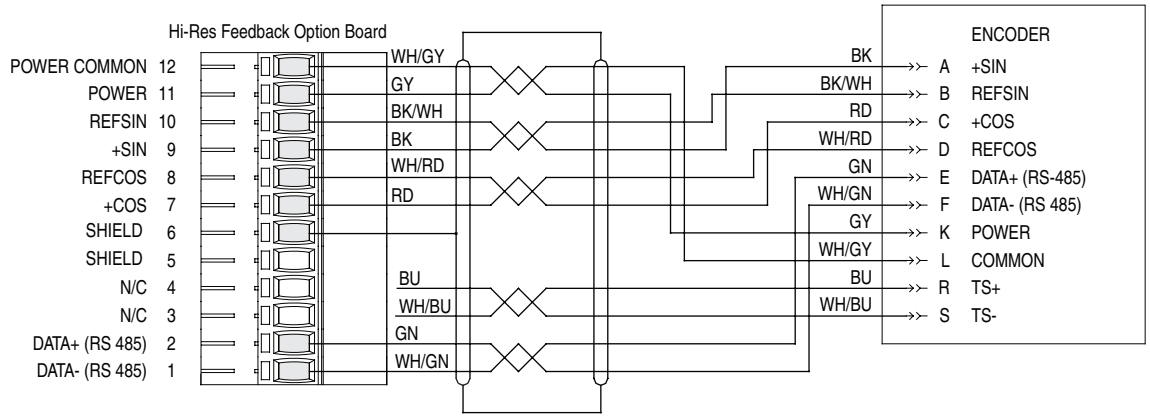

Figure 6 HPK-Series motors with 2090-XXNFMF-SXX cable

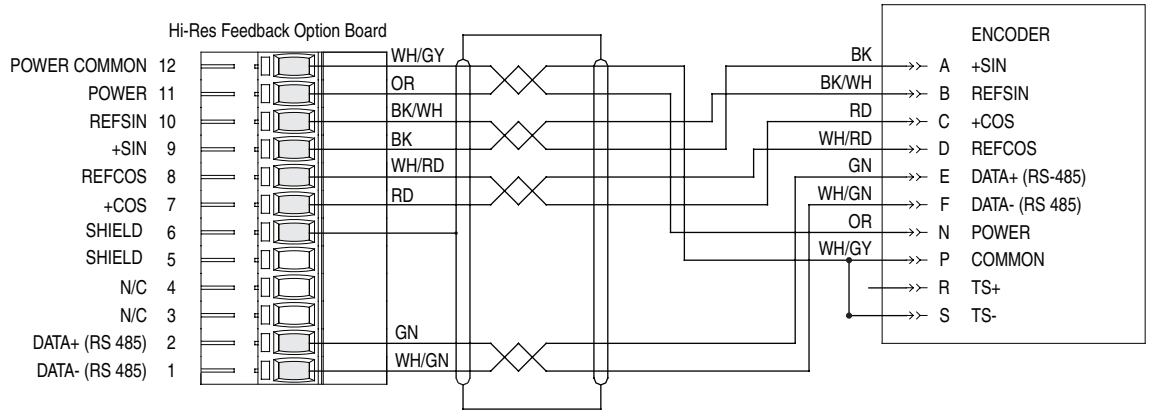

Note: Thermal Switch cannot be accessed using 2090-XXNFMP-SXX cable.

Connection Examples

Figure 7 Stegmann shielded twisted-pair cable with 12-pin DIN style connector

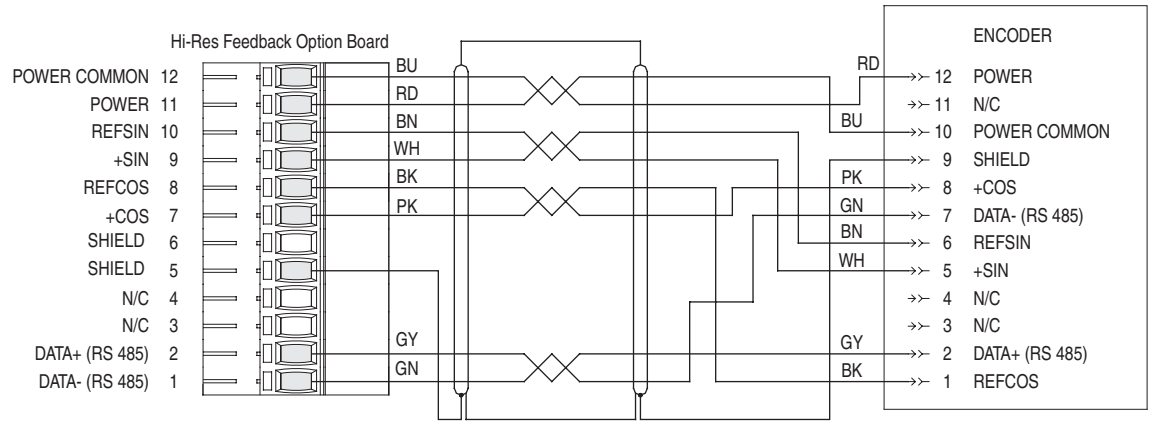

Figure 8 Stegmann shielded twisted-pair cable with 10-pin MS style connector

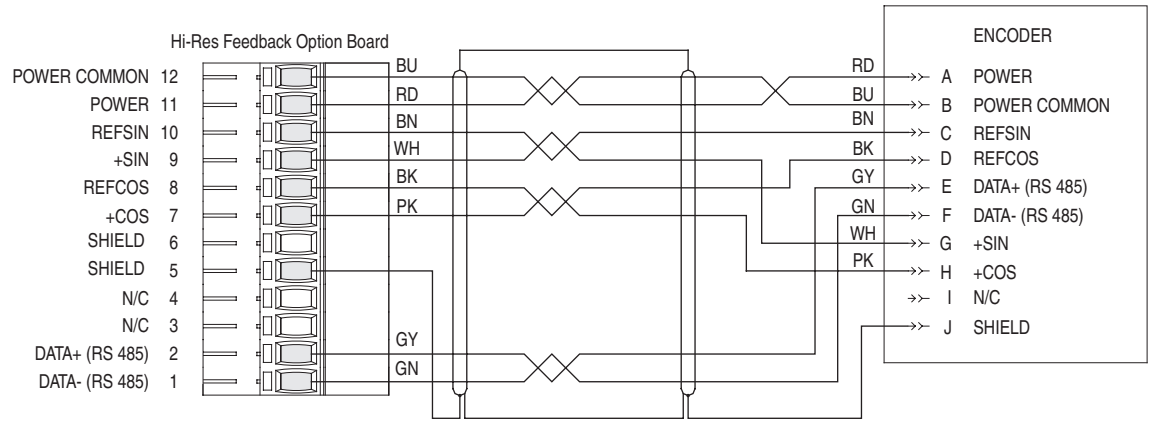

Figure 9 Stegmann shielded twisted-pair cable with 8-pin Berg style connector

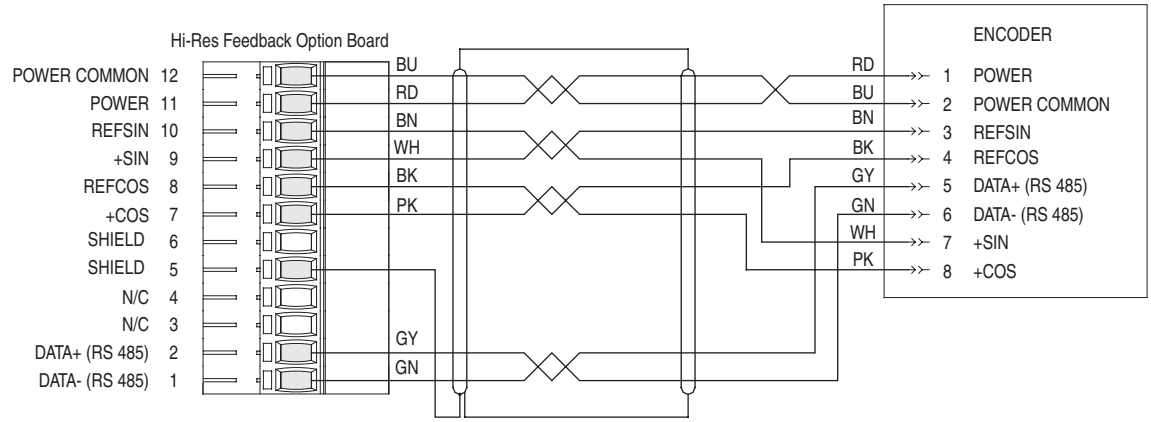

Connection Examples

Figure 10 Pre-attached Stegmann shielded twisted-pair cable

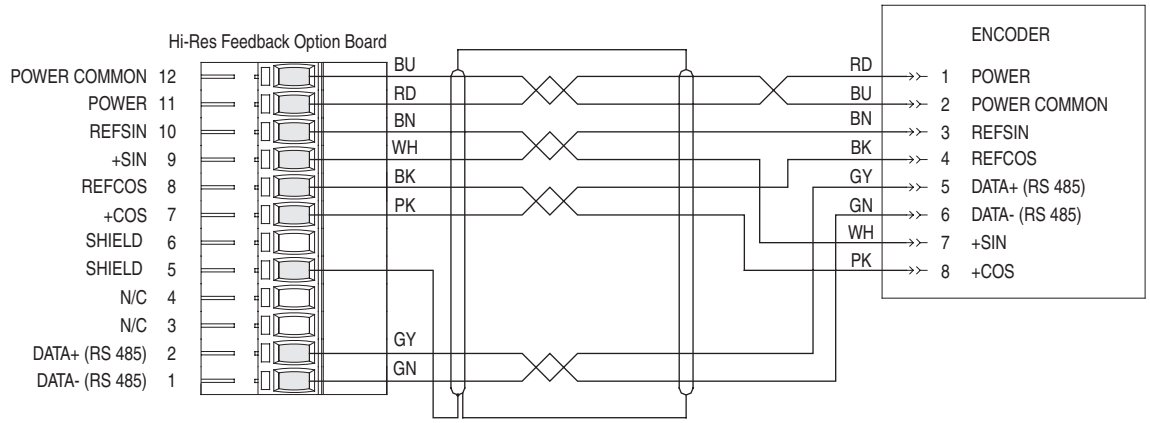

Step 8: Install the Phase II Control Assembly

The procedure for installing the Phase II control assembly is the reverse of removal. Refer to Step 3: Remove the Control Assembly from the Drive on page 6.

Step 9: Install the Covers on the Drive

The procedure for installing the covers on all drives is the reverse of removal. Refer to Step 2: Remove the Cover(s) from the Drive on page 4.

Step 10: Document the Change

Document the option board installation on the Field Installed Options label. Use the blank line if you are installing the Stegmann Feedback option in a drive that was manufactured without it.

Frame 1 - 6 Size Drives

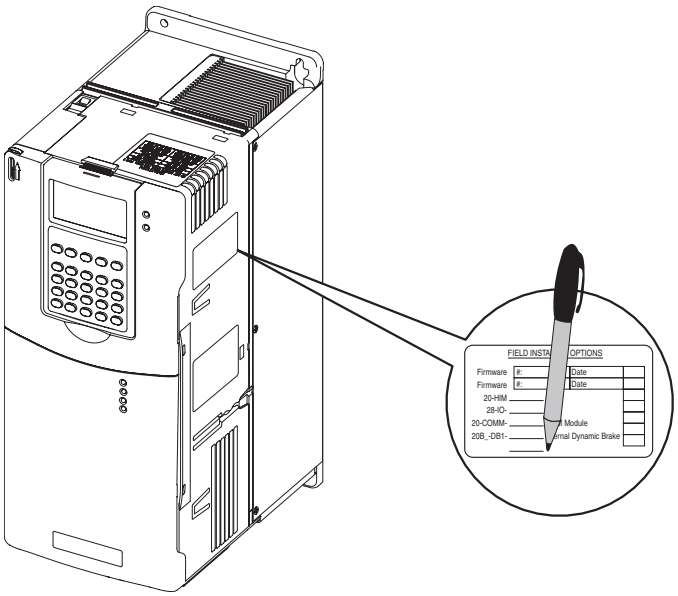

Frame 9 - 13 Size Drives

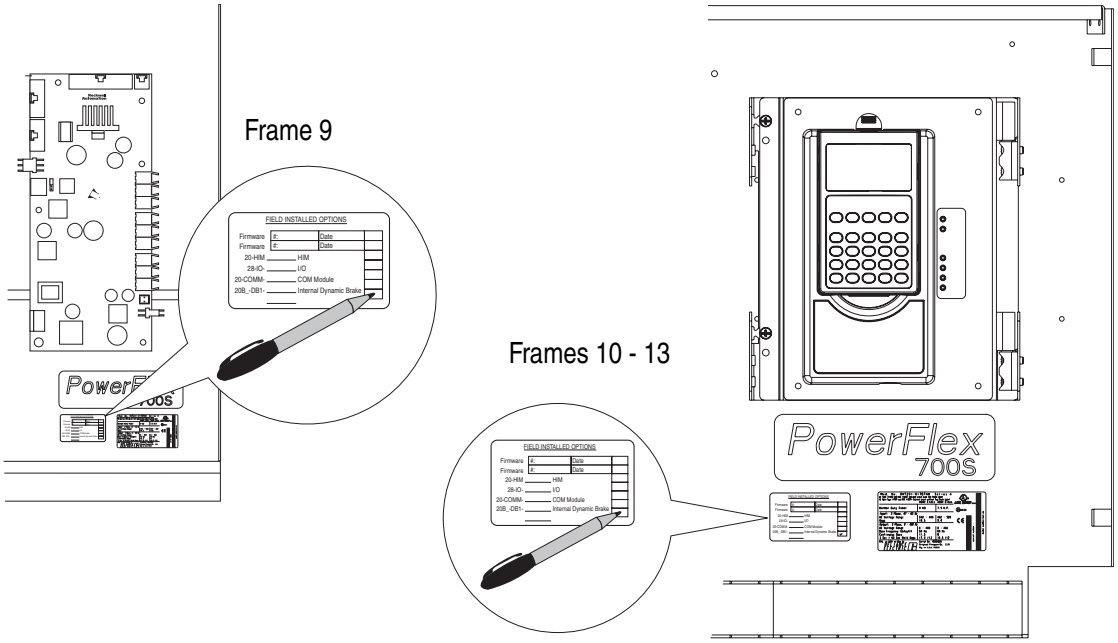

Specifications

Stegmann Feedback Option Board Specifications

Consideration	Description
Encoder Voltage Supply	11.5V dc @ 130 mA
Stegmann Feedback	Sine/Cosine 1V P-P Offset 2.5
Maximum Cable Length	90m (295 ft)
Maximum Frequency (Encoder Speed)	12.5 µs/cycle (4687.5 RPM for encoders with 1024 sine cycles per revolution) (9375 RPM for encoders with 512 sine cycles per revolution)
RS-485 Interface	The Stegmann Feedback Option board obtains the following information via the Hiperface RS-485 interface shortly after power-up: • Address • Command Number • Mode • Number of turns • Number of Sine/Cos cycles • Checksum
Customer-I/O plug (P1)	Allen-Bradley PN: S94262912 Weidmuller PN: BL3.50/90/12BK

Supported Encoders

Table B below specifies which encoders are supported by the 700S Hi-Resolution Stegmann Encoder Feedback Option module.

Important: Please note that encoders must be ordered as “Single Ended”. This will ensure that the RS-485 channel has the proper termination network installed at the factory.

Table B Supported Stegmann Encoders

Model	Resolution	Comment
SINCOS® SCS-60, SCS-70, SCM-60, and SCM-70	512 sine cycles per revolution.	SCM-60 and SCM-70 have built-in mechanical turns counter.
SINCOS® SCS-KIT-101 and SCM-KIT-101	1024 sine cycles per revolution.	SCM-60 and SCM-70 have built-in mechanical turns counter.
SINCOS® SRS-50, SRS-60, SRM-50, and SRM-60	1024 sine cycles per revolution.	SRM-50 and SRM-60 have built-in mechanical turns counter.
SINCOS® SRS/M 25	1024 sine cycles per revolution	SRS25 and SRM25 have built-in mechanical turns counter. IP65 Protection Class. Size 25 square flange mounting.
SINCOS® SRS660	1024 sine cycles per revolution	Hollow-shaft up to 14 mm diameter
SINCOS® SHS-170	512 sine cycles per revolution.	While the software supports this encoder, the SHS-170 draws excessive current and should only be used with an external power supply.

SINCOS®, SINCODER® and LINCODER® are registered trademarks of Stegmann Inc.

www.rockwellautomation.com

Power, Control and Information Solutions Headquarters

Americas: Rockwell Automation, 1201 South Second Street, Milwaukee, WI 53204 USA, Tel: (1) 414.382.2000, Fax: (1) 414.382.4444

Europe/Middle East/Africa: Rockwell Automation, Vorstlaan/Boulevard du Souverain 36, 1170 Brussels, Belgium, Tel: (32) 2 663 0600, Fax: (32) 2 663 0640

Asia Pacific: Rockwell Automation, Level 14, Core F, Cyberport 3, 100 Cyberport Road, Hong Kong, Tel: (852) 2887 4788, Fax: (852) 2508 1846

Publication 20D-IN001G-EN-P - May 2008

Superseeds 20D-IN001F-EN-P April 2006

P/N 317680-P05