Application Technique

Allen-Bradley

Application Guidelines for Maintaining Arc Resistant Rating when Close Coupled with ArcShield MVMCC

Publication 1500-AT003A-EN-P

Introduction

This document outlines the requirements and responsibilities regarding close coupling arc resistant equipment from 3rd party suppliers(1) with Rockwell Automation ArcShield™ Medium Voltage Motor Control Centers (MVMCCs).

The Rockwell Automation ArcShield MVMCC may be close coupled to arc resistant equipment from other suppliers while maintaining the original arc resistant rating with the requirement that any such connection must adhere to the guidelines provided in this publication.

Close coupled means the main power bus is directly connected between the ArcShield MVMCC and the 3rd party equipment, and that this buswork will share a common air space. Close coupling may also include the coupling of the arc gas release system (plenums) after a full engineering evaluation.

(1) Typically switchgear or loadbreak switches.

Overview

1. The ArcShield MVMCC cannot be modified in any way without written permission from Rockwell Automation.
2. The 3rd party equipment must have a minimum type 2 accessibility rating when tested at a voltage of 7200 and a maximum current of 40 kA or 50 kA[(1)] for 500 ms, per IEEE C37.20.7. A type 2B accessibility rating is preferred.
3. If the 3rd party equipment has an arc resistant rating higher than the ArcShield products, the 3rd party must relabel their product for the lower rating of 40 kA or 50 kA[(1)] for 500 ms.
4. The overall combined system arc resistant rating, per IEEE C37.20.7, will be Type 2 or Type 2B accessibility at a maximum 7200V at either 40 kA or 50 kA[(1)] for 500 ms.
5. The 3rd party supplier is responsible for maintaining the arc resistant rating of their equipment, including any transition section(s) and the sealing of the physical connection between their transition section to the ArcShield MVMCC.
6. The ArcShield MVMCC must be installed per the instructions contained within the applicable Rockwell Automation Arc Resistant MVMCC user manual.

Minimum Requirements

Main Power Bus Bar Connection

Use the following guidelines if close coupling ArcShield MVMCC arc resistant equipment to a circuit breaker, load break switch, or other arc resistant cabinet.

1. The 3rd party supplier of the arc resistant cabinets is responsible for the construction and supply of a suitable arc resistant certified transition section permitting a direct close coupled bus connection to the ArcShield MVMCC.
2. The 3rd party supplier must provide the suitable bus links to the ArcShield products.
3. Mount the ArcShield MVMCC equipment flush with the front of the 3rd party supplier equipment to ensure adequate clearance. This is especially important on the left side of any ArcShield line up.
4. The 3rd party arc resistant transition enclosure or switchgear section must include a bus cutout at the same location as the cutout on the ArcShield structure (see Figure 11 and Figure 12).
5. The internal bus barriers or supports must not block air movement between the ArcShield structure and the 3rd party supplier equipment. The common power bus will share a common air space for the entire length of the lineup.

(1) Not available on all configurations.

6. The power bus cutout on the 3rd party cabinets must contain the same bolt pattern as the ArcShield MVMCC structure cutout. No perimeter holes shall be left open (see Figure 3 and Figure 4).
7. Secure the adjacent bus cutouts for an ArcShield MVMCC and a 3rd party supplier using the hardware listed in Table 1.

Table 1 - Hardware Description and Quantity

Description	Quantity
M-922, 0.25 in. 20 x 0.75 in. Bolt	26
M-6, 0.24 in. Lock Washer	26
M-7, 0.25 in. Hex Nut	26
M-2230, 0.25 in. Flat Washer	52

Figure 1 - ArcShield Power Bus Opening and Securing Locations

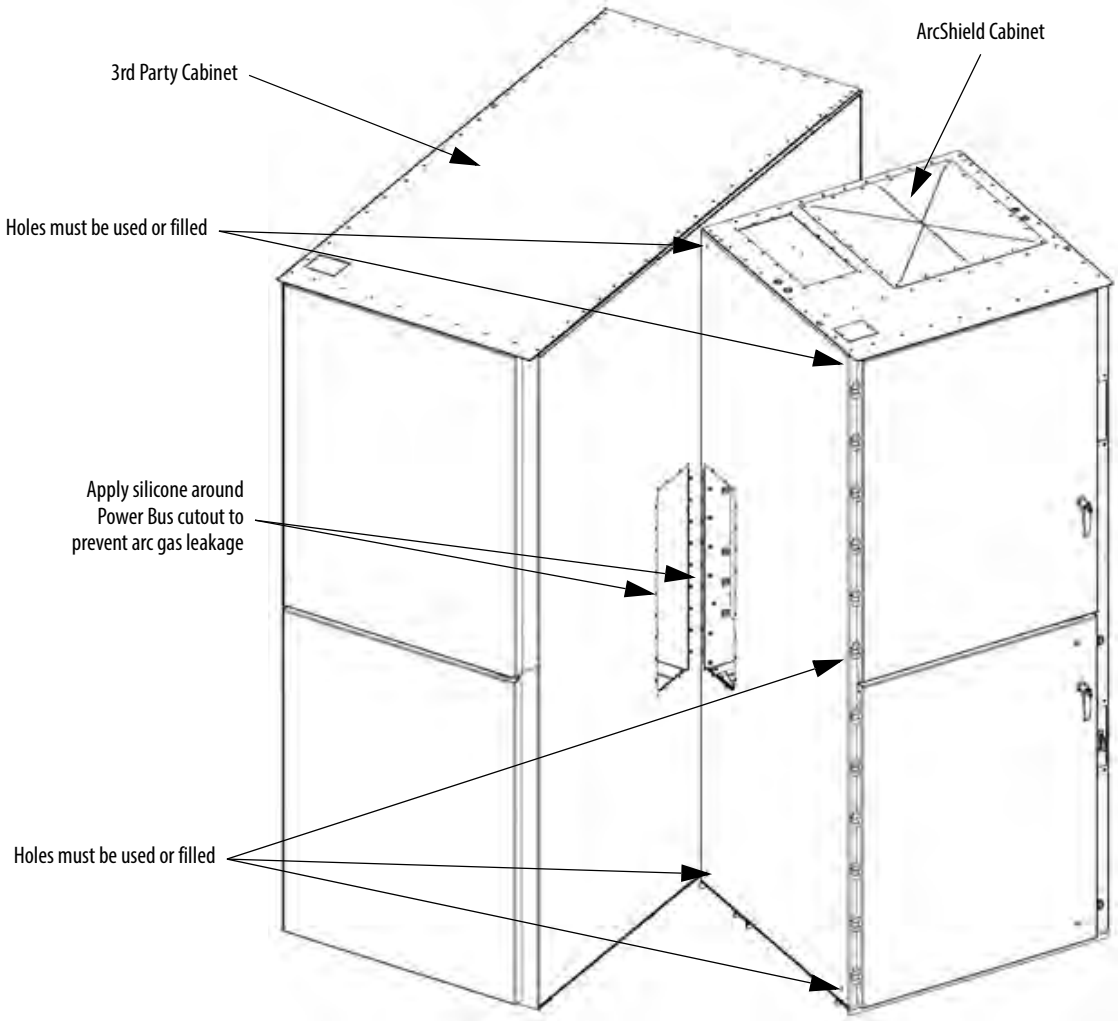

Figure 2 - ArcShield Bus Opening Location

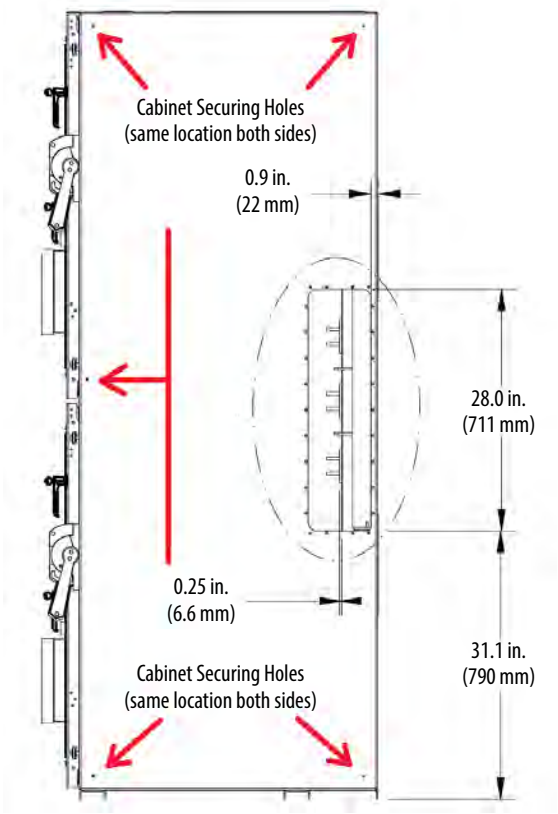

Figure 3 - Bus Opening Securing Holes Location

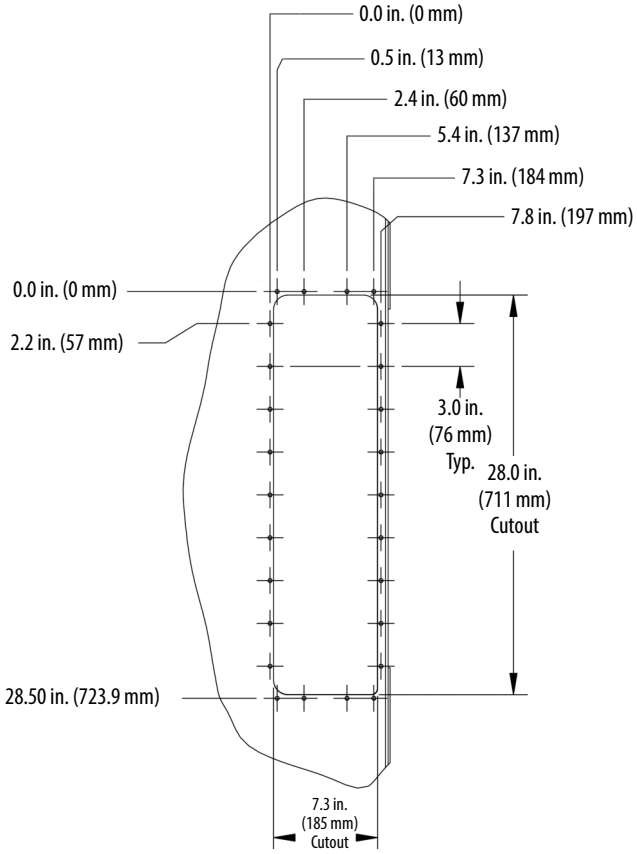

Figure 4 - AcrShield Bus General Location

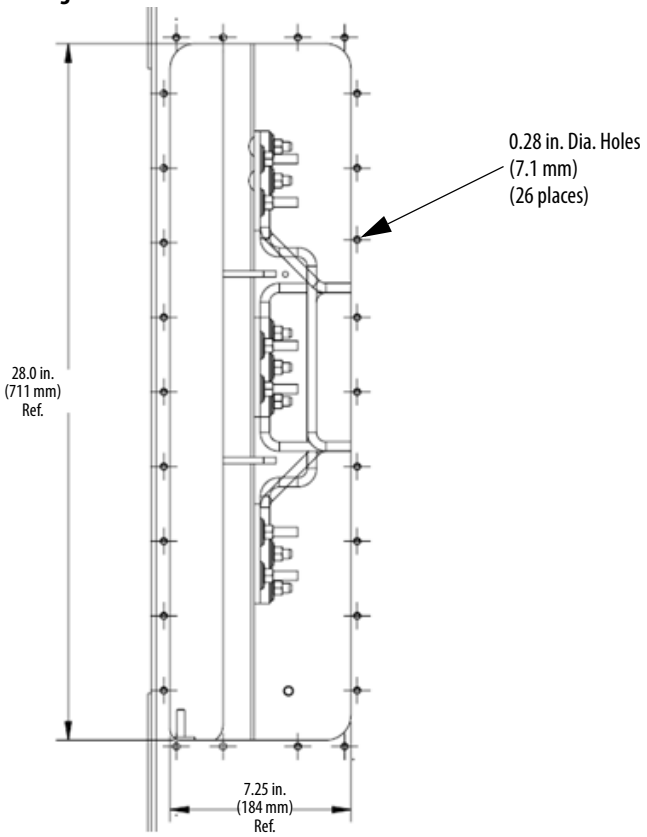

8. Place a 0.125 in. (3 mm) continuous bead of silicone sealant (Type 108 RTC 82 or similar) around the outer perimeter of one of the adjoining sections and around the power bus cutout.
9. Secure the 3rd party cabinet to the side of the adjacent ArcShield MVMCC enclosure at five additional locations (Figure 2). The 3rd party cabinet must have aligning holes to the existing holes on the ArcShield MVMCC. (Figure 5).

IMPORTANT	Note the location requirements for the pilot and clearance holes. The pilot holes can be drilled out to permit the use of 0.25 in. bolt and nuts in place of the 0.25 in.- 20 X 0.5 in. self-tapping screws. It is not always possible to use a bolt and nut combination in all locations.

10. If there are structural retention holes in the ArcShield MVMCC side sheet that cannot be used due to interference in the adjacent 3rd party cabinet, cap these holes and secure using a bead of silicone from the inside of the ArcShield MVMCC cabinet.

IMPORTANT This does not apply to the Power Bus cutout. All holes around the Power Bus cutout must be used.

A minimum of four (4) retention points must be used. Access to the rear clearance holes may require the removal of the rear covers of both adjacent sections. If rear access is not available, the 3rd party supplier must be able to provide access from the front.

11. Reinstall all internal and external removable cover plates in their original factory locations before energy is applied to the main power bus.

ATTENTION: All arc resistant capabilities will be rendered ineffective if any cover plates are not properly reinstalled.

12. The mounting surface must be level and all sections must be secured to the floor using the vendor-defined floor mounting locations and methods.

ATTENTION: Failure to install the floor mounting hardware in the specified method and locations will result in arc gas leakage at the floor level. Refer to the installation manual for the specific controller type.

Figure 5 - ArcShield to 3rd Party Cabinet Securing Requirements

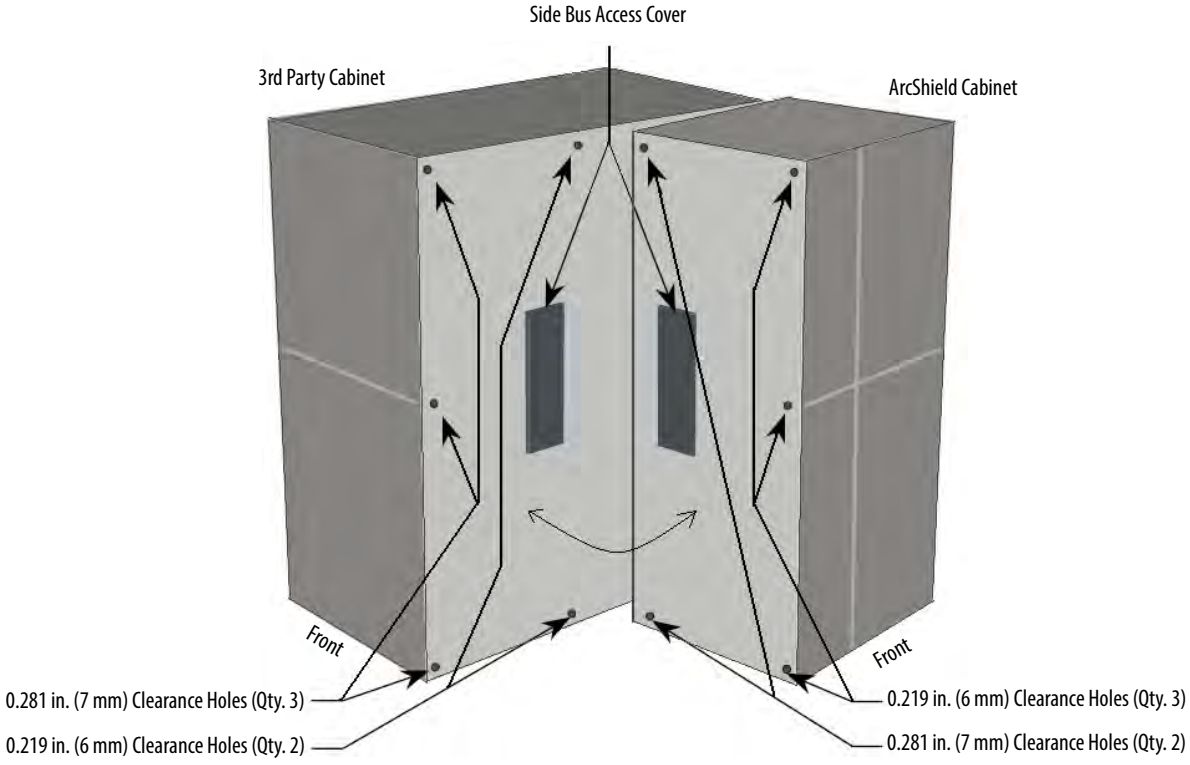

3rd Party Equipment Arc Gas Plenums

Overview

Each individual vertical section of the equipment normally includes an integral top-mounted pressure release system to facilitate a controlled upward release of the overpressures, smoke, and gasses created by an arc fault. A plenum or a chimney system controls this discharge in ArcShield MVMCC equipment.

The plenum or chimney systems direct hazardous flames and gases away from the top of the arc resistant enclosure. Unit plenums are secured to the top of the unit structure and to adjacent plenums, which creates a continuous conduit for release of the arc flash energy. Chimney systems direct the arc gases straight up into the open air environment.

If a Rockwell Automation chimney system is used, no other specific requirements to those of normal chimney installation requirements need be considered in relationship to the 3rd party equipment supplier. The system of gas release and control on the 3rd party equipment would be handled separately. See Additional Resources on page 10.

If an interconnected plenum system is required between the ArcShield and 3rd party equipment, the mechanical details surrounding the interconnection of plenum must be addressed by a full engineering review. An air tight adapter plate is needed to make the physical mechanical connection between the two plenum systems. The preferred system exhaust point must be from the largest plenum, as this release point will generally reduce the pressure wave more efficiently (see Figure 7 and Figure 8).

The plenum used for switchgear structures is generally larger than that of the plenum used on ArcShield MVMCC structures (Figure 6). In these cases, a direct connection to the plenums is possible if they are appropriately sealed and a full engineering review is completed.

The 3rd party supplier must produce an air tight interface to the ArcShield MVMCC plenum if the engineering review has determined interconnection of the plenums is approved.

Figure 6 - Typical ArcShield and 3rd Party Plenum Interconnection

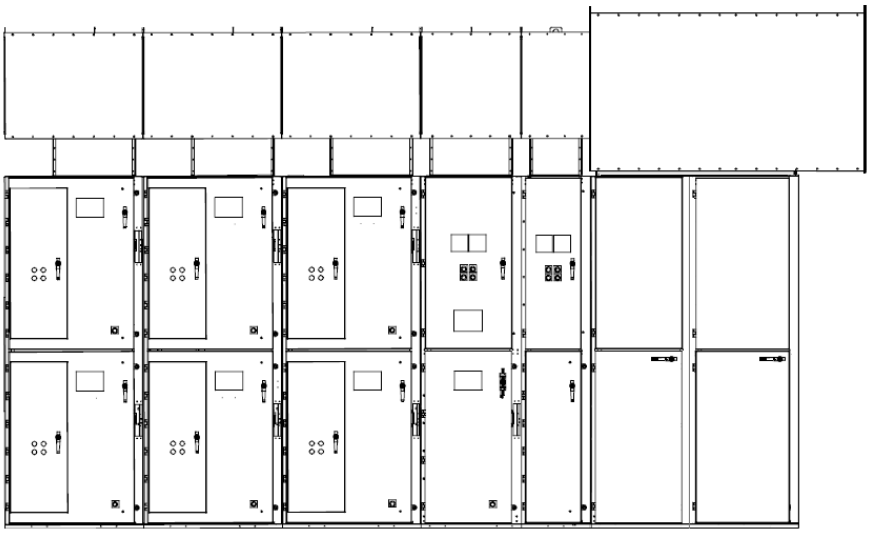

Figure 7 - ArcShield Plenum Interconnection (Left Side)

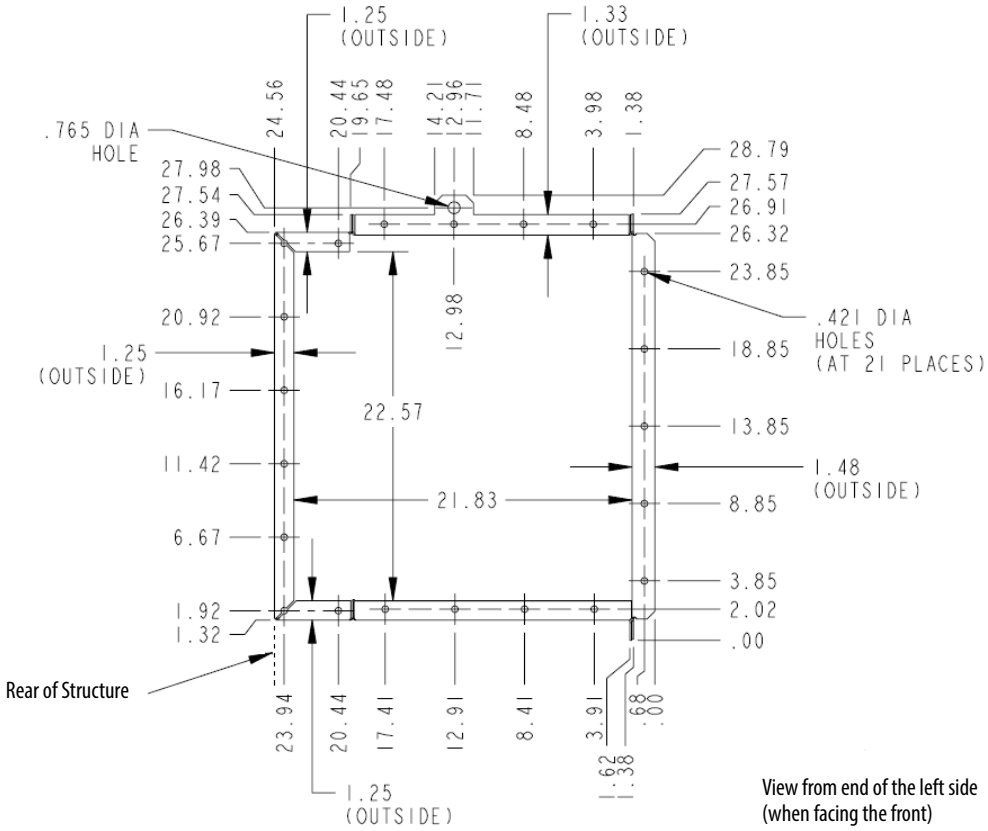

Figure 8 - ArcShield Plenum Interconnection (Right Side)

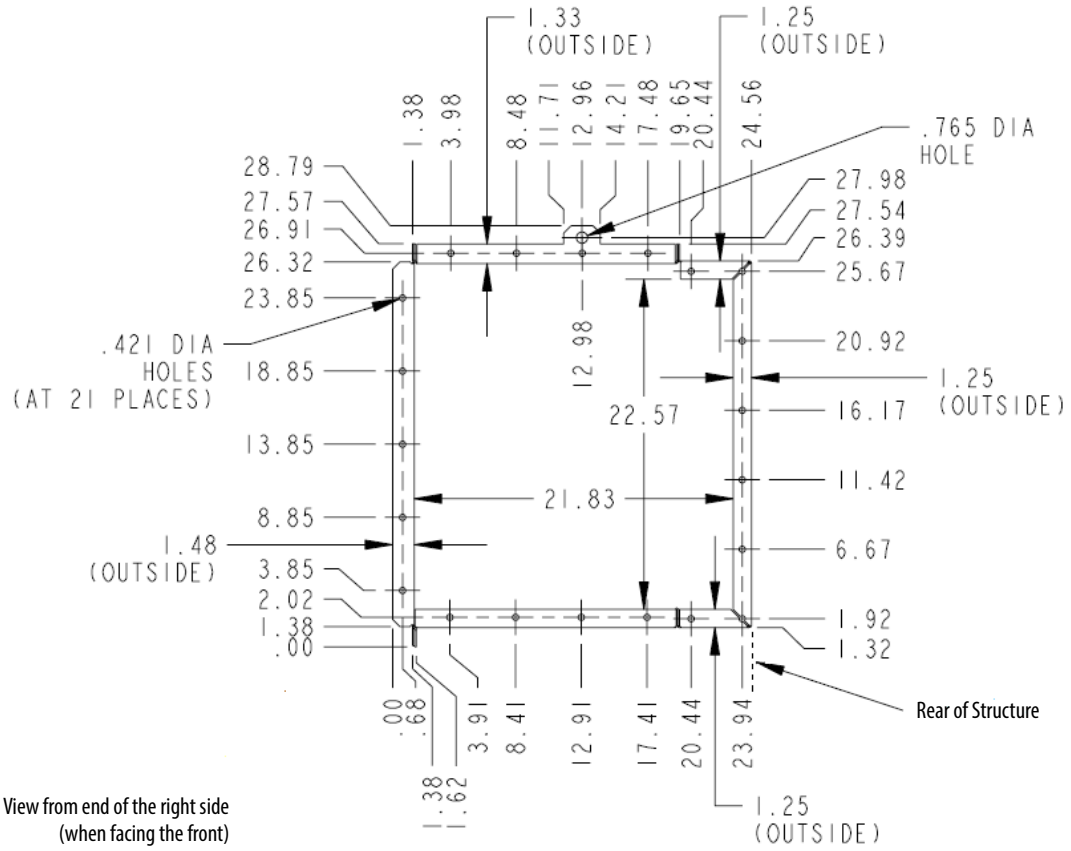

Plenum Duct Size and Materials

A plenum or chimney is provided for ArcShield MVMCC and is field-mounted on the top of the unit structure (except for incoming units if top line cable entry is required).

Each plenum based ArcShield line-up includes a plenum exhaust piece that extends beyond either the left or right ends of the line-up. If the ArcShield lineup is going to be aligned with a 3rd party piece of equipment, the exhaust point should be from the duct with the largest volume. Install an end cover on the other end of the plenums.

The cross-sectional area of any adjoining plenum duct system must be equal to or greater than the duct area provided on the ArcShield MVMCC equipment. In general, size the duct as if it was supporting 3000 CFM (5000 m^3/h) of air flow.

Pressure Drop

Any custom-built duct must not add excessive back pressure to the ArcShield plenum system. The pressure drop for steady-state air flow of 3000 CFM (5000 m^3/h) must be calculated taking duct material and geometry into consideration. The pressure drop through the additional ducting must not be greater than 0.12 in. H_2O (30 Pa) when calculated or measured for 3000 CFM (5000 m^3/h) air flow.

Duct Materials

Because of the high pressures developed during arc faults, steel is the recommended duct material. Rockwell Automation uses painted 12 gauge (2.6 mm) steel assembled with Grade 2 Hardware. Galvanized or painted steel (of the same or larger gauge) is acceptable.

Use appropriate gasket materials when contacting steel surfaces could allow arc gases to escape under high internal pressure. Fill small openings with silicone sealant type 108 RTC 82 or similar.

Duct Joints

Special attention is required for the design of the duct jointing points because of the high peak pressure during an arc incident. The duct joint must be designed to withstand a longitudinal force of 1000 lb (4400 N).

Duct Bracing

During an arc fault, additional ductwork is subjected to a brief high pressure shock wave. Any additional duct must be designed for severe dynamic loading, especially when selecting the supporting means and materials for the entire duct network.

Moisture and Condensation Factors

Extreme temperature differences in the immediate environment may cause condensation on the inside or outside of the ductwork. Wrap the duct assemblies with insulating material to reduce condensation effects. Exterior exhaust points must include environmental type seals, which limit air to air exchange within the plenum under normal operating conditions.

Additional Resources

These documents contain additional information concerning related products from Rockwell Automation.

Resource	Description
Publication 1500-UM055 -EN-P	Provides installation, maintenance, and general operating procedures for Medium Voltage Controllers, 200/400A Two-High Cabinet, Standard and Arc-Resistant Enclosure
Publication 1512A-UM100 -EN-P	Provides installation, maintenance, and general operating procedures for Medium Voltage Controllers, 400A One-High Cabinet, Standard and Arc-Resistant Enclosure
Publication 1512A-UM102 -EN-P	Provides installation, maintenance, and general operating procedures for Medium Voltage Controllers, 800A One-High Cabinet, Standard and Arc-Resistant Enclosure
Publication 1560E-UM051 -EN-P	Provides installation, commissioning, maintenance, and general operating procedures for Medium Voltage SMC™ Flex Motor Controllers, Bulletin 1503E, 1560E and 1562E
Product Certifications website, http://www.ab.com	Provides declarations of conformity, certificates, and other certification details.

You can view or download publications at http://www.rockwellautomation.com/literature/. To order paper copies of technical documentation, contact your local Allen-Bradley distributor or Rockwell Automation sales representative.

Figure 9 - ArcShield 36 in. Wide MVMCC Front and Side Views

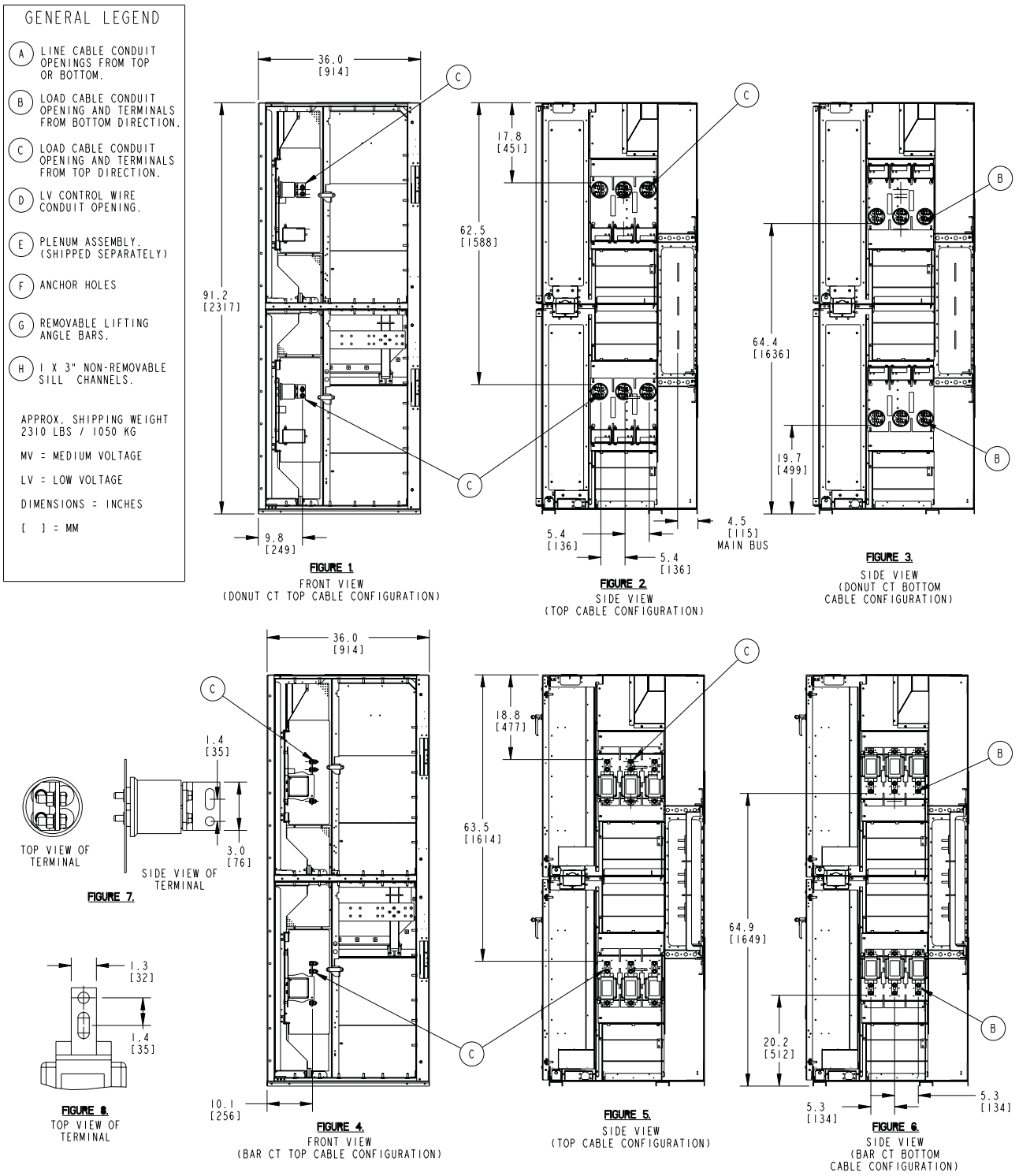

Figure 10 - Side and Angle View (36 in. Structure) showing Plenum

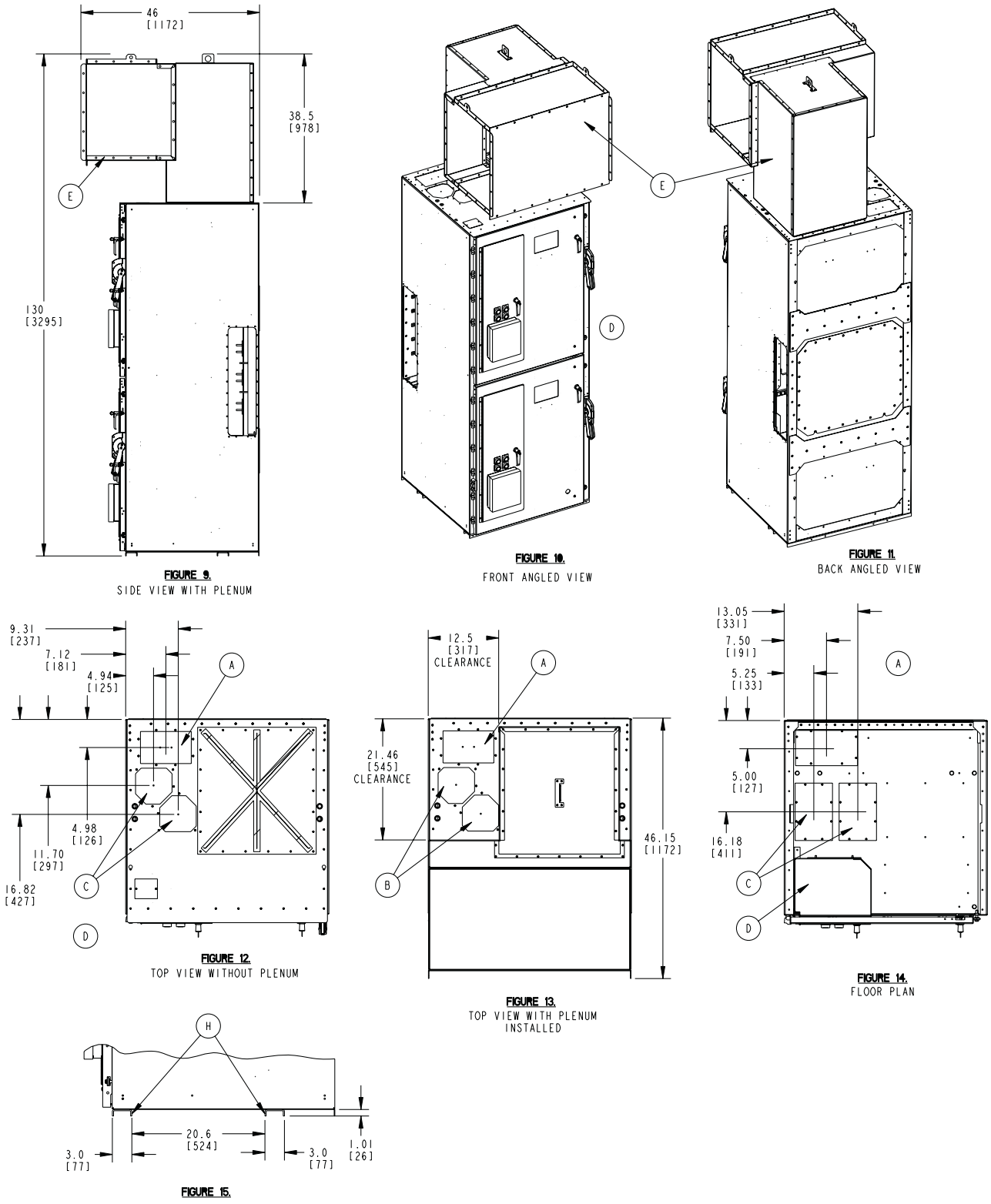

Figure 11 - 36 in. Wide Structure Power Bus Location and Bus Cutout

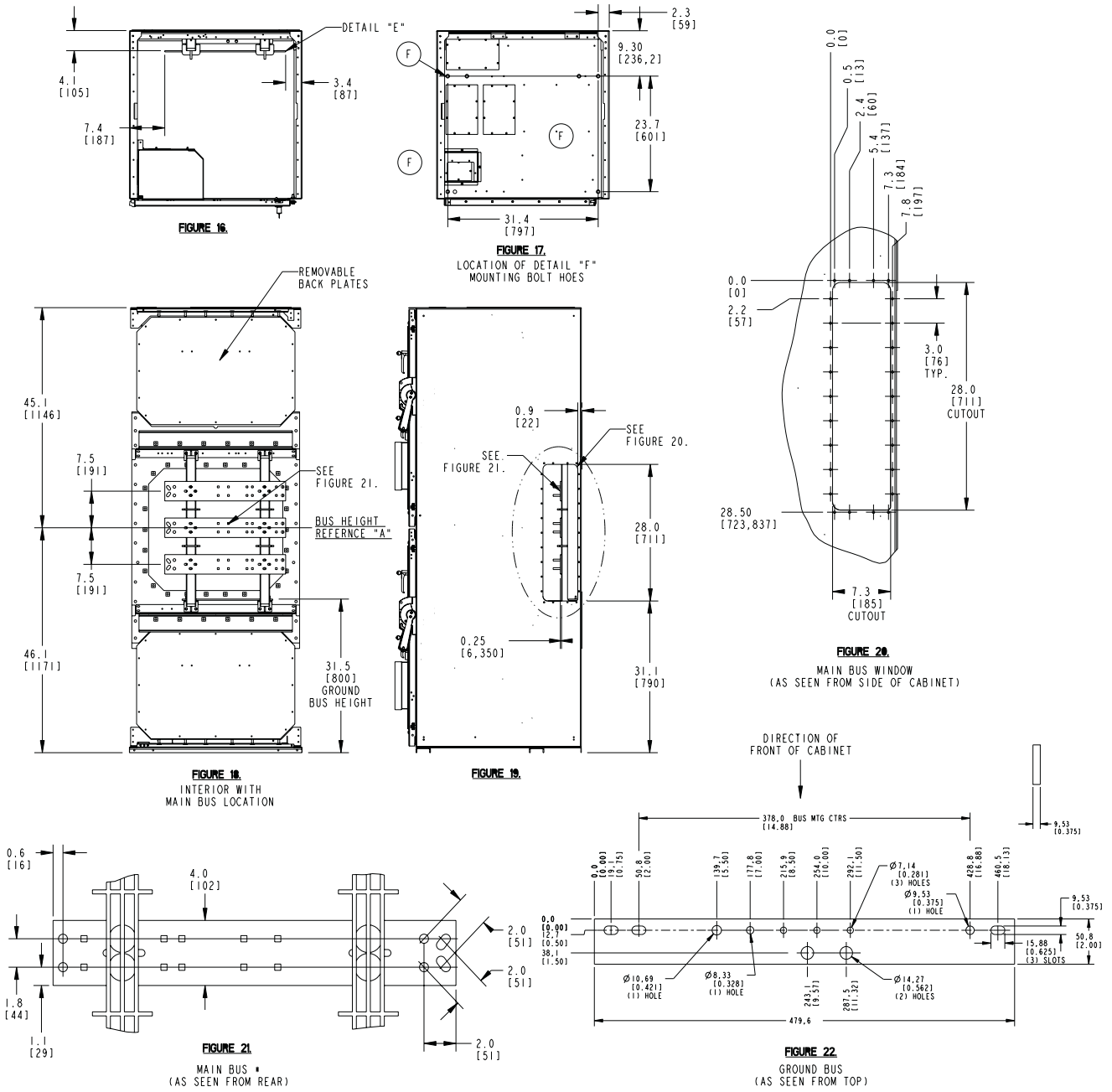

Figure 12 - 36 in. Wide Structure Power Bus Specifications

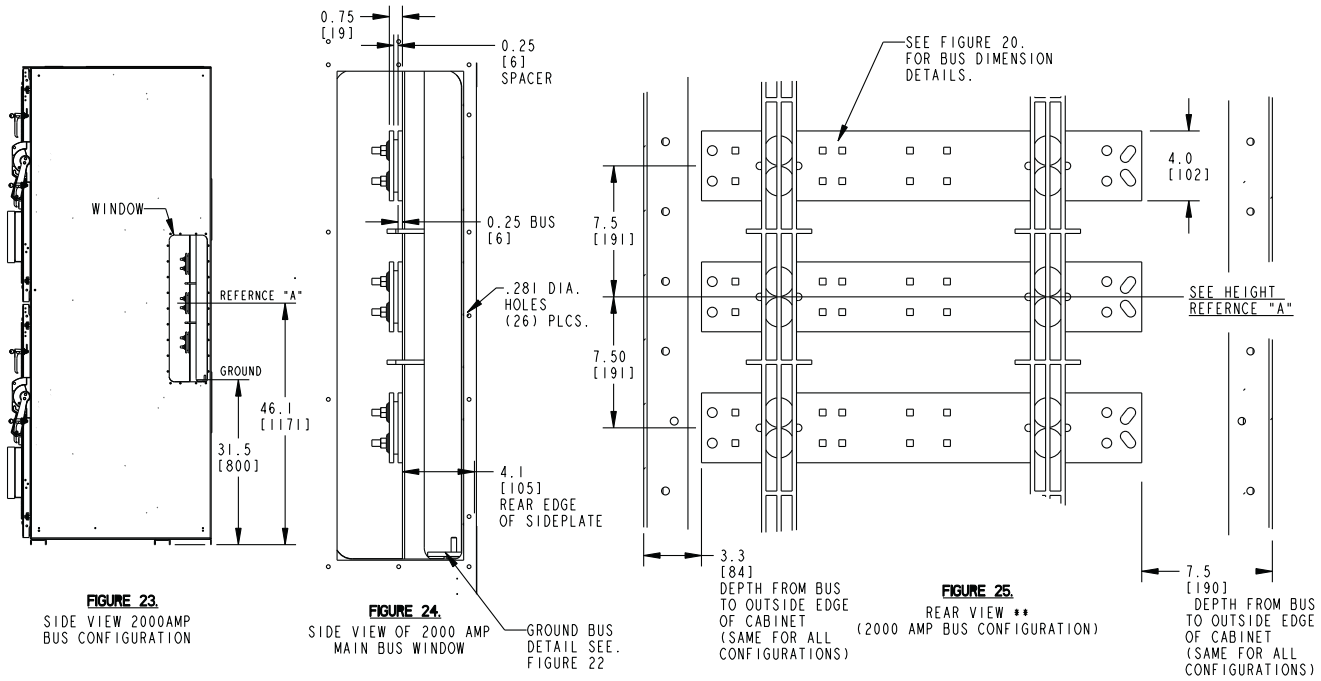

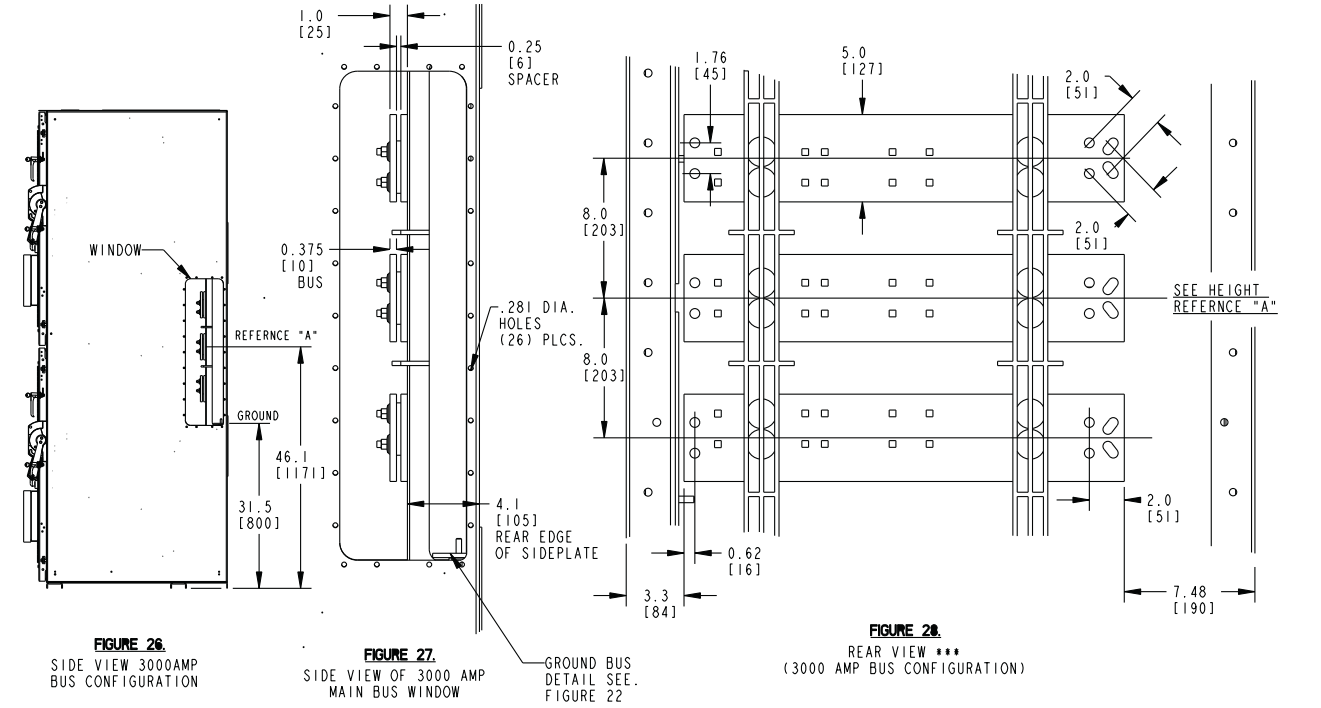

REFERNCE "A"

NOTE:

*1200 AMP USES SINGLE BUS .25 x 4.0"

**2000 AMP USES DOUBLE BUS .25 x 4.0"

***3000 AMP USES DOUBLE BUS .375 x 5.0"

Rockwell Automation Support

Rockwell Automation provides technical information on the Web to assist you in using its products. At http://www.rockwellautomation.com/support you can find technical and application notes, sample code, and links to software service packs. You can also visit our Support Center at https://rockwellautomation.custhelp.com/ for software updates, support chats and forums, technical information, FAQs, and to sign up for product notification updates.

In addition, we offer multiple support programs for installation, configuration, and troubleshooting. For more information, contact your local distributor or Rockwell Automation representative, or visit http://www.rockwellautomation.com/services/online-phone.

Installation Assistance

If you experience a problem within the first 24 hours of installation, review the information that is contained in this manual. You can contact Customer Support for initial help in getting your product up and running.

United States or Canada	1.440.646.3434
Outside United States or Canada	Use the Worldwide Locator at http://www.rockwellautomation.com/rockwellautomation/support/overview.page, or contact your local Rockwell Automation representative.

New Product Satisfaction Return

Rockwell Automation tests all of its products to help ensure that they are fully operational when shipped from the manufacturing facility. However, if your product is not functioning and needs to be returned, follow these procedures.

United States	Contact your distributor. You must provide a Customer Support case number (call the phone number above to obtain one) to your distributor to complete the return process.
Outside United States	Please contact your local Rockwell Automation representative for the return procedure.

Documentation Feedback

Your comments will help us serve your documentation needs better. If you have any suggestions on how to improve this document, complete this form, publication RA-DU002, available at http://www.rockwellautomation.com/literature/.

Medium Voltage Products, 135 Dundas Street, Cambridge, ON, N1R 5X1 Canada, Tel: (1) 519.740.4100, Fax: (1) 519.623.8930
Online: www.ab.com/mvb

www.rockwellautomation.com

Power, Control and Information Solutions Headquarters
Americas: Rockwell Automation, 1201 South Second Street, Milwaukee, WI 53204-2496 USA, Tel: (1) 414.382.2000, Fax: (1) 414.382.4444
Europe/Middle East/Africa: Rockwell Automation NV, Pegasus Park, De Kleetlaan 12a, 1831 Diegem, Belgium, Tel: (32) 2 663 0600, Fax: (32) 2 663 0640
Asia Pacific: Rockwell Automation, Level 14, Core F, Cyberport 3, 100 Cyberport Road, Hong Kong, Tel: (852) 2887 4788, Fax: (852) 2508 1846

Publication 1500-AT003A-EN-P - February 2015